113 Falso Drive - Syracuse, NY 13211 - USA
TEL: 315.455.2555 FAX: 315.455.2544 EMAIL: cryosales@cryomech.com

QUOTE NO: **0907290B Rev 1**
Dated: August 17, 2009

TO:	Steve Virostek Lawrence Berkeley Lab	FROM: TERMS:	Pat Delledera **Net 30 Days**

PHONE:	510.486.6271	SHIP DATE:	8 weeks after receipt of order
FAX:	[FAX]		
EMAIL:	spvirostek@lbl.gov	FOB:	(See Below)
REF:		VALID FOR:	90 Days

	DESCRIPTION				PART NUMBER	LIST PRICE
(1)	**AL330 Cryorefrigerator**					**$ 40,625.00**
	1-AL330 Cold Head				CH10330	
(1)	**Bellow Assembly**				**BA65-14**	**$ 2,320.00**
	1 - CP970 Compressor Package (Please choose one of the following models)					
	Water Cooled: (Please select electrical configuration)					
	220/230VAC; 3 Phase; 60 Hertz				CP0907W1BC	
	460VAC; 3 Phase; 60 Hertz				CP0907W1BD	
	OR					
	Air Cooled Option: ADD $4,150 to System Price					
	(Please select electrical configuration)					
	220/230VAC; 3 Phase; 60 Hertz				CP0907A1BC	
	460VAC; 3 Phase; 60 Hertz				CP0907A1BD	
	3 - Spare Air Filters included					
	2 - Stainless Steel Flexible Lines					
	1/2" Aeroquip to 3/4" Aeroquip, 1/2" ID Line	Length =	**10**	**FT**	FL-081208- **10**	
	3/4" Aeroquip both ends, 3/4" ID Line	Length =	**10**	**FT**	FL-121212- **10**	
	1 - Cold Head Motor Cord	Length =	**10**	**FT**	MC-6808- **10**	
	1 - Installation and Operation Manual				IMC014	
	1 - Installation Tool Kit				ITK003	
					Total Cost of Goods	$ 42,945.00
					Plus: pkg/handling	$ 500.00
					Total ExWorks Syracuse, NY	$ 43,445.00

ORDER INSTRUCTIONS

Please write the above QUOTE NUMBER on your written order.
Please email order to: cryosales@cryomech.com AND Fax to: 315-455-2544.

Quotation is not valid if the system is for resale to another address.
Please notify Cryomech of your intention to resell for a valid quotation.

Pat Delledera
Customer Service Specialist

July 29, 2009

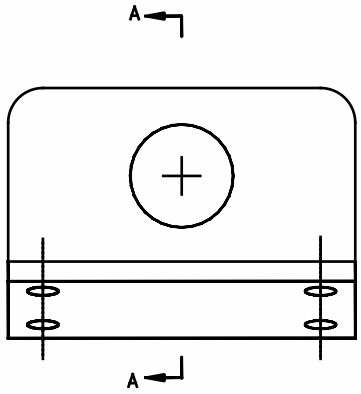

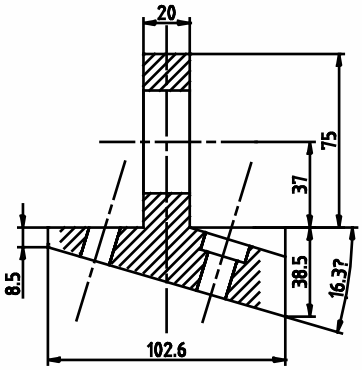

A-A SECTION

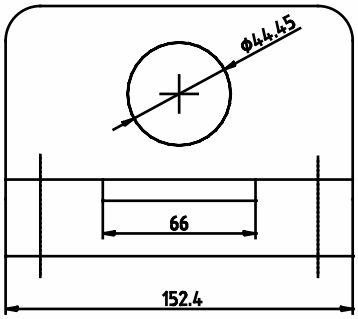

NOTES:
1) DIMENSIONS ARE IN mm
2) MATERIAL IS 316 S.S.
3) QTY. 8

THIRD ANGLE PROJECTION	WANG NMR INC 550 N CANYONS PARKWAY, LIVERMORE, CA 94550		
NAME: COLD MASS SUPPORT BRACKET			
DWG #: MICE – C007B		SHT 1 OF 1	
MATERIAL:		QTY	16
DWN BY: XU	DATE: DEC 10,2003	SCALE: TO FIT	DWG SIZE:
1ST CHK:	DATE:	2ND CHK:	DATE:

ALL DIMENSIONS ARE IN mm
TOLERANCES: DECIMALS XXX=±.005 XX=±.01 X=±.1
ANGLES ±.5°
CONCENTRICITY ±.1 TOTAL INDICATION RUN OUT
PERPENDICULAR ±.05 (UNLESS OTHERWISE SPECIFIED)

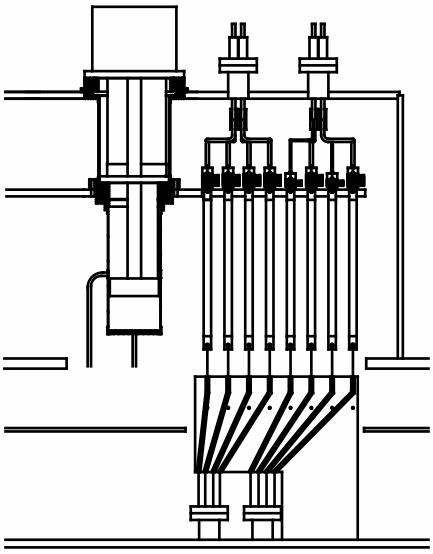

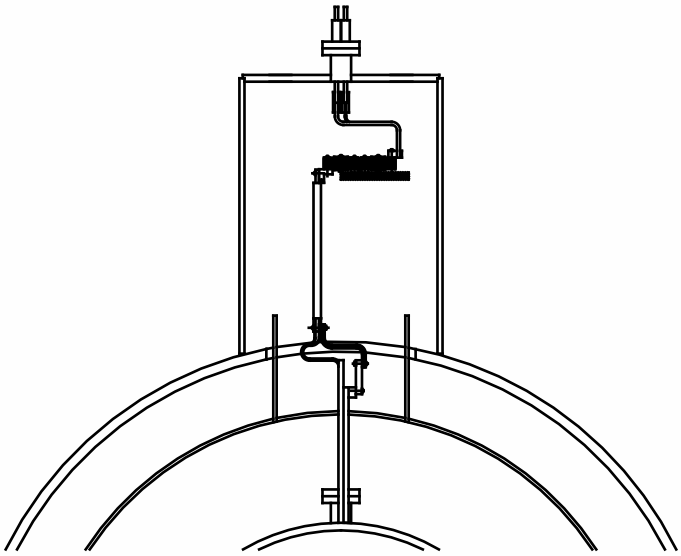

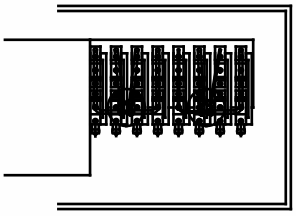

Each Copper Wire Length=300mm

ALL DIMENSIONS ARE IN mm

THIRD ANGLE PROJECTION	WANG NMR INC 550 N CANYONS PARKWAY, LIVERMORE, CA 94550		
NAME: MICE TRACKER MODULE 4.5T TRACKER SOLENOID MAGNET			
DWG #: S000B		SHT 1 OF 1	
MATERIAL:		QTY	
DWN BY: XU	DATE: NOV 13,2007	SCALE: TO FIT	DWG SIZE:
1ST CHK:	DATE:	2ND CHK:	DATE:

BA65-14 | REV A

ALL INFORMATION CONTAINED IN THIS DOCUMENT SHOULD BE USED FOR REFERENCE PURPOSES ONLY & ARE SUBJECT TO CHANGE WITHOUT PRIOR NOTIFICATION. ALSO, THIS DOCUMENT IS CONSIDERED PROPRIETARY & THE SOLE PROPERTY OF CRYOMECH, INC. & SHOULD NOT BE REPRODUCED IN ANY MANNER WITHOUT PRIOR WRITTEN APPROVAL.

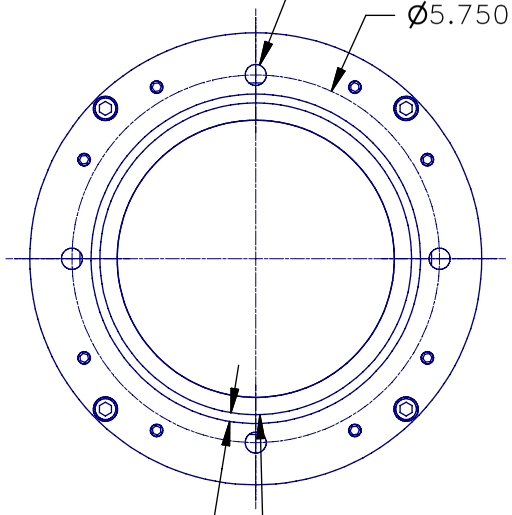

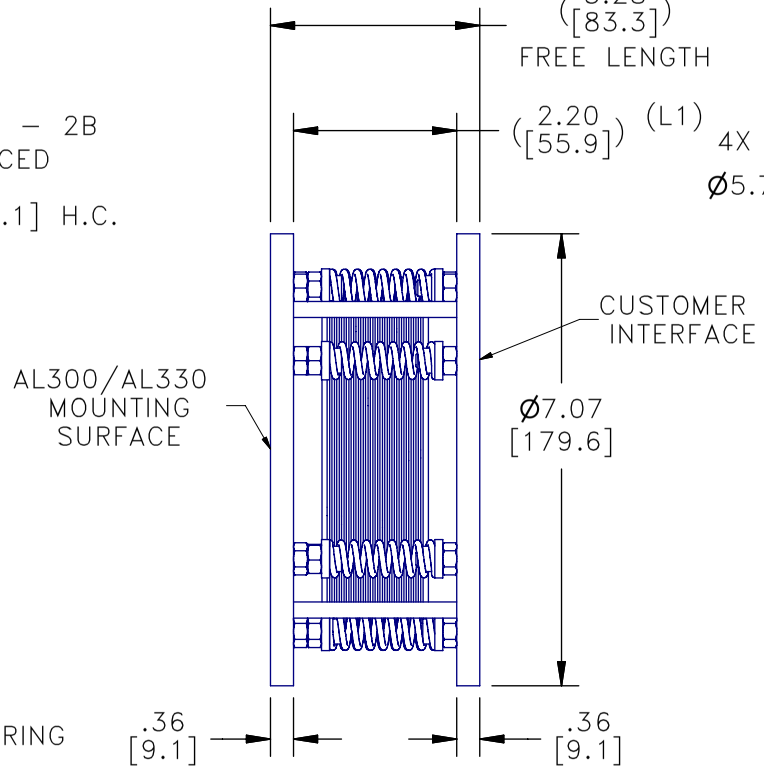

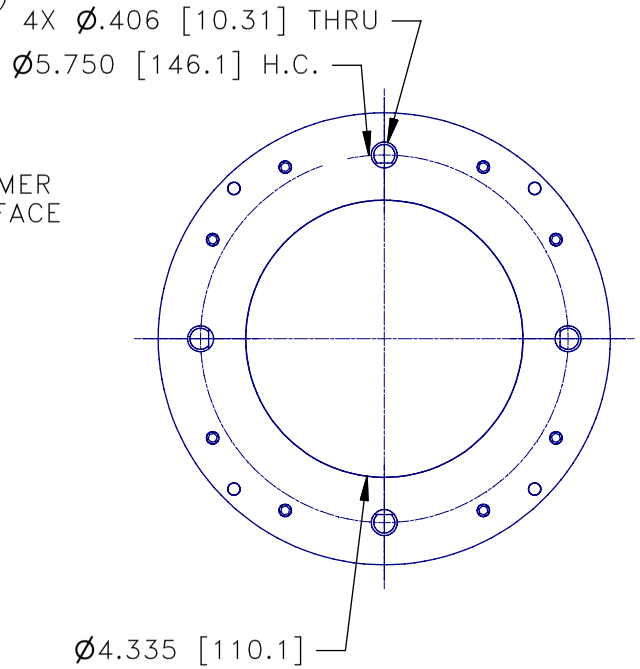

AL300/330 BELLOWS	
PROPERTY	VALUE
FREE LENGTH	3.28 in.
LENGTH (L1) @ P	2.20 in.
LOAD (P)	330 lb.
SPRING RATE	934 lb./in

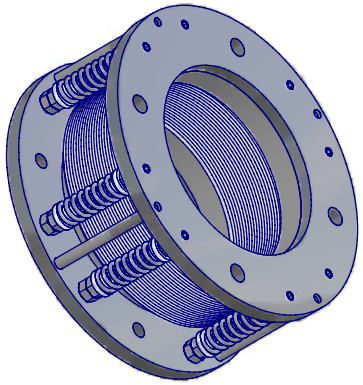

THIRD ANGLE PROJECTION

CRYOMECH, INC
113 FALSO DRIVE SYRACUSE, N.Y. 13211
Tel: (315)455-2555 Fax:(315)455-2544

ALL DIMENSIONS ARE IN INCHES
TOLERANCES: FRACTIONS ±1/64 DECIMALS XXX=±.005 XX =±.01
ANGLES ±.5° ALLOVER FINISH 25 Ra
CONCENTRICITY .005 TOTAL INDICATOR RUN OUT
PERPENDICULAR ±.002 (UNLESS OTHERWISE SPECIFIED)

NAME: AL300 SERIES BELLOWS
DWG #: BA65-14 SHT 1 OF 1
MATERIAL: 65-14
DWN BY: WAG DATE: 30MAR07 SCALE: 1:3 DWG SIZE: A
1ST CHK: AO DATE: 7/23/07 2ND CHK: - DATE: -
CUST: BTA:

ECN	ZONE	REV	DESCRIPTION	DATE
1562	–	A	Ø7.070 WAS Ø7.500	18MAR08
1361	–	–	INITIAL RELEASE	09MAY07

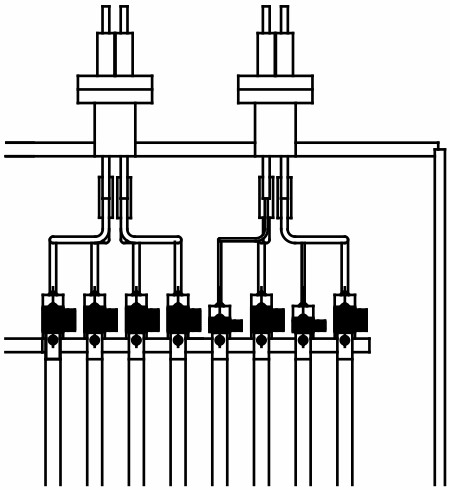

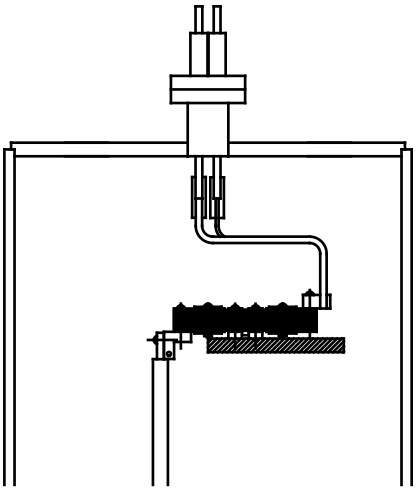

Wire #4 Cable Length = 11" MAGNET

ALL DIMENSIONS ARE IN mm

THIRD ANGLE PROJECTION	WANG NMR INC 550 N CANYONS PARKWAY, LIVERMORE, CA 94551		
NAME: MICE TRACKER MODULE 4.5T TRACKER SOLENOID			
DWG #: S000C		SHT 1 OF 1	
MATERIAL:		QTY	
DWN BY: XU	DATE: NOV 13,2007	SCALE: TO FIT	DWG SIZE:
1ST CHK:	DATE:	2ND CHK:	DATE:

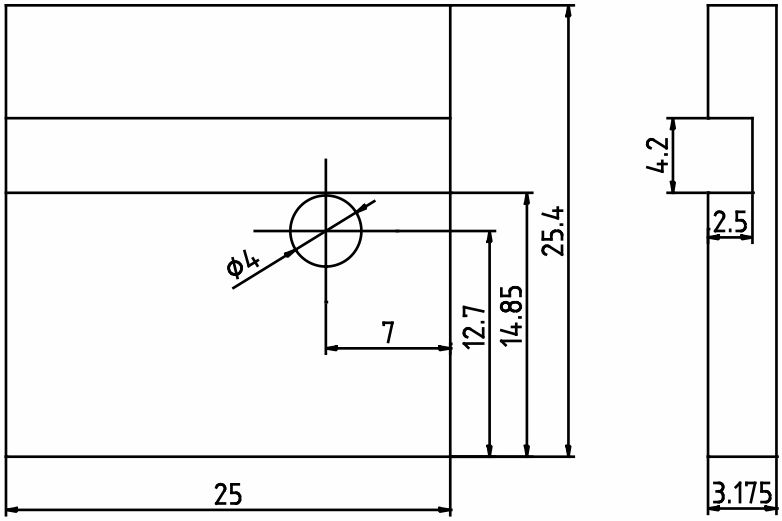

ALL DIMENSIONS ARE IN mm

THIRD ANGLE PROJECTION	WANG NMR INC 550 N CANYONS PARKWAY, LIVERMORE, CA 94550		
NAME: S001B			
DWG #: S001B		SHT 1 OF 1	
MATERIAL: OFHC		QTY	16
DWN BY: XU	DATE: NOV 21,2007	SCALE: TO FIT	DWG SIZE:
1ST CHK:	DATE:	2ND CHK:	DATE:

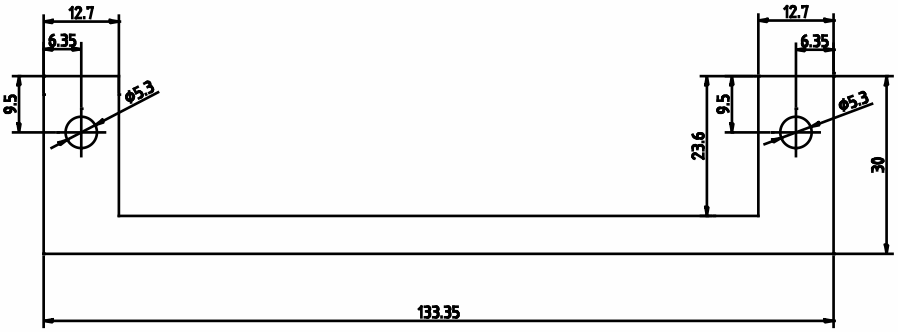

ALL DIMENSIONS ARE IN mm
MATERIAL IS 0.8mm THICK OFHC
QTY=70

THIRD ANGLE PROJECTION	WANG NMR INC 550 N CANYONS PARKWAY, LIVERMORE, CA 94550		
NAME: S002B			
DWG #: S002B		SHT 1 OF 1	
MATERIAL: OFHC		QTY	140 / 2
DWN BY: XU	DATE: NOV 27,2007	SCALE: TO FIT	DWG SIZE:
1ST CHK:	DATE:	2ND CHK:	DATE:

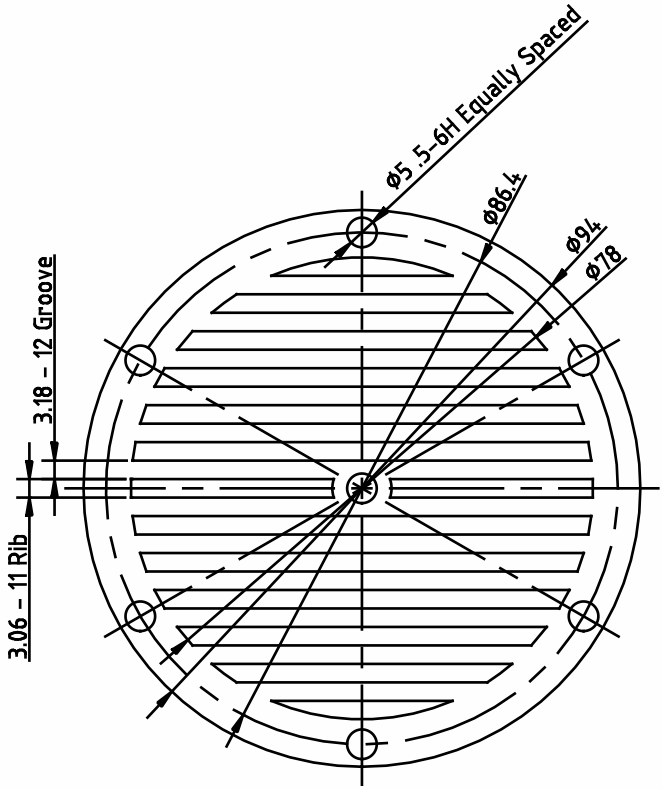

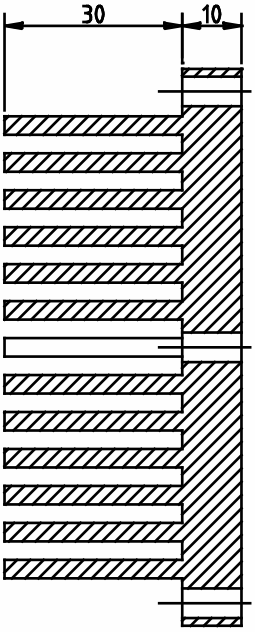

ALL DIMENSIONS ARE IN mm

THIRD ANGLE PROJECTION	WANG NMR INC 550 N CANYONS PARKWAY, LIVERMORE, CA 94550		
NAME: Cryocooler 4K Condenser			
DWG #: C001		SHT 1 OF 1	
MATERIAL: OFHC		QTY	4
DWN BY: XU	DATE: Sept 30, 2009	SCALE: TO FIT	DWG SIZE:
1ST CHK:	DATE:	2ND CHK:	DATE:

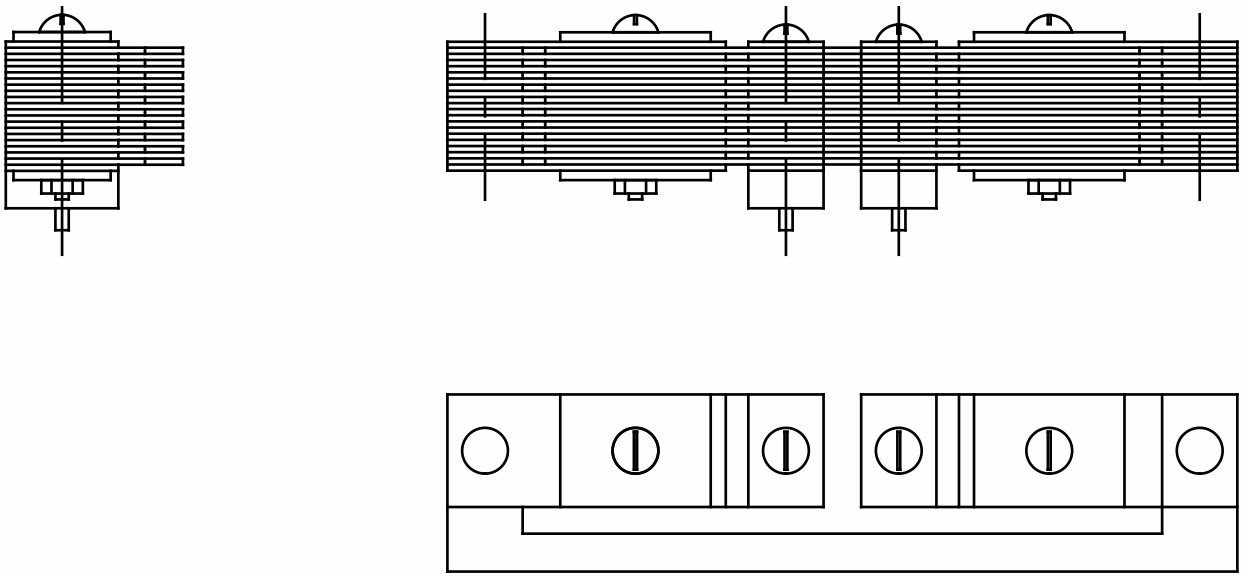

THIRD ANGLE PROJECTION	WANG NMR INC 550 N CANYONS PARKWAY, LIVERMORE, CA 94550		
NAME: S003A			
DWG #: S00A		SHT 1 OF 1	
MATERIAL: OFHC		QTY	
DWN BY: XU	DATE: NOV 27,2007	SCALE: TO FIT	DWG SIZE:
1ST CHK:	DATE:	2ND CHK:	DATE:

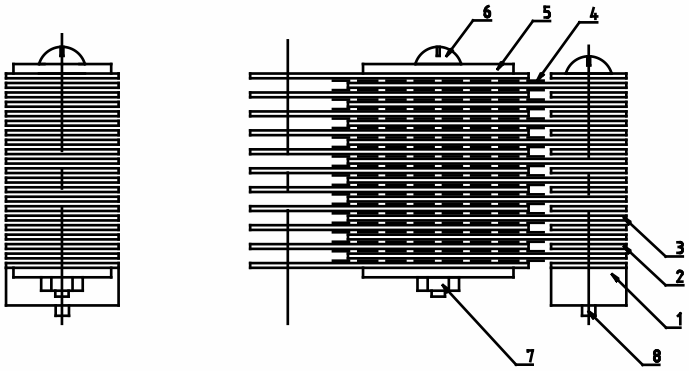

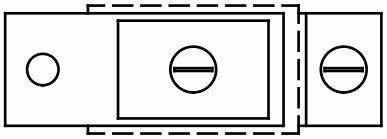

ITEM	QTY	PART #	DESCRIPTION
8	16		SCREW 8–32
7	16		NUT 6–32
6	16		SCREW 6–32
5	32	S003B–5	PLATE
4	280	S003B–4	INSULATION
3	296	S003B–3	LEAF
2	156	S003B–2	SPACER
1	16	S003B–1	BASE

PART LIST

THIRD ANGLE PROJECTION

WANG NMR INC

550 N CANYONS PARKWAY, LIVERMORE, CA 94550

NAME: S003B

DWG #: S003B | SHT 1 OF 1

MATERIAL: OFHC | QTY 16

DWN BY: XU DATE: NOV 27,2007 | SCALE: TO FIT | DWG SIZE:

1ST CHK: DATE: | 2ND CHK: DATE:

NOTE:
QTY=16 (4 EACH HAVE ONLY FIVE LAYER)

ALL DIMENSIONS ARE IN mm

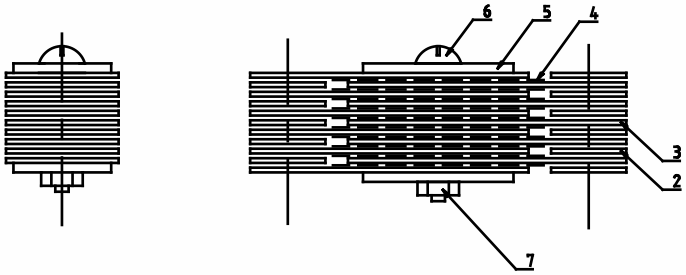

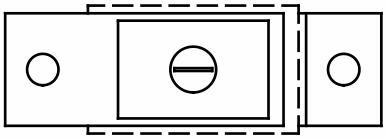

ITEM	QTY	PART #	DESCRIPTION
7	8		NUT 6-32
6	8		SCREW 6-32
5	16	S003B-5	PLATE
4	64	S003B-4	INSULATION
3	72	S003B-3	LEAF
2	68	S003B-2	SPACER

PART LIST

THIRD ANGLE PROJECTION

WANG NMR INC

550 N CANYONS PARKWAY, LIVERMORE, CA 94550

NAME: S003B

DWG #: S003C | SHT 1 OF 1

MATERIAL: OFHC | QTY 32 / 2

DWN BY: XU DATE: NOV 27,2007 | SCALE: TO FIT | DWG SIZE:

1ST CHK: DATE: | 2ND CHK: DATE:

NOTE:
QTY=8 (2 EACH HAVE ONLY ONE LAYER)

ALL DIMENSIONS ARE IN mm

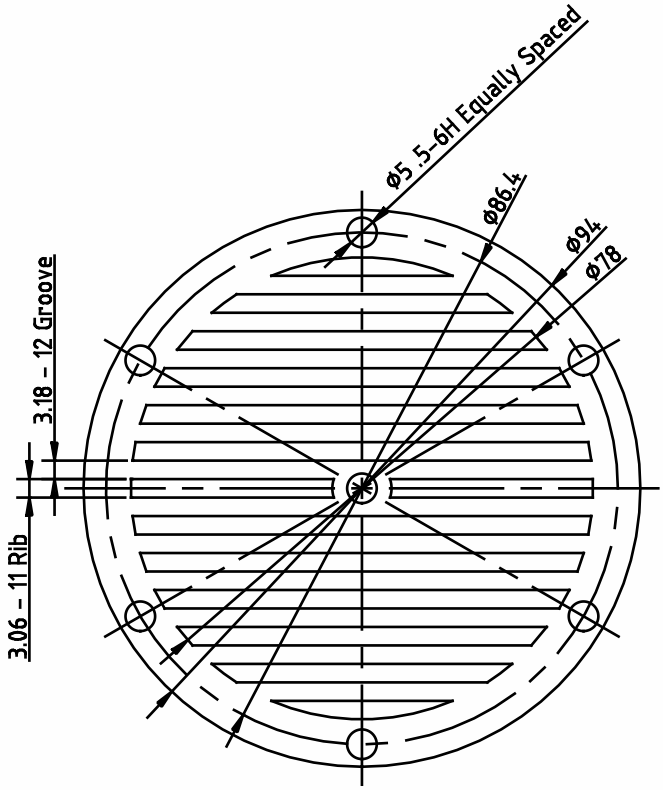

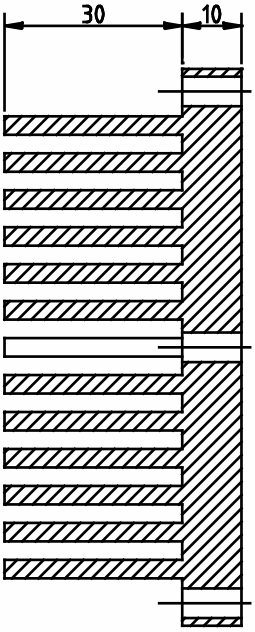

ALL DIMENSIONS ARE IN mm

THIRD ANGLE PROJECTION	WANG NMR INC 550 N CANYONS PARKWAY, LIVERMORE, CA 94550		
NAME: Cryocooler 4K Condenser			
DWG #: C001		SHT 1 OF 1	
MATERIAL: OFHC		QTY	4
DWN BY: XU	DATE: Sept 30, 2009	SCALE: TO FIT	DWG SIZE:
1ST CHK:	DATE:	2ND CHK:	DATE:

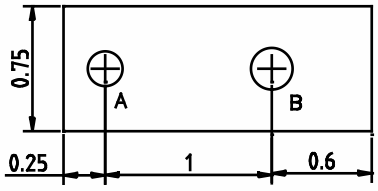

ITEM #3 LEAF
MATERIAL=COPPER 0.04 THK
HOLE 'A'=0.209
HOLE 'B'=0.25
QTY=296

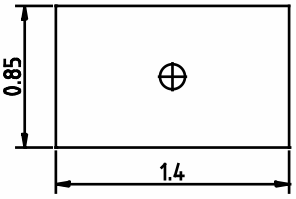

ITEM #4 INSULATION
MATERIAL=KAPTON 0.002 THK
HOLE=0.15
QTY=280

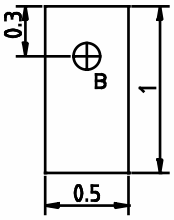

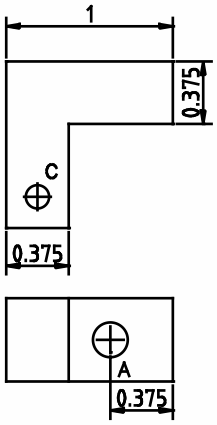

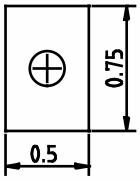

ITEM #2 SPACER
MATERIAL=COPPER 0.04 THK
HOLE=0.209
QTY=156

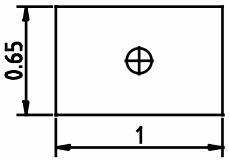

ITEM #5 PLATE
MATERIAL=304 S.S 0.062 THK
HOLE=0.15
QTY=32

ITEM #9 TERMINAL
MATERIAL= COPPER 1/2" X 1" X 1"
HOLE 'A' = 0.209 THRU
HOLE 'B' = TAP 6-32 X 0.5 DEEP
HOLE 'C' = TAP 6-32 THRU
QTY=8

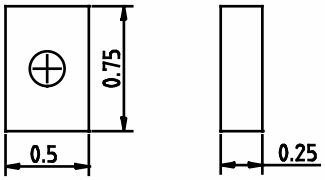

ITEM #1 BASE
MATERIAL=COPPER 1/4 X 1/2 X 3/4
HOLE=0.209
QTY=16

ALL DIMENSIONS ARE IN INCHES

THIRD ANGLE PROJECTION	WANG NMR INC 550 N CANYONS PARKWAY, LIVERMORE, CA 94550	
NAME: HTC LEAD MTG DETAIL PARTS		
DWG #: S-004B	SHT 1 OF 1	
MATERIAL:	QTY	
DWN BY: XU DATE: DEC 3,2003	SCALE: TO FIT	DWG SIZE:
1ST CHK: DATE:	2ND CHK: DATE:	

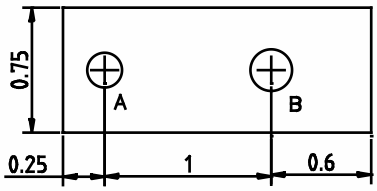

ITEM #3 LEAF
MATERIAL=COPPER 0.04 THK
HOLE 'A'=0.209
HOLE 'B'=0.25
QTY=72

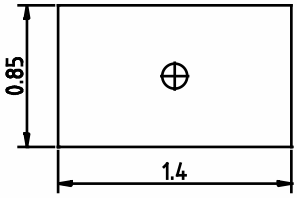

ITEM #4 INSULATION
MATERIAL=KAPTON 0.002 THK
HOLE=0.15
QTY=64

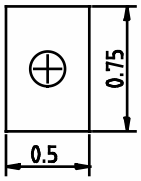

ITEM #2 SPACER
MATERIAL=COPPER 0.04 THK
HOLE=0.209
QTY=68

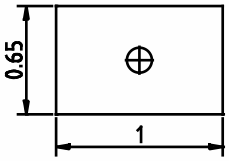

ITEM #5 PLATE
MATERIAL=304 S.S 0.062 THK
HOLE=0.15
QTY=16

ALL DIMENSIONS ARE IN INCHES

THIRD ANGLE PROJECTION	WANG NMR INC 550 N CANYONS PARKWAY, LIVERMORE, CA 94550		
NAME: HTC LEAD MTG DETAIL PARTS			
DWG #: S-004C		SHT 1 OF 1	
MATERIAL:		QTY	
DWN BY: XU	DATE: DEC 3,2003	SCALE: TO FIT	DWG SIZE:
1ST CHK:	DATE:	2ND CHK:	DATE:

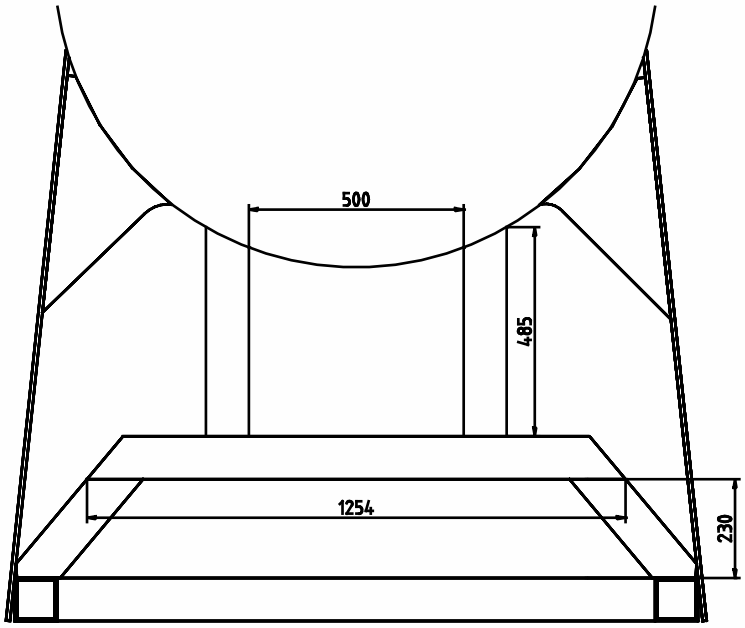

ALL DIMENSIONS ARE IN mm

THIRD ANGLE PROJECTION	WANG NMR INC 550 N CANYONS PARKWAY, LIVERMORE, CA 94551		
NAME: MICE LEG MODIFICATION			
DWG #: MICE-F000B-01		SHT 1 OF 1	
MATERIAL: 304 S.S.		QTY	
DWN BY: XU DATE: OCT.16,2008	SCALE: TO FIT	DWG SIZE:	
1ST CHK: DATE:	2ND CHK: DATE:		

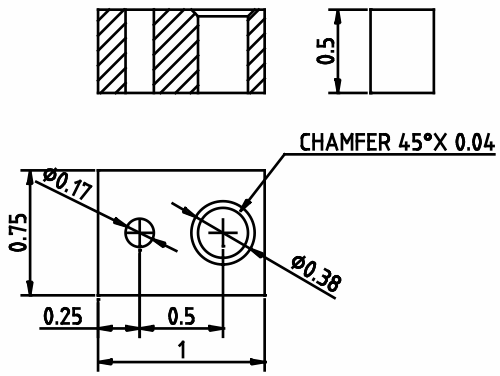

ITEM #10 CABLE LUG
MATERIAL= COPPER 1/2" X 3/4"
X 1"
QTY=8

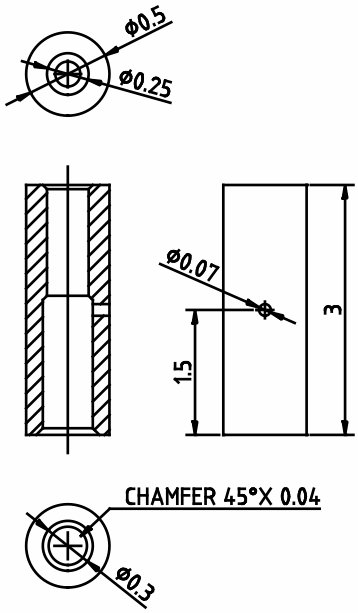

ITEM #11 CABLE ADAPTOR
MATERIAL= COPPER 1/2"OD X
1.5"
QTY=8

ALL DIMENSIONS ARE IN INCHES

THIRD ANGLE PROJECTION	WANG NMR INC 550 N CANYONS PARKWAY, LIVERMORE, CA 94550	
NAME: CABLE PARTS		
DWG #: S-005B	SHT 1 OF 1	
MATERIAL:	QTY	
DWN BY: XU DATE: DEC 5,2003	SCALE: TO FIT	DWG SIZE:
1ST CHK: DATE:	2ND CHK: DATE:	

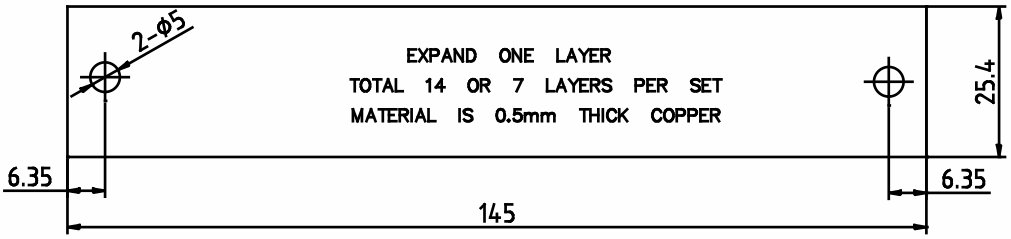

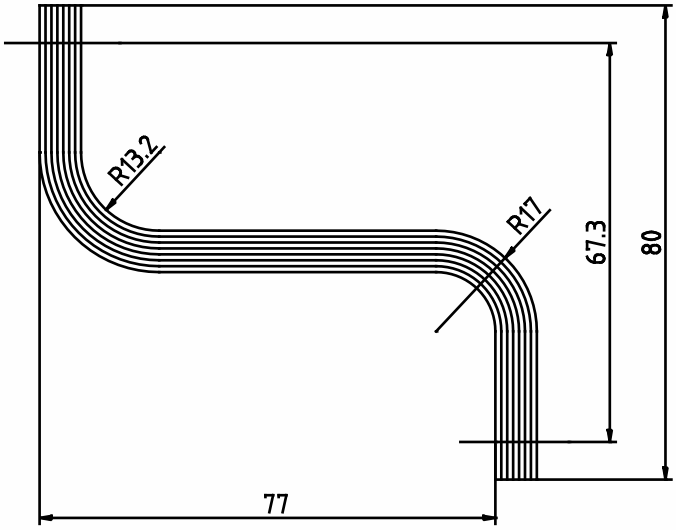

14 Layers QTY=6
7 Layers QTY=2

ALL DIMENSIONS ARE IN mm

THIRD ANGLE PROJECTION	WANG NMR INC 550 N CANYONS PARKWAY, LIVERMORE, CA 94550		
NAME: S006B			
DWG #: S006B		SHT 1 OF 1	
MATERIAL: OFHC		QTY	6 / 2
DWN BY: XU	DATE: DEC 6,2003	SCALE: TO FIT	DWG SIZE:
1ST CHK:	DATE:	2ND CHK:	DATE:

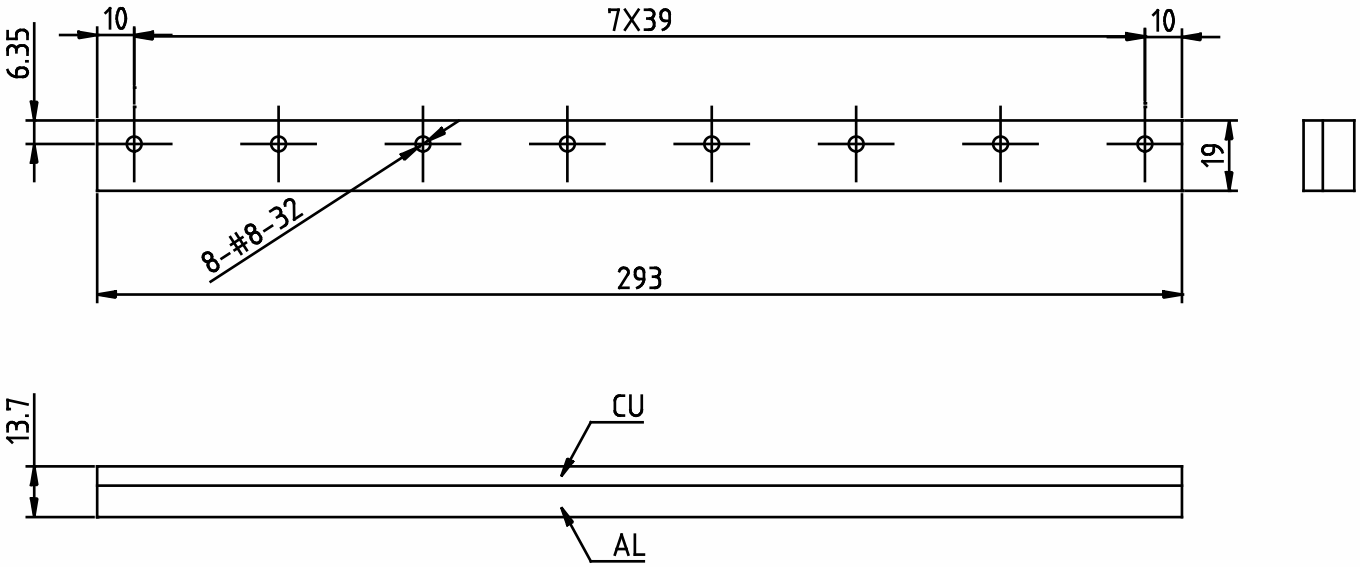

ALL DIMENSIONS ARE IN mm

THIRD ANGLE PROJECTION	WANG NMR INC 550 N CANYONS PARKWAY, LIVERMORE, CA 94550		
NAME: S007B			
DWG #: S007B		SHT 1 OF 1	
MATERIAL: CU/AL		QTY	1
DWN BY: XU	DATE: DEC 6,2003	SCALE: TO FIT	DWG SIZE:
1ST CHK:	DATE:	2ND CHK:	DATE:

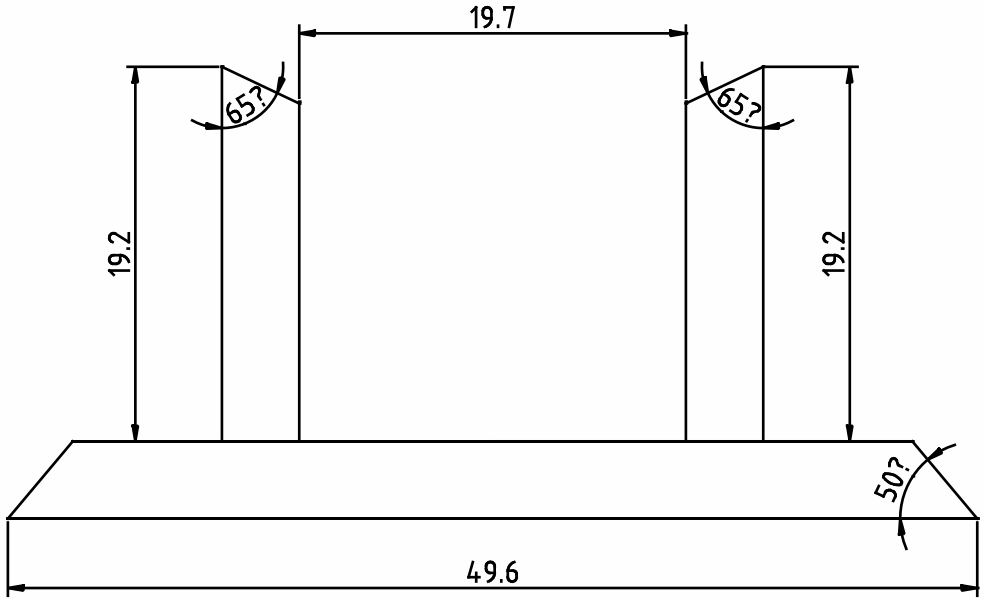

NOTE:
1) ALL DIMENSIONS ARE IN mm
2) MATERIAL IS 4"X4" 3/16"Wall S.S.304 Square Tube
Total Length 30Ft For 4 Leg

THIRD ANGLE PROJECTION	WANG NMR INC 550 N CANYONS PARKWAY, LIVERMORE, CA 94551		
NAME: MICE LEG MODIFICATION			
DWG #: MICE-F000B-02		SHT 1 OF 1	
MATERIAL: 304 S.S.		QTY	4
DWN BY: XU	DATE: OCT.16,2008	SCALE: TO FIT	DWG SIZE:
1ST CHK: DATE:		2ND CHK: DATE:	

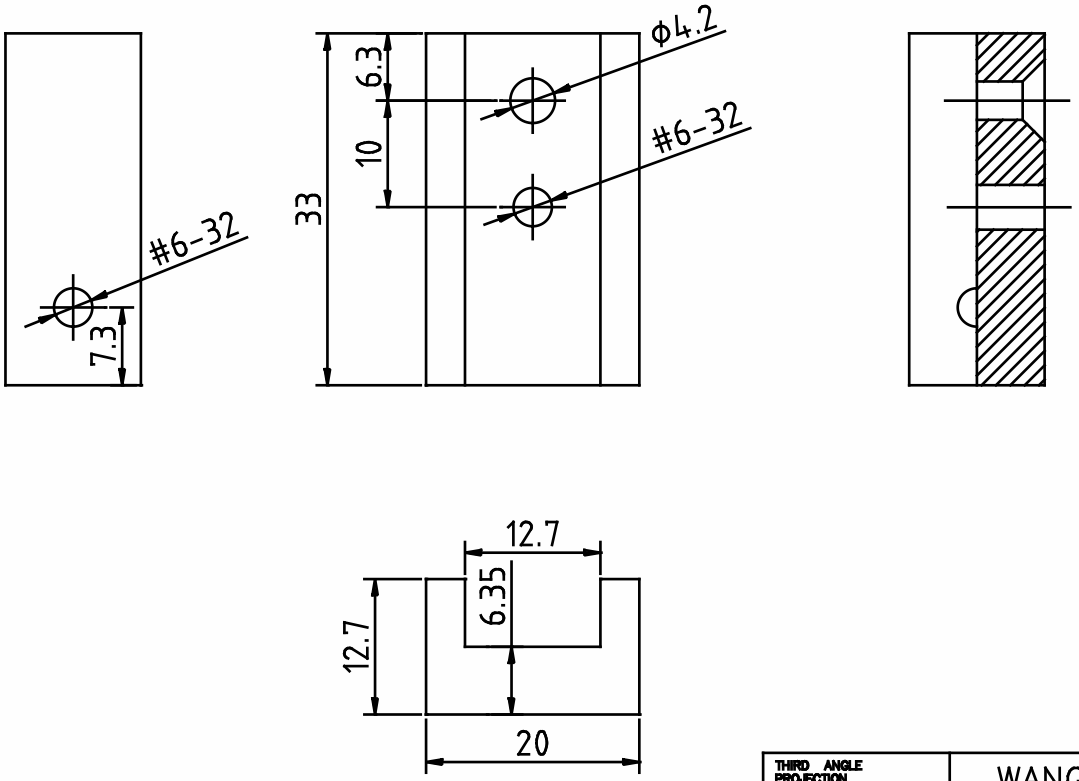

ALL DIMENSIONS ARE IN mm

THIRD ANGLE PROJECTION	WANG NMR INC 550 N CANYONS PARKWAY, LIVERMORE, CA 94550		
NAME: MICE TRACKER MODULE 4.5T TRACKER SOLENOID MAGNET			
DWG #: S008B		SHT 1 OF 1	
MATERIAL:		QTY	
DWN BY: XU DATE: APR 22,2008		SCALE: TO FIT	DWG SIZE:
1ST CHK: DATE:		2ND CHK: DATE:	

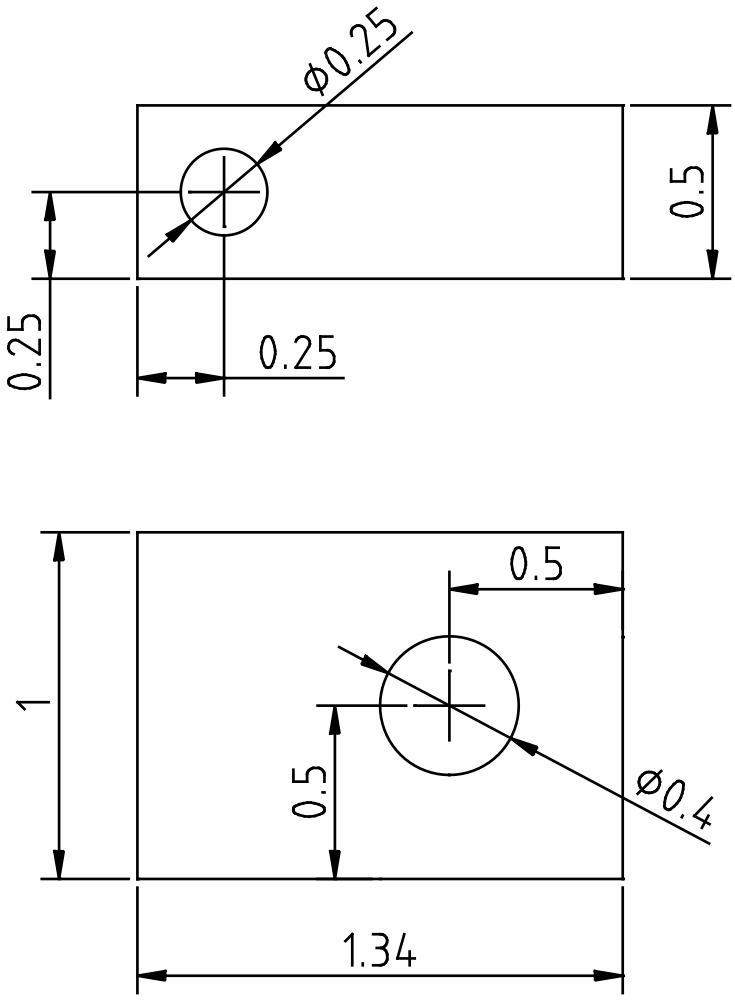

ALL DIMENSIONS ARE IN INCHES

THIRD ANGLE PROJECTION	WANG NMR INC		
NAME: CABLE PARTS			
DWG #: S-009B		SHT 1 OF 1	
MATERIAL: OFHC		QTY	8
DWN BY: XU	DATE: MAY 22,2008	SCALE: TO FIT	DWG SIZE:
1ST CHK:	DATE:	2ND CHK:	DATE:

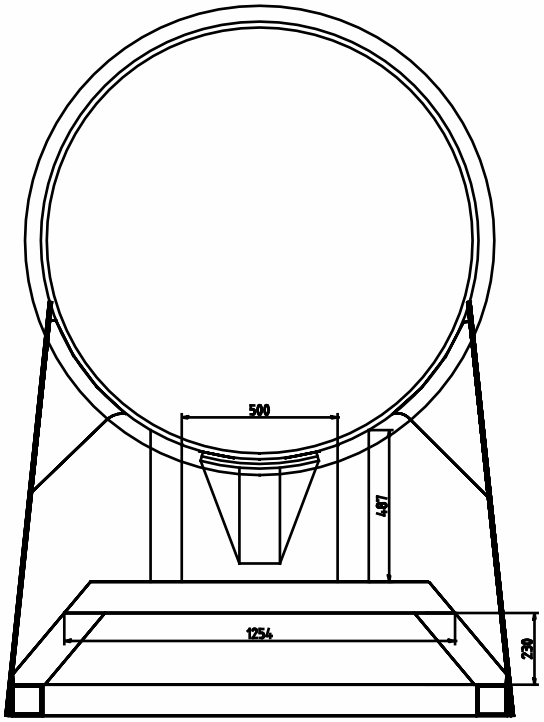

MICE LEG MODIFICATION

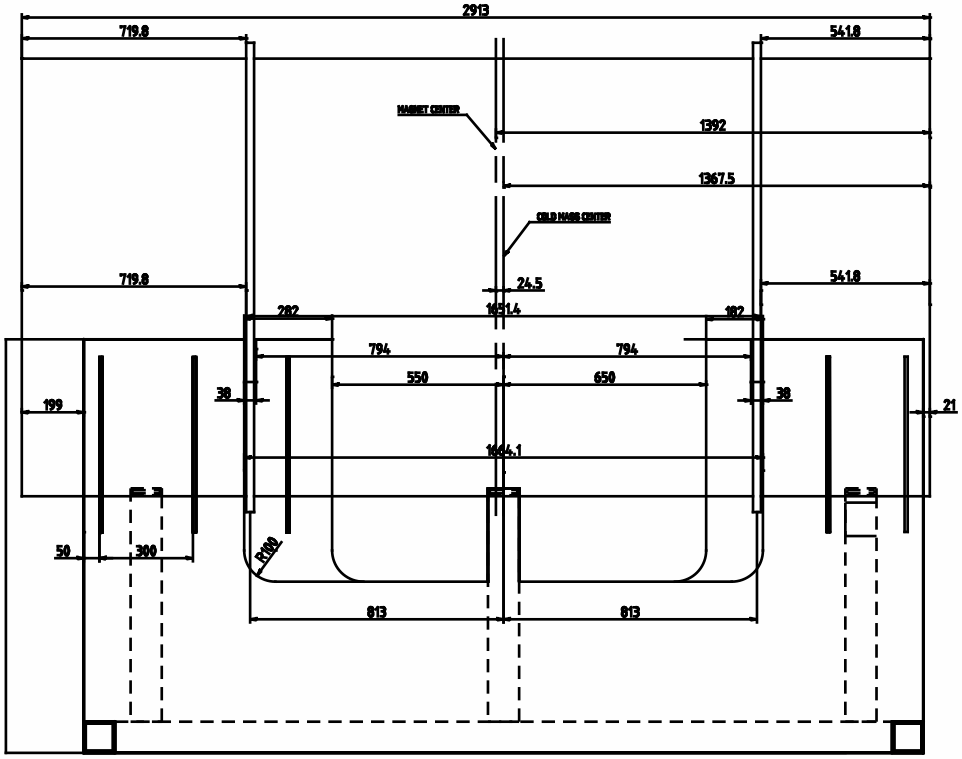

A-A

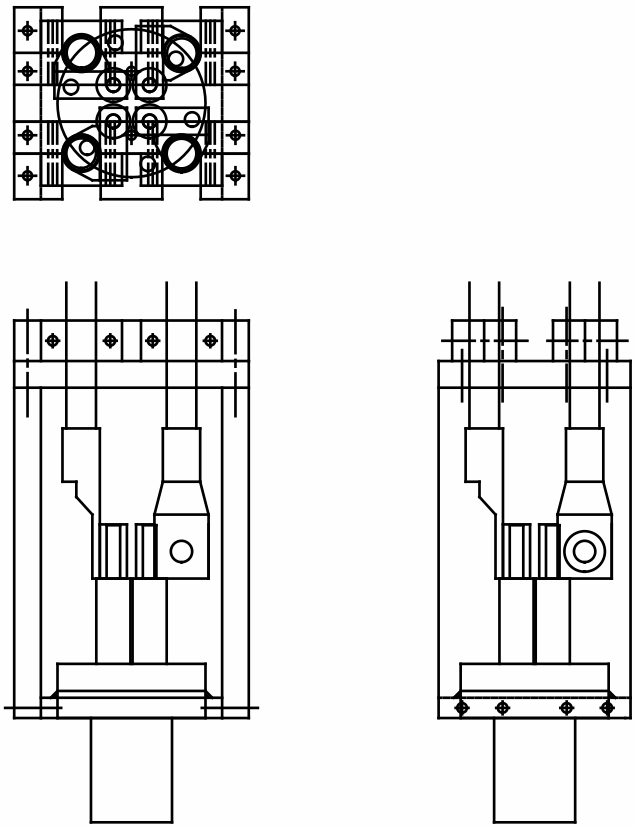

ALL DIMENSIONS ARE IN mm

THIRD ANGLE PROJECTION	WANG NMR INC 550 N CANYONS PARKWAY, LIVERMORE, CA 94550		
NAME: CONECTOR SUPPORT			
DWG #: S010B		SHT 1 OF 1	
MATERIAL:		QTY	
DWN BY: XU	DATE: MAY 23,2008	SCALE: TO FIT	DWG SIZE:
1ST CHK:	DATE:	2ND CHK:	DATE:

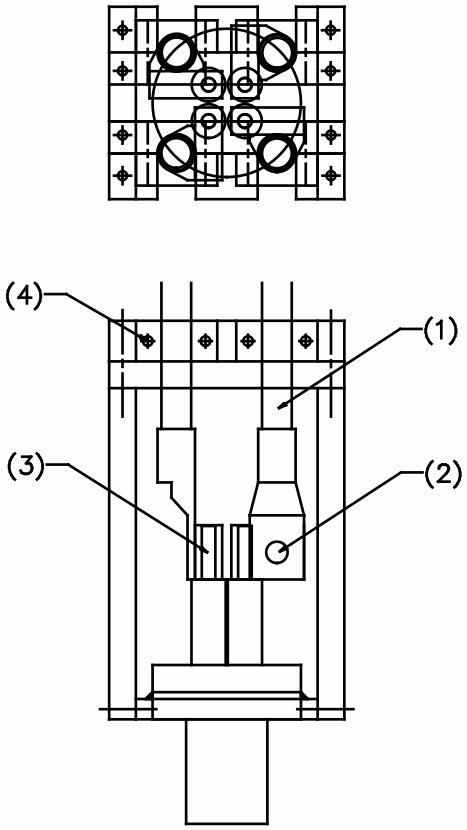

Install Procedure:
(1) Prepare short cable L=12"
(2) Screw short cable to connector
(3) Soft solder connector to feethru
(4) Install G-10 support
(5) Screw short cable to long cable
(6) Should be very carefully while installing

THIRD ANGLE PROJECTION	WANG NMR INC 550 N CANYONS PARKWAY, LIVERMORE, CA 94551		
NAME: CABLE SUPPORT			
DWG #: S010B		SHT 1 OF 1	
MATERIAL:		QTY	
DWN BY: XU	DATE: March 2,2010	SCALE: TO FIT	DWG SIZE:
1ST CHK:	DATE:	2ND CHK:	DATE:

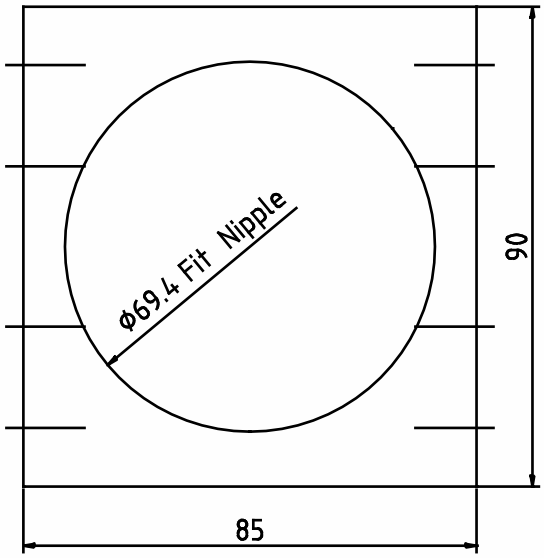

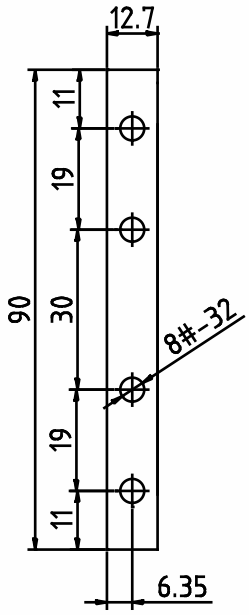

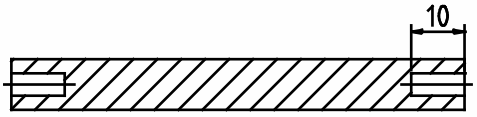

ALL DIMENSIONS ARE IN mm
MATERIAL IS 1/2 THICK S.S.304 PLATE

THIRD ANGLE PROJECTION	WANG NMR INC 550 N CANYONS PARKWAY, LIVERMORE, CA 94550		
NAME: CONECTOR SUPPORT			
DWG #: S011B		SHT 1 OF 1	
MATERIAL: S.S. 304		QTY	2
DWN BY: XU	DATE: MAY 23,2008	SCALE: TO FIT	DWG SIZE:
1ST CHK:	DATE:	2ND CHK:	DATE:

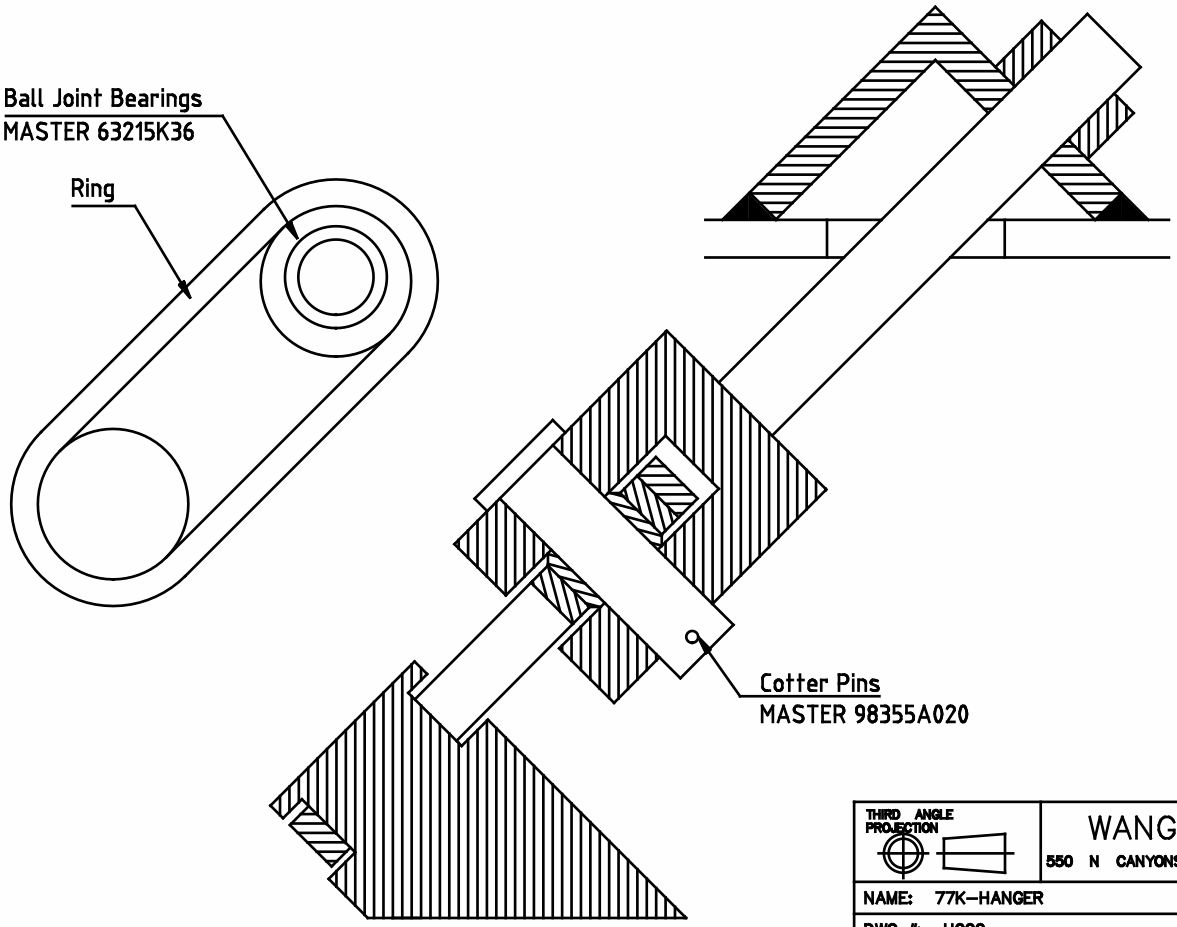

ALL DIMENSIONS ARE IN mm

THIRD ANGLE PROJECTION	WANG NMR INC 550 N CANYONS PARKWAY, LIVERMORE, CA 94550		
NAME: 77K-HANGER			
DWG #: H000		SHT 1 OF 1	
MATERIAL:		QTY	8
DWN BY: XU	DATE: MAR 25,2008	SCALE: TO FIT	DWG SIZE:
1ST CHK:	DATE:	2ND CHK:	DATE:

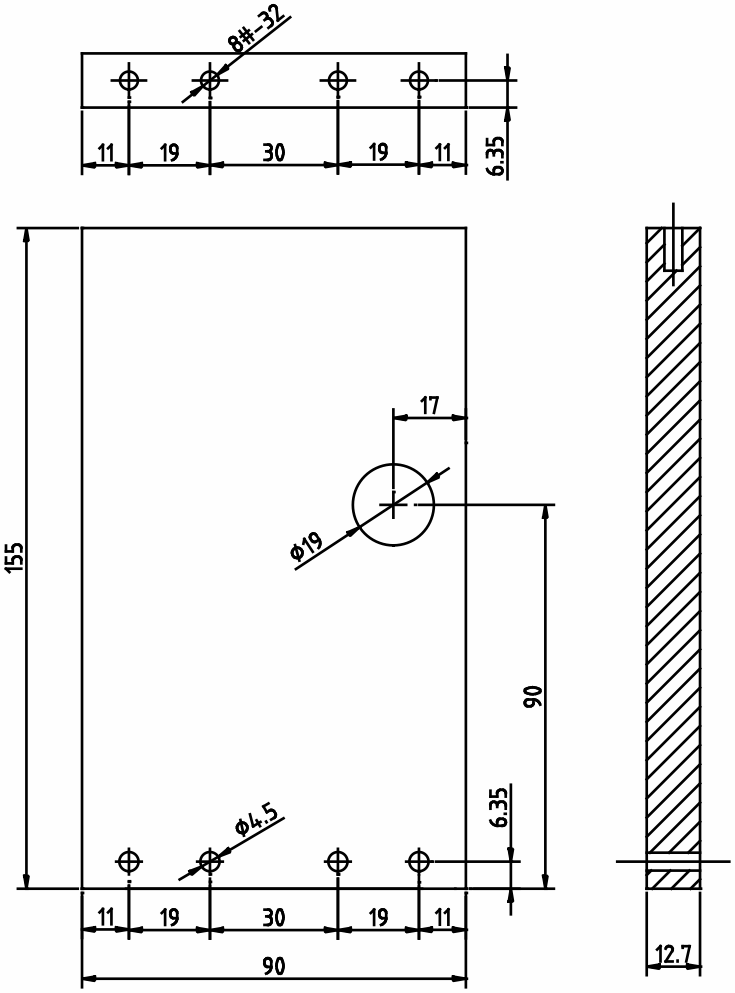

ALL DIMENSIONS ARE IN mm

THIRD ANGLE PROJECTION	WANG NMR INC 550 N CANYONS PARKWAY, LIVERMORE, CA 94550		
NAME: CONECTOR SUPPORT			
DWG #: S012B		SHT 1 OF 1	
MATERIAL: G-10		QTY	4
DWN BY: XU	DATE: MAY 23,2008	SCALE: TO FIT	DWG SIZE:
1ST CHK:	DATE:	2ND CHK:	DATE:

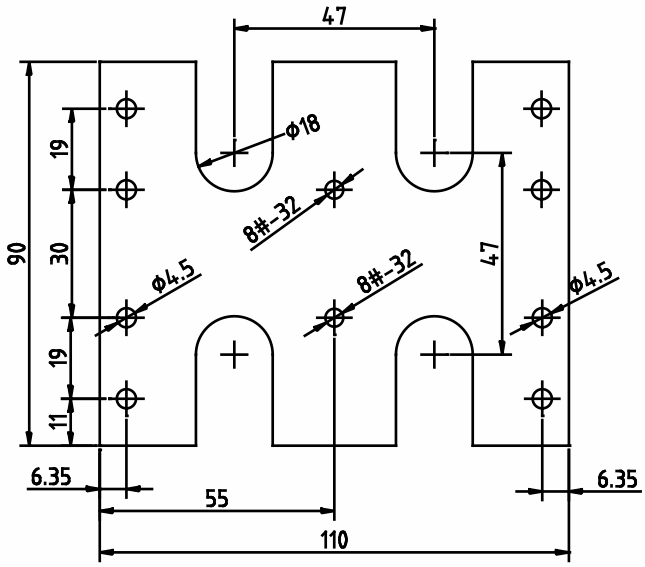

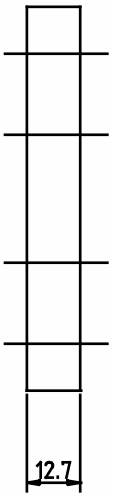

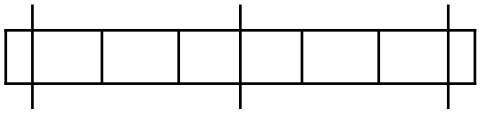

ALL DIMENSIONS ARE IN mm

THIRD ANGLE PROJECTION	WANG NMR INC 550 N CANYONS PARKWAY, LIVERMORE, CA 94550		
NAME: CONECTOR SUPPORT			
DWG #: S013B		SHT 1 OF 1	
MATERIAL: G-10		QTY	2
DWN BY: XU	DATE: MAY 23,2008	SCALE: TO FIT	DWG SIZE:
1ST CHK:	DATE:	2ND CHK:	DATE:

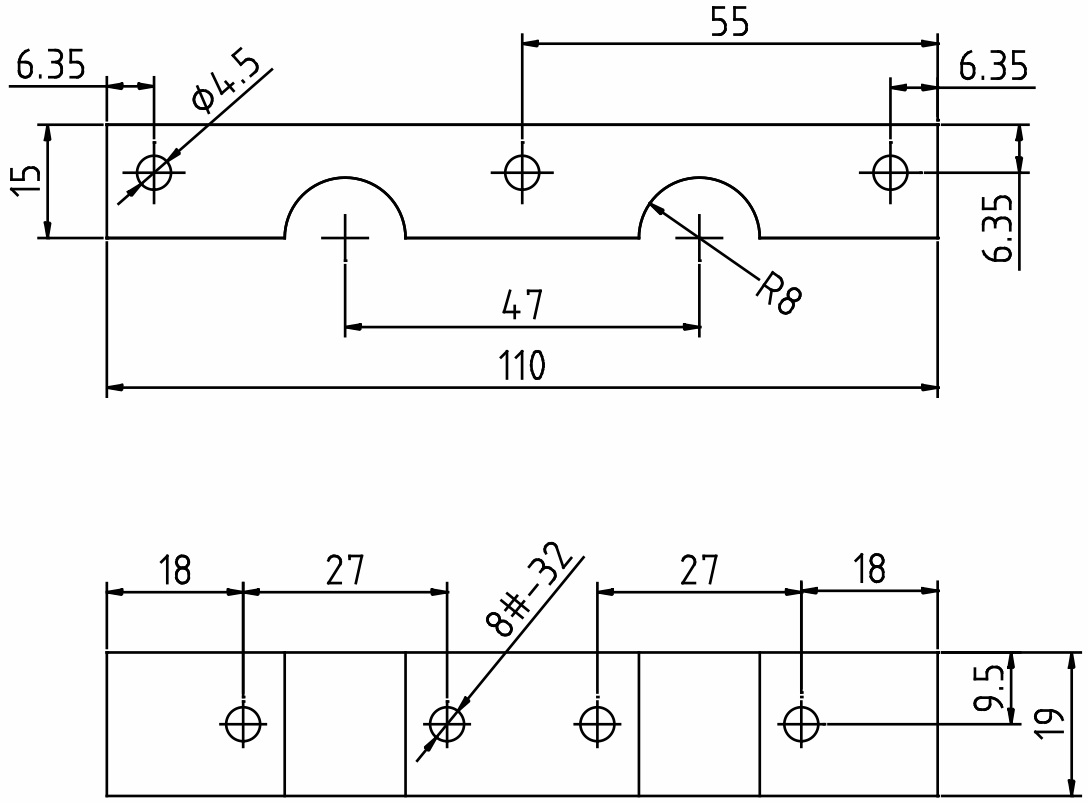

ALL DIMENSIONS ARE IN mm

THIRD ANGLE PROJECTION	WANG NMR INC 550 N CANYONS PARKWAY, LIVERMORE, CA 9455		
NAME: CONECTOR SUPPORT			
DWG #: S014B		SHT 1 OF 1	
MATERIAL: G-10		QTY	4
DWN BY: XU	DATE: MAY 23,2008	SCALE: TO FIT	DWG SIZE:
1ST CHK:	DATE:	2ND CHK:	DATE:

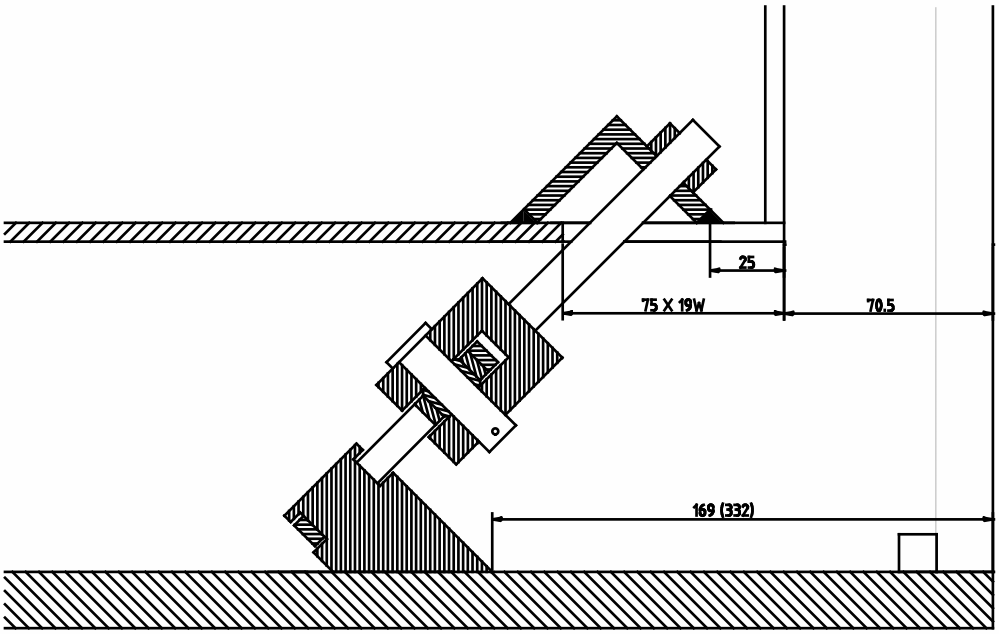

ALL DIMENSIONS ARE IN mm

THIRD ANGLE PROJECTION	WANG NMR INC 550 N CANYONS PARKWAY, LIVERMORE, CA 94550		
NAME: 77K–HANGER			
DWG #: H000		SHT 1 OF 1	
MATERIAL:		QTY	8
DWN BY: XU	DATE: MAR 25,2008	SCALE: TO FIT	DWG SIZE:
1ST CHK:	DATE:	2ND CHK:	DATE:

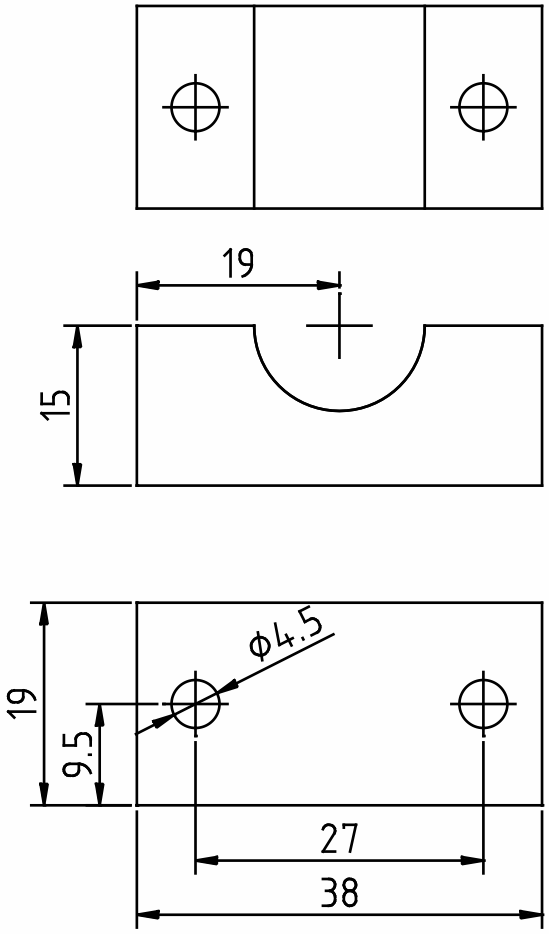

ALL DIMENSIONS ARE IN mm

THIRD ANGLE PROJECTION	WANG NMR INC 550 N CANYONS PARKWAY, LIVERMORE, CA 94550		
NAME: CONECTOR SUPPORT			
DWG #: S015B		SHT 1 OF 1	
MATERIAL: G-10		QTY	8
DWN BY: XU	DATE: MAY 23,2008	SCALE: TO FIT	DWG SIZE:
1ST CHK:	DATE:	2ND CHK:	DATE:

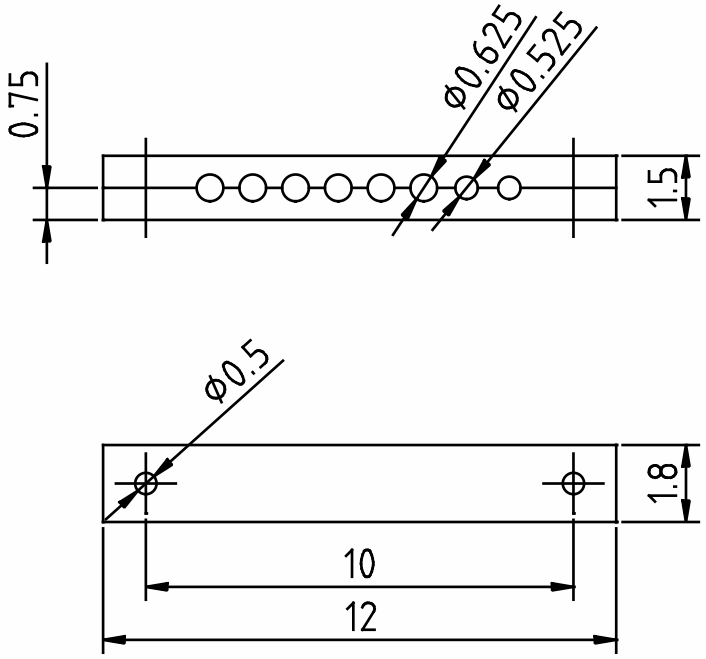

ALL DIMENSIONS ARE IN inch

THIRD ANGLE PROJECTION	WANG NMR INC 550 N CANYONS PARKWAY, LIVERMORE, CA 94551		
NAME: CONECTOR SUPPORT			
DWG #: S016B		SHT 1 OF 1	
MATERIAL: G-10		QTY	1
DWN BY: XU	DATE: APR 13,2009	SCALE: TO FIT	DWG SIZE:
1ST CHK:	DATE:	2ND CHK:	DATE:

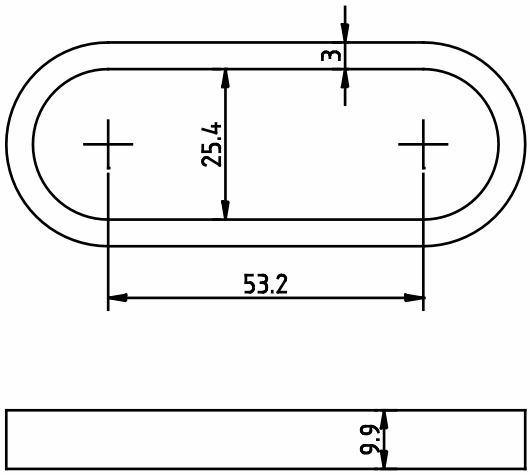

ALL DIMENSIONS ARE IN mm

THIRD ANGLE PROJECTION	WANG NMR INC 550 N CANYONS PARKWAY, LIVERMORE, CA 94550		
NAME: 77K-HANGER-RING			
DWG #: H001		SHT 1 OF 1	
MATERIAL:		QTY	8
DWN BY: XU	DATE: MAR 26,2008	SCALE: TO FIT	DWG SIZE:
1ST CHK:	DATE:	2ND CHK:	DATE:

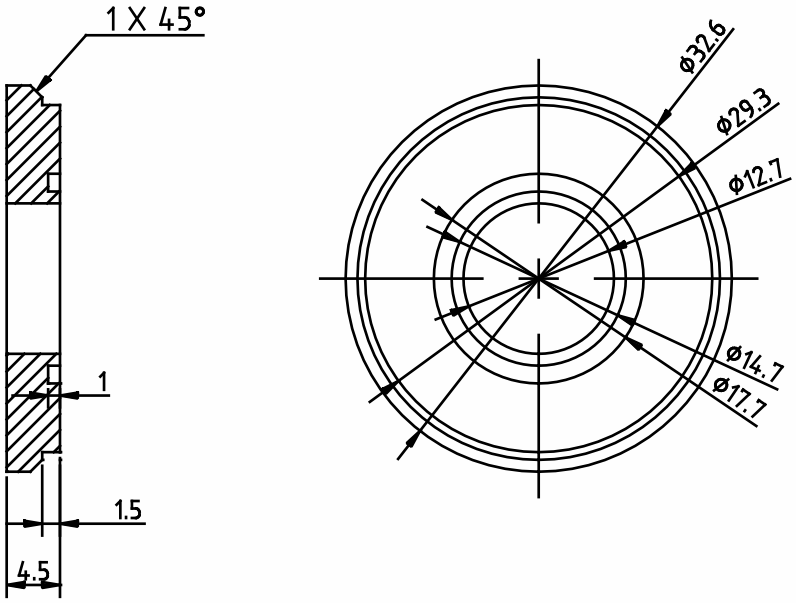

ALL DIMENSIONS ARE IN mm

THIRD ANGLE PROJECTION	WANG NMR INC 550 N CANYONS PARKWAY, LIVERMORE, CA 94550		
NAME: RELIEF VALVE INSTALL PLATE			
DWG #: V004		SHT 1 OF 1	
MATERIAL: S.S.304		QTY	1
DWN BY: XU	DATE: APR 1,2008	SCALE: TO FIT	DWG SIZE:
1ST CHK: DATE:		2ND CHK: DATE:	

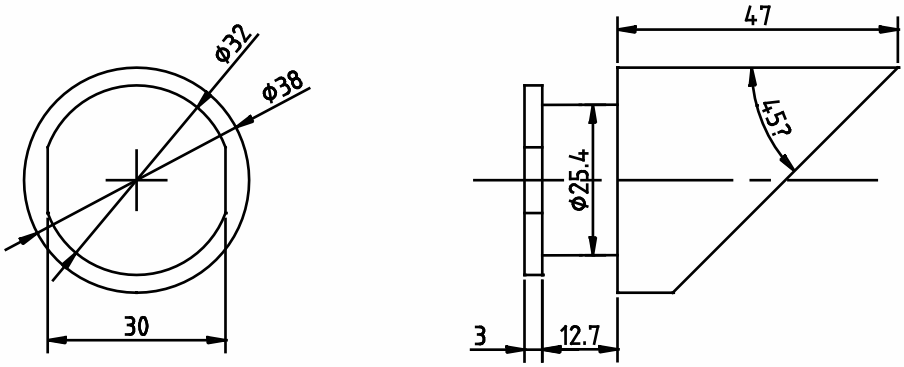

ALL DIMENSIONS ARE IN mm

THIRD ANGLE PROJECTION	WANG NMR INC 550 N CANYONS PARKWAY, LIVERMORE, CA 94550		
NAME: 77K-HANGER-HOOK			
DWG #: H002		SHT 1 OF 1	
MATERIAL: S.S.304		QTY	8
DWN BY: XU	DATE: MAR 26,2008	SCALE: TO FIT	DWG SIZE:
1ST CHK:	DATE:	2ND CHK:	DATE:

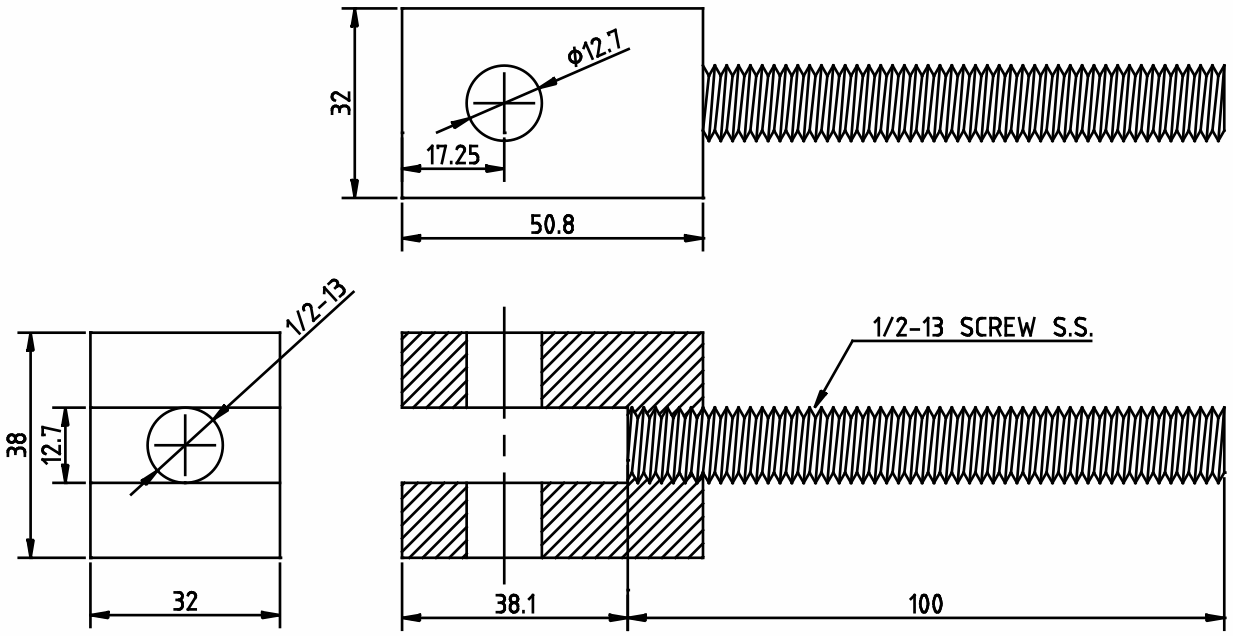

ALL DIMENSIONS ARE IN mm

THIRD ANGLE PROJECTION	WANG NMR INC 550 N CANYONS PARKWAY, LIVERMORE, CA 94550		
NAME: 77K-HANGER-FRAME			
DWG #: H003		SHT 1 OF 1	
MATERIAL: AL 6061		QTY	8
DWN BY: XU	DATE: MAR 26,2008	SCALE: TO FIT	DWG SIZE:
1ST CHK:	DATE:	2ND CHK:	DATE:

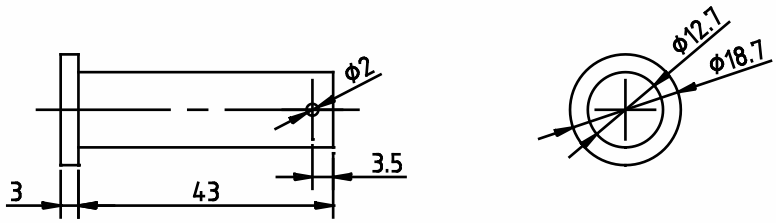

ALL DIMENSIONS ARE IN mm

THIRD ANGLE PROJECTION	WANG NMR INC 550 N CANYONS PARKWAY, LIVERMORE, CA 94550		
NAME: 77K–HANGER–PIN			
DWG #: H004		SHT 1 OF 1	
MATERIAL: S.S.304		QTY	8
DWN BY: XU	DATE: MAR 26,2008	SCALE: TO FIT	DWG SIZE:
1ST CHK:	DATE:	2ND CHK:	DATE:

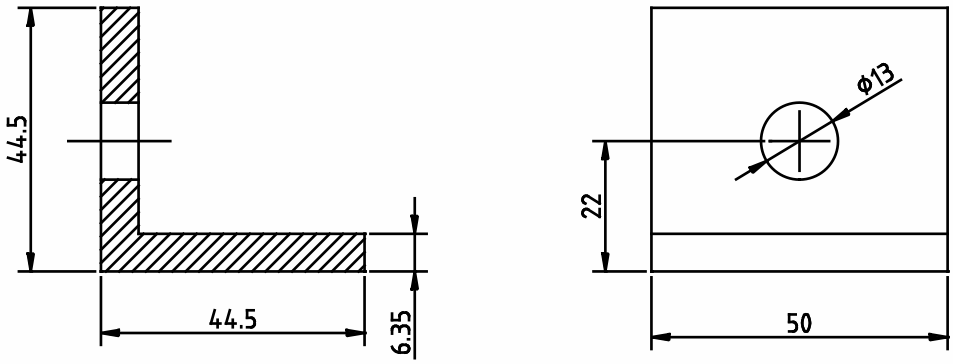

ALL DIMENSIONS ARE IN mm
MATERIAL IS AL 90° ANGLE

THIRD ANGLE PROJECTION	WANG NMR INC 550 N CANYONS PARKWAY, LIVERMORE, CA 94550		
NAME: 77K–HANGER–ANGLE			
DWG #: H005		SHT 1 OF 1	
MATERIAL: AL		QTY	8
DWN BY: XU	DATE: MAR 26,2008	SCALE: TO FIT	DWG SIZE:
1ST CHK:	DATE:	2ND CHK:	DATE:

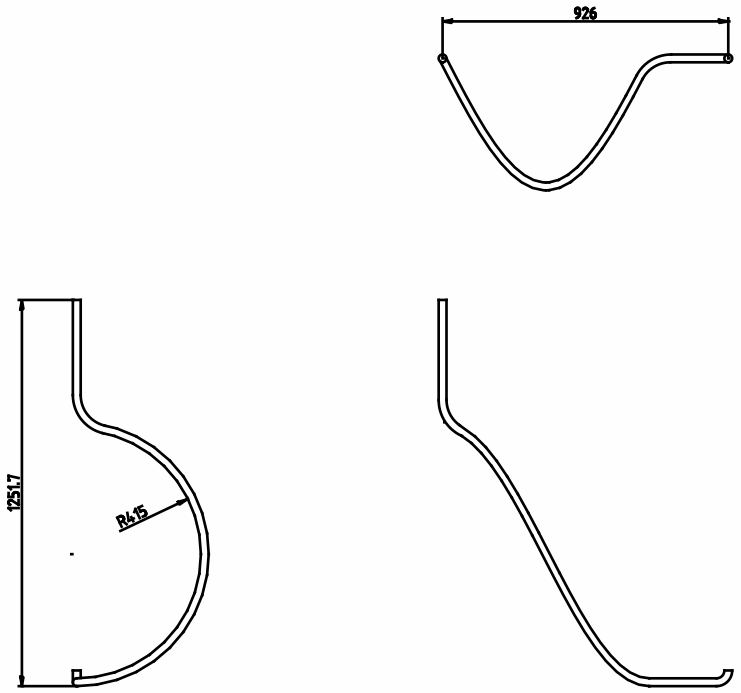

MATERIAL: 304 S.S. TUBE
SIZE: 1" OD X 0.035 WALL X 84" L
QTY: 1

ALL DIMENSIONS ARE IN mm
TOLERANCES: DECIMALS XXX=±.005 XX=±.01 X=±.1
ANGLES ±.5°
CONCENTRICITY ±.1 TOTAL INDICATION RUN OUT
PERPENDICULAR ±.05 (UNLESS OTHERWISE SPECIFIED)

THIRD ANGLE PROJECTION	WANG NMR INC 550 N CANYONS PARKWAY, LIVERMORE, CA 94550		
NAME: TUBE 1			
DWG #: MICE – T001B		SHT 1 OF 1	
MATERIAL: STAINLESS STEEL		QTY	1
DWN BY: XU	DATE: MAY 1,2008	SCALE: TO FIT	DWG SIZE:
1ST CHK: DATE:		2ND CHK: DATE:	

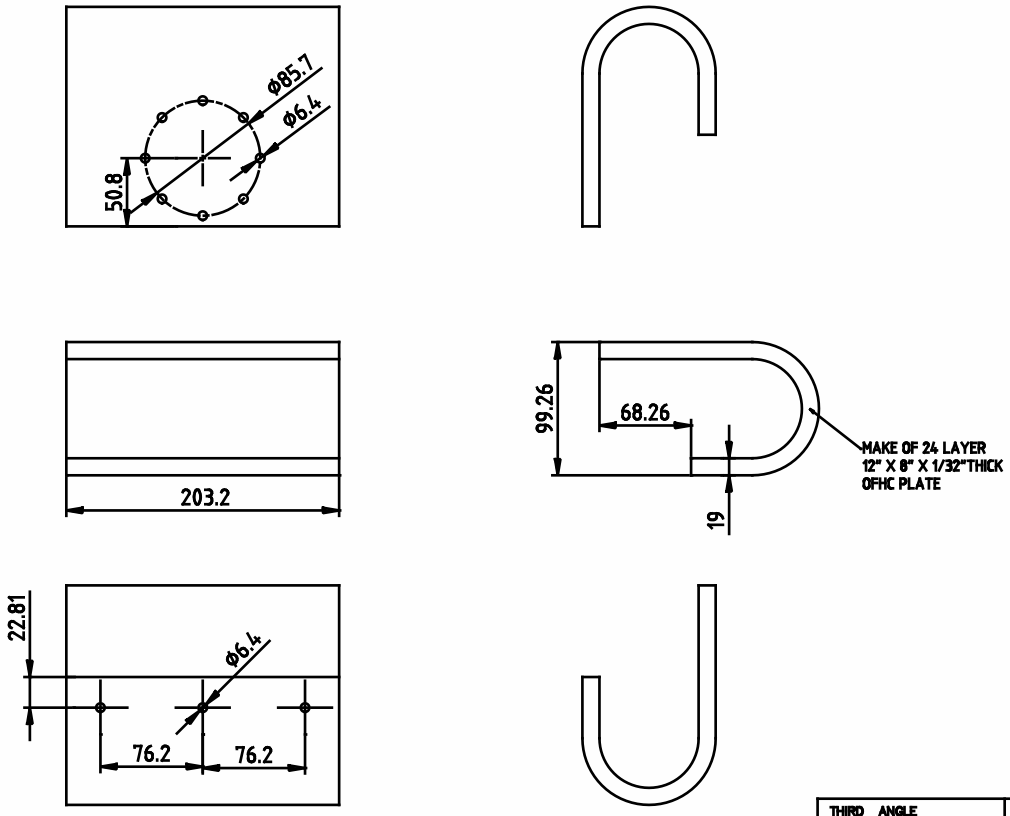

MATERIAL: OFHC PLATE
SIZE: 12" X 8" X 1/32"THICK
QTY: 16 LAYER

ALL DIMENSIONS ARE IN mm
TOLERANCES: DECIMALS XXX=±.005 XX=±.01 X=±.1
ANGLES ±.5°
CONCENTRICITY ±.1 TOTAL INDICATION RUN OUT
PERPENDICULAR ±.05 (UNLESS OTHERWISE SPECIFIED)

THIRD ANGLE PROJECTION	WANG NMR INC 550 N CANYONS PARKWAY, LIVERMORE, CA 94551	
NAME: FLEXIBLE CU STRIP		
DWG #: MICE – 2 – M010	SHT 1 OF 1	
MATERIAL: OFHC	QTY 1	
DWN BY: XU DATE: Aug 21, 2009	SCALE: TO FIT	DWG SIZE:
1ST CHK: DATE:	2ND CHK: DATE:	

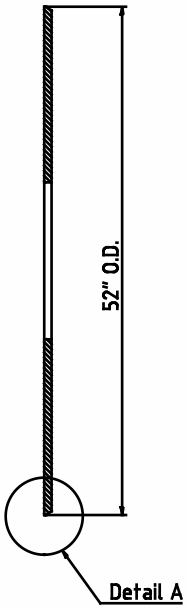

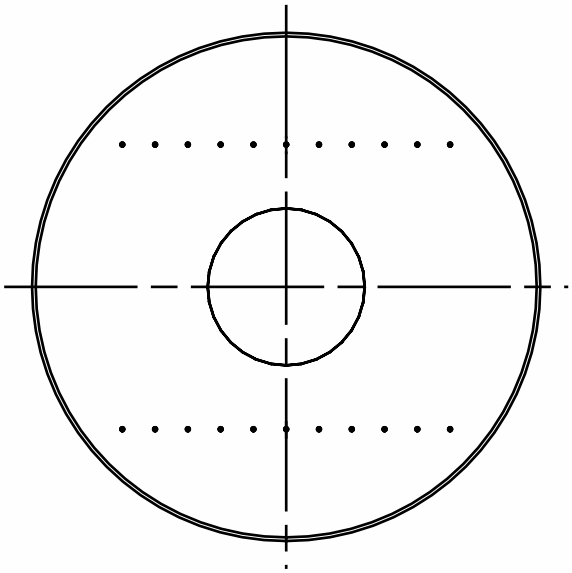

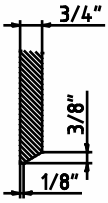

Detail A

ALL DIMENSIONS ARE IN in
TOLERANCES: DECIMALS XXX=±.005 XX=±.01 X=±.1
ANGLES ±.5°
CONCENTRICITY ±.1 TOTAL INDICATION RUN OUT
PERPENDICULAR ±.05 (UNLESS OTHERWISE SPECIFIED)

THIRD ANGLE PROJECTION	WANG NMR INC 550 N CANYONS PARKWAY, LIVERMORE, CA 94550		
NAME: BACK END PLATE			
DWG #: MICE – 3200B-1		SHT 1 OF 1	
MATERIAL: 304 STAINLESS STEEL		QTY	1
DWN BY: XU	DATE: FEB 9,2006	SCALE: TO FIT	DWG SIZE:
1ST CHK:	DATE:	2ND CHK:	DATE:

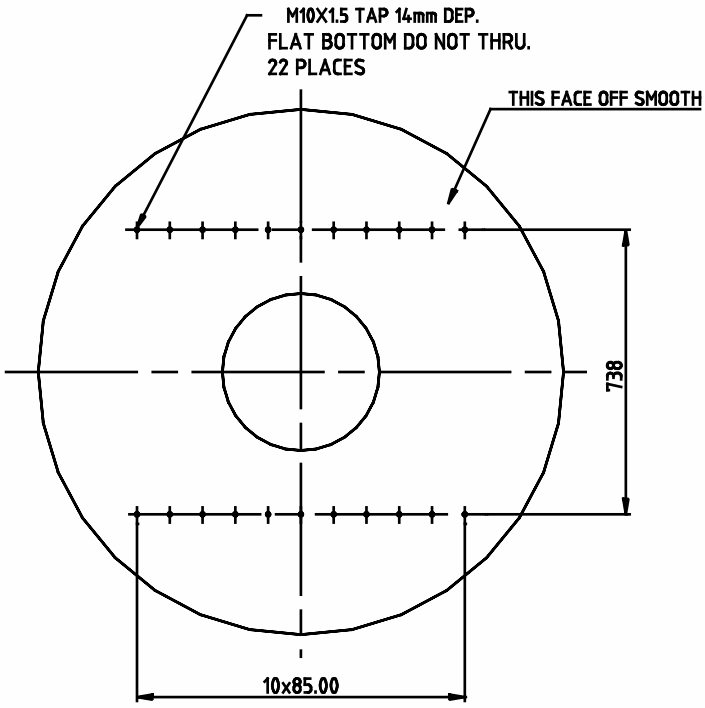

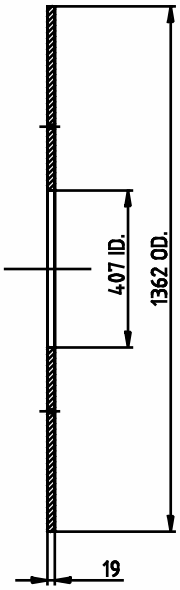

NOTES:
1) DIMENSIONS ARE IN mm
2) MATERIAL IS 3/4" THK. 304 S.S. PLATE
3) QTY. 2

SCOPE OF WORK:
(1) WE SUPPLY 3/4" THICK PLATE WITH
ID=407-3mm OD=1362+3mm TO MACHINE
ID=407±0.2mm OD=1362±0.2mm
(3) TAP M10 HOLE AS SHOW, DEPTH=14mm

ALL DIMENSIONS ARE IN mm
TOLERANCES: DECIMALS XXX=±.005 XX=±.01 X=±.1
ANGLES ±.5°
CONCENTRICITY ±.1 TOTAL INDICATION RUN OUT
PERPENDICULAR ±.05 (UNLESS OTHERWISE SPECIFIED)

THIRD ANGLE PROJECTION	WANG NMR INC 550 N CANYONS PARKWAY, LIVERMORE, CA 94550		
NAME: BACK END PLATE			
DWG #: MICE – 3200B		SHT 1 OF 1	
MATERIAL: 304 STAINLESS STEEL		QTY	2
DWN BY: XU	DATE: NOV 15,2007	SCALE: TO FIT	DWG SIZE:
1ST CHK:	DATE:	2ND CHK:	DATE:

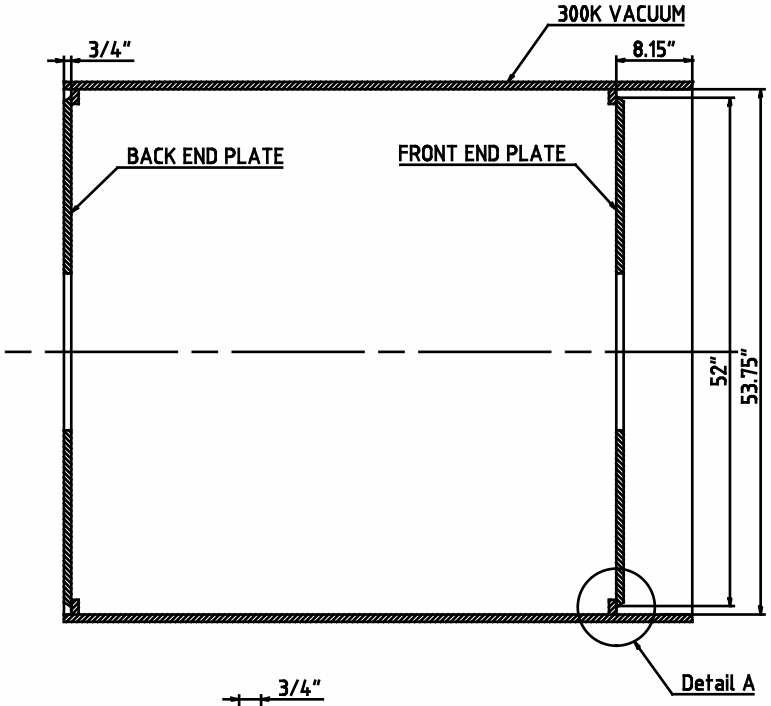

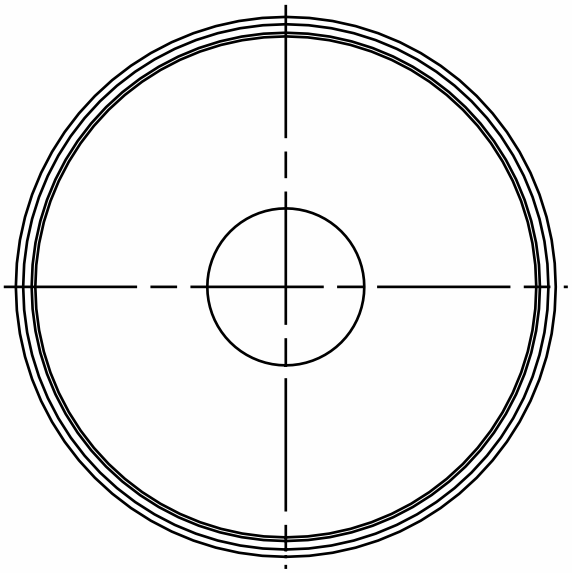

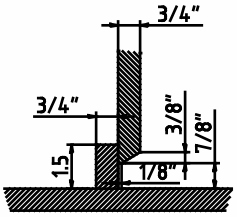

Detail A

ALL DIMENSIONS ARE IN in
TOLERANCES: DECIMALS XXX=±.005 XX=±.01 X=±.1
ANGLES ±.5°
CONCENTRICITY ±.1 TOTAL INDICATION RUN OUT
PERPENDICULAR ±.05 (UNLESS OTHERWISE SPECIFIED)

THIRD ANGLE PROJECTION	WANG NMR INC 550 N CANYONS PARKWAY, LIVERMORE, CA 94550		
NAME: END PLATE ASSEMBLY			
DWG #: MICE – 3300B-1		SHT 1 OF 1	
MATERIAL: 304 STAINLESS STEEL		QTY	1
DWN BY: XU	DATE: FEB 9,2006	SCALE: TO FIT	DWG SIZE:
1ST CHK:	DATE:	2ND CHK:	DATE:

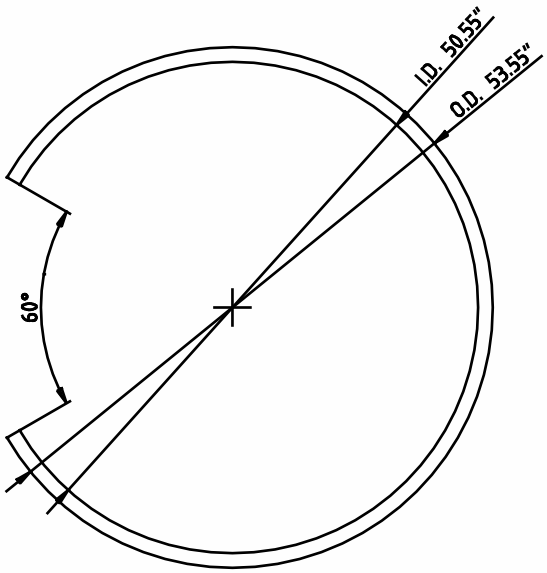

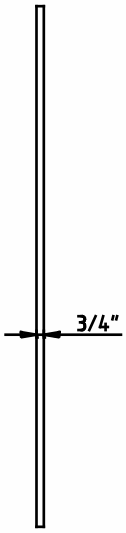

NOTES:
1) DIMENSIONS ARE IN in
2) MATERIAL IS 3/4" THICK 1.5" WIDTH 12' LENGTH 304 S.S. PLATE
3) QTY. 3

ALL DIMENSIONS ARE IN in
TOLERANCES: DECIMALS XXX=±.005 XX=±.01 X=±.1
ANGLES ±.5°
CONCENTRICITY ±.1 TOTAL INDICATION RUN OUT
PERPENDICULAR ±.05 (UNLESS OTHERWISE SPECIFIED)

THIRD ANGLE PROJECTION	WANG NMR INC 550 N CANYONS PARKWAY, LIVERMORE, CA 94550		
NAME: END PLATE RING			
DWG #: MICE – 3300–2		SHT 1 OF 1	
MATERIAL: 304 STAINLESS STEEL		QTY	3
DWN BY: XU	DATE: FEB 9,2006	SCALE: TO FIT	DWG SIZE:
1ST CHK:	DATE:	2ND CHK:	DATE:

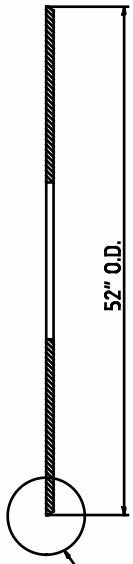

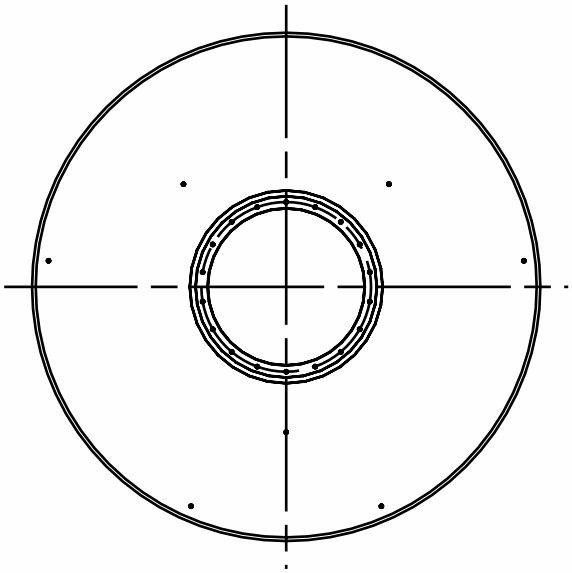

Detail A

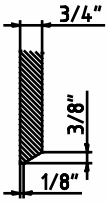

Detail A

ALL DIMENSIONS ARE IN in
TOLERANCES: DECIMALS XXX=±.005 XX=±.01 X=±.1
ANGLES ±.5°
CONCENTRICITY ±.1 TOTAL INDICATION RUN OUT
PERPENDICULAR ±.05 (UNLESS OTHERWISE SPECIFIED)

THIRD ANGLE PROJECTION	WANG NMR INC 550 N CANYONS PARKWAY, LIVERMORE, CA 94550		
NAME: FRONT END PLATE			
DWG #: MICE – 3300B-3		SHT 1 OF 1	
MATERIAL: 304 STAINLESS STEEL		QTY	1
DWN BY: XU	DATE: FEB 9,2006	SCALE: TO FIT	DWG SIZE:
1ST CHK:	DATE:	2ND CHK:	DATE:

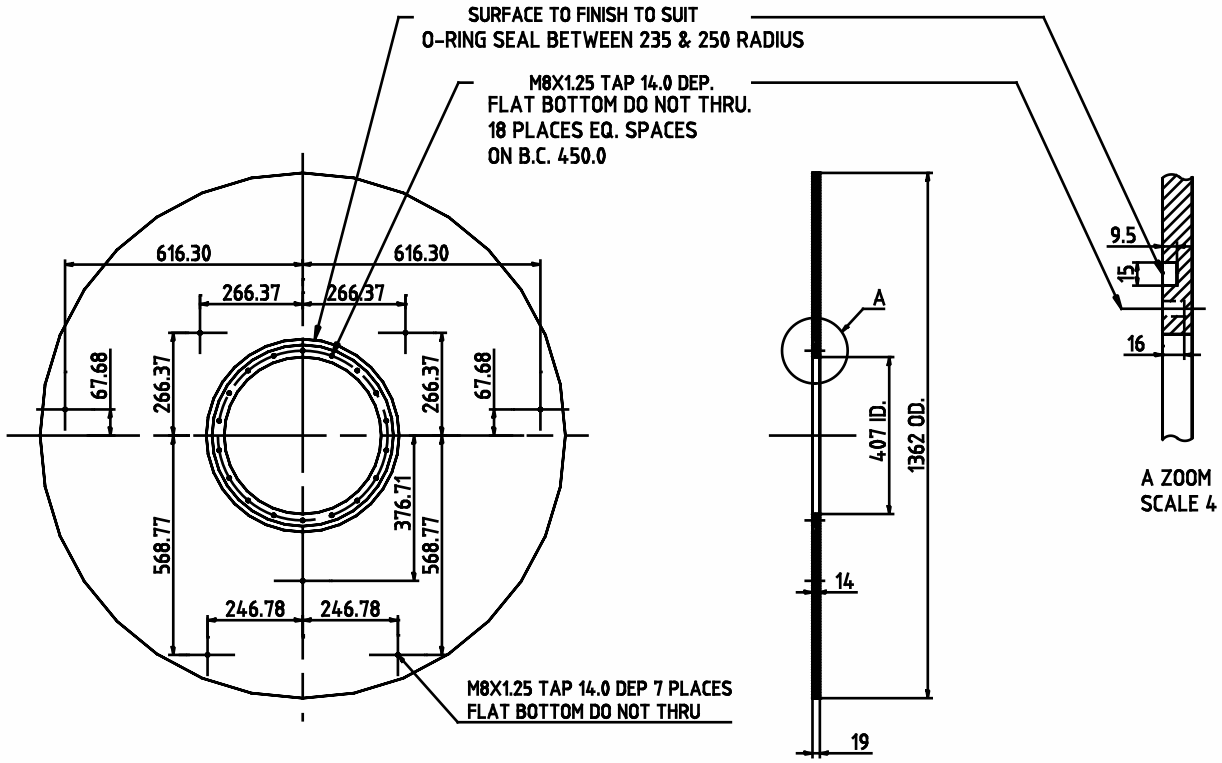

NOTES:
1) DIMENSIONS ARE IN mm
2) MATERIAL IS 3/4" THK. 304 S.S. PLATE
3) QTY. 2

SCOPE OF WORK:
(1) WE SUPPLY 3/4" THICK PLATE WITH
ID=407-3mm OD=1362+3mm TO MACHINE
ID=407±0.2mm OD=1362±0.2mm
(2) MACHINE ORING GROOVP + TAP M8x1.25
(3) TAP M8 HOLE AS SHOW, DEPTH=14mm

ALL DIMENSIONS ARE IN mm
TOLERANCES: DECIMALS XXX=±.005 XX=±.01 X=±.1
ANGLES ±.5°
CONCENTRICITY ±.1 TOTAL INDICATION RUN OUT
PERPENDICULAR ±.05 (UNLESS OTHERWISE SPECIFIED)

THIRD ANGLE PROJECTION	WANG NMR INC 550 N CANYONS PARKWAY, LIVERMORE, CA 94550		
NAME: FRONT END PLATE			
DWG #: MICE – 3300B		SHT 1 OF 1	
MATERIAL: 304 STAINLESS STEEL		QTY	2
DWN BY: XU	DATE: NOV 15,2007	SCALE: TO FIT	DWG SIZE:
1ST CHK: DATE:		2ND CHK: DATE:	

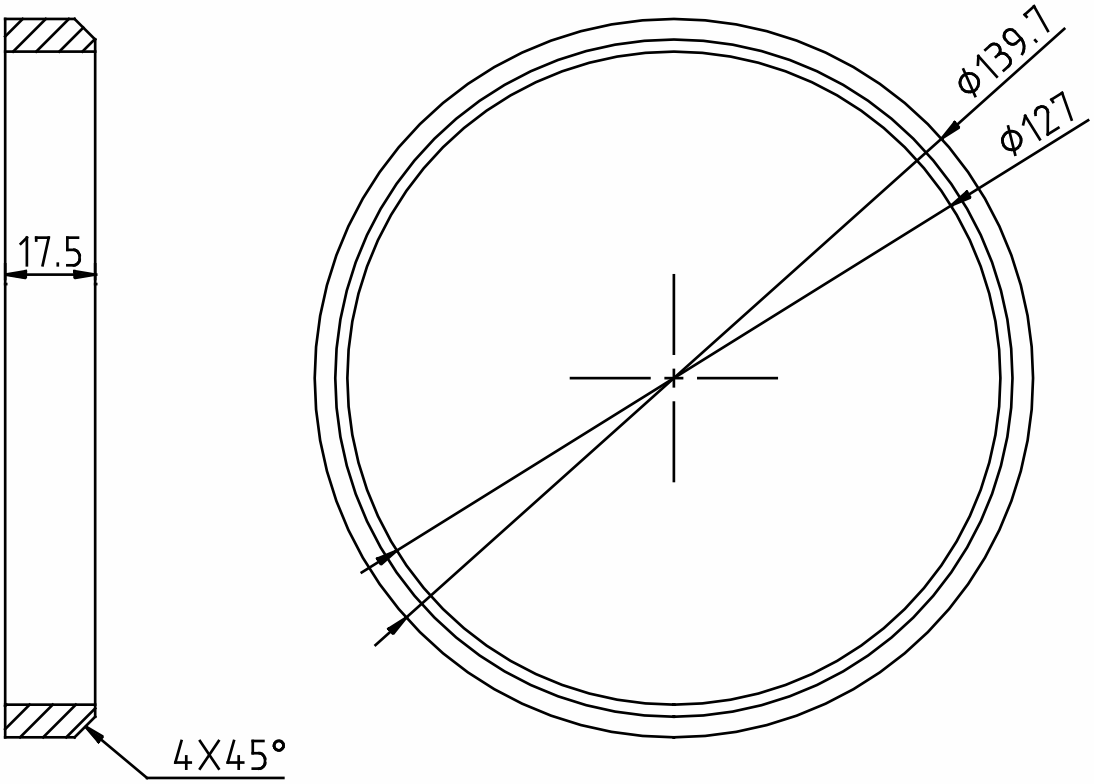

THIRD ANGLE PROJECTION

WANG NMR INC

550 N CANYONS PARKWAY, LIVERMORE, CA 94550

NAME: SUPPORT RING

DWG #: MICE – 3510B

SHT 1 OF 1

MATERIAL: S.S. 304

QTY

DWN BY: XU DATE: DEC 14,20

SCALE: TO FIT

DWG SIZE:

1ST CHK: DATE:

2ND CHK: DATE:

ALL DIMENSIONS ARE IN mm

TOLERANCES: DECIMALS XXX=±.005 XX=±.01 X=±.1

ANGLES ±.5°

CONCENTRICITY ±.1 TOTAL INDICATION RUN OUT

PERPENDICULAR ±.05

(UNLESS OTHERWISE SPECIFIED)

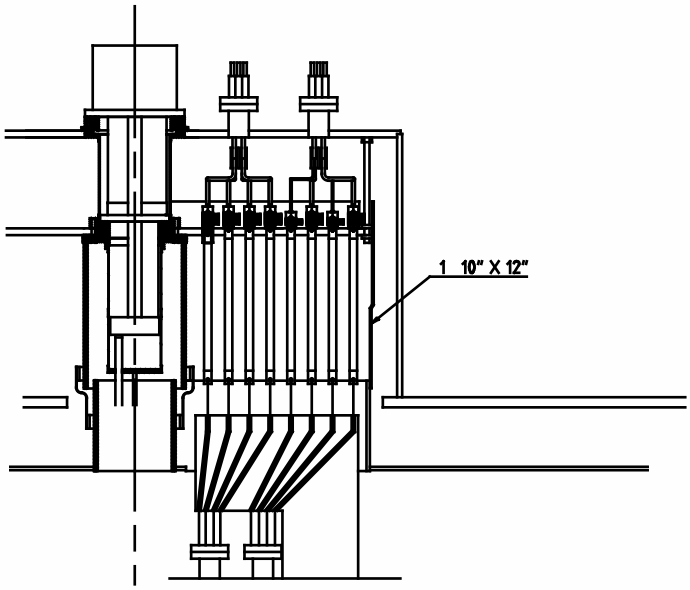

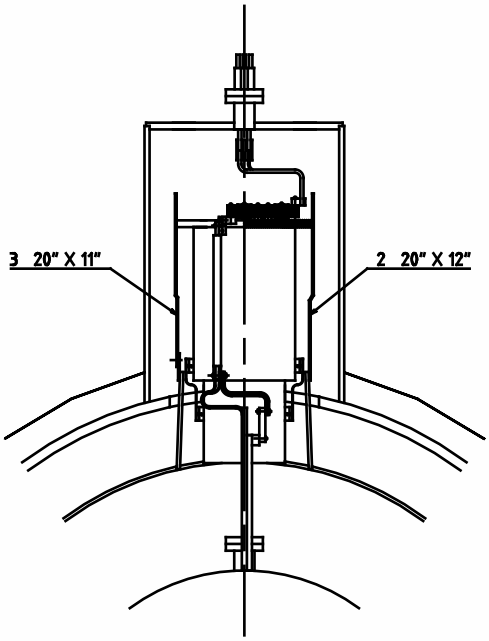

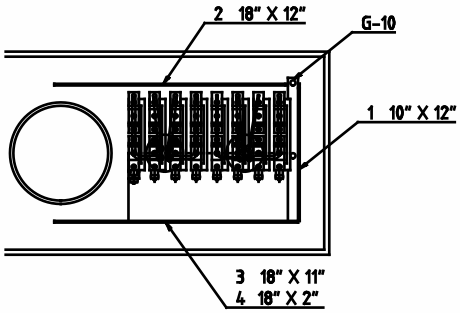

ALL DIMENSIONS ARE IN mm

THIRD ANGLE PROJECTION	WANG NMR INC 550 N CANYONS PARKWAY, LIVERMORE, CA 94550		
NAME: MICE TRACKER MODULE 4.5T TRACKER SOLENOID MAGNET			
DWG #: MICE-0000B		SHT 1 OF 1	
MATERIAL:		QTY	
DWN BY: XU	DATE: OCT 31,2005	SCALE: TO FIT	DWG SIZE:
1ST CHK:	DATE:	2ND CHK:	DATE:

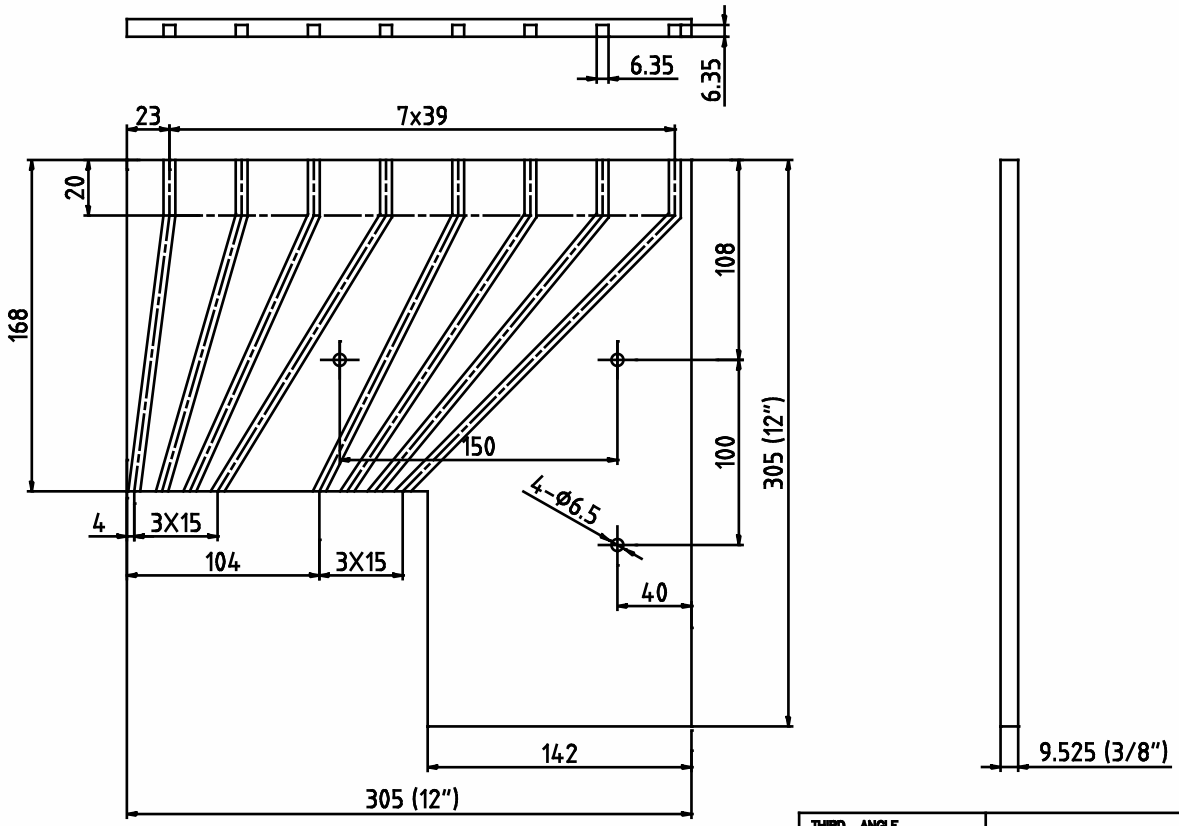

THIRD ANGLE PROJECTION

WANG NMR INC
550 N CANYONS PARKWAY, LIVERMORE, CA 94550

NAME: G-10 PLATE S

DWG #: MICE - 8523B | SHT 1 OF 1

MATERIAL: G-10 | QTY 1

DWN BY: XU DATE: NOV 9,2005 SCALE: TO FIT DWG SIZE:

1ST CHK: DATE: 2ND CHK: DATE:

ALL DIMENSIONS ARE IN mm
TOLERANCES: DECIMALS XXX=±.005 XX=±.01 X=±.1
ANGLES ±.5°
CONCENTRICITY ±.1 TOTAL INDICATION RUN OUT
PERPENDICULAR ±.05 (UNLESS OTHERWISE SPECIFIED)

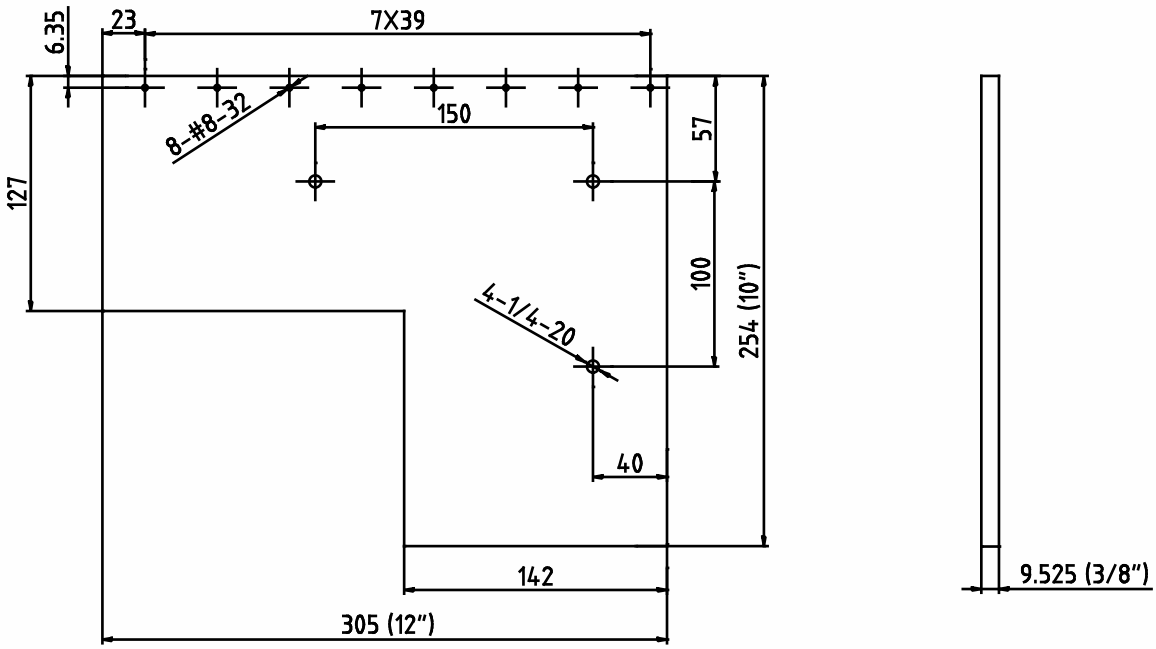

THIRD ANGLE PROJECTION

WANG NMR INC

550 N CANYONS PARKWAY, LIVERMORE, CA 94550

NAME: SUPPORT PLATE S			
DWG #: MICE – 8524B		SHT 1 OF 1	
MATERIAL: AL		QTY	1
DWN BY: XU	DATE: NOV 9,2005	SCALE: TO FIT	DWG SIZE:
1ST CHK:	DATE:	2ND CHK:	DATE:

ALL DIMENSIONS ARE IN mm
TOLERANCES: DECIMALS XXX=±.005 XX=±.01 X=±.1
ANGLES ±.5°
CONCENTRICITY ±.1 TOTAL INDICATION RUN OUT
PERPENDICULAR ±.05 (UNLESS OTHERWISE SPECIFIED)

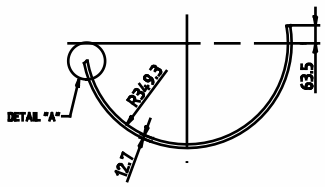

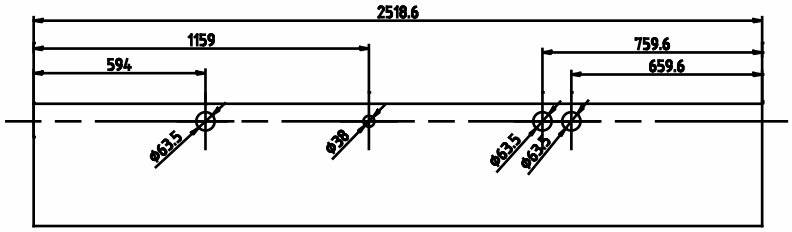

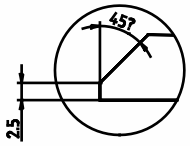

DETAIL "A"

NOTES:
1) DIMENSIONS ARE IN mm
2) MATERIAL IS 1/2" THICK 6061T6 ALUMINUM PLATE
3) WORK: CUTTING MATERIAL, ROLLING & TRAMFER EDGES
4) QTY. 1

THIRD ANGLE PROJECTION	WANG NMR INC 550 N CANYONS PARKWAY, LIVERMORE, CA 94550		
NAME: COIL FORM COVER			
DWG #: MICE – C002B		SHT 1 OF 1	
MATERIAL: AL		QTY	
DWN BY: XU	DATE: FEB 8,2006	SCALE: TO FIT	DWG SIZE:
1ST CHK:	DATE:	2ND CHK:	DATE:

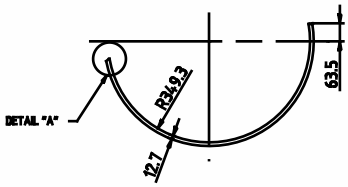

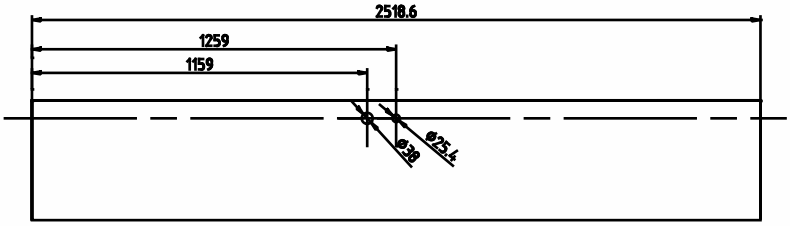

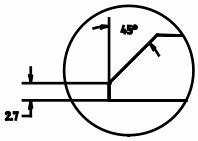

DETAIL "A"

NOTES:
1) DIMENSIONS ARE IN mm
2) MATERIAL IS 1/2" THICK 6061T6 ALUMINUM PLATE
3) WORK: CUTTING MATERIAL, ROLLING & TRAMFER EDGES
4) QTY. 1

THIRD ANGLE PROJECTION	WANG NMR INC 550 N CANYONS PARKWAY, LIVERMORE, CA 94550		
NAME: COIL FORM COVER			
DWG #: MICE – C002B1		SHT 1 OF 1	
MATERIAL: AL		QTY	
DWN BY: XU	DATE: FEB 8,2008	SCALE: TO FIT	DWG SIZE:
1ST CHK: DATE:		2ND CHK: DATE:	

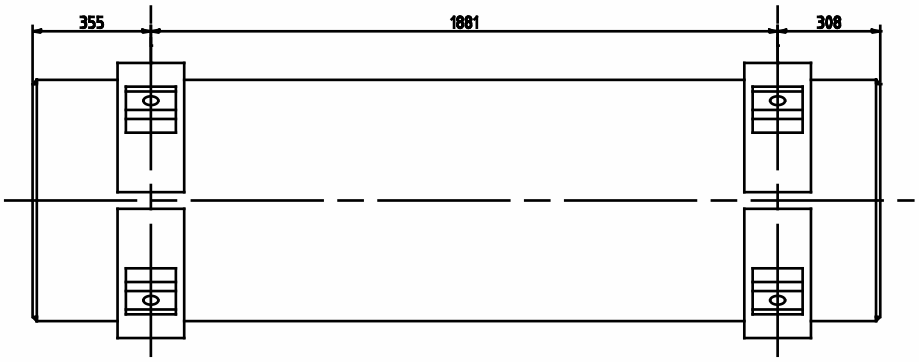

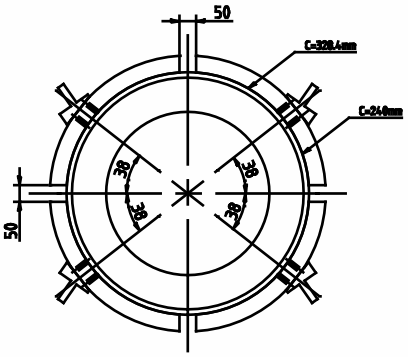

ALL DIMENSIONS ARE IN mm

THIRD ANGLE PROJECTION	WANG NMR INC 550 N CANYONS PARKWAY, LIVERMORE, CA 94550		
NAME: MICE TRACKER MODULE 4.5T TRACKER SOLENOID MAGNET			
DWG #: MICE-C005B		SHT 1 OF 1	
MATERIAL:		QTY	
DWN BY: XU	DATE: OCT 31,2005	SCALE: TO FIT	DWG SIZE:
1ST CHK:	DATE:	2ND CHK:	DATE:

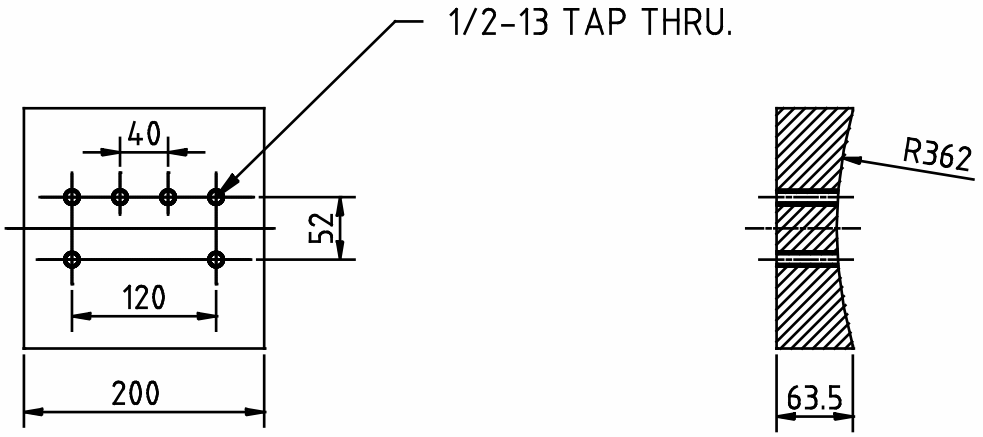

NOTES:
1) DIMENSIONS ARE IN mm
2) MATERIAL IS 8"X 8"X 2.5" 6061AL
3) QTY. 8

THIRD ANGLE PROJECTION	WANG NMR INC 550 N CANYONS PARKWAY, LIVERMORE, CA 94551		
NAME: SUSPENSION BLOCK			
DWG #: MICE-C005B		SHT 1 OF 1	
MATERIAL: 6061 AL		QTY	
DWN BY: XU	DATE: July 20, 2009	SCALE: TO FIT	DWG SIZE:
1ST CHK:	DATE:	2ND CHK:	DATE:

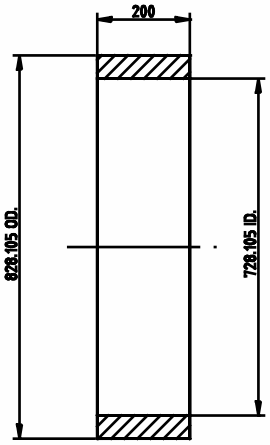

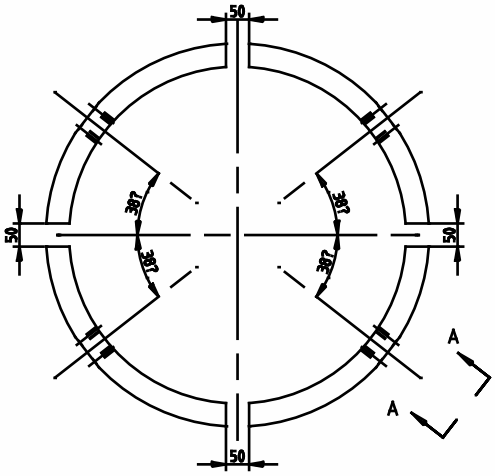

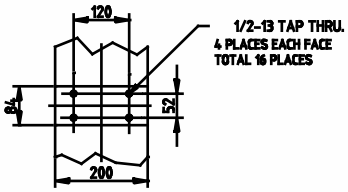

NOTES:
1) DIMENSIONS ARE IN mm
2) MATERIAL IS 6061T6
3) QTY. 2

THIRD ANGLE PROJECTION	WANG NMR INC 550 N CANYONS PARKWAY, LIVERMORE, CA 94550	
NAME: SUSPENSION RING		
DWG #: MICE-C005B	SHT 1 OF 1	
MATERIAL: AL	QTY	
DWN BY: XU DATE: FEB 8,2006	SCALE: TO FIT	DWG SIZE:
1ST CHK: DATE:	2ND CHK: DATE:	

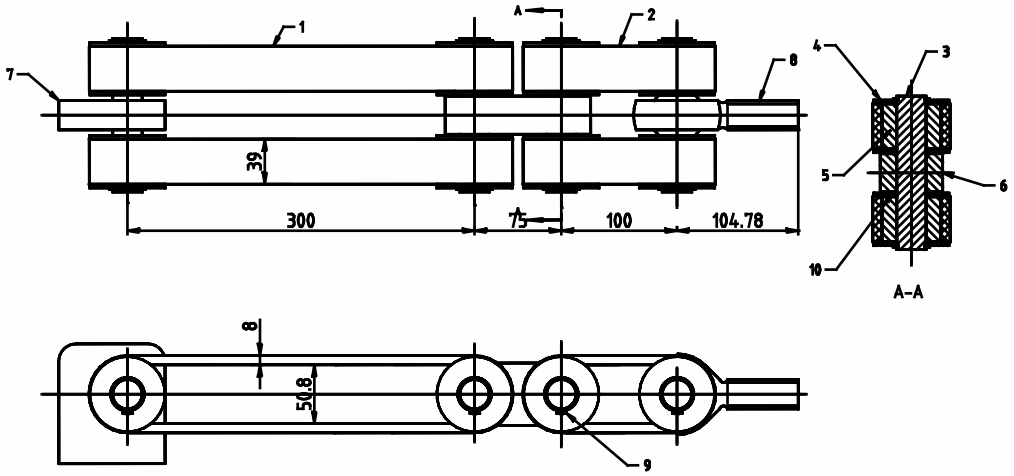

QTY.	ITEM	DWG. No.	DESCRIPTION	NOTE
6	10	MICE-L00 7	SPACER	304 S.S.
8	9		1" RETAINAIN RING	
1	8		1" HIGH STRENTH ROD END	
1	7	MICE-C007	4.2K BRACKET	304 S.S.
1	6	MICE-L00 6	50K BRACKET	304 S.S.
8	5	MICE-L00 5	BUSHER	304 S.S.
16	4	MICE-L00 4	WASHER	304 S.S.
4	3	MICE-L00 3	PIN	INCONEL
2	2	MICE-L00 2	50K-300K FIBER GLASS STRIP	S2 GLASS
2	1	MICE-L00 1	4.2K-50K FIBER GLASS STRIP	S2 GLASS

THIRD ANGLE PROJECTION

WANG NMR INC

550 N CANYONS PARKWAY, LIVERMORE, CA 94550

NAME: MICE TRACKER MODULE 25T COLD MASS SUPPORT

DWG #: MICE – L000 | SHT 1 OF 1

MATERIAL: | QTY 8

DWN BY: XU DATE: DEC 10,20 | SCALE: TO FIT | DWG SIZE:

1ST CHK: DATE: | 2ND CHK: DATE:

ALL DIMENSIONS ARE IN mm
TOLERANCES: DECIMALS XXX=±.005 XX=±.01 X=±.1
ANGLES ±.5°
CONCENTRICITY ±.1 TOTAL INDICATION RUN OUT
PERPENDICULAR ±.05 (UNLESS OTHERWISE SPECIFIED)

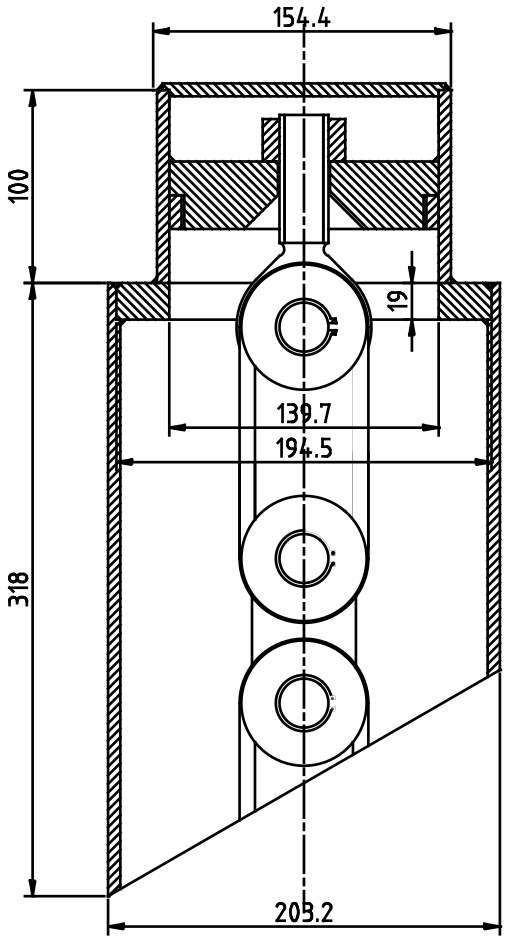

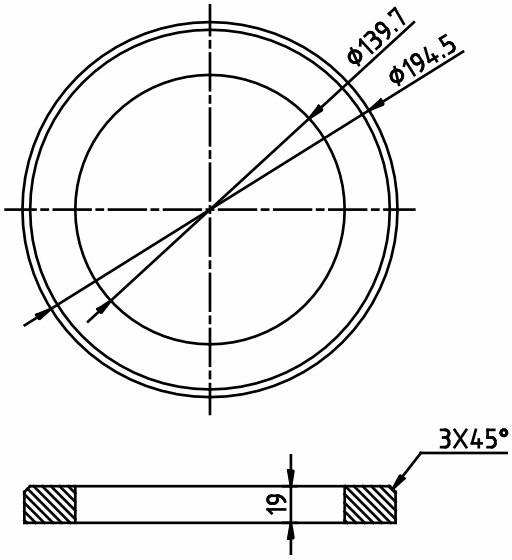

MATERIAL IS 8"OD 7.5"ID 304 S.S. TUBE TOTAL LENGTH IS 12.5"/EA X16=200" THE FLANGE IS 8"OD 5.5"ID 3/4"THICK 304 S.S. PLATE

ALL DIMENSIONS ARE IN mm

THIRD ANGLE PROJECTION	WANG NMR INC 550 N CANYONS PARKWAY, LIVERMORE, CA 94550		
NAME: COLD MASS			
DWG #: MICE – C007C1		SHT 1 OF 1	
MATERIAL: 304 S.S.		QTY	8
DWN BY: XU	DATE: JAN 26,2008	SCALE: TO FIT	DWG SIZE:
1ST CHK:	DATE:	2ND CHK:	DATE:

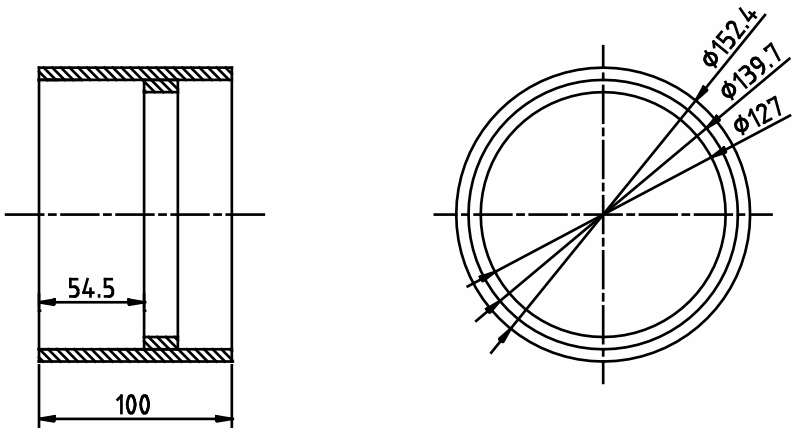

MATERIAL IS PREVIOUS 6"OD 5.5"ID 304 S.S. TUBE
CUT REMAIN 4" LENGTH

ALL DIMENSIONS ARE IN mm

THIRD ANGLE PROJECTION	WANG NMR INC 550 N CANYONS PARKWAY, LIVERMORE, CA 94550		
NAME: COLD MASS			
DWG #: MICE – C007C2		SHT 1 OF 1	
MATERIAL: 304 S.S.		QTY	8
DWN BY: XU	DATE: JAN 26,2008	SCALE: TO FIT	DWG SIZE:
1ST CHK:	DATE:	2ND CHK:	DATE:

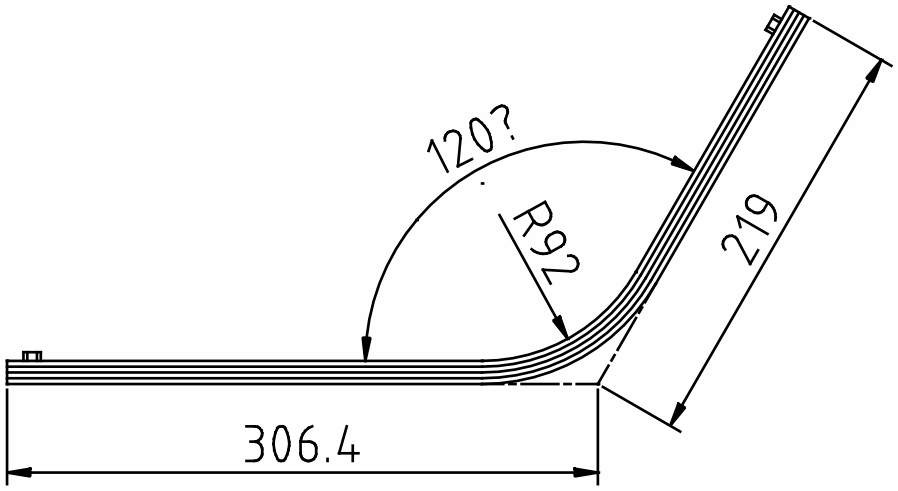

1/8" THICK 1.2" WIDTH 20" LENGTH OFHC 4 SHEETS

ALL DIMENSIONS ARE IN mm

THIRD ANGLE PROJECTION	WANG NMR INC 550 N CANYONS PARKWAY, LIVERMORE, CA 94550		
NAME: COLD MASS HEAT INTERCEPT			
DWG #: MICE – C007C		SHT 1 OF 1	
MATERIAL:		QTY	
DWN BY: XU	DATE: DEC 12,2003	SCALE: TO FIT	DWG SIZE:
1ST CHK:	DATE:	2ND CHK:	DATE:

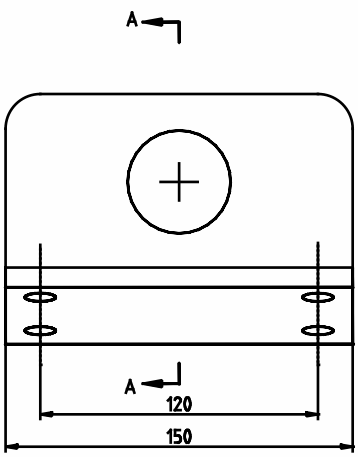

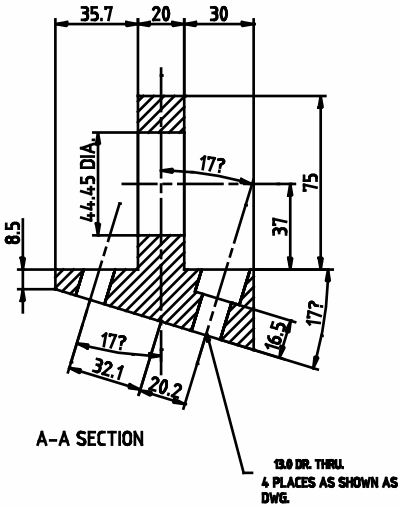

NOTES:
1) DIMENSIONS ARE IN mm
2) MATERIAL IS 316 S.S.
3) QTY. 8

ALL DIMENSIONS ARE IN mm
TOLERANCES: DECIMALS XXX=±.005 XX=±.01 X=±.1
ANGLES ±.5°
CONCENTRICITY ±.1 TOTAL INDICATION RUN OUT
PERPENDICULAR ±.05 (UNLESS OTHERWISE SPECIFIED)

THIRD ANGLE PROJECTION

WANG NMR INC
550 N CANYONS PARKWAY, LIVERMORE, CA 94550

NAME: COLD MASS SUPPORT BRACKET			
DWG #: MICE – C007B		SHT 1 OF 1	
MATERIAL:		QTY	16
DWN BY: XU	DATE: DEC 10,20	SCALE: TO FIT	DWG SIZE:
1ST CHK:	DATE:	2ND CHK:	DATE: