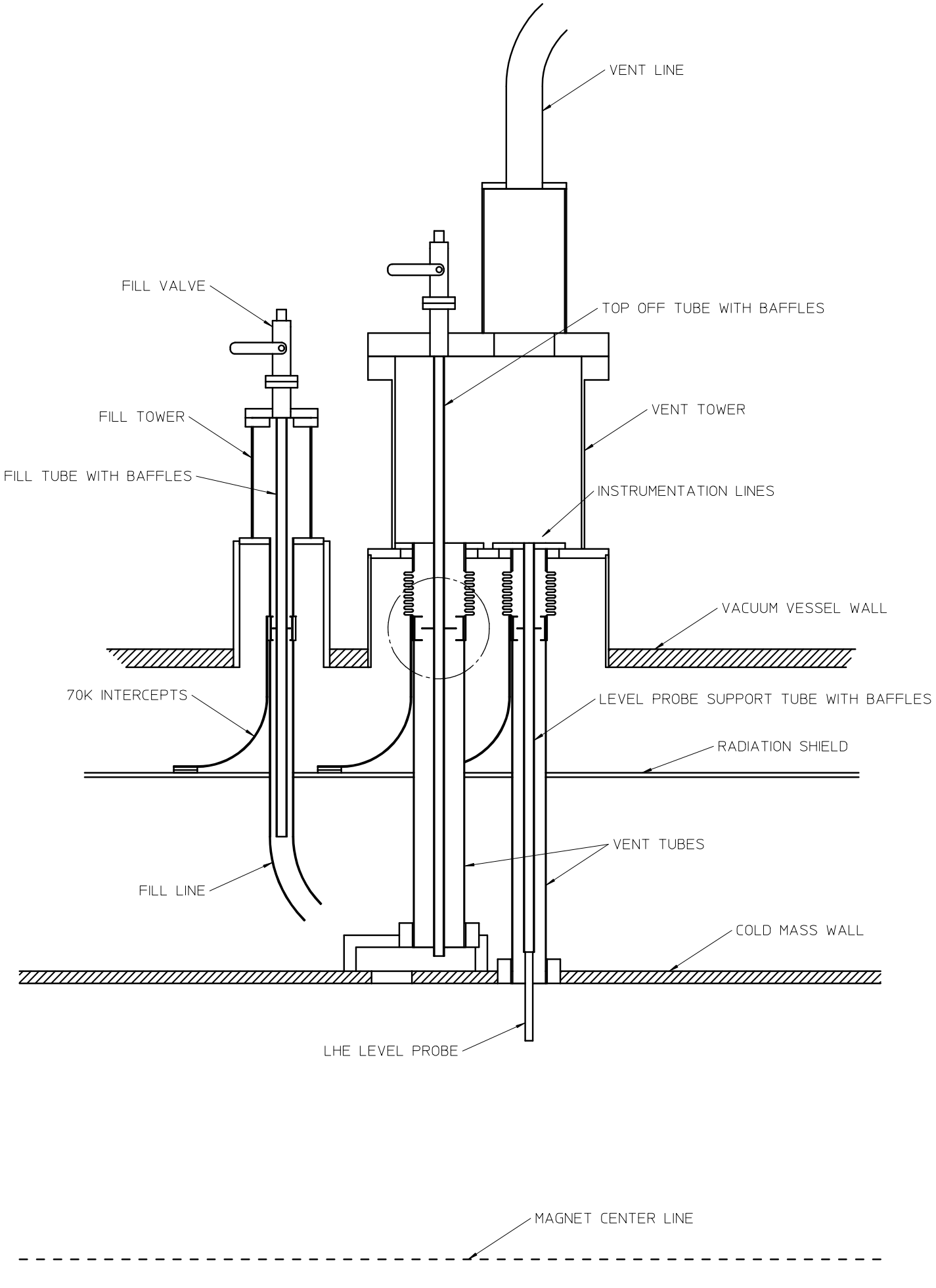MODIFIED CONFIGURATION