LAWRENCE BERKELEY NATIONAL LABORATORY

FINAL ENGINEERING DESIGN FOR MICE SPECTROMETER SOLENOID MAGNETS LBL P. O. 6806258

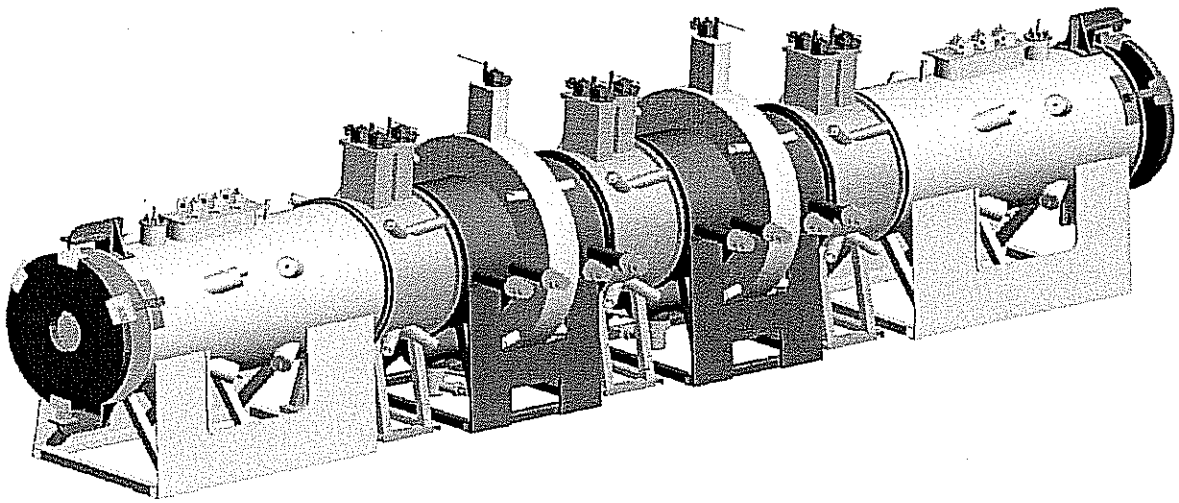

SUBMITTED BY : WANG NMR. INC.
550 NORTH CANYONS PARKWAY
LIVERMORE, CA. 94551

DATE : September 6, 2006

PHONE: 925-443-0212 , FAX : 925-443-0215
E-mail : SALE@WANGNMR. COM

*The data contained in pages all of this DESIGN DOCUMENTS have been submitted in confidence and contain trade secrets and/or privileged or confidential TECHNICAL information, and such data shall be used or disclosed only for P. O. purposes, LBL and the Government shall have the right to use or disclose the data herein to the extent provided in the contract.

Wang NMR, Inc.

550 North Canyons Parkway , Livermore, Ca. 94551

Proprietary

Table of Content

CHAPTER I

INTRODUCTION TO MICE SOLENOID COIL SYSTEM

CHAPTER II

MICE Detector Spectrometer Solenoid Coil Assembly Design

II-1. Coil Design of on-axis Field Profile and Peak Field on Conductor

II-2. Conductor Design, Ic-Bc, Operating Current and Load Line (LBL task)

II-3. Insulation Design of Conductor, Turn-to-Turn, Layer-to-Layer, and of Coil to Ground

II-4. Coil Winding Pack Design and Design of Coil Former

II-5. Calculation of the Axial Forces and Axial Magnetic Pressure

II-6. Finite Element Stress Analyses for Coil and Coil Former

II-7. Coil Former Fabrication and Quality Control

II-8. Coil Former Insulation Installation and Ground-Plane Hi-Pot Testing

II-9. Coil Winding Instruction and Short Checking For Turn-to-Turn and Layer-to-Layer

II-10. Coil Banding and Coil Banding Insulation

II-11. Coil Former Reinforcement Design

II-12. Design of Conductor Joints and Voltage Tap

II-13. Design of Superconducting Feedthrough

II-14. Passive Magnet Protection System

II-15. 3-D Magnet Quench Analyses for MICE Tracker Magnet

II-16. Fringing Field Calculation and Evaluation of Effect on HiTc Lead

II-17. Fringing Field Calculation and Effect on Cryocooler Cold Head

CHAPTER III

DESIGN OF CRYOSTAT ASSEMBLY

III-1. Helium Vessel

III-2. Design of Conduction-Cooled Thermal Shield

III-3. Vacuum Vessel and its support assembly

III-4. Service Tower Design,Design of Neck Tube for Cryogen Feed and Quench Vent

III-5. Cold Shippable Cold Mass Support Design

III-6. Cryogen Free Cryogenic Design, Hi-Tc Current Leads and Crycooler Specifications (see Drwg MICE-crycool-001)

III-7. _Heat leak calculations of 80k shield

III-8. Heat Leak to the 4.2K Coil Helium Vessel

III-9 Additional heat leak estimation if sleeve tube is used to assemble / disassemble a pulse tube cryocooler

III-10 Estimation of Required Cryogens For Cooldown

Proprietary

III-11 Design and Calculation of Cold Shippable Requirement for Cold Mass Suspension (See Fig. III-11-1)

III-12 Design of liquid helium recondensing system

III-13 Instrumentation Design and Feedthrough Design

III-14 Design of Sleeve and Installation of cryocooler

CHAPTER IV

QA Plan, Fabrication Plan and Inspection Plan

IV-1 MICE Solenoid QA Plan

IV-2 Superconductor Fabrication and Inspection Plan

IV-3 6061T6 Bobbin Fabrication and Inspection Plan

IV-4 Coil ground plan insulation installation and Inspection plan

IV-5 Coil winding plan and inspection plan

IV-6 Coil banding, Banding insulation, and Inspection plan

IV-7 Installation of Reinforce Aluminum Ring

IV-8 Magnet protection subassembly and Inspection Plan

IV-9 Superconducting Feedthrough fabrication and Inspection Plan

IV-10 Final Coil Assembly Coil and Inspection

IV-11 Helium Shell Installation Plan weld prep, welding procedure and leek check procedure

IV-12 Cold Mass Support Fabrication, installation and Inspection Plan

IV-13 Cryocooler Recondenser Fabrication and Cold head installation

IV-14 HiTc lead installation and inspection

IV-15 60K Thermal Shield installation and inspection plan

IV-16 300K Vacuum Vessel and Magnet Support System Installation and Inspection plan

CHAPTER V

Project Work Breakdown Structure (WBS) and Project Schedule

Proprietary

Table of Appendix

Appendix II-1-1	Engineering Design Drawing For Coil Structure
Appendix II-6-1	Finites Element Stress Analyses of Coil and Reinforce Rings
Appendix II-9-1	UNIT 1 – Winding Instructions
Appendix II-9-2	UNIT 2 – Winding Instructions
Appendix II-15-1	Analysis of Quench M1 Coil
Appendix II-15-2	Analysis of Quench M2 Coil
Appendix II-15-3	Analysis of Quench E1 Coil
Appendix II-15-4	Analysis of Quench C2 Coil
Appendix II-15-5	Analysis of Quench E2 Coil
Appendix III-1-1	ASME Code Calculation For MICE Cryostat
Appendix III-2-1	Engineering Design Drawing For 60 K Thermal Shield
Appendix III-3-1	Engineering Design Drawing For 300 K Vacuum Vessel
Appendix III-3-2	Engineering Design Drawing For Magnet Support System
Appendix III-11-1	Engineering Design Drawing For Cold Mass Support
Appendix D	QA Plan

Proprietary

CHAPTER I

INTRODUCTION TO MICE SOLENOID COIL SYSTEM

The purpose of the MICE spectrometer solenoid is to provide a uniform field for a scintillating fiber tracker, and thus, it is also called tracker solenoid. The uniform field is produced by a long center coil and two short end coils. Together, they produce 4T field with a uniformity of better than 1% over a detector region 1000 mm long and 300 mm in diameter. Throughout most of the detector region, the field uniformity is better than 0.3%.

In addition to the uniform field coils, we have match coil 1 and match coil 2. These two coils can be independently adjusted to match uniform field region to the focusing coil field. Figure I-1 shows the tracker solenoid cold mass design. Figure I-2 shows the cold mass support against 50 ton axial load. Figure I-3 shows the cryogen free system with cryocooler, recondenser, and Hi-Tc lead. Figure I-4 shows the vacuum vessel. Finally, Table I-1 shows the list of magnet parameters Drwg MICE- 0000 shows the final design of overall cross section if cryocooler installed in the sleeve. Drwg MICE-0000A shows the overall cross section if cryocooler is directly bolted to cold mass.

Table I-1 Tracker Magnet Parameters

	Coil package length = 2544 mm				
Parameter	**Match 1**	**Match 2**	**End 1**	**Center**	**End 2**
Coil length (mm)	**201.2**	**199.5**	**110.6**	**1314.3**	**110.6**
Coil inner radius (mm)	**258**	**258**	**258**	**258**	**258**
Coil thickness (mm)	**44.7**	**29.8**	**59.6**	**21.3**	**63.9**
Number of layers	**42**	**28**	**56**	**20**	**60**
Number of turns per layer	**120**	**119**	**66**	**784**	**66**
Coil overall current density (A mm^{-2})	**120.06**	**141.13**	**139.84**	**149.04**	**148.64**
Coil current I (A)	**214.2**	**251.8**	**248.9**	**265.3**	**265.3**
Coil self inductance (H)	**17.47**	**9.59**	**15.39**	**51.72**	**16.87**
Coil Stored Energy at I (MJ)	**0.4**	**0.3**	**0.48**	**1.83**	**0.59**
	Separately Powered		**Uniform Field Magnet S**		

* **The uniform field magnet coils in series have a self inductance of 78 H.**

Proprietary

Fig I-1 Tracker Solenoid Cold Mass

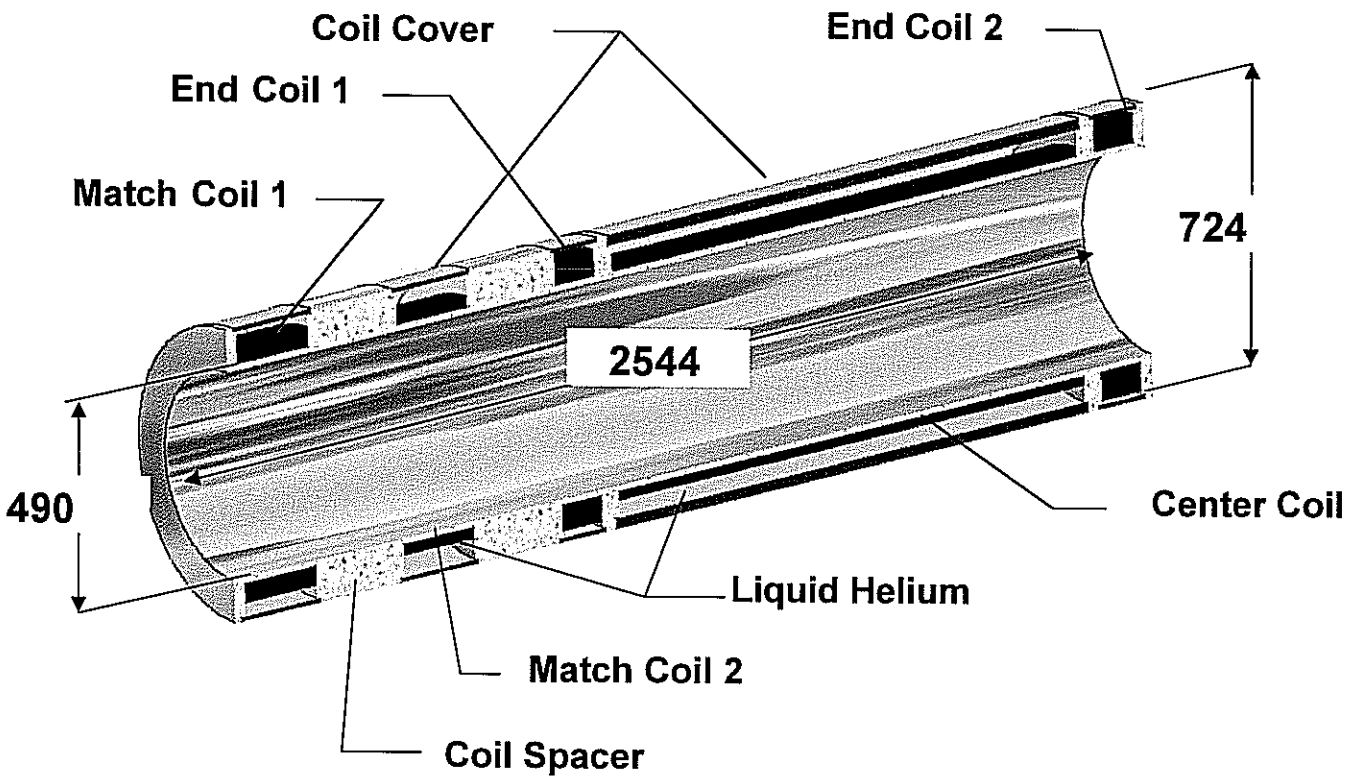

The two end coils and the center coil form the spectrometer magnet, which has a field good to 0.3 % in a region 300 mm in diameter and 1000 mm long.

Proprietary

Fig I-2 Tracker Solenoid 50 Ton Longitudinal Force Cold Mass Support System

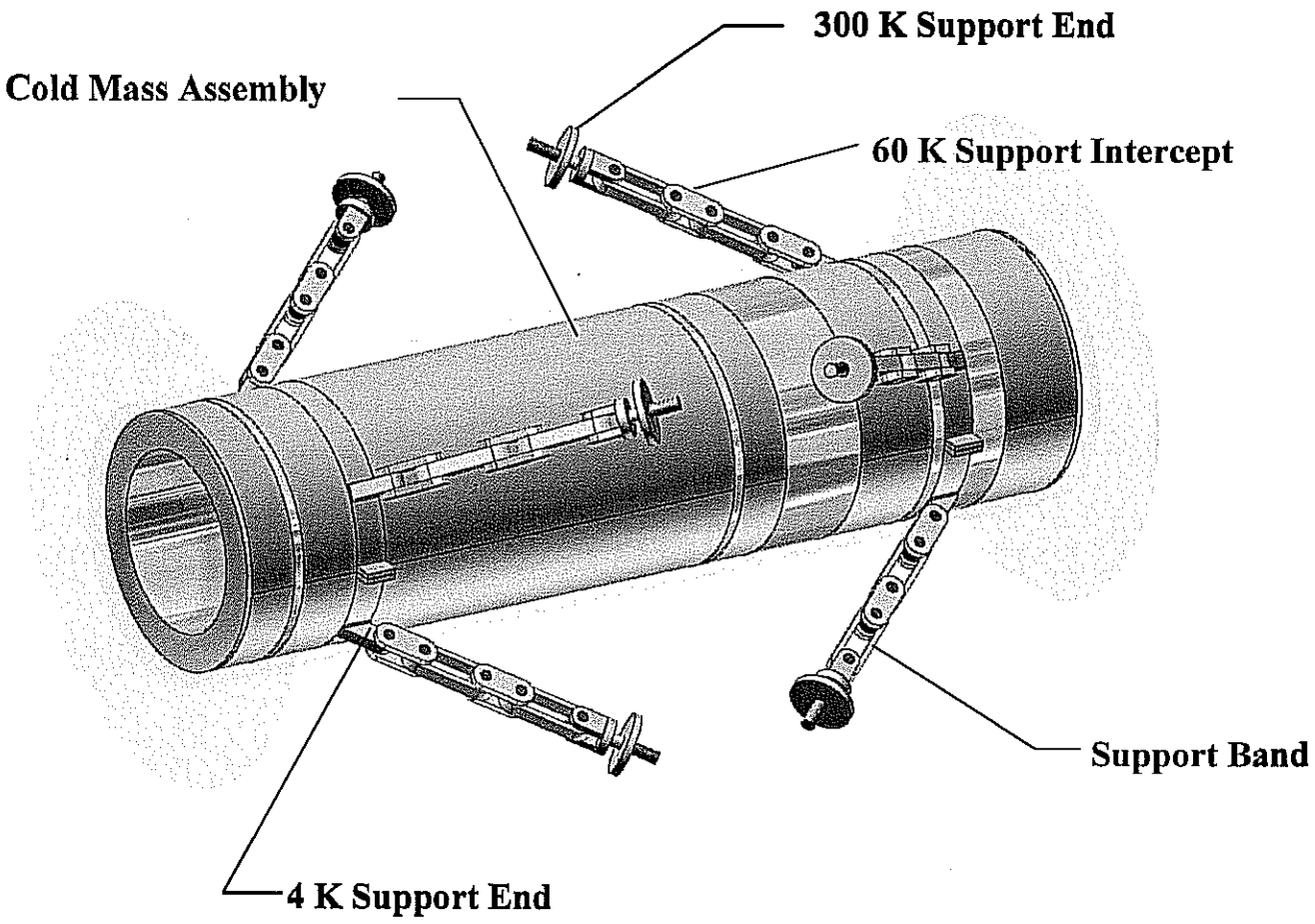

Proprietary

Fig I-3 Tracker Magnet Cold Mass, Coolers Cryogenic Distribution System

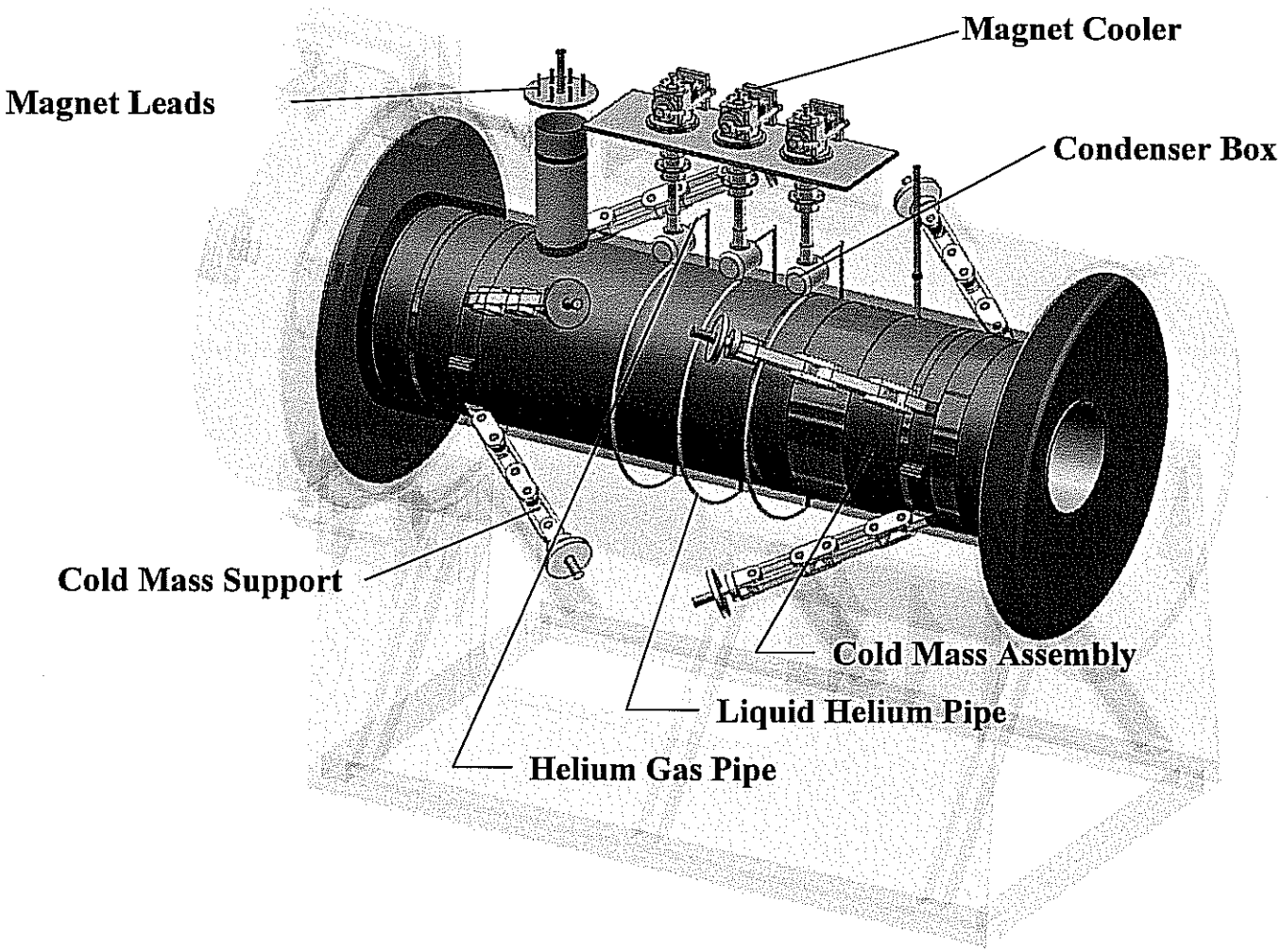

Proprietary

Fig I-4
Tracker Magnet Vacuum Vessel and Iron Shield

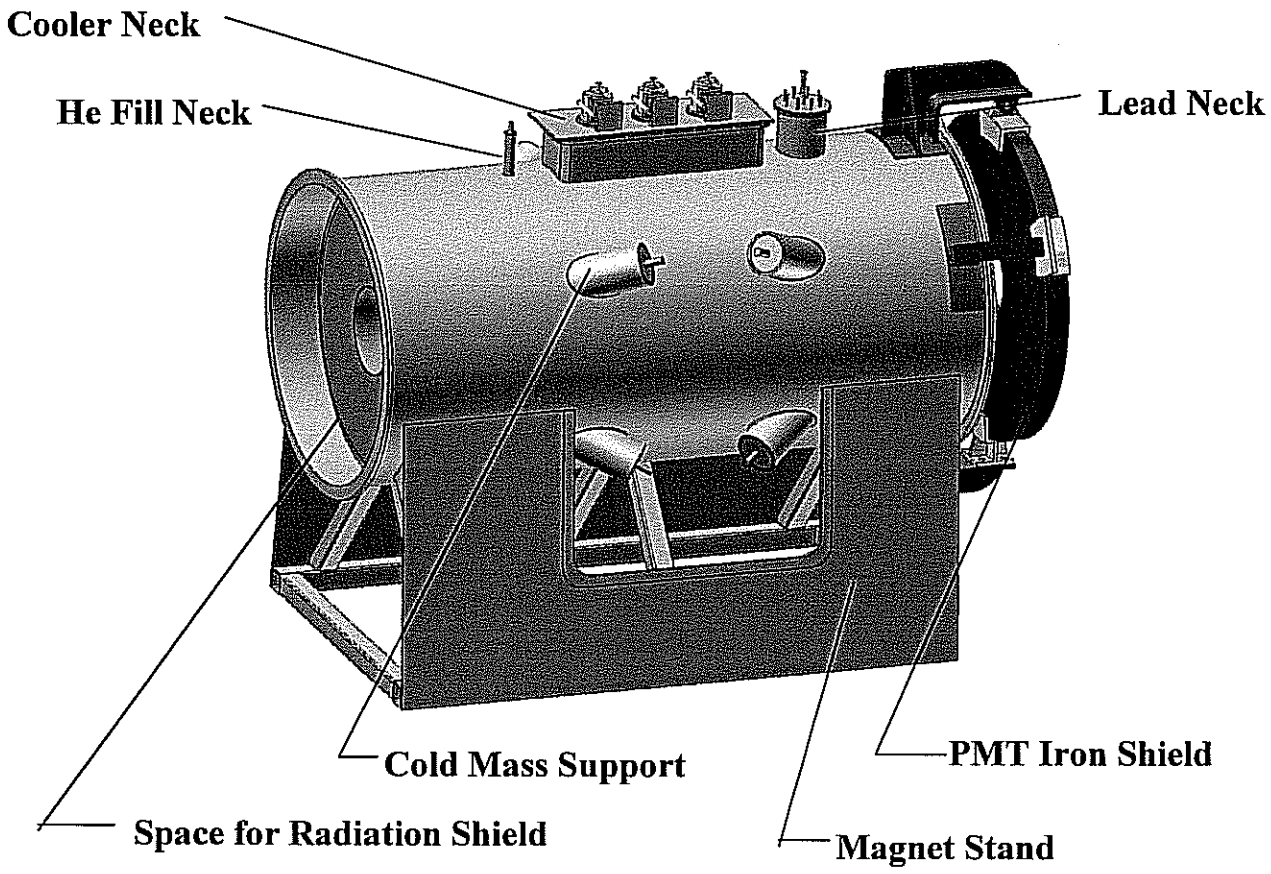

Proprietary

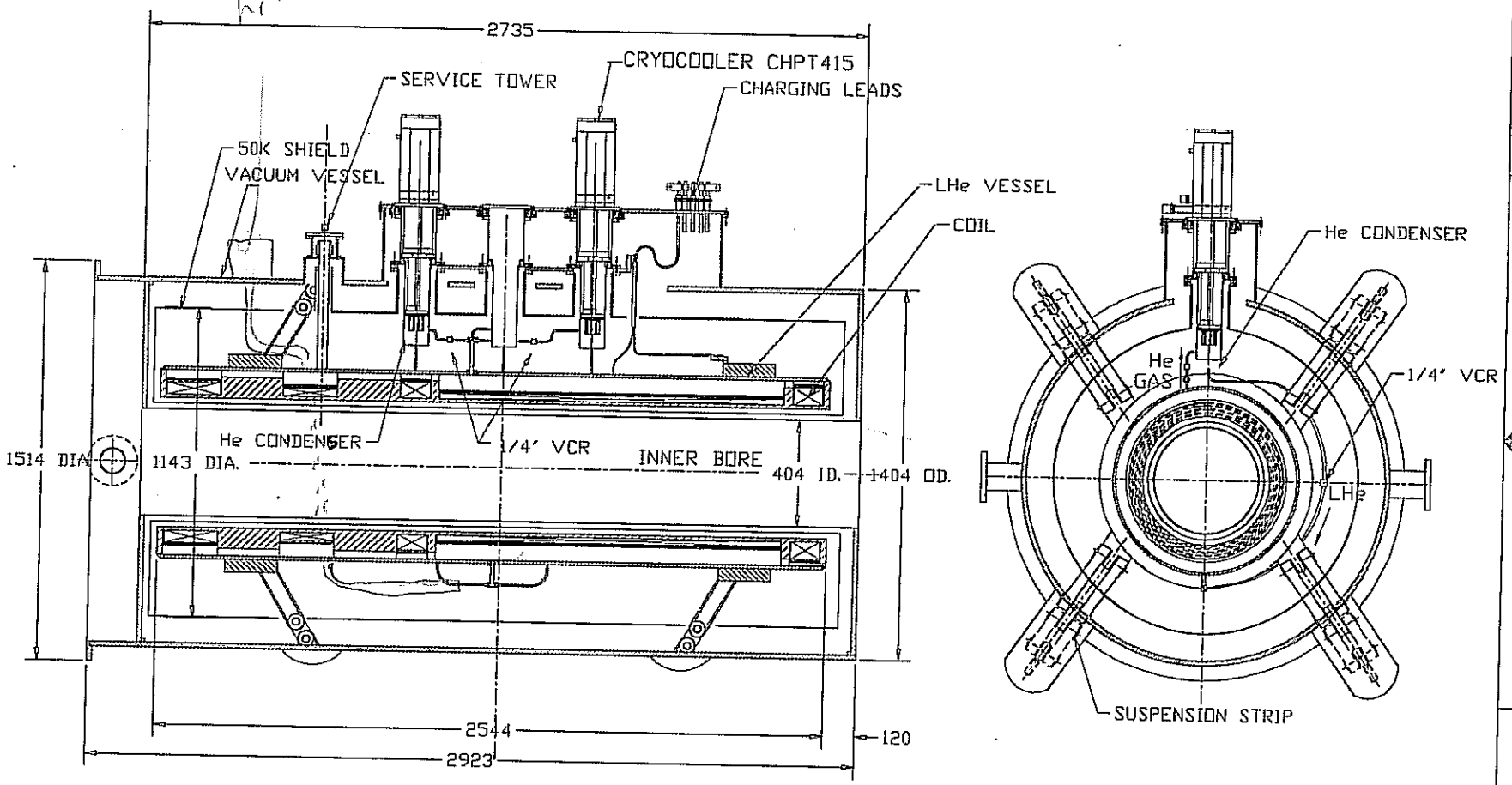

NOTES:
1) DIMENSIONS ARE IN mm

WANG NMR, INC.
MICE TRACKER MODULE
4.5T TRACKER
SOLENOID MAGNET
D
MICE-0000

Proprietary

Proprietary

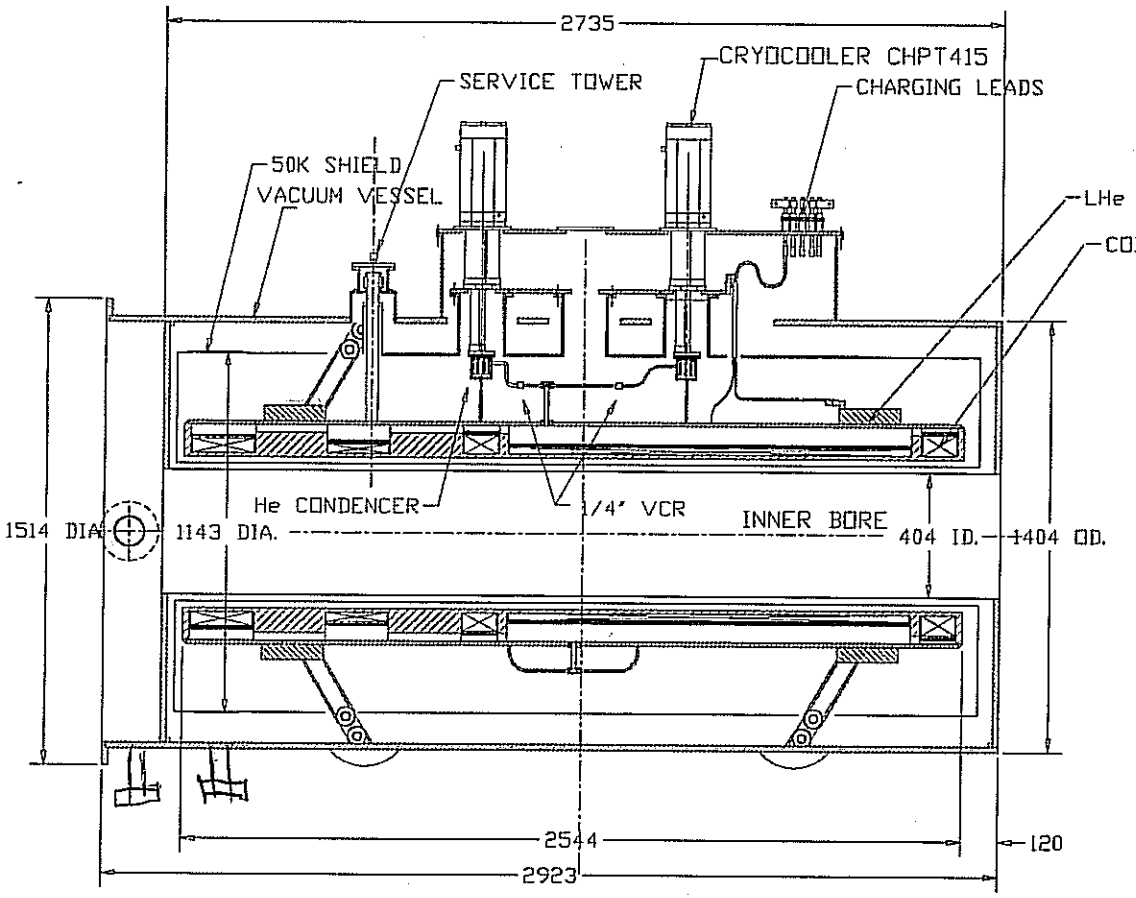

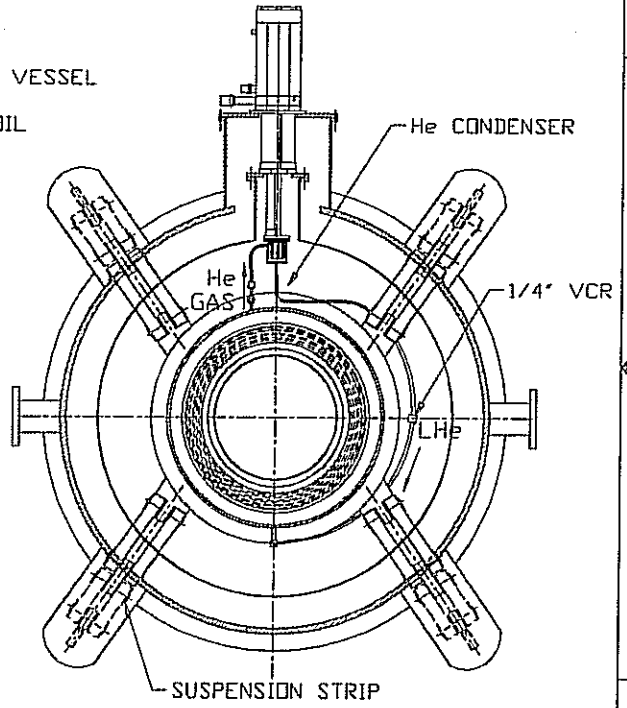

NOTES:
1) DIMENSIONS ARE IN mm

WANG NMR, INC.
530 North Canyons Parkway, Livermore, CA 94550

MICE TRACKER MODULE
4.5T TRACKER
SOLENOID MAGNET

D | MICE-0000 A

DO NOT SCALE

CHAPTER II

MICE Detector Spectrometer Solenoid Coil Assembly Design

Engineering design drawing for coil assembly is shown in Appendix II-1

II-1. Five Coil Design, on-axis Field Profile and Peak Field on Conductor

The solenoid consists of five coils; match coil 1 (M1), match coil 2 (M2), the end coil 1 (E1), the center coil (C), and the end coil 2 (E2). The end coil 1, the center coil, and the end coil 2 are connected in series and form the spectrometer solenoid. The end coil 1 and the end coil 2 can be fine-tuned and adjusted to ensure spectrometer solenoid field uniformity of 1% over detector volume of 300 mm diameter by 1000 mm long. On the other hand, match coil 1 and match coil 2 are each an independently-adjustable coil. These match coils will be tuned to match muon beam between spectrometer coil set and the focusing coil set.

The magnet design is shown in Table II-1-1.

The central field profile is shown in Figure II-1-1. The peak field on conductor in each coil is shown in Table II-1-1 and Fig II-1-2.

Proprietary

Table II-1-1 MICE MAGNET DESIGN

PARAMETER	MATCH1	MATCH2	END1	CENTER	END2
LBL ORIGINAL SPEC.					
R1 (MM)	258	258	258	258	258
COIL THICKNESS (MM)	46.2	30.8	61.6	22	68.2
R2 (MM)	304.2	288.8	319.6	280	326.2
MID-Z POSITION	124	564	964	1714	2464
COIL LENGTH (MM)	198	197	110	1294	110
Z1(MM)	25	465.5	909	1067	2409
Z2(MM)	223	662.5	1019	2361	2519
# OF LAYER	42	28	56	20	62
# OF TURN PER LAYER	120	119	66	784	66
WANG NMR DESIGN: (MM)					
CONDUCTOR INSUL THK	1.0000	1.0000	1.0000	1.0000	1.0000
CONDUCTOR INSUL WIDTH	1.6500	1.6500	1.6500	1.6500	1.6500
LAYER THICK(+2.5 MIL)	1.0643	1.0643	1.0643	1.0643	1.0643
TURN WIDTH (+ 1 MIL)	1.6764	1.6764	1.6764	1.6764	1.6764
SP	56.0499	56.0499	56.0499	56.0499	56.0499
DESIGN CURRENT	214.2	251.8	249.5	265.9	265.2
COIL THICK NESS	44.699	29.799	59.599	21.285	65.984
COIL LENGTH	201.168	199.492	110.642	1314.298	110.642
B PEAK (T)	4.43	4.01	5.90	4.19	6.37
MID R POSITION (LBL)	281.10	273.40	288.80	269.00	292.10
MID R POSITION (Wang)	280.35	272.90	287.80	268.64	290.99
Delta Mid-R (mm)	0.75	0.50	1.00	0.36	1.11
DESIGN COIL DIMENSION (MM)					
R1(MM)	258.000	258.000	258.000	258.000	258.000
R2	302.699	287.799	317.599	279.285	323.984
Z1	23.416	464.254	908.679	1056.851	2408.679
Z2	224.584	663.746	1019.321	2371.149	2519.321
SIDE WALL INSULATION (.125" G-10 + KAPTON)				3.2 MM	
COIL MANDREL INSULATION				1.0 MM	
(2 LAYERS G-10 0.015" + 2 LAYERS KAPTON 0.005")					
BOBBIN DESIGN:					
R1(MM)	257	257	257	257	257
R2					
Z1	20.22	461.05	905.48	1053.65	2405.48
Z2	227.78	666.95	1022.52	2374.35	2522.52
COIL BOBBIN DESIGN IN INCH					
R1(INCH)	10.118	10.118	10.118	10.118	10.118
R2					
Z1	0.796	18.152	35.649	41.482	94.704
Z2	8.968	26.258	40.257	93.478	99.312

Proprietary

Fig II-1-1

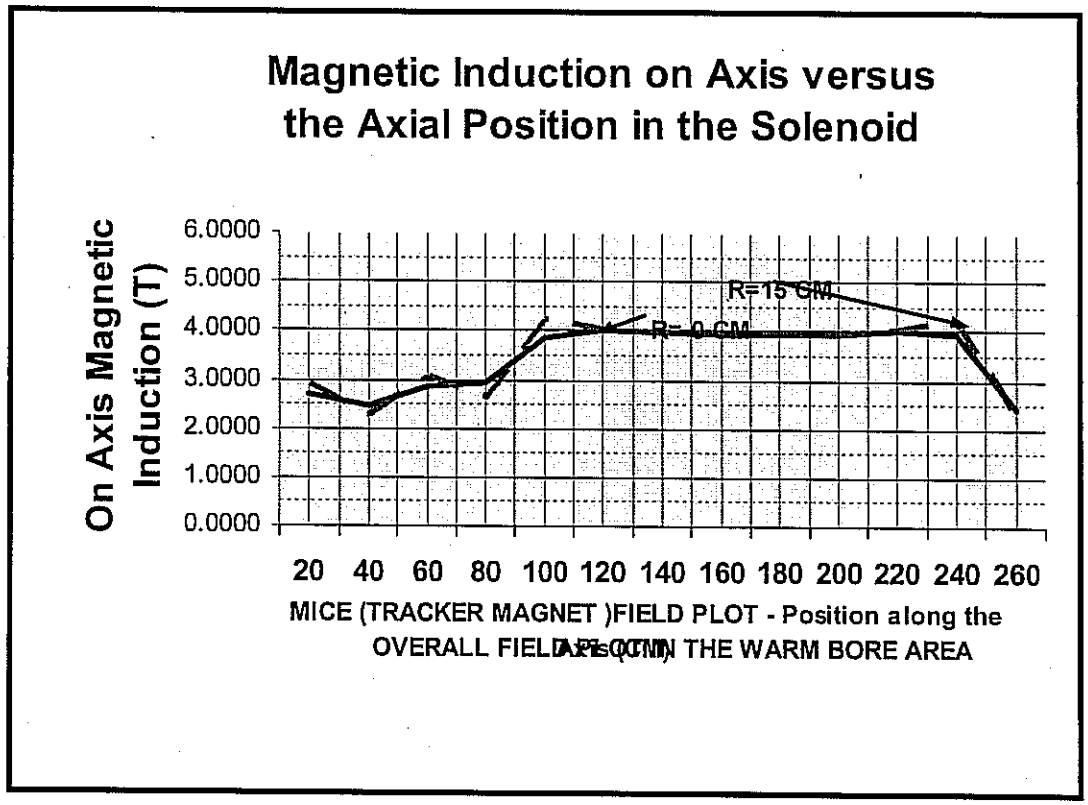

Proprietary

Fig II-1-2

Tracker Solenoid Peak Field

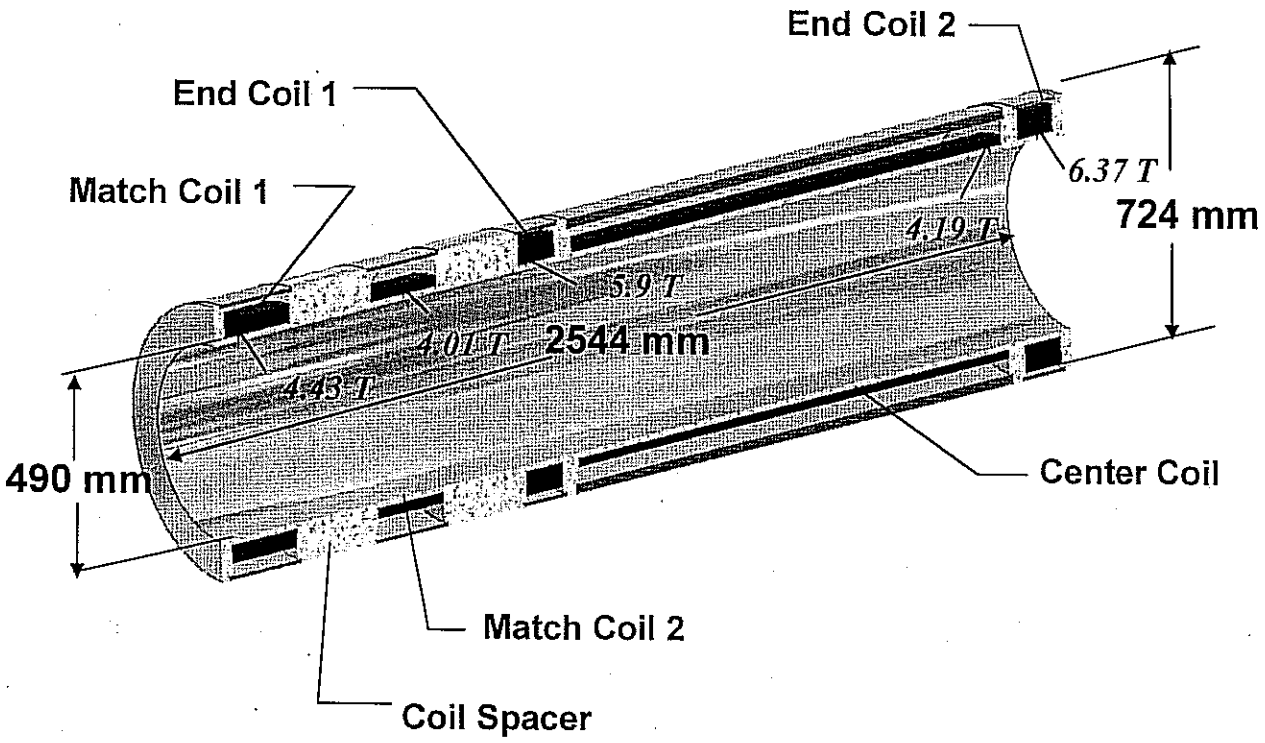

Proprietary

II-2. Conductor Design, Ic-Bc, Operating Current and Load Line (LBL task)

(A) Conductor Design

LBL has designed and procured a rectangular conductor with formvar insulation (dimension: 1.0 mm by 1.65 mm). Its copper to superconductor ratio is 3.9±0.4. The number of filaments is 222. The filament diameter is 41 μ. The filament twist pitch is 19±3 mm. The conductor crossection is shown in Figure II-2-1. Six spools of MICE conductors were delivered to LBNL in May 2006. The QC on the mechanical properties are shown in Table II-2-1. It will be delivered to Wang NMR Inc. in July 2006.

(B) Ic-Bc

The Ic-Bc electrical specification of the superconductor is > 760A at 4.2K and 5T. The QC test on each spool is shown in Table II-2-2. A typical short sample test is shown in Figure II-2-2, which is further plotted in Figure II-2-3.

(C) Operating Current, Load Line, and Temperature Margin

As shown in Figure II-2-3, the load lines for each of five coils in spectrometer solenoid are shown to have temperature margin of more than 2K.

Fig II-2-1 Conductor Cross-section

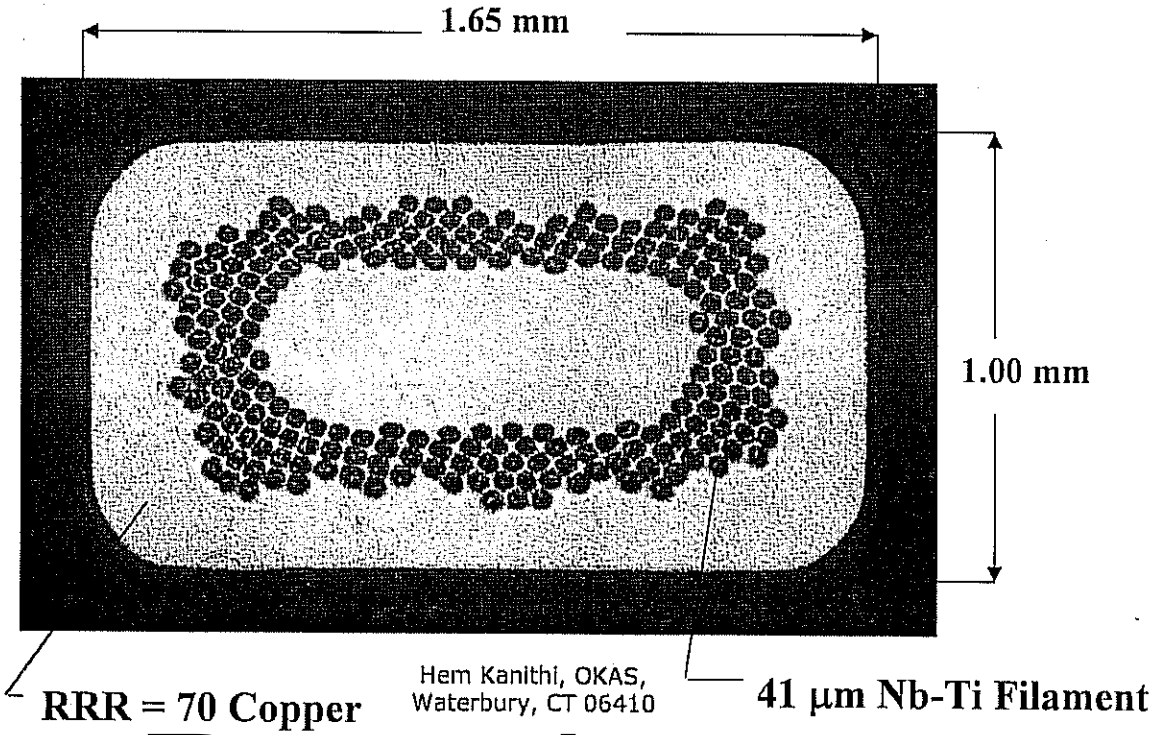

Hem Kanithi, OKAS,
Waterbury, CT 06410

Proprietary

Table II-2-1
Conductor Mechanical Characteristics

Both tests look for filament breakup and defects in the filament bundle.

Piece ID	Length, meters	Weight, kgs	Insul Thk	Insul Width	Bend test	Eddy current
Spec.			0.97-1.00	1.62-1.65	pass	Pass
36680	32964	393.7	0.995	1.644	pass	pass
36679	33140	396.5	0.996	1.645	pass	pass
36761-1	27363	329	0.994	1.646	pass	pass
36761-2	5366	64.7	0.994	1.646	pass	pass
36760-1-1	15218	182.2	0.994	1.644	pass	pass
36760-1-2	7440	89.2	0.994	1.645	pass	pass
Total	**121491**	**1455**				

Hem Kanithi, OKAS,
Waterbury, CT 06410

The dimensions are acceptable.

Table II- 2-2
Conductor Electrical Characteristics

	End A			End B			
Piece ID	Cu/Sc	Ic(5T)	n(5T)	Cu/Sc	Ic(5T)	n(5T)	Billet RRR
Spec.	3.5-4.3	>760	>35	3.5-4.3	>760	>35	~80
36680	3.90	826	50	3.74	955	57	75
36679	3.55	868	54	3.70	826	51	71
36761-1	3.65	867	49	3.83	872	49	91
36761-2	3.83	872	49	3.83	826	51	91
36760-1-1	3.84	793	56	3.71	824	57	73
36760-1-2	3.71	824	57	3.72	837	60	73

Hem Kanithi, OKAS,
Waterbury, CT 06410

The specified conductor critical current is >760 @ 4.2 K and 5 T.
The specified conductor n value is >35.
The specified conductor copper to S/C ratio is 3.9 ± 0.4.
The RRR values for the conductor copper are acceptable.

Proprietary

Fig II- 2-2

Typical OKAS Short Sample Test Plot

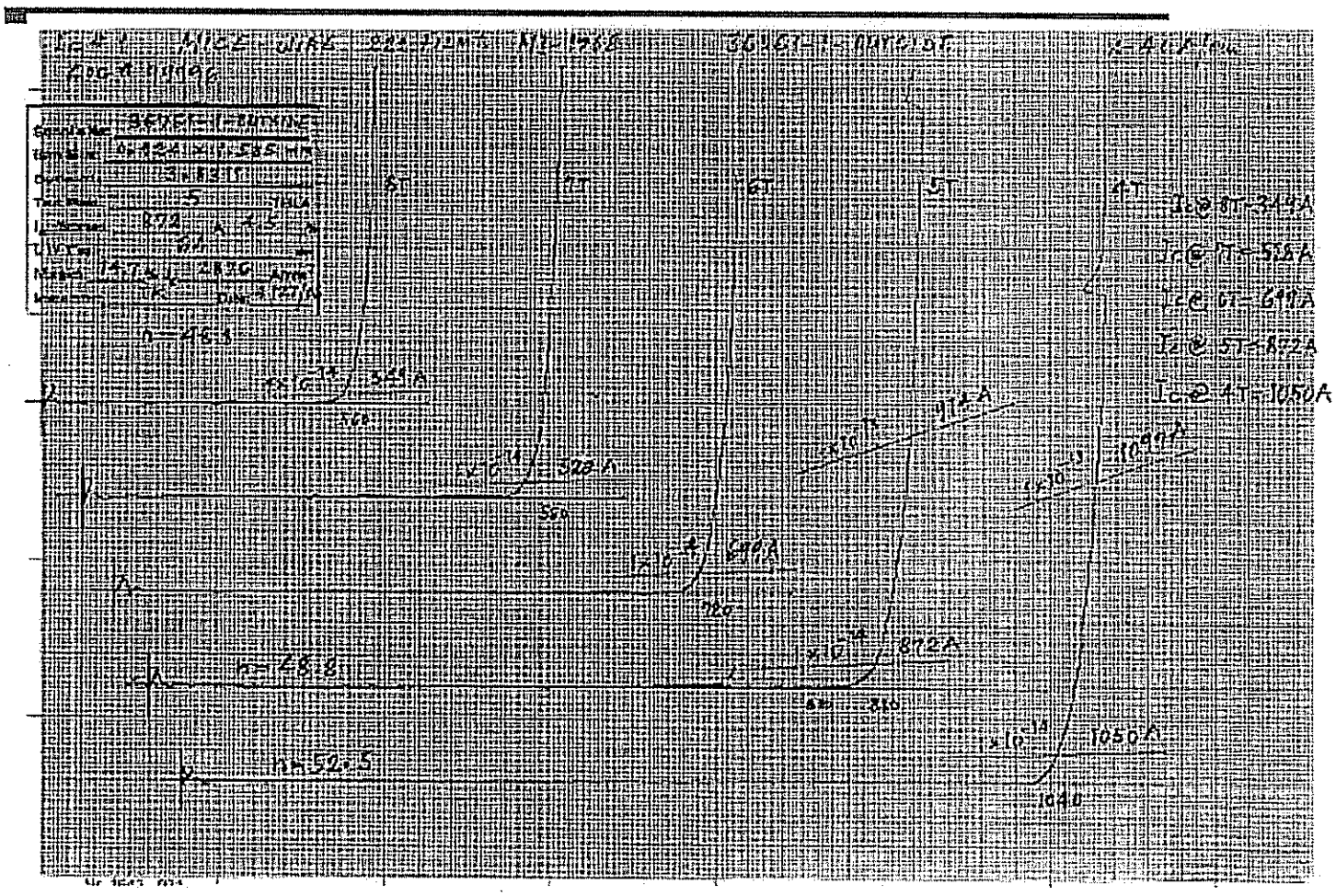

Hem Kanithi, OKAS,
Waterbury, CT 06410

Proprietary

Fig II- 2-3

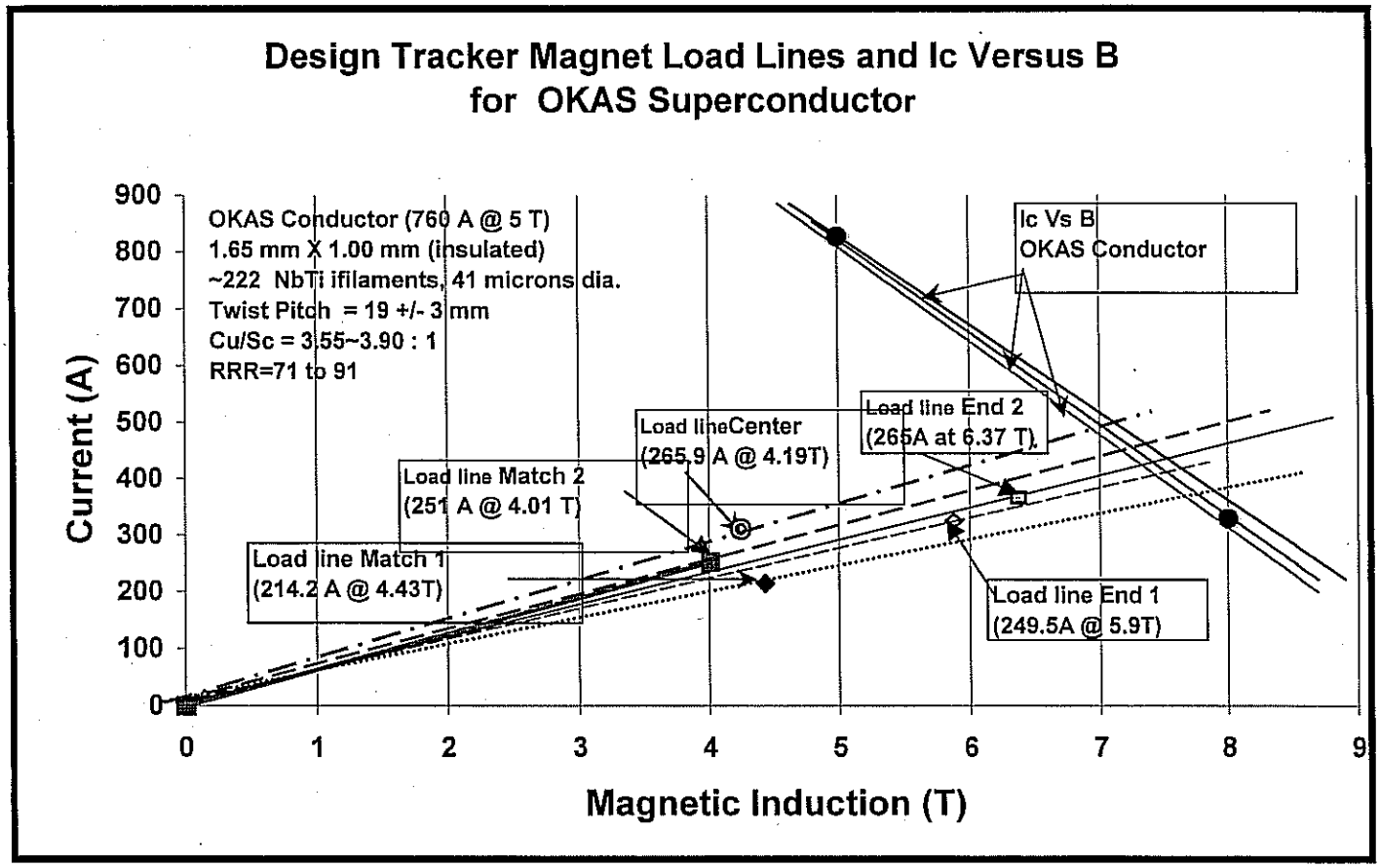

Proprietary

II-3 Insulation Design of Conductor, Turn-to-Turn, Layer-to-Layer, and of Coil to Ground

(A) Conductor insulation

The superconducting composite shall be insulated with formvar (0.001" or 0.025 mm thick) per NEMA standard MW-1000 section 18-C poly-vinyl formal resin/ class 10J/ heavy build. The insulated overall dimension of conductor is 1.00 mm by 1.65 mm, with corner radii in the range of 0.2 mm to 0.475 mm.

(B) Turn-to-Turn Insulation

The turn-to-turn insulation including gap will be 0.050 mm (0.002") thick formvar.

(C) Layer-to-Layer insulation

The layer-to-layer insulation will be 0.0625 mm (2.5 mil) thick fiberglass cloth (E glass) plus 0.050 mm (0.002") formvar.

(D) Coil-to-ground insulation

Coil to mandrel will be insulated with 2 layers of Kapton (0.002" x 2) and two layers of G-10 sheets (0.018" x 2). Coil to the coil former side wall will be insulated with 0.125" G-10 and 0.002" Kapton.

These insulation design will be meggered test to satisfy 5 kV and 200 μA leakage current requirement.

II-4. Coil Winding Pack Design and Design of Coil Former

(A) Control winding density

During each layer winding, winding density (# of turn per cm) will be controlled to assure field uniformity.

(B) Coil layer and potting epoxy

2.5 mil thick fiberglass will be used for layer to layer winding. Stycast 2850 FT will be used to wet wind each coil layer.

(C) Aluminum Coil Banding to Support Coil Force

Outer most coil layer will be insulated with one layer kapton and two layers G-10 totaling 1 mm thick. A high strength aluminum alloy 6061T6 banding will be used to

Proprietary

band each coil. This will provide additional hoop force support and will ensure coil is tightly packed when it is cool-down.

(D) Conductor Joints and Voltage Tap

After banding, conductor joints will be made by lapping joints over at least 24" long. All joints will be carefully insulated, supported, and epoxy potted in a G-10 supporting plate. Heating due to conductor joints must be as small as possible to keep overall refrigerator load within cryocooler capability. If necessary, superconducting joints will be made to eliminate the heating due to joints. Voltage taps will be made at each joints.

(E) Coil leading superconductors

In the helium space, each coil leading conductors (in and out) will be soldered with at least three times superconductor/ copper to avoid burn out due to vapor locking. In the vacuum space, each coil leading conductors will be soldered with at least five time superconductor/ copper to avoid burn out. The leading conductor lengths should be kept as short as possible. All leading conductor must be well-insulated and well-supported.

(F) The inner coil radius (R1)

The inner coil radius of all coils will be 258 mm or 10.158" (R1).

(G) The turn-to-turn width

Adding a turn-to-turn gap of 0.001" to conductor width 1.65 mm (0.065"), the design turn-to-turn width will be 0.001" + 0.065" = 0.066".

(H) The layer-to- layer thickness

The layer-to-layer insulation will be 0.0025" fiberglass cloth, thus layer-to-layer thick will be 0.0025"+0.0394" = 0.0419".

The winding build ($\Delta R \times \Delta Z$), the number of layer, L, and the number of turns per layer, N are shown in Table II-4-1.

Proprietary

Table II-4-1 COIL DESIGN PARAMETERS

COIL	MATCH 1	MATCH 2	END 1	CENTER	END 2
# of layer (L)	42	28	56	20	62
# of turns/ layer (N)	120	119	66	784	66
Radial Coil Build (ΔR)	1.7598"	1.1732"	2.3464"	0.838"	2.5978"
Axial Coil Build (ΔZ)	7.92"	7.854"	4.356"	51.744"	4.356"
Inner Coil Radius (R1)*	10.158"	10.158"	10.158"	10.158"	10.158"
Outer Coil Radius (R2)*	11.917"	11.331"	12.504"	10.996"	12.755"
Mean Coil R* (mm) (Current Center)	280.35 mm	272.9 mm	287.8 mm	268.65 mm	290.94 mm
Mean Coil Z** (mm) (Axial Current Center)	124±1	564±1	964±1	1714±1	2464±1
Coil Inner Z1** (mm) (inch)	23.4 (0.921")	464.25 (18.278")	908.7 (35.776")	1056.85 (41.608")	2408.7 (94.831")
Coil Outer Z2** (mm) (inch)	224.6 (8.843")	663.75 (26.132")	1019.3 (40.130")	2371.15 (93.352")	2519.3 (99.185")

* Radial dimensions are measured from the magnetic axis.
** Axial dimensions are measured from cold mass cryostat end of match coil 1.

(I) Coil winding structure, coil former design, and coil axial groove width design

As shown in Figure I-1 and Table I-1, the coil former will have an inner radius of 245 mm (9.646") and an overall coil former length (cold mass length) of 2544 mm (100.157"). Since all five coils shall have a G-10 sidewall thickness of 0.125", the longitudinal (axial) distance of each coil winding pack is calculated as shown in Table II-4-1.

(J) Coil radial groove depth design

As shown in Table II-4-1, each coil shall have enough radial groove depth to allow for: (i) coil to mandrel insulation 0.040", (ii) coil radial build, (iii) banding and its insulation (0.250"), and (iv) 0.75" space reserved for precool line, or intercoil connection. In addition, the center coil has the thinnest build, we plan to install coil protection system (2.5" radial build) on the surface of center coil banding, as shown in Figure II-4-1. Thus, the outer radius of each winding groove will be 11.25" + 2.5" = 13.75" R. The coil former design is shown in drawing MICE-C001.

Proprietary

II-5. Calculation of the Axial Forces and Axial Magnetic Pressure

Radial field component, Br, generate axial magnetic force and pressure. Figure II-5-1 tabulates the total axial forces and maximum axial magnetic pressure for each coil.

Figure II-5-1. Axial Coil Force & Maximum Axial Pressure

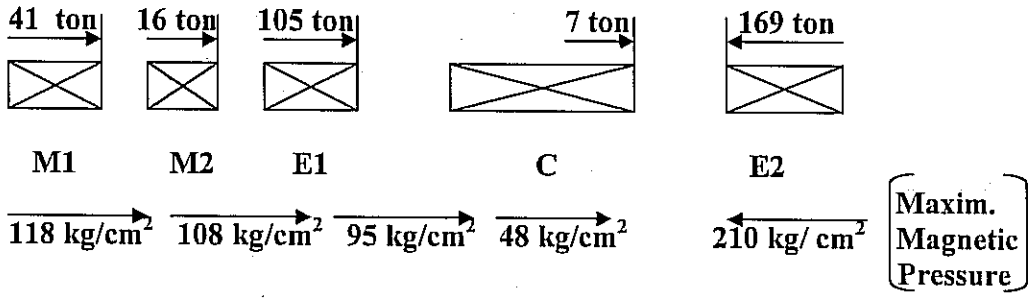

Therefore, E2 coil has maximum axial magnetic pressure of 210 kg/ cm^2.

II-6. Finite Element Stress Analyses for Coil and Reinforcement Rings

The coil forces consists of hoop forces and axial compressive forces. To set up finite element analyses and to compute hoop force and axial forces, we have computed the magnetic field component Bz and Br within the winding. The coil is divided into 25 axial-symmetric elements. The reinforcing cylinder is divided into 90 solid elements. Detail of finite element stress analyses are shown in Appendix II-6-1. The conductor stress in each coil is shown in Table II-6-1.

Table II-6-1 MAXIMUM COIL STRESS

	coil	hoop stress (kg/ cm^2)	compress stress (kg/ cm^2)
M_1	match 1	538.8	-182.5
M_2	match 2	643.3	-124.7
E_1	end 1	834.7	-298.2
C	center	818.2	-39.6
E_2	end 2	882.7	208.9

The Von Mise Stress of Reinforce ring is 960.6 kg / cm^2

II-7. Coil Former Fabrication and Quality Control

Coil former is made of forging 6061T6 aluminum. After forging, besides chemical composition analyses and heat treatment certification, it must be inspected for dimensional tolerance and for surface finish, deburring, and for cleaniness. Then, it will be leak check for a sensitivity of better than 1×10^{-10} torr-liter/ sec.
The before-machined drawing is shown in Drwg MICE-C001A. The final machined former is shown in Drwg MICE-C001

Proprietary

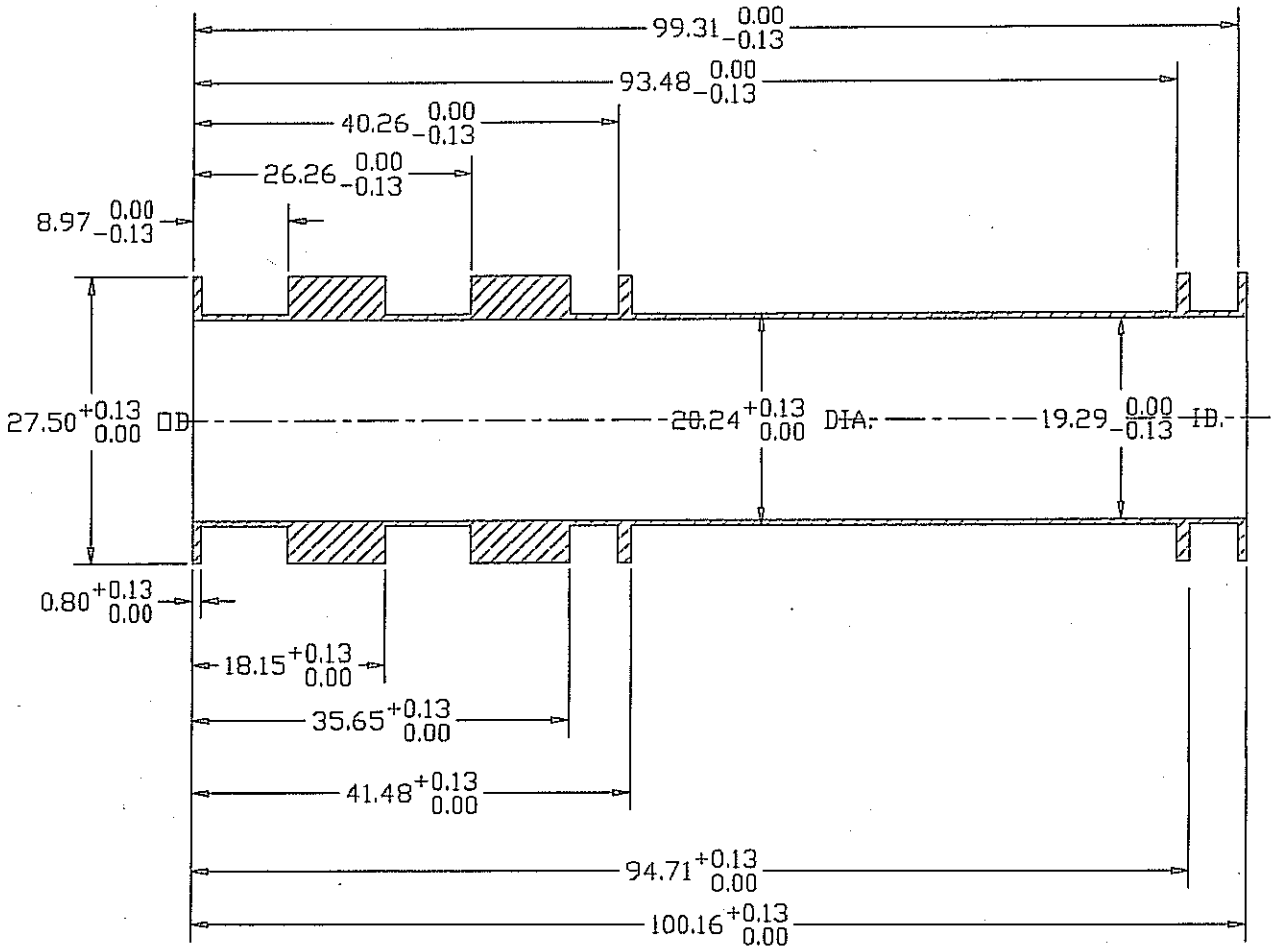

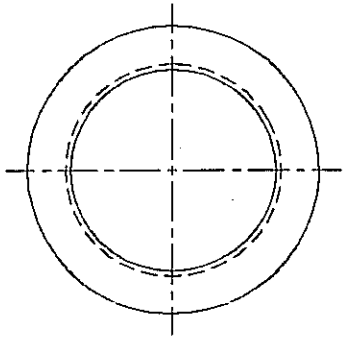

NOTES:
1) DIMENSIONS ARE IN INCHES
2) MATERIAL IS FORGING 6061T6 ALUMINUM
3) WORK: FORGING & ROUGHLY MACHINING WITH TOLERANCE AS SHOWN
4) QTY. 2

WANG NMR, INC.
330 North Canyons Parkway, Livermore, CA 94550

MICE TRACK MODULE
COIL FORM BEFORE
MACHINEING

D MICE-C001A

DO NOT SCALE

Proprietary

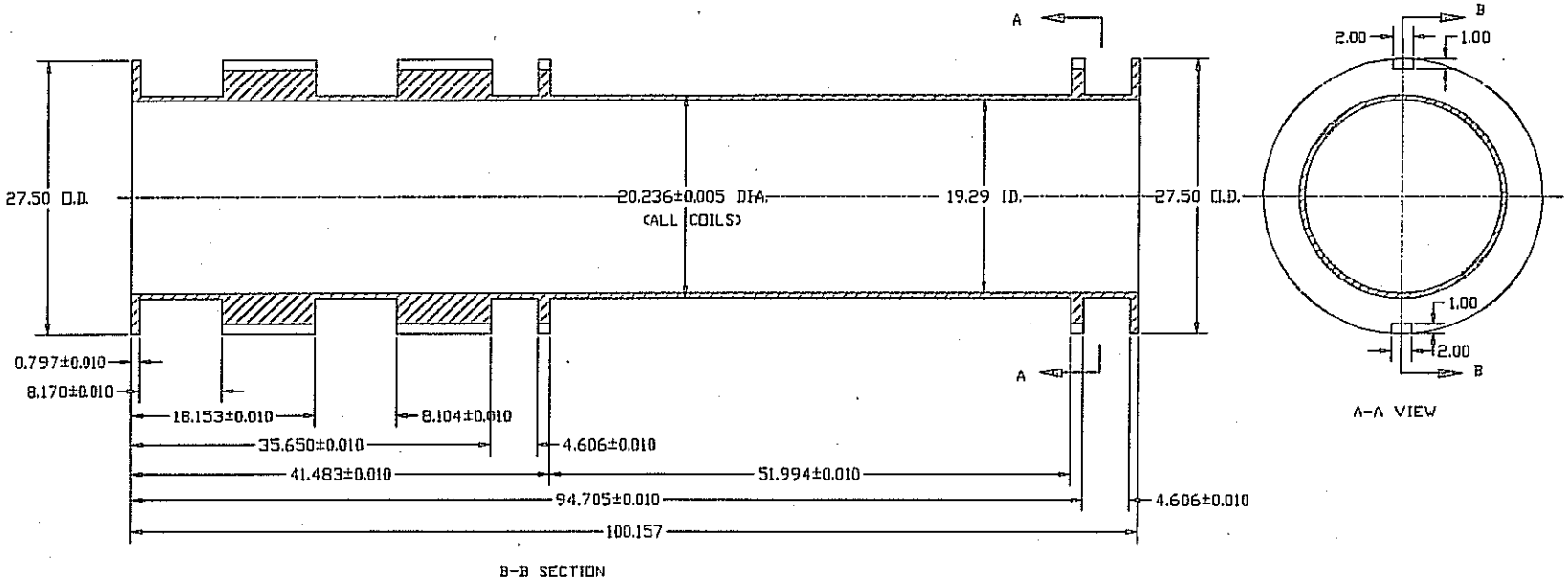

NOTES:
1) DIMENSIONS ARE IN INCHES
2) MATERIAL IS FORGING 6061T6 ALUMINUM
3) QTY. 2

UNLESS OTHERWISE SPECIFIED TOLERANCES:
.XXX ± .003
.XX ± .02

WANG NMR, INC.
938 North canyond Parkway, Livermore, CA 94550

MICE TRACK MODULE
COIL FORM

D | MICE-C001

DO NOT SCALE

Proprietary

II-8. Coil Former Insulation Installation and Ground-Plane Hi-Pot Testing

As shown in Drwg MICE-C002, the side wall of the coil former will be insulated with 0.125" G-10 plus 2 layers of kapton (0.002" thick) and one layer of artificial reconstituted mica (0.003") as slip plane. The hub of coil former will be insulated with 0.015" thick G-10 plus two layers of kapton as ground plane insulation and one layer of mica as slip plane.

Coil former insulation will be meggered to 5 kV.

II-9. Coil Winding Instruction and Short Checking For Turn-to-Turn and Layer-to-Layer

(A) Planned use of superconductor is shown in Fig II-9-1

Since conductor joint will generate significant heating to 4.2K, it is important to minimize the number of joints.

(B) Winding instruction

Appendix II-9-1 and II-9-2 are the winding instruction with number of turns per layer and the dimensional quality control after each layer of coil winding. In addition, a constant current source is used to measure any change of coil resistance due to turn-to-turn short or layer-to-layer short. The short checking system is sensitive enough to check loss of fractional turn. A measurement of winding room temperature and control of room temperature is necessary to assist monitoring of small resistance change. Epoxy curing is also a factor affecting the small change of coil resistance. One must investigate and understand any decrease in coil resistance.

During the winding of each layer, the length of each 100 turns must be measured to make sure that turn density is kept constant and the number of turns per layer is maintained according to the coil design.

II-10. Coil Banding and Coil Banding Insulation

Outer most coil layer will be insulated with one layer mica (0.003"), two layers kapton (0.002"x2) and one layer of G-10 (0.015"). About 0.25" thick (total), high strength aluminum alloy banding, such as Al 6061T6 or 5052H38 Al will be used to band each coil. The banding will provide some hoop force support and will ensure coil is tightly packed when it is cooldown.

Proprietary

Proprietary

REVISIONS				
ZONE	REV.	DESCRIPTION	DATE	APPROVED

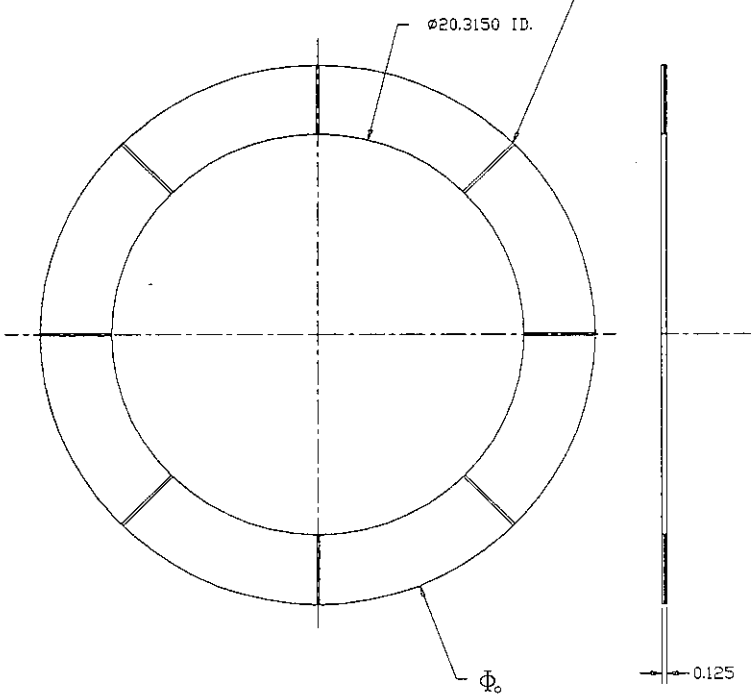

TABLE

COIL	Φ_o	QTY.
M1	24.335	2
M2	23.161	2
E1	25.508	2
C	22.492	2
E2	26.012	2

NOTES:
1) DIMENSIONS ARE IN INCHES
2) MATERIAL IS 1/8" THK. G-10

UNLESS OTHERWISE SPECIFIED TOLERANCES:
.XXX ± .005
.XX ± .02

TREATMENT
FINISH
ACT. WT. CALC. WT.

CONTRACT NO.
DRAWN DATE
CHECK
DESIGN
DESIGN ACTIVITY
CUSTOMER

WANG NMR, INC.
550 North canyons Parkway, Livermore, CA 94550

TITLE: MICE COIL SIDE INSULATION

SIZE: C
DWG NO. MICE-C002
SCALE: DO NOT SCALE
RELEASE DATE
SHEET

Figure II-9-1
Winding Instruction Summary
Spool Assignment for TRACKER SOLENOID

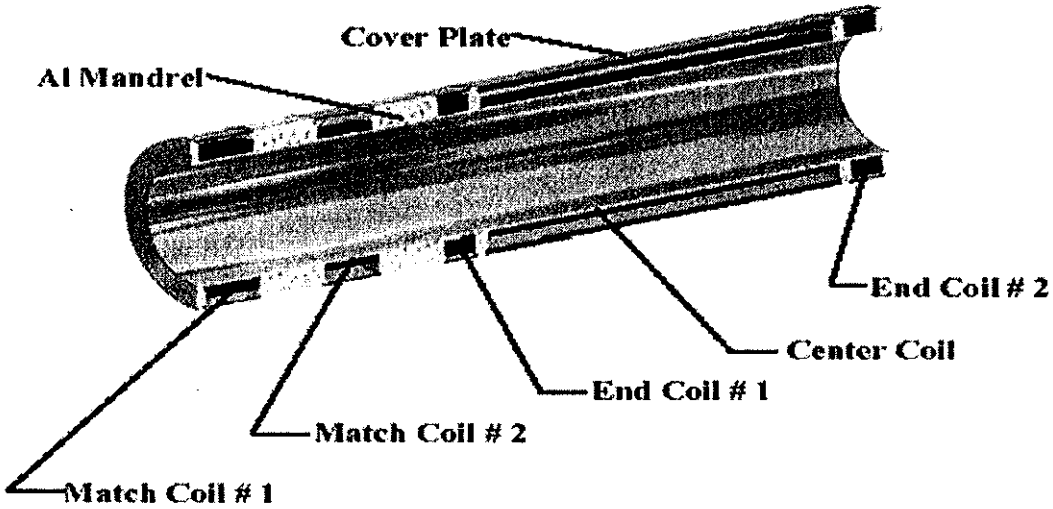

Tracker solenoid showing the positions of the five coils

UNIT # 1		Winding Requirement		UNIT # 2	
COIL #	CONDUCTOR SPOOL #	# of Layers	# of Turns per Layer	COIL #	CONDUCTOR SPOOL #
MATCH COIL #1	36680	42	120	MATCH COIL #1	36680
MATCH COIL #2	36679	28	119	MATCH COIL #2	367601-2
END COIL #1	36680	56	66	END COIL #1	36760-1-1
CENTER COIL	36679	20	784	CENTER COIL	36761-1
END COIL #2	36680	62	66	END COIL #2	36760-1-1

Proprietary

II-11. Coil Former Reinforcement Design

Because of significant axial magnetic forces, the coil pack will be exerted with a shear stress. To minimize shear stress and minimize the conductor motion, we shall add ¼" thick reinforce aluminum cylindrical to all coils. These reinforcement cylinders will be welded to connect to its flanges, as shown in Drwg C003.

Since the strength of aluminum weldment is only 10 ksi and ¼" x ¼" weld will support 75 ton.

II-12. Design of Conductor Joints and Voltage Tap

In order to keep I^2R loss for each joint in the order of 4 mW, each conductor joint must have a resistance lower than 10^{-7} Ω. Each unit of tracker magnet shall have about 10 joints. Thus, total I^2R loss will be kept at about 40 mW.

The design of the conductor joint will be lapping joint over at least 24" long. A small R&D program to establish the joint technique and the measuring method for quality control is necessary because it is tricky to measure very low values of resistance.

Voltage tap will be made at each joints. All joints will be carefully insulated, mechanically supported, and epoxy potted in a G-10 supporting groove.

II-13. Design of Superconducting Feedthrough

UHV feedthrough made of hollow copper conductor is custom-made by ISI, as shown in Photo II-13-1. Each feedthrough has 4 hollow copper conductors with an ID of 0.060", OD of 0.125", and a length of 3.5". A 0.051"diameter-24" long superconducting strand rated at 500A are pretinned with soft solder and then, it is soft-soldered to the hollow conductor feedthrough. In order to minimize the I^2R loss, superconducting strands will be lapped joint over 24" to coil terminals.

The superconducting feedthrough must be leak-checked at room temperature as well at liquid helium temperature. It must be thermal cycled several times between 4.2K and 300K to make sure it is vacuum tight to 1×10^{-10} torr liter/ sec.

The superconducting feedthru strand at both helium and vacuum side will be soldered with three times more superconductor/ copper composite to avoid burn out and enhance thermal conductivity and stability.

Proprietary

Proprietary

REVISIONS				
ZONE	REV	DESCRIPTION	DATE	APPROVED

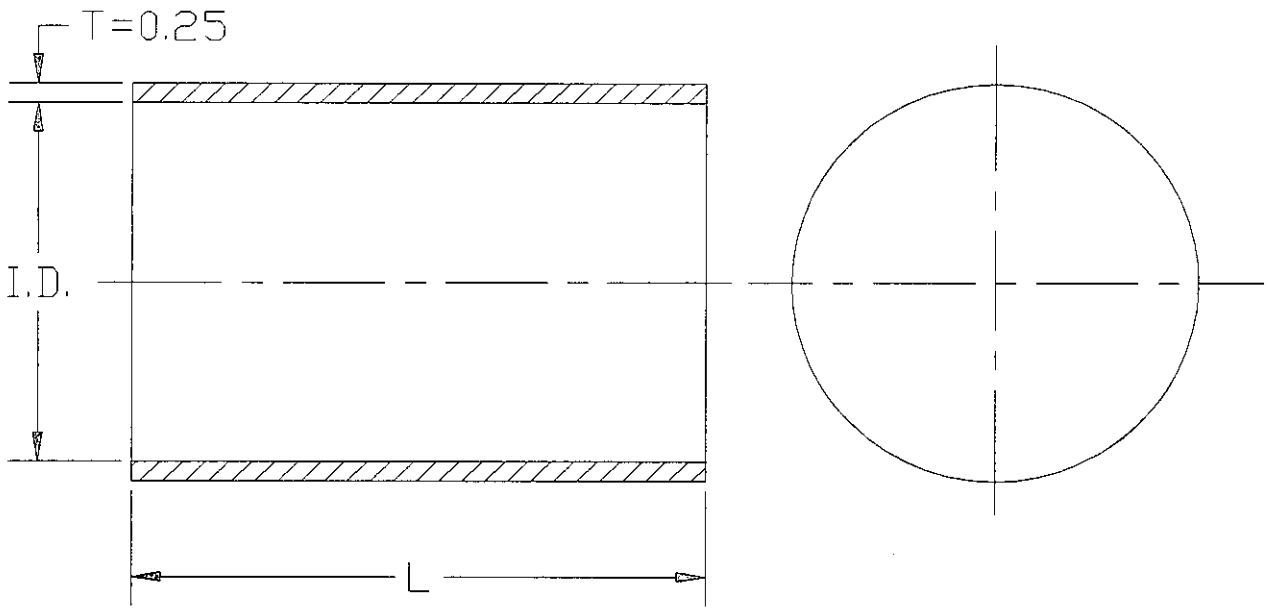

NOTES:

1) DIMENSIONS ARE IN INCHES
2) MATERIAL IS 0.25 THK. 6061T6 AL.
3) WORK: CUTTING & ROLLING

COIL	I.D.	L	QTY.
M1	24.335	8.169	1
M2	23.161	8.102	1
E1	25.508	4.606	1
C	24.492	51.996	1
E2	26.010	4.606	1

UNLESS OTHERWISE SPECIFIED TOLERANCES:
.XXX ± .005
.XX ± .02

TREATMENT
FINISH
ACT. WT. CALC. WT.

CONTRACT NO.
DRAWN DATE
CHECK
DESIGN
DESIGN ACTIVITY
CUSTOMER

WANG NMR, INC.
550 North canyons Parkway, Livermore, CA 94550

TITLE
MICE TRACKER COIL REINFORCEMENT

SIZE C
DWG NO. MICE-C003
SCALE DO NOT SCALE
RELEASE DATE
SHEET

Photo II-13-1

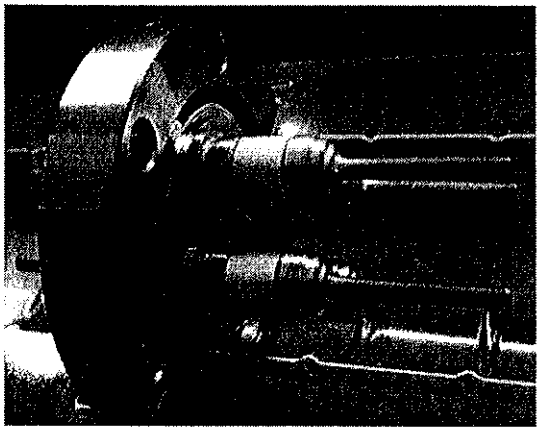

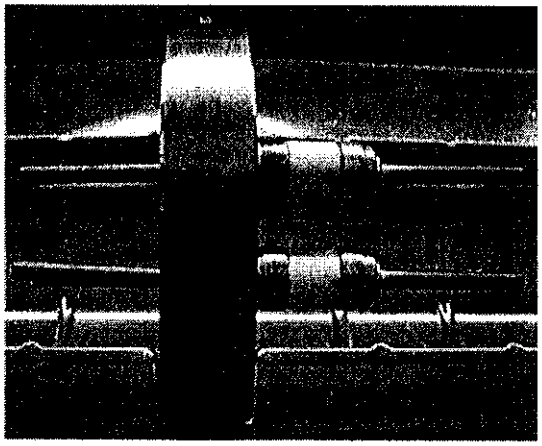

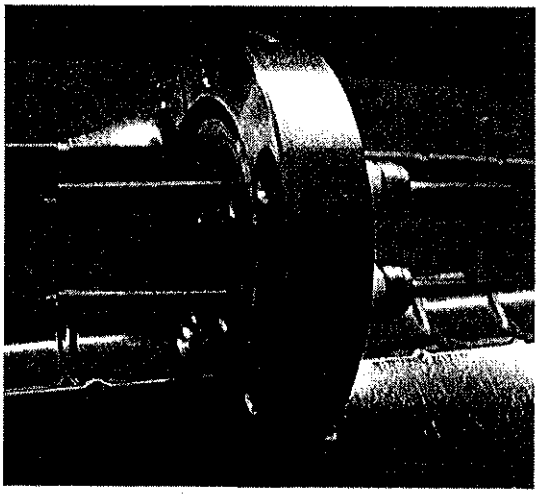

Proprietary

II-14. Passive Magnet Protection System

INDUCTANCE AND STORED ENERGY

Table II-14-1 lists the computed self and mutual inductance as well as stored energy of each coil

MAGNET QUENCH PROTECTION SYSTEM

A system of diodes and resistors are used to protect the magnet from damage in the event that one or more coils quench. A schematic of the protection system is illustrated in Figure II-14-1. Quench protection is provided by a low value resistor and a pair of back-to-back diodes connected across each magnet coil. The voltage across each individual magnet is low during the normal charging and discharging of the magnet. At the operating temperature of 4K, the diodes have a threshold voltage on the order of 3 to 5 volts. Therefore, the diodes will not conduct and the resistor is effectively disconnected. If a quench should occur in a particular coil, the coil looses its superconductivity and the voltage across the coil will begin to rise. As the voltage increases, a diode will begin to conduct which will limit the voltage across the coil to a safe value. The diode(s) and resistor provide a current path across the quenching coil to allow the current in the coil to decay. The change of current in the quenching coil will induce voltages in the other coils of the magnet due to their mutual inductance. The circuits across the other coils will protect these coils from excessive voltages. The resistors in series with the diodes are required to limit the current buildup in the coils due to these quench induced voltages.

The diodes are an industry type R620 "hockey puck" high current rectifier. This diode has been tested thoroughly at liquid helium temperatures and has been used successfully in many similar protection systems at currents up to 400 amperes. The diodes are mounted in a specially designed assembly which is shown in Figure II-14-2. The diode clamping system utilizes a stack of Bellville washers to maintain the clamping force within specified limits over the full temperature range including the effect of temperature shocks that may be encountered during the magnet cooldown and a magnet quench. The clamp bar and its base plate are shown in Fig PRT4622-A and PRT4621-B.

The resistors R1 to R9 have a value in the range of 0.003 to 0.010 ohms. The actual value will depend upon the coil and mutual inductances. The resistors are fabricated from stainless steel ribbon and are designed with sufficient heat capacity to handle the worst case quench currents safely.

Proprietary

TABLE II-14-1
INDUCTANCE FOR MICE SPECTROMETER MAGNET

DATE : JULY 7, 2006

MICE SPECCTROMETER MAGNET						
COIL #	MATCH1	MATCH2	END1	CENTER	END2	TOTAL
SELF INDUCTANCE	15.7160	6.8514	10.5220	43.4850	12.8850	89.4594
MUTUAL INDUCTANCE :						
M1		1.1377	0.3097	0.2823	0.0204	1.7502
M2	1.1377		1.0065	0.5706	0.0235	2.7383
E1	0.3097	1.0065		3.4971	0.0564	4.8697
C	0.2823	0.5706	3.4971		3.8832	8.2333
E2	0.0204	0.0235	0.0564	3.8832		3.9835
TOTAL	17.47	9.59	15.39	51.72	16.87	111.03
OPERATED AMPERE :	214.20	251.80	249.50	265.90	265.20	
STORED ENERGY	0.40	0.30	0.48	1.83	0.59	3.61

TOTAL INDUCTANCE : 111.03 HERNY

TOTAL ENERGY : 3.61 MJ

TABLE BD
9/5/2006

Proprietary

Proprietary

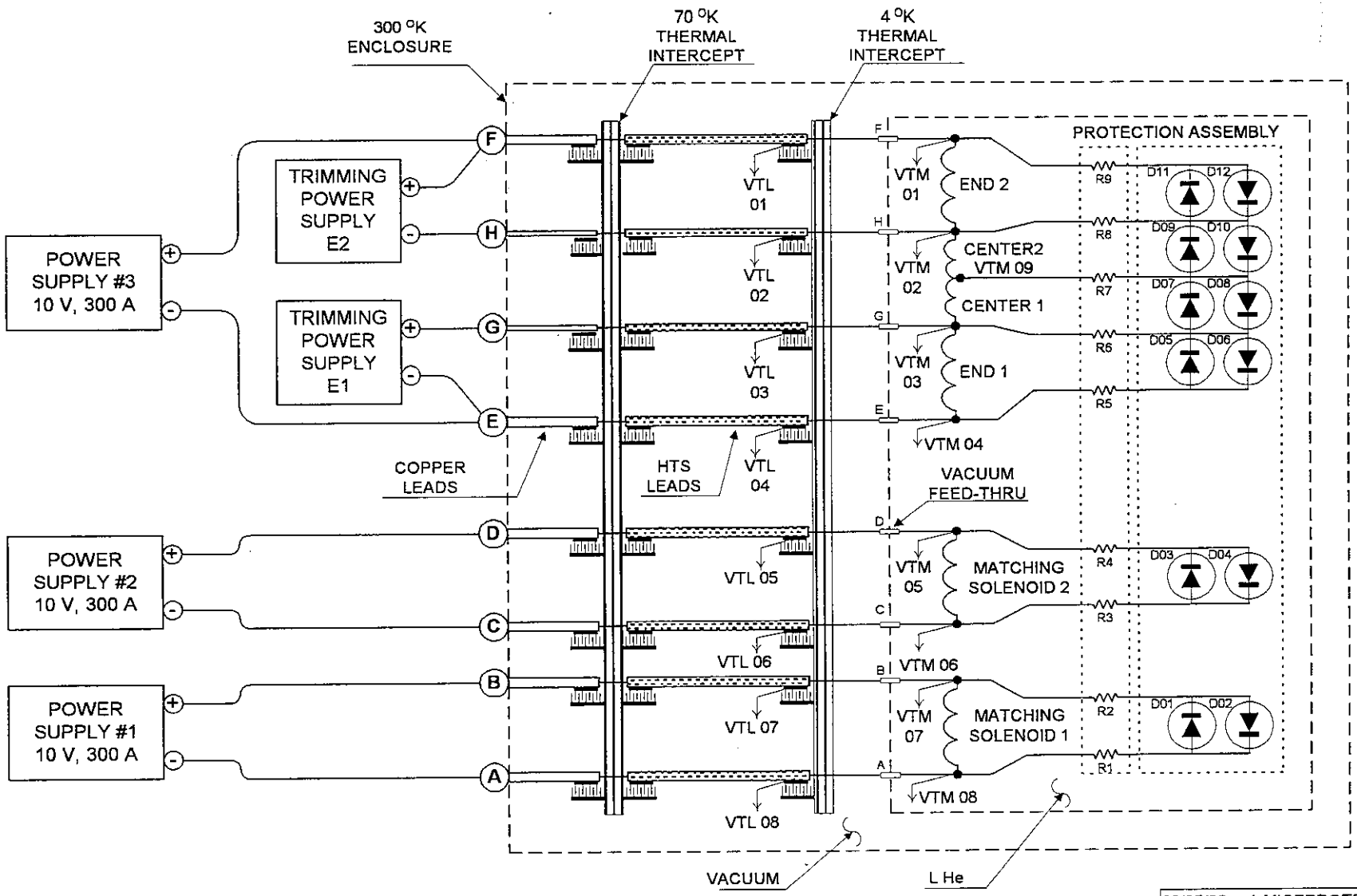

09/05/06 / MICEPROTECTB.VSD

MAGNET PROTECTION
MICE SPECTROMETER
Wang NMR Inc.

FIGURE II-14-1

PROPRIETARY INFORMATION of Wang N M R INC

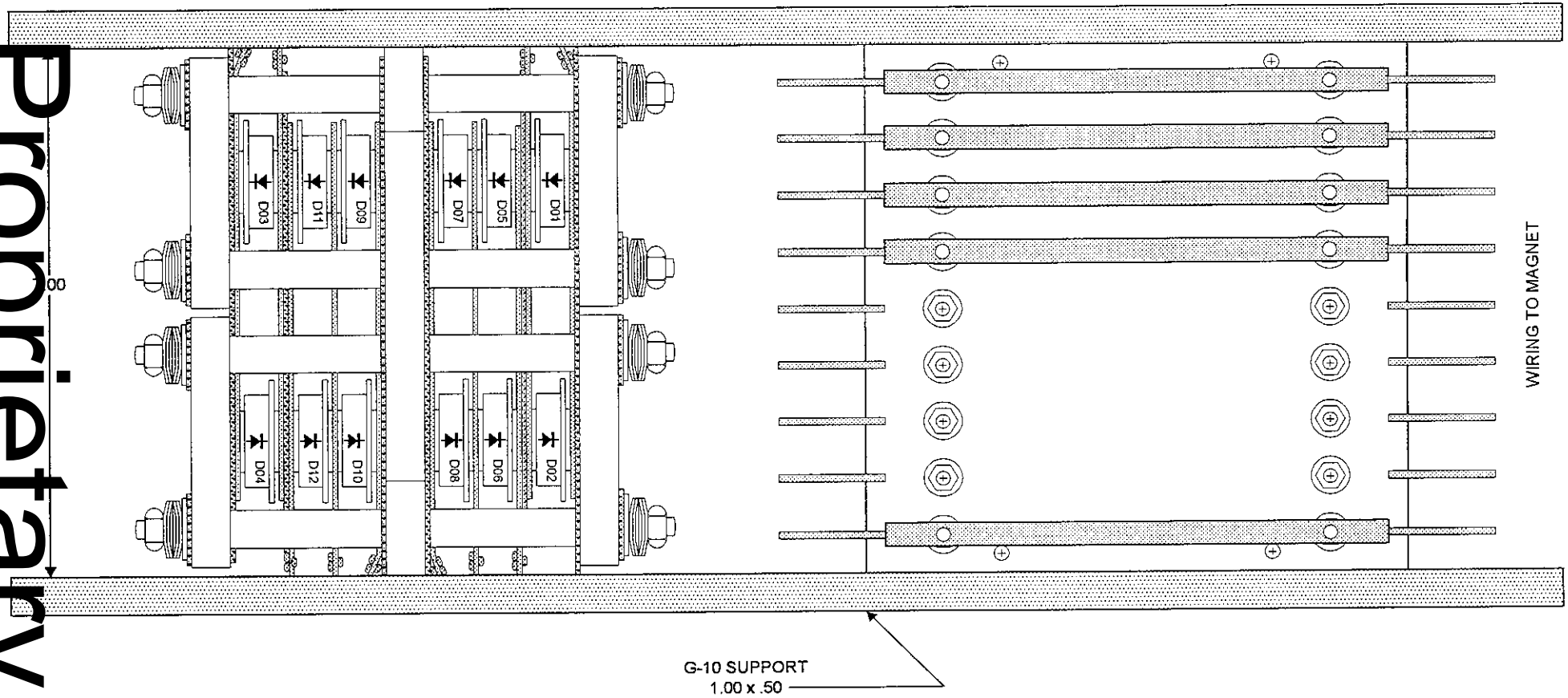

NOTES:

1.

2.

3.

4.

17:16 | 07/26/06 | PROTECT_LAYOUTC.VSD

LAYOUT, PROTECTION ASSEMBLY
MICE MAGNET
Wang NMR Inc.

FIGURE II-14-2

PROPRIETARY INFORMATION of Wang N M R INC

Proprietary

Proprietary

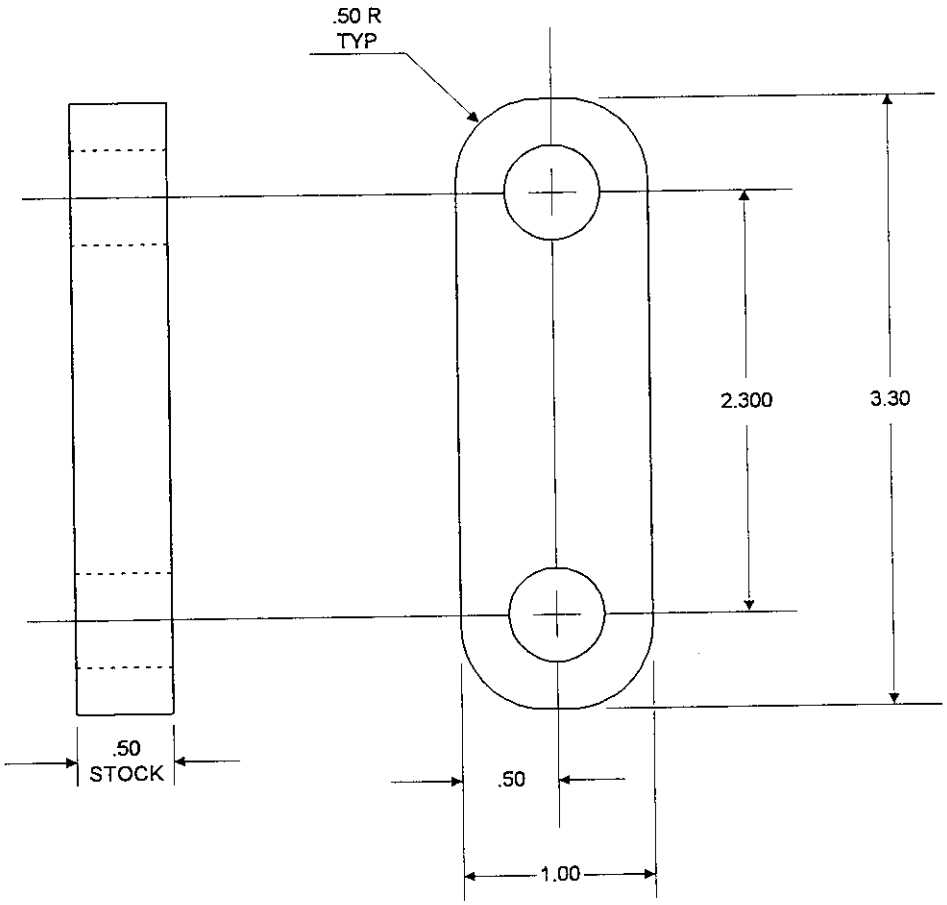

NOTES:

1. MATERIAL: ALUMINUM, 1/2 INCH PLATE
2. HOLES: 0.515 (33/64) THROUGH , 2 PLACES
3. QTY REQ = 4

PROPRIETARY INFORMATION
of Wang N M R INC

05/02/05 PRT4622A.VSD

PROTECTION DIODE MOUNTING
CLAMP BAR
Wang NMR Inc

PRT 4622 - A

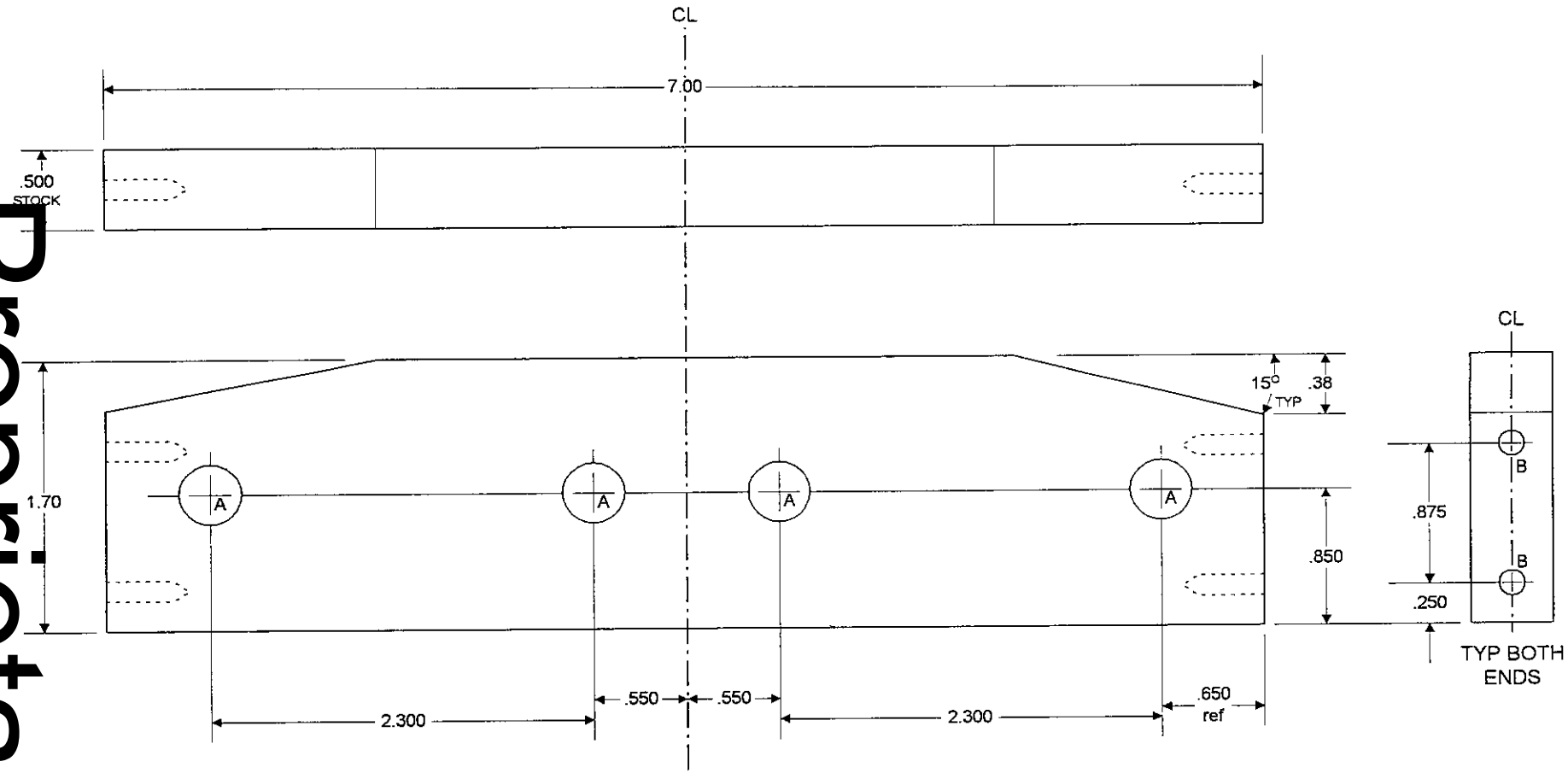

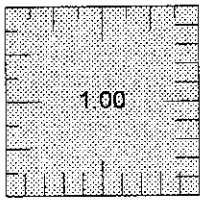

NOTES:

1. MATERIAL: ALUMINUM, 1/2 INCH PLATE

2. HOLES:
   A. .500 THROUGH 4 PLACES
   B. TAP 1/4-20 .40 DEEP 4 PLACES

3. QTY REQ = 1

PROPRIETARY INFORMATION
of Wang N M R INC

07/10/06 PROTECTBASE.VSD

PROTECTION DIODE
MOUNTING BASE PLATE
Wang NMR Inc

PRT 4621 -B

Proprietary

II-15. 3-D Magnet Quench Analyses for MICE Tracker Magnet

We perform quench analyses based on assumption that aluminum bore tube does not exist. Employing each coil self-inductance, dividing the center coil into two coils, and assuming the initial protection resistor in series with each protection diode is 0.01 Ω, then the 3D XYZ coil volume, is measured as follows:

X = coil thickness
Y = coil circumference
Z = coil axial length

Assume the turn-to-turn initial velocity of propagation is 2×10^{-3} Vo, and layer-to-layer initial velocity of propagation is 2×10^{-3} Vo, where Vo is the initial velocity of propagation and is computed to be about 24 m/ sec. Then, 3D quench analyses is shown in Appendix II-15-1.

Table II-15-1 summarizes results of quench computation for the maximum coil temperature, the maximum internal voltage, the maximum coil resistance R and the quench time.

All coils, when quenches, will have induced unbalanced voltage of order of 1000V. It is clear that why coil must be meggered to 5 kV (in air) in order to sustain the maximum unbalanced voltage (in helium gas) for each of the tracker coils. The detail 3D quench analyses of each coil is shown in Appendix II-15-1 to II-15-5.

In reality, aluminum cold bore tube is a very low resistance short turn. This will slow down the di/ dt and help dissipate the energy. Therefore, actual interval voltage and unbalance voltage will be significantly small.

TABLE II-15-1 3D Quench Analyses

Coil	M1	M2	E1	C (half)	E2
Quench time	2.4 sec	3.6 sec	4.4 sec	3 sec	4.2 sec
Maximum R	9.6 Ω	6.0 Ω	7.1 Ω	12.0 Ω	8.9 Ω
Maximum internal V	1143 V	454 V	857 V	1637 V	1094 V
Maximum temperature	135K	83K	131K	86K	155K

Proprietary

II-16. Fringing Field Calculation and Evaluation of Effect on HiTc Lead

Effect of magnetic field and temperature on HiTc lead is shown in Fig II-16-1. Therefore, HiTc lead service tower is designed so that hot end of these leads are position at R≧ 70 cm and Z≧ 180 cm where Z= 0 is defined at the further end flange of M1 coil. Fringing field calculation is tabulated in TableII-16-1. As shown in TableII-16-1, the maximum Bz ≒ 650 to 700 Gauss and the maximum B_R= 120 to 240 gauss. When we orient the HiTc lead so that HiTc conductor broad face is parallel to B_R and Bz then B_{11}≦ 700 gauss and thus at a hot end of 64K temperature, high Tc lead, reduction of current scaling factor is about 5 to 10 %. Therefore 500A lead become 450A and 100A lead become 90A.

Table II-16-1

LBL MICE SOLENOID TRACKER SUPERCONDUCTING SYSTEM
FRINGE FIELD COMPOMENT ON HI-TC LEAD AREA

UNIT: G

Z POSITION (cm)	180	190	200
R= 45 CM (HZ)	-651	-708	-801
R= 45 CM (HR)	55	42	11
R= 45 CM (HT)	654	710	802
R= 55 CM(HZ)	-647	-708	-809
R= 55 CM (HR)	88	105	126
R= 55 CM (HT)	654	717	819
R= 60 CM(HZ)	-637	-695	-789
R= 60 CM (HR)	102	132	175
R= 60 CM (HT)	646	708	808
R= 70 CM(HZ)	-602	-648	-717
R= 70 CM (HR)	125	174	242
R= 70 CM (HT)	615	671	757

Fig II-16-1 CURRENT SCALING FACTORS FOR MAGNETIC FIELD AND TEMPERATURE

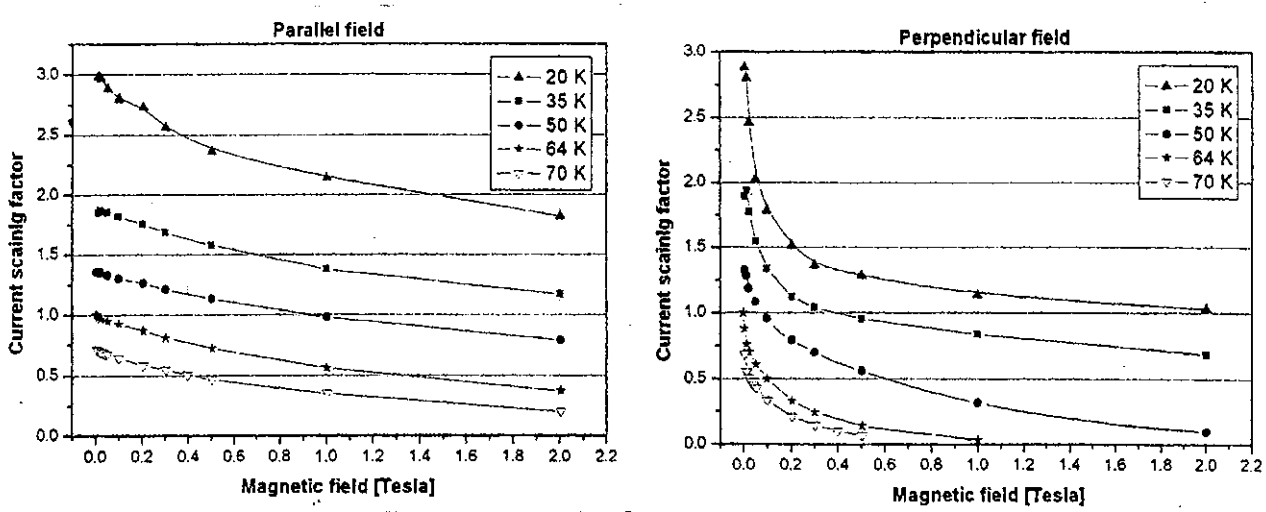

Proprietary

II-17. Fringing Field Calculation and Effect on Cryocooler Cold Head

Our three pulse tube cryocoolers cold head are positioned as shown in Table II-17-1. It is clear that fringing field at each 300K, 60K and 4.2K stage is less than 1600 gausses. If there is any problem, the valve portion of 300K cold head could be operated at a position at a lower field region

Table II-17-1

FRINGE FIELD CALCULATION

LBL MICE TRACKER SOLENOID SUPERCONDUCTING SYSTEM (FRINGE FIELD COMPOMENT IN COLDHEAD)

HZ : AXIAL COMPONENT OF MAGNETIC INDUCTION

HR: RADIAL COMPONENT OF MAGNETIC INDUCTION;

HT: TOTAL MAGNETIC INDUCTION

CRYCOOLER REGION

UNIT: G

	Z POSITION (cm)	80	90	100	110	120	130	140	150	160	170
4.2 K	R= 45 CM (HZ)	689	-1559	-2837	-1647	-924	-694	-617	-594	-596	-616
	R= 45 CM (HR)	-2699	-3428	-1014	384	348	206	125	86	68	61
	R= 45 CM (HT)	2786	3769	3014	1691	987	724	630	600	600	619
	R= 55 CM(HZ)	-257	-922	-1356	-1203	-914	-732	-643	-605	-597	-612
	R= 55 CM (HR)	-1500	-1536	-889	-259	-11	45	53	56	63	74
	R= 55 CM (HT)	1522	1792	1621	1231	915	734	645	608	601	617
	R= 60 CM(HZ)	-379	-776	-1051	-1013	-848	-713	-636	-600	-591	-603
	R= 60 CM (HR)	-1185	-1154	-764	-339	-106	-14	22	42	59	79
64 K	R= 60 CM (HT)	1244	1390	1299	1068	854	713	636	601	594	609
	R= 70 CM (HZ)	-433	-602	-729	-753	-706	-643	-597	-572	-565	-575
	R= 70 CM (HR)	-810	-748	-567	-353	-188	-85	-24	18	53	87
	R= 70 CM (HT)	919	960	924	832	730	650	598	572	567	582
	R= 80 CM (HZ)	-412	-498	-568	-596	-589	-566	-544	-529	-526	-535
	R= 80 CM (HR)	-603	-544	-438	-313	-199	-111	-46	5	48	91
300K	R= 80 CM (HT)	730	738	717	673	622	577	546	530	529	542
	R= 90 CM (HZ)	-373	-426	-469	-494	-500	-495	-487	-482	-481	-488
	R= 90 CM (HR)	-474	-423	-350	-266	-184	-123	-53	-1	46	92
	R= 90 CM (HT)	603	600	585	561	533	508	490	482	484	497
	R= 100 CM (HZ)	-335	-370	-401	-421	-432	-435	-434	-434	-435	-440
	R= 100 CM (HR)	-385	-342	-287	-225	-163	-104	-51	-2	44	91
	R= 100 CM (HT)	511	504	493	478	461	447	437	434	437	449

Cold head First Second Third

Proprietary

Appendix II-1-1

Engineering Design Drawing For Coil Structure

Wang NMR Inc.

• 550 North Canyons Parkway • Livermore, CA 94551

Proprietary

Proprietary

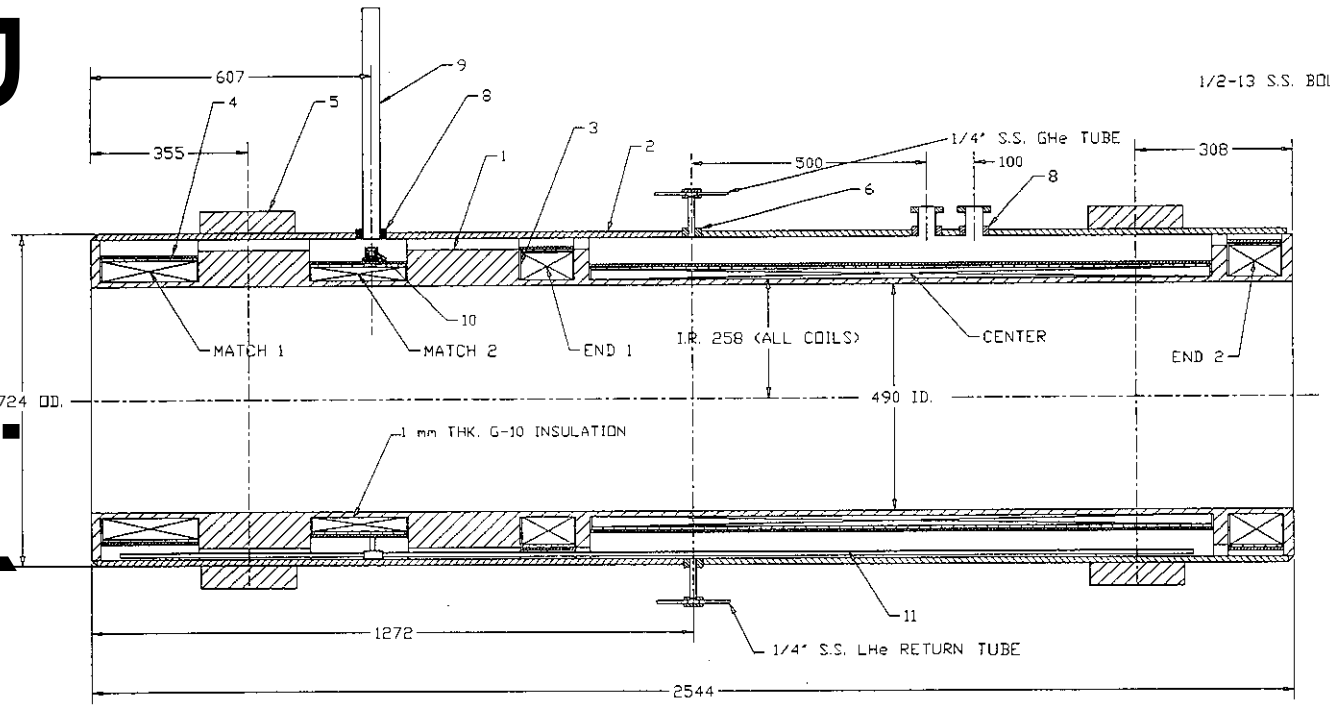

QTY.	ITEM	DWG. No.	DESCRIPTION	NOTE
32	12	MICE-C012	WASHER	304 S.S.
1	11	MICE-C011	PRECOOL LINE	304 S.S.
1	10	MICE-C010	PRECOOL NUZZLE	304 S.S.
1	9	MICE-C009	NECK TUBE	304 S.S.
2	8	MICE-C008	BI-METAL COUPLING	AL- S.S.
8	7	MICE-C007	COLD MASS SUPPORT BLACKET	316 S.S.
2	6	MICE-C006	BI-METAL COUPLING	AL- S.S.
2	5	MICE-C005	SUSPESION RING	6061T6
5	4	MICE-C004	REINFORCEMENT	6061T6
10	3	MICE-C003	SIDE INSULATION	G-10
2	2	MICE-C002	LHe VESSEL	6061T6
1	1	MICE-C001	COIL FORM	6061T6

NOTES:
1) DIMENSIONS ARE IN mm
2) REQD. VACUUM TIGHT (LEAK CHECK)

UNLESS OTHERWISE SPECIFIED TOLERANCES: XXX ± .005 XX ± .02

WANG NMR, INC.
550 North canyons Parkway, Livermore, CA 94550

MICE TRACKER MOUDLE
COIL STRUCTURE

D MICE-C0000

DO NOT SCALE

Proprietary

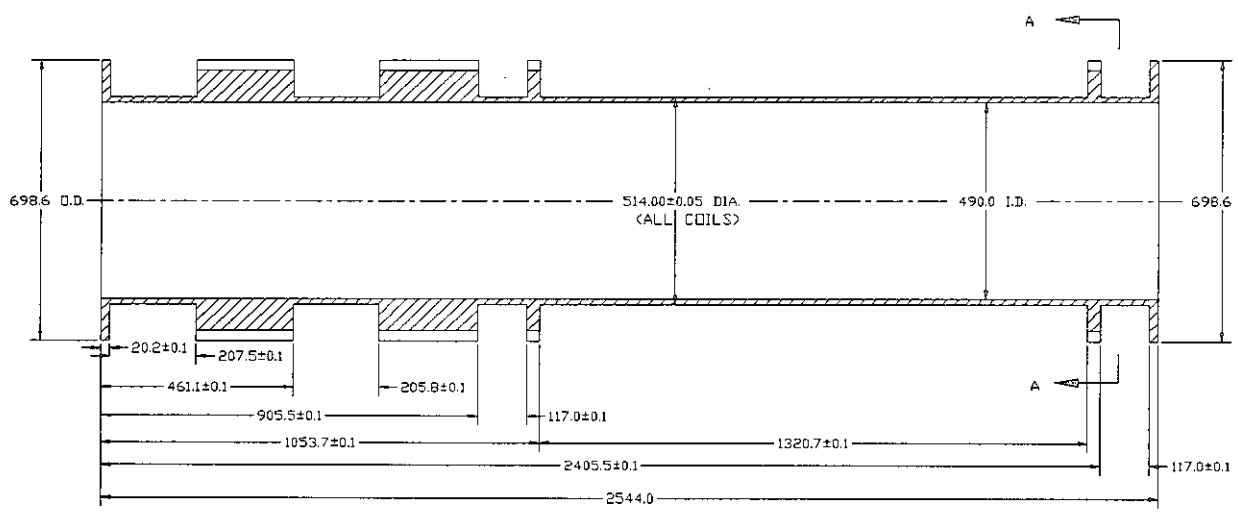

B-B SECTION

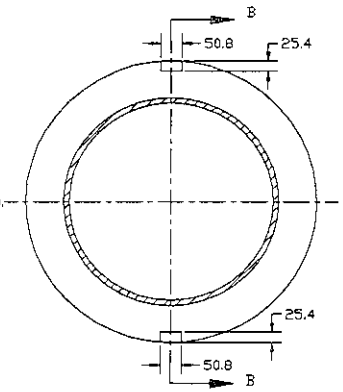

A-A VIEW

NOTES:
1) DIMENSIONS ARE IN mm
2) MATERIAL IS FORGING 6061T6 ALUMINUM
3) QTY. 2

UNLESS OTHERWISE SPECIFIED TOLERANCES:
.XXX ± .005
.XX ± .02

WANG NMR, INC.
330 North Canyons Parkway, Livermore, CA 94550

MICE TRACK MODULE COIL FORM

D | MICE-C001

DO NOT SCALE

Proprietary

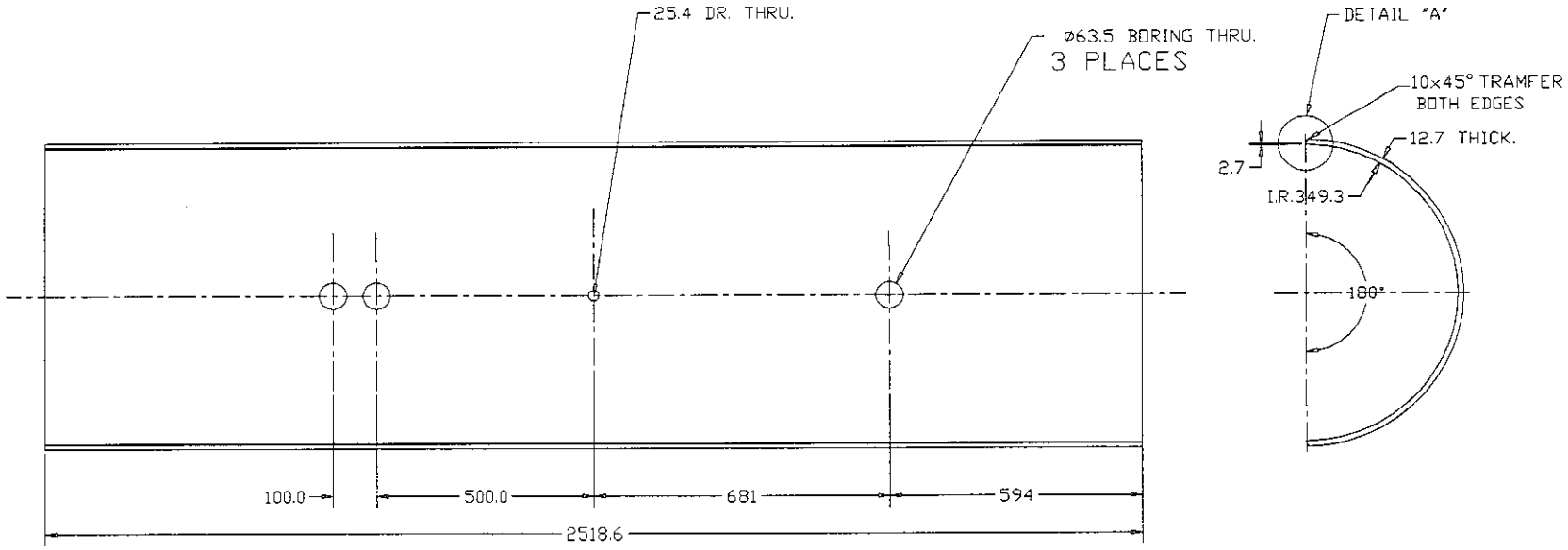

NOTES:
1) DIMENSIONS ARE IN mm
2) MATERIAL IS 1/2" THICK 6061T6 ALUMINUM PLATE
3) WORK: CUTTING MATERIAL, ROLLING & TRAMFER EDGES
4) QTY. 1

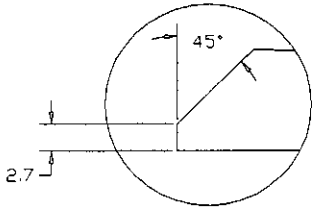

DETAIL "A"

UNLESS OTHERWISE SPECIFIED TOLERANCES:
.XXX ± .005
.XX ± .02

WANG NMR, INC.
330 North Canyons Parkway, Livermore, CA 94550

COIL FORM
COVER

D | MICE-C002

DO NOT SCALE

Proprietary

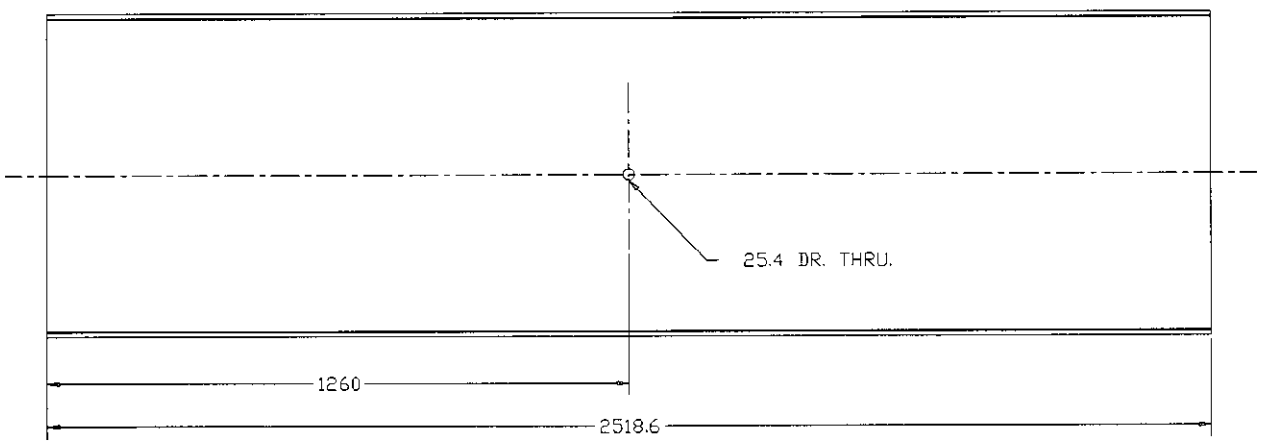

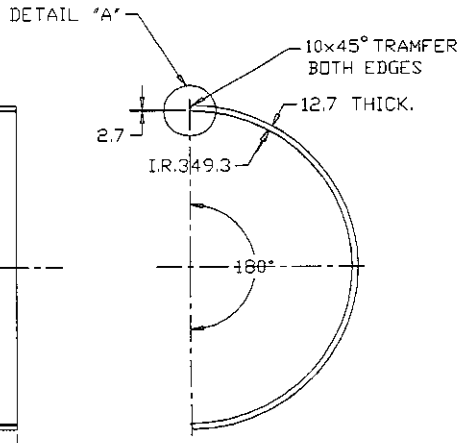

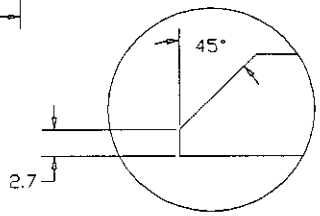

DETAIL "A"

NOTES:
1) DIMENSIONS ARE IN mm
2) MATERIAL IS 1/2" THICK 6061T6 ALUMINUM PLATE
3) WORK: CUTTING MATERIAL, ROLLING & TRAMFER EDGES
4) QATY. 1

UNLESS OTHERWISE SPECIFIED TOLERANCES:
.XXX ± .005
.XX ± .02

TREATMENT
FINISH
NET WT.
GALV. WT.

WANG NMR, INC.
550 North canyons Parkway, Livermore, CA 94550

COIL FORM
COVER

SIZE D
MICE-C002A

SCALE DO NOT SCALE

Proprietary

REVISIONS				
ZONE	REV.	DESCRIPTION	DATE	APPROVED

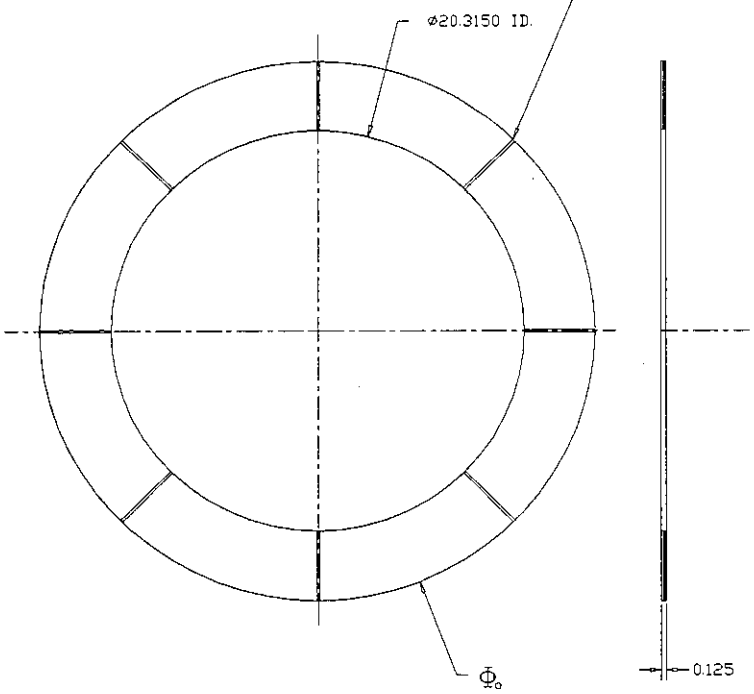

TABLE

COIL	Φo	QTY.
M1	24.335	2
M2	23.161	2
E1	25.508	2
C	22.492	2
E2	26.012	2

NOTES:
1) DIMENSIONS ARE IN INCHES
2) MATERIAL IS 1/8" THK. G-10

UNLESS OTHERWISE SPECIFIED TOLERANCES:
.XXX ± .005
.XX ± .02

TREATMENT
FINISH
ACT. WT. CALC. WT.

CONTRACT NO.
DRAWN DATE
CHECK
DESIGN
DESIGN ACTIVITY
CUSTOMER

WANG NMR, INC.
550 North canyons Parkway, Livermore, CA 94550

TITLE
MICE COIL SIDE INSULATION

SIZE C
DWG NO. MICE-C003
SCALE DO NOT SCALE
RELEASE DATE
SHEET

Proprietary

REVISIONS				
ZONE	REV	DESCRIPTION	DATE	APPROVED

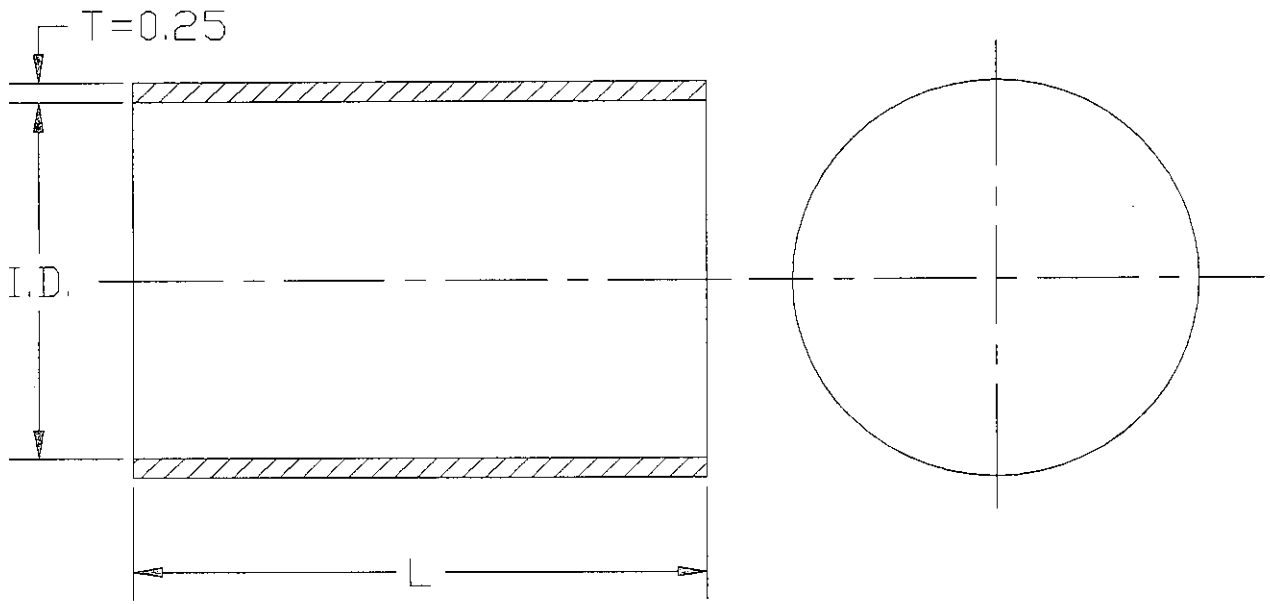

NOTES:

1) DIMENSIONS ARE IN INCHES
2) MATERIAL IS 0.25 THK. 6061T6 AL.
3) WORK: CUTTING & ROLLING

COIL	I.D.	L	QTY.
M1	24.335	8.169	1
M2	23.161	8.102	1
E1	25.508	4.606	1
C	22.492	51.996	1
E2	26.010	4.606	1

UNLESS OTHERWISE SPECIFIED TOLERANCES:
.XXX ± .005
.XX ± .02

CONTRACT NO.
DRAWN
DATE
CHECK
TREATMENT
DESIGN
FINISH
DESIGN ACTIVITY
ACT. WT.
CALC. WT.
CUSTOMER

WANG NMR, INC.
550 North canyons Parkway, Livermore, CA 94550

TITLE
MICE TRACKER COIL REINFORCEMENT

SIZE C
DWG NO. MICE-C004
SCALE DO NOT SCALE
RELEASE DATE
SHEET

Proprietary

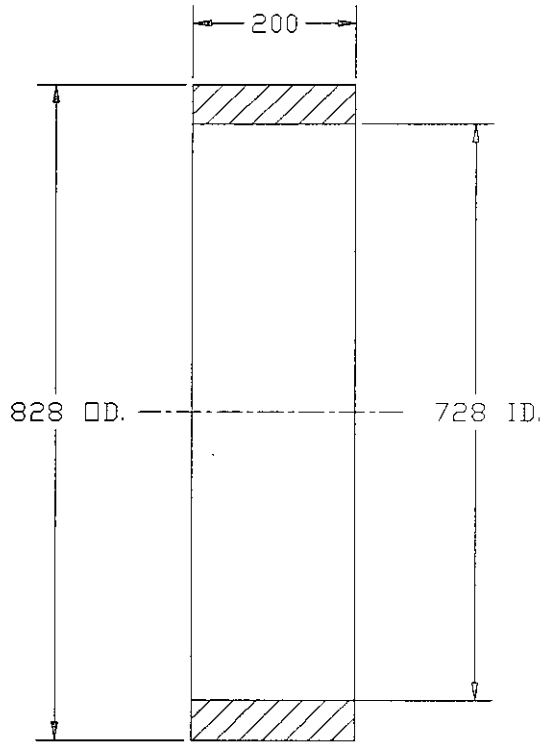

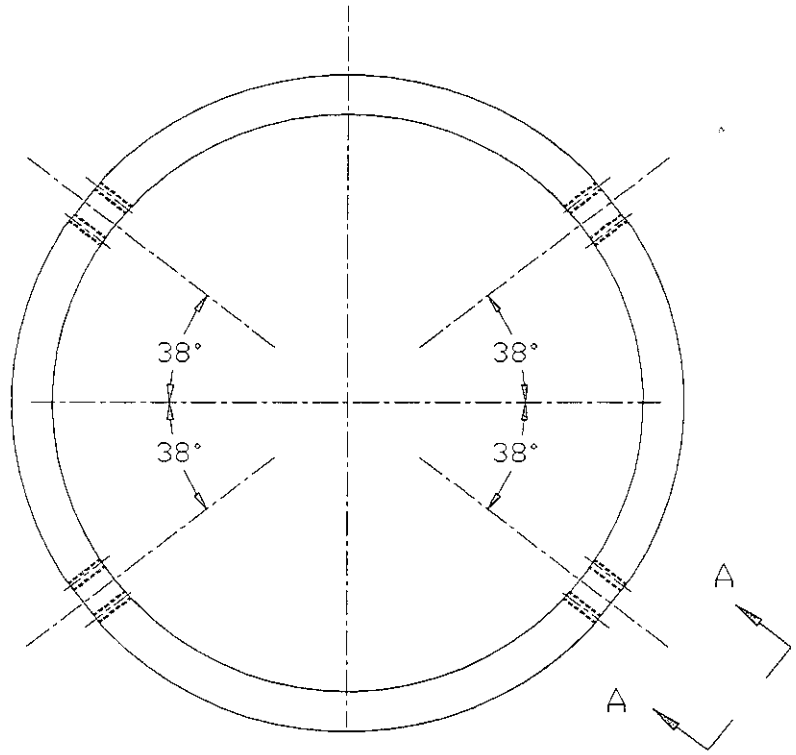

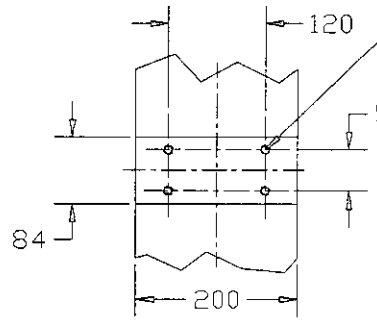

1/2-13 TAP THRU.
4 PLACES EACH FACE
TOTAL 16 PLACES

NOTES:
1) DIMENSIONS ARE IN mm
2) MATERIAL IS 6061T6
3) QTY. 2

REVISIONS				
ZONE	REV	DESCRIPTION	DATE	APPROVED

UNLESS OTHERWISE SPECIFIED TOLERANCES:
.XXX ± .005
.XX ± .02

TREATMENT
FINISH
ACT. WT. CALC. WT.

WANG NMR, INC.
550 North canyons Parkway, Livermore, CA 94550

TITLE: SUSPENSION RING

SIZE: C
DWG NO: MICE-C005
SCALE: DO NOT SCALE
SHEET

Proprietary

REVISIONS				
ZONE	REV	DESCRIPTION	DATE	APPROVED

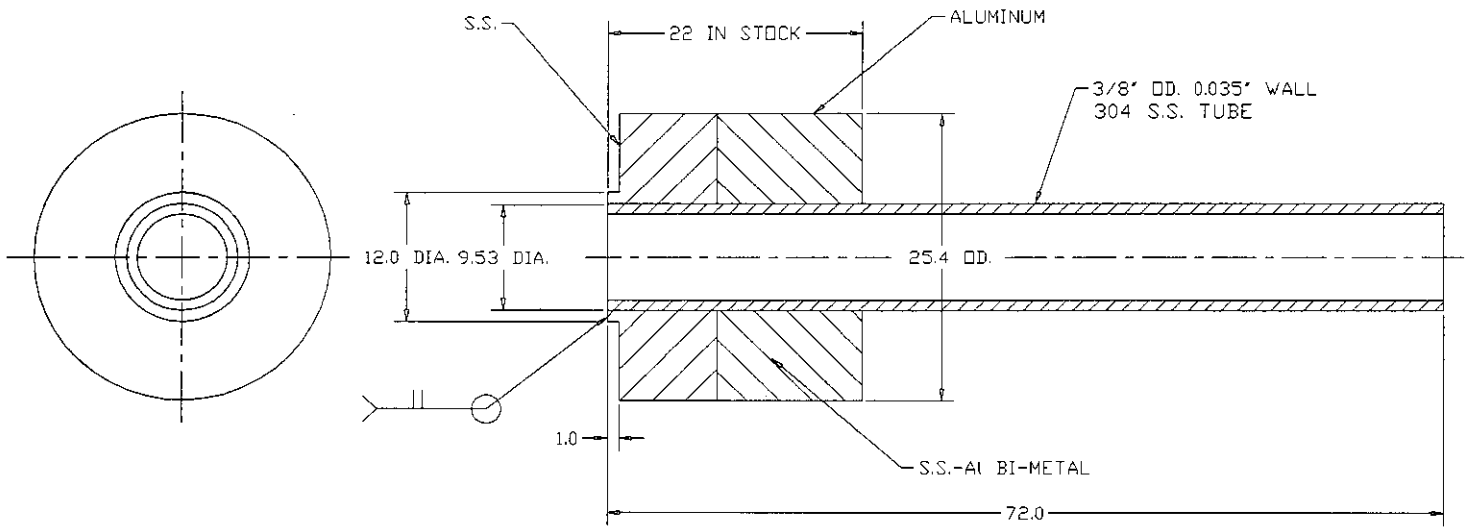

NOTES:
1) DIMENSIONS ARE IN mm
2) MATERIAL IS S.S.-AL BI-METAL & 3/8" OD. 0.035" WALL 304 S.S. TUBE
3) QTY. 2

UNLESS OTHERWISE SPECIFIED TOLERANCES: .XXX ± .005 .XX ± .02	CONTRACT NO.	WANG NMR, INC. 550 North canyons Parkway, Livermore, CA 94550
	DRAWN / DATE	TITLE: BI-METAL COUPLING
	CHECK	
TREATMENT	DESIGN	
FINISH	DESIGN ACTIVITY	SIZE: C / DWG NO.: MICE-C006
ACT WT. / CALC. WT.	CUSTOMER	SCALE: DO NOT SCALE / RELEASE DATE / SHEET

Proprietary

REVISIONS				
ZONE	REV	DESCRIPTION	DATE	APPROVED

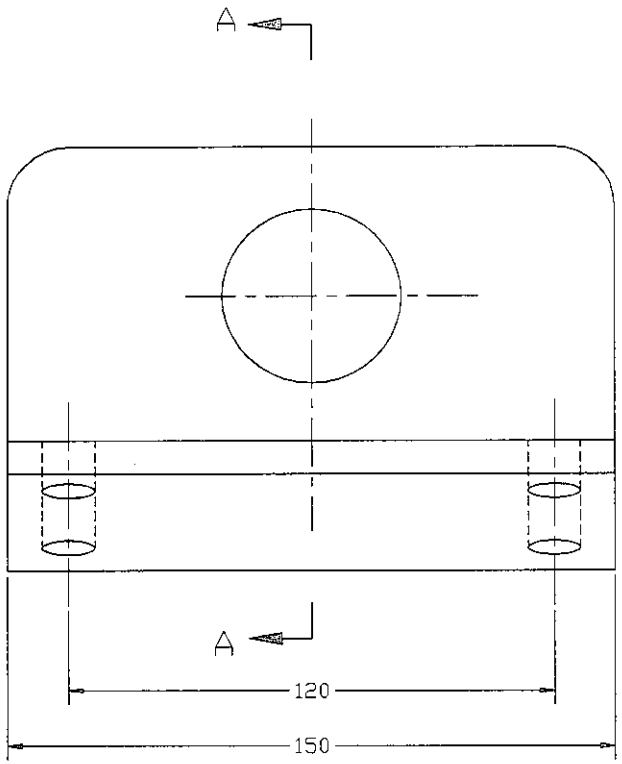

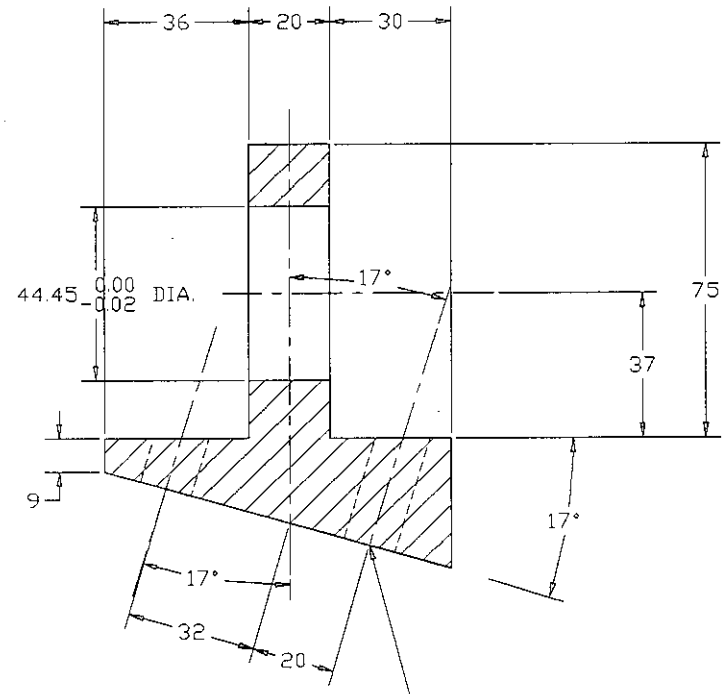

A-A SECTION

13.0 DR. THRU.
4 PLACES AS SHOWN AS DWG.

NOTES:
1) DIMENSIONS ARE IN mm
2) MATERIAL IS 316 S.S.
3) QTY. 8

UNLESS OTHERWISE SPECIFIED TOLERANCES: .XXX ± .005 .XX ± .02	CONTRACT NO.		
	DRAWN	DATE	
	CHECK		
TREATMENT	DESIGN		
FINISH	DESIGN ACTIVITY		
ACT. WT. / CALC. WT.	CUSTOMER		

WANG NMR, INC.
550 North canyons Parkway, Livermore, CA 94550

TITLE: COLD MASS SUPPORT BRACKET

SIZE: C | DWG NO.: MICE-C007

SCALE: DO NOT SCALE | RELEASE DATE | SHEET

Proprietary

REVISIONS				
ZONE	REV	DESCRIPTION	DATE	APPROVED

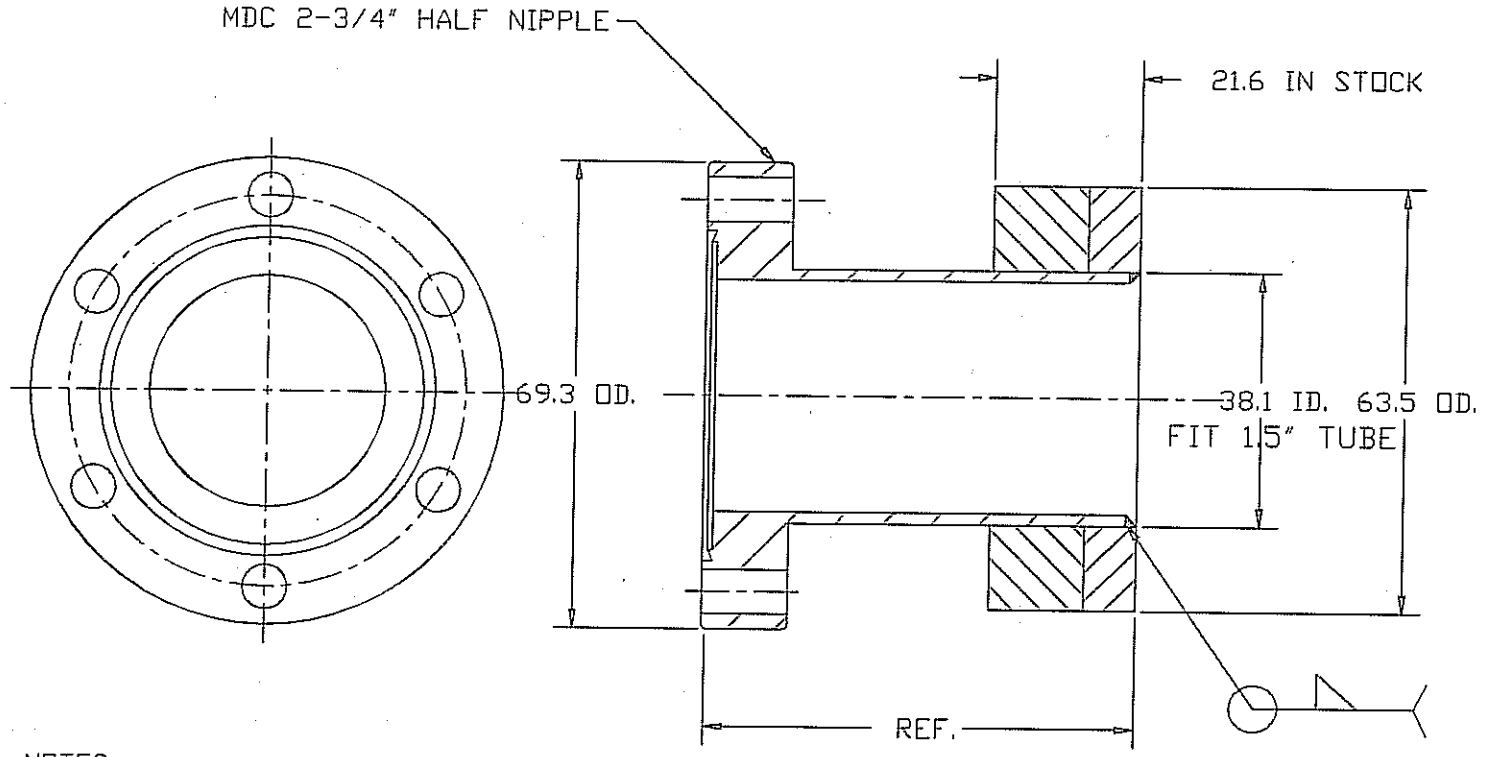

NOTES:
1) DIMENSIONS ARE IN mm
2) MATERIAL IS S.S.-AL BI-METAL
& MDC 2-3/4" HALF NIPPLE
3) QTY. 2

UNLESS OTHERWISE SPECIFIED TOLERANCES:
.XXX ± .005
.XX ± .02

TREATMENT
FINISH
ACT. WT. CALC. WT.

CONTRACT NO.
DRAWN DATE
CHECK
DESIGN
DESIGN ACTIVITY
CUSTOMER

WANG NMR, INC.
550 North canyons Parkway, Livermore, CA 94550

TITLE
S.S.-AL BI-METAL COUPLING
(FOR ELECTRIC
FEEDTHROUGH & NECK TUBE)

SIZE C
DWG NO. MICE-C008
SCALE DO NOT SCALE
RELEASE DATE
SHEET

Proprietary

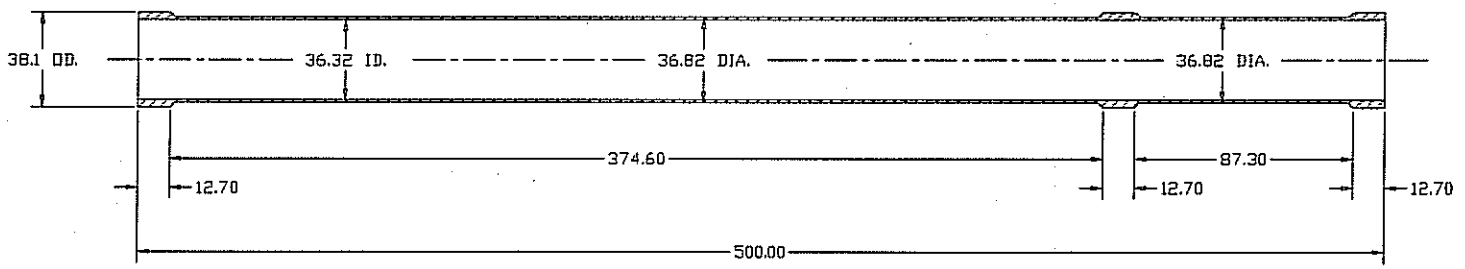

NOTES:
1) DIMENSIONS ARE IN mm
2) MATERIAL IS 1.5" OD. 0.035" WALL 304 S.S.TUBE
3) QTY. 1

WANG NMR, INC.
550 North Canyons Parkway, Livermore, CA 94550

NECK TUBE

D MICE-C009

Proprietary

REVISIONS				
ZONE	REV	DESCRIPTION	DATE	APPROVED

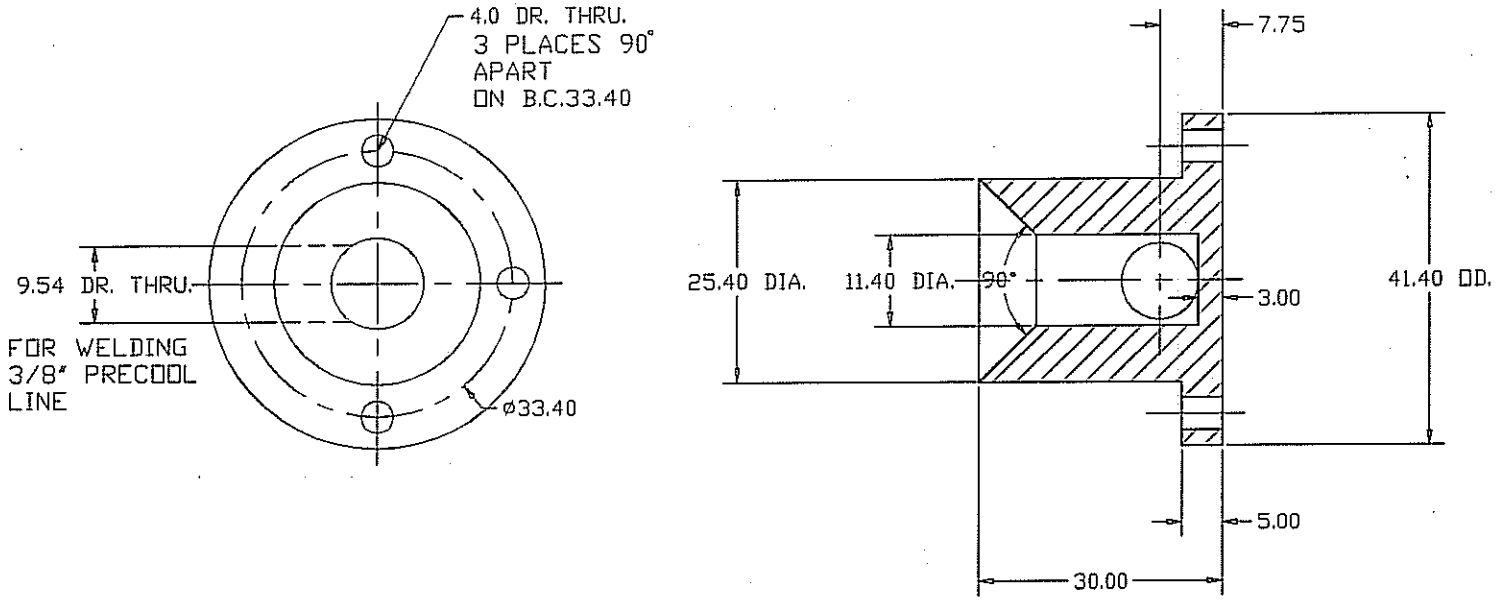

NOTES:
1) DIMENSIONS ARE IN mm
2) MATERIAL IS 304 S.S.
3) QTY. 1

UNLESS OTHERWISE SPECIFIED TOLERANCES:
.XXX ± .005
.XX ± .02

TREATMENT
FINISH
ACT. WT. CALC. WT.

WANG NMR, INC.
550 North canyons Parkway, Livermore, CA 94550

TITLE: PRECOOL NOZZLE

SIZE: C
DWG NO: MICE-C010
SCALE: DO NOT SCALE

Proprietary

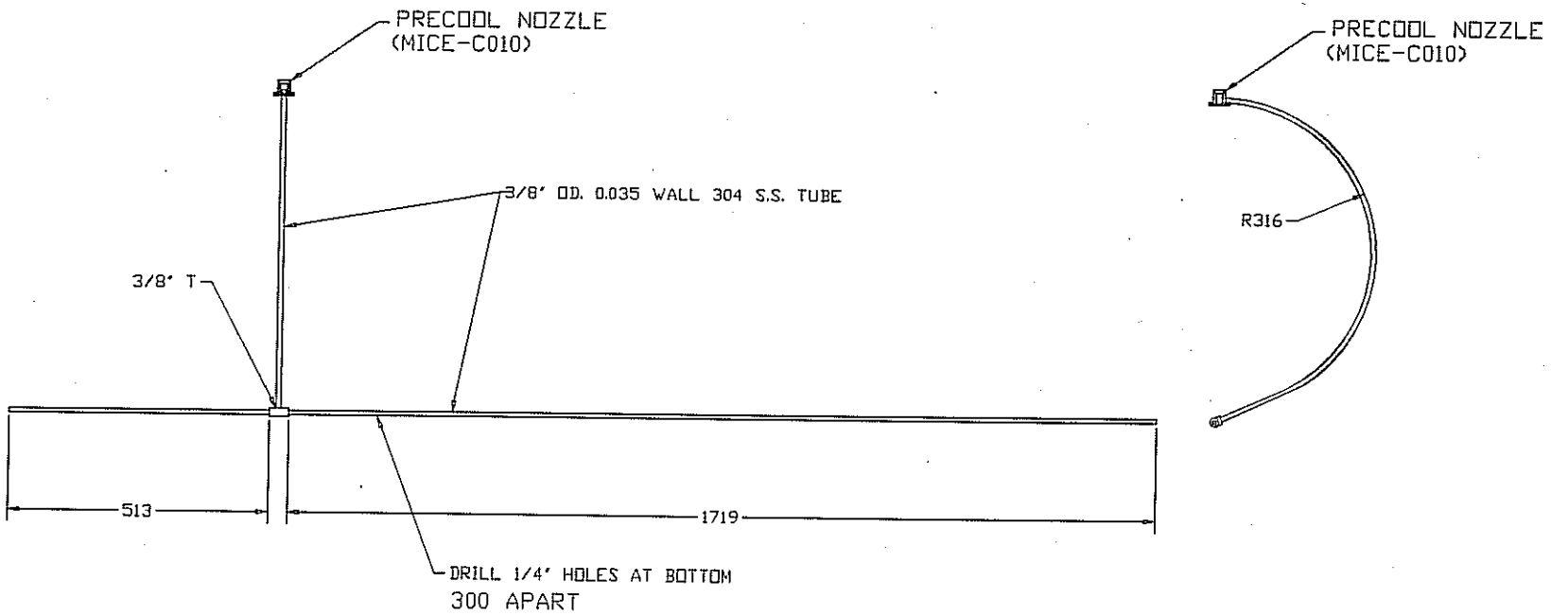

NOTES:
1) DIMENSIONS ARE IN mm

WANG NMR, INC.
550 North Canyons Parkway, Livermore, CA 94550

PRECOOL LINE

D | MICE-C011

DO NOT SCALE

Proprietary

REVISIONS				
ZONE	REV	DESCRIPTION	DATE	APPROVED

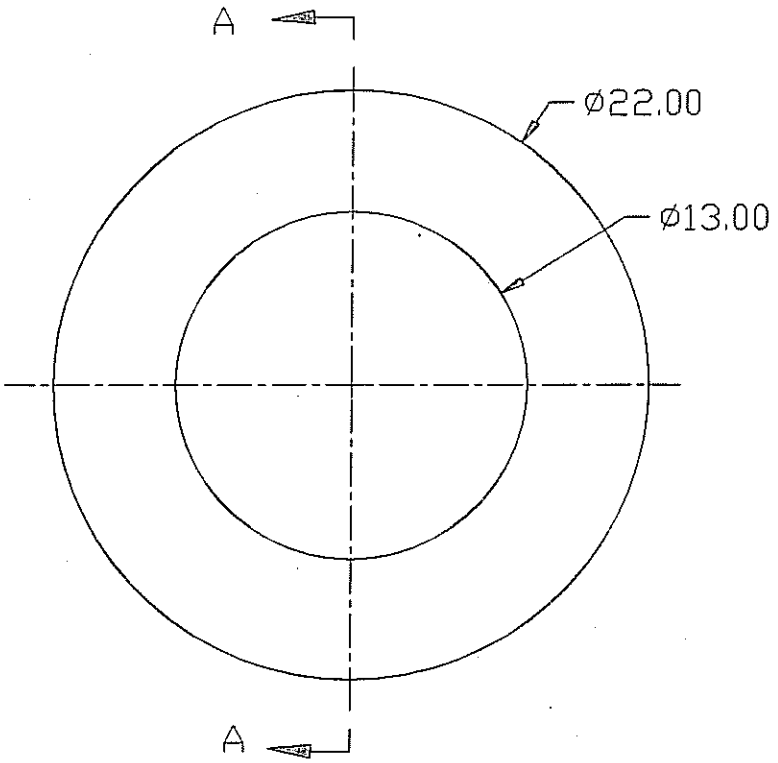

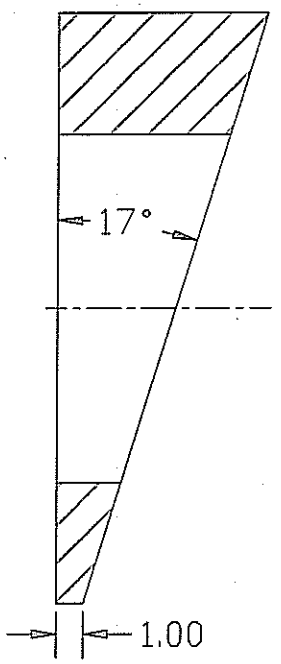

A-A

NOTES:
1) DIMENSIONS ARE IN mm
2) MATERIAL IS 304 S.S.
3) QTY, 32

UNLESS OTHERWISE SPECIFIED TOLERANCES: .XXX ± .005 .XX ± .02	CONTRACT NO.	WANG NMR, INC. 550 North canyons Parkway, Livermore, CA 94550
	DRAWN / DATE	TITLE: WASHER
	CHECK	
TREATMENT	DESIGN	
FINISH	DESIGN ACTIVITY	SIZE: C / DWG NO: MICE-C012
ACT. WT. / CALC. WT.	CUSTOMER	SCALE: DO NOT SCALE / RELEASE DATE / SHEET

Appendix II-6-1

Finite Element Stress Analyses of Coil and Reinforce Rings

Wang NMR Inc.

• 550 North Canyons Parkway • Livermore, CA 94551

Proprietary

END 2 compress Stress

IMAGES-3D
VER. 2.0

Unit
Kg/cm²

-2.089E+2
-1.920E+2
-1.750E+2
-1.581E+2
-1.412E+2
-1.243E+2
-1.073E+2
-9.045E+1
-7.353E+1
-5.660E+1
-3.967E+1

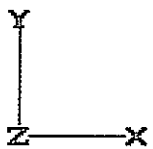

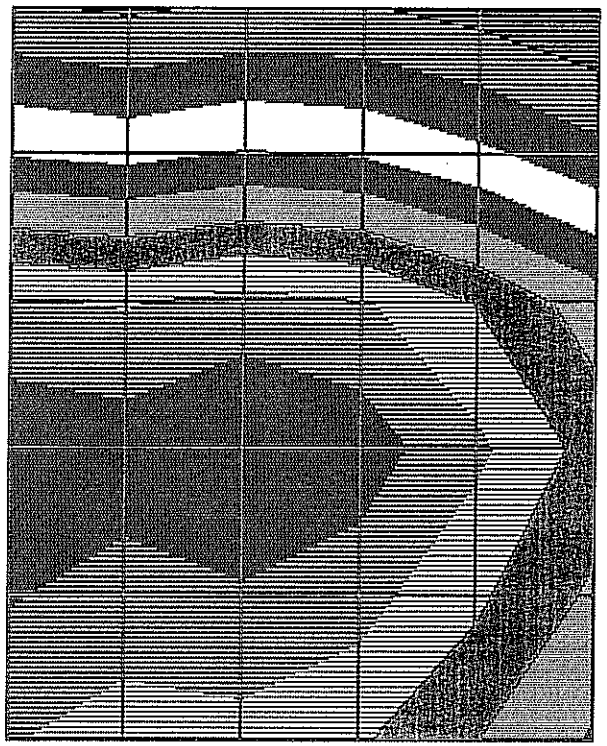

Load Case
1

Stress Contour Plot
Gl St: S22

8/10/ 6
6:42:52

Proprietary

END 2

hoop stress

IMAGES-3D
VER. 2.0

unit
kg/mm²

6.377E+2
6.602E+2
6.827E+2
7.052E+2
7.277E+2
7.502E+2
7.727E+2
7.952E+2
8.177E+2
8.402E+2
8.627E+2

Y
Z X

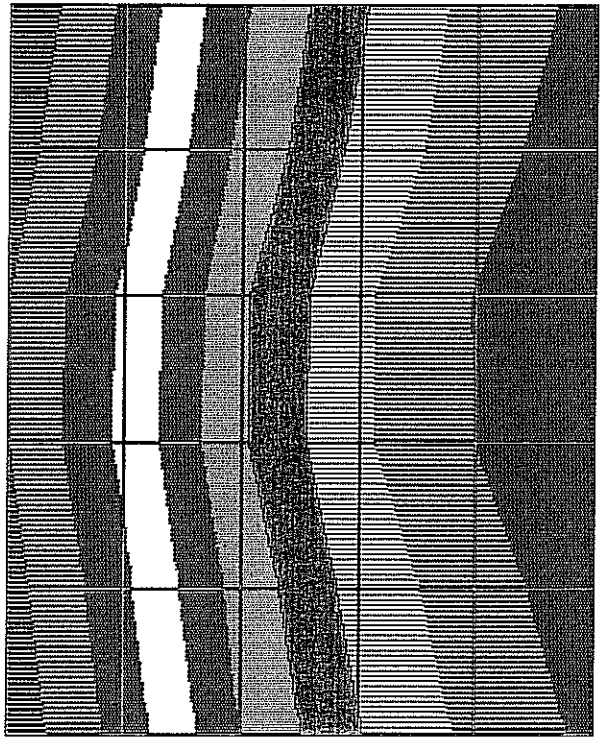

Load Case
1

Stress Contour Plot
G1 St: S33

8/10/ 6
6:42:24

Proprietary

CENTER

IMAGES-3D
VER. 2.0

Unit
kg/cm²

1.466E+0
5.276E+0
9.086E+0
1.289E+1
1.670E+1
2.051E+1
2.432E+1
2.813E+1
3.194E+1
3.575E+1
3.956E+1

Y
Z X

Load Case
1

Stress Contour Plot
G1 St: S22

8/10/ 6
5:26:56

Proprietary

CENTER

IMAGES-3D
VER. 2.0

unite
kg/cm²

7.173E+2
7.274E+2
7.375E+2
7.475E+2
7.576E+2
7.676E+2
7.777E+2
7.878E+2
7.978E+2
8.079E+2
8.180E+2

Y
Z X

Load Case
1

Stress Contour Plot
Gl St: S33

8/10/ 6
5:26:17

Proprietary

END 1

IMAGES-3D
VER. 2.0

unite
Kg/cm²

-1.561E+2
-1.435E+2
-1.308E+2
-1.182E+2
-1.056E+2
-9.299E+1
-8.035E+1
-6.772E+1
-5.508E+1
-4.245E+1
-2.982E+1

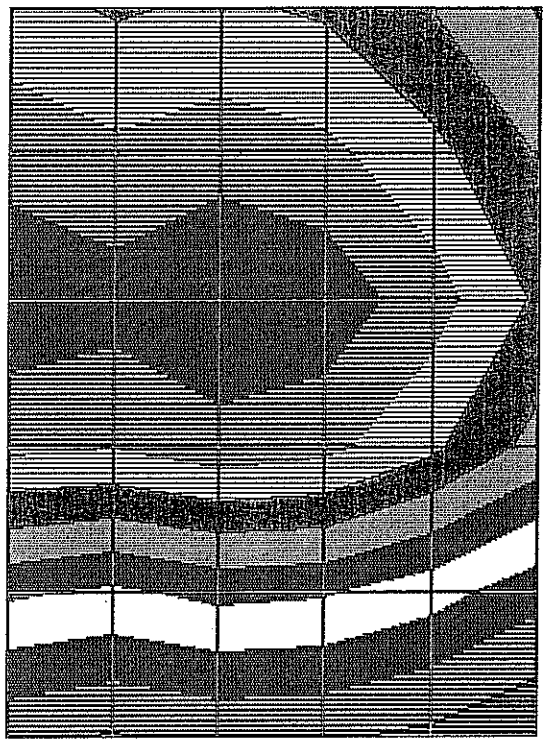

Y
Z X

Load Case
1

Stress Contour Plot
Gl St: S22

8/ 9/ 6
12:26:27

Proprietary

END 1

IMAGES-3D
VER. 2.0

unite
kg/cm²

6.366E+2
6.564E+2
6.762E+2
6.960E+2
7.158E+2
7.356E+2
7.554E+2
7.753E+2
7.951E+2
8.149E+2
8.347E+2

Y
Z X

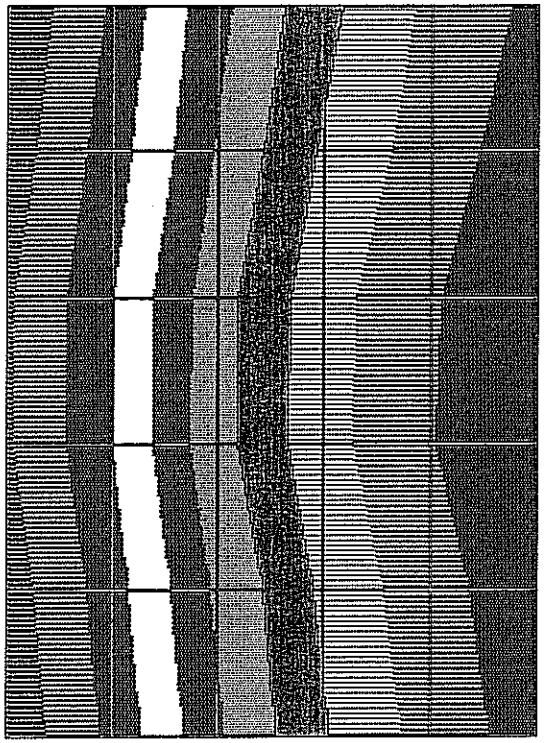

Load Case
1

Stress Contour Plot
Gl St: S33

8/ 9/ 6
12:25:59

Proprietary

MATCH 2

IMAGES-3D
VER. 2.0

unite kg/cm²

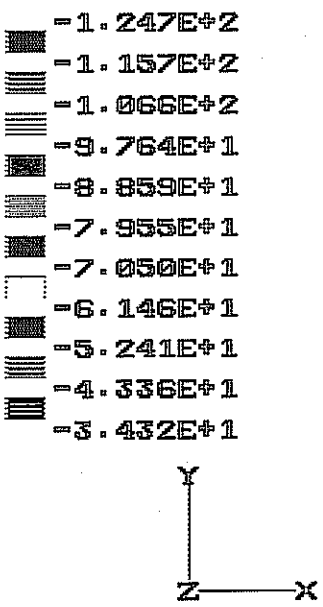

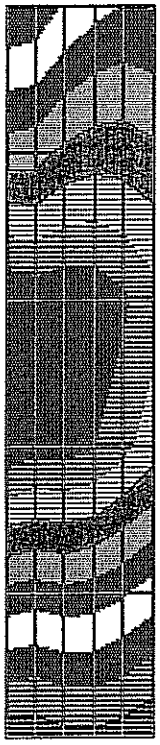

Load Case
1

Stress Contour Plot
G1 St: SZZ

8/ 9/ 6
11:39:21

Proprietary

MATCH 2

IMAGES-3D
VER. 2.0

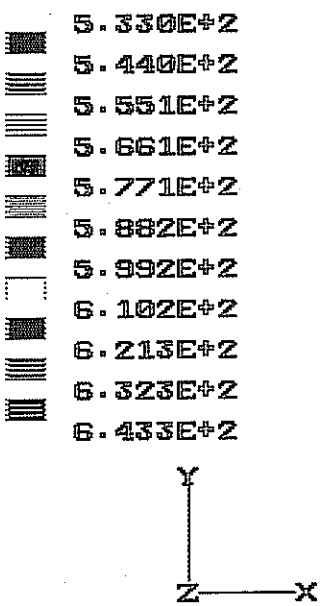

unite kg/cm²

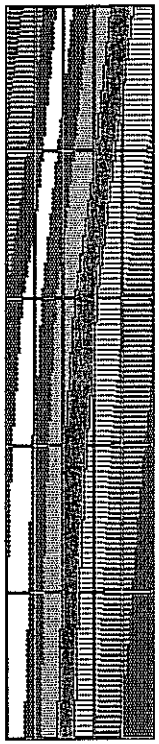

Load Case
1

Stress Contour Plot
Gl St: S33

8/ 9/ 6
11:38:53

Proprietary

MATCH 1

IMAGES-3D
VER. 2.0

unite kg/cm²

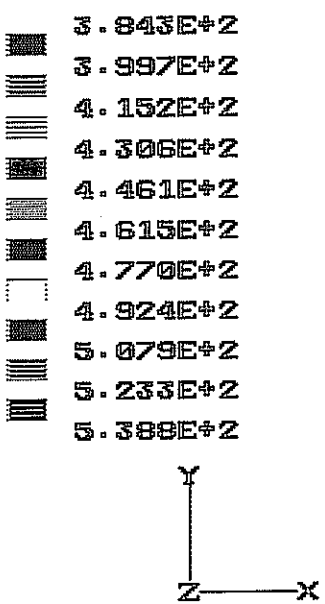

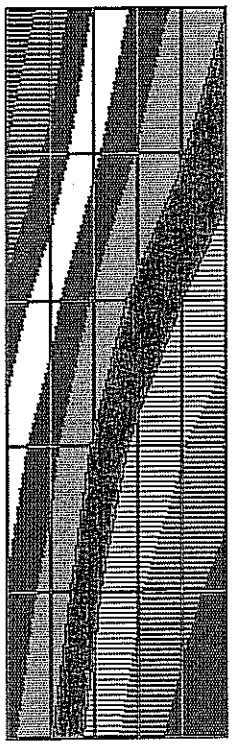

Load Case
1

Stress Contour Plot
Gl St: S33

8/ 9/ 6
10:36:20

Proprietary

MATCH 1

IMAGES-3D
VER. 2.0

unite kg/cm²

-1.825E+2
-1.685E+2
-1.546E+2
-1.406E+2
-1.266E+2
-1.127E+2
-9.878E+1
-8.483E+1
-7.087E+1
-5.692E+1
-4.296E+1

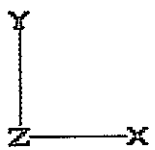

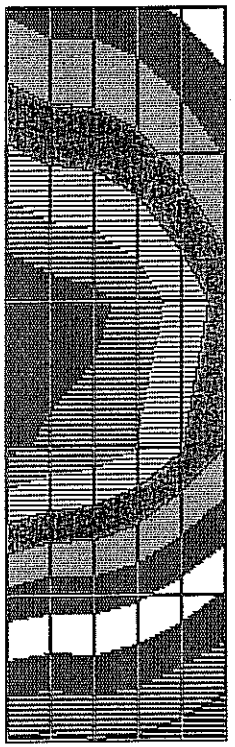

Load Case
1

Stress Contour Plot
G1 St: S22

8/ 9/ 6
10:37:25

Proprietary

4.2 K Reinforcement Stress.

unit kg/cm^2.

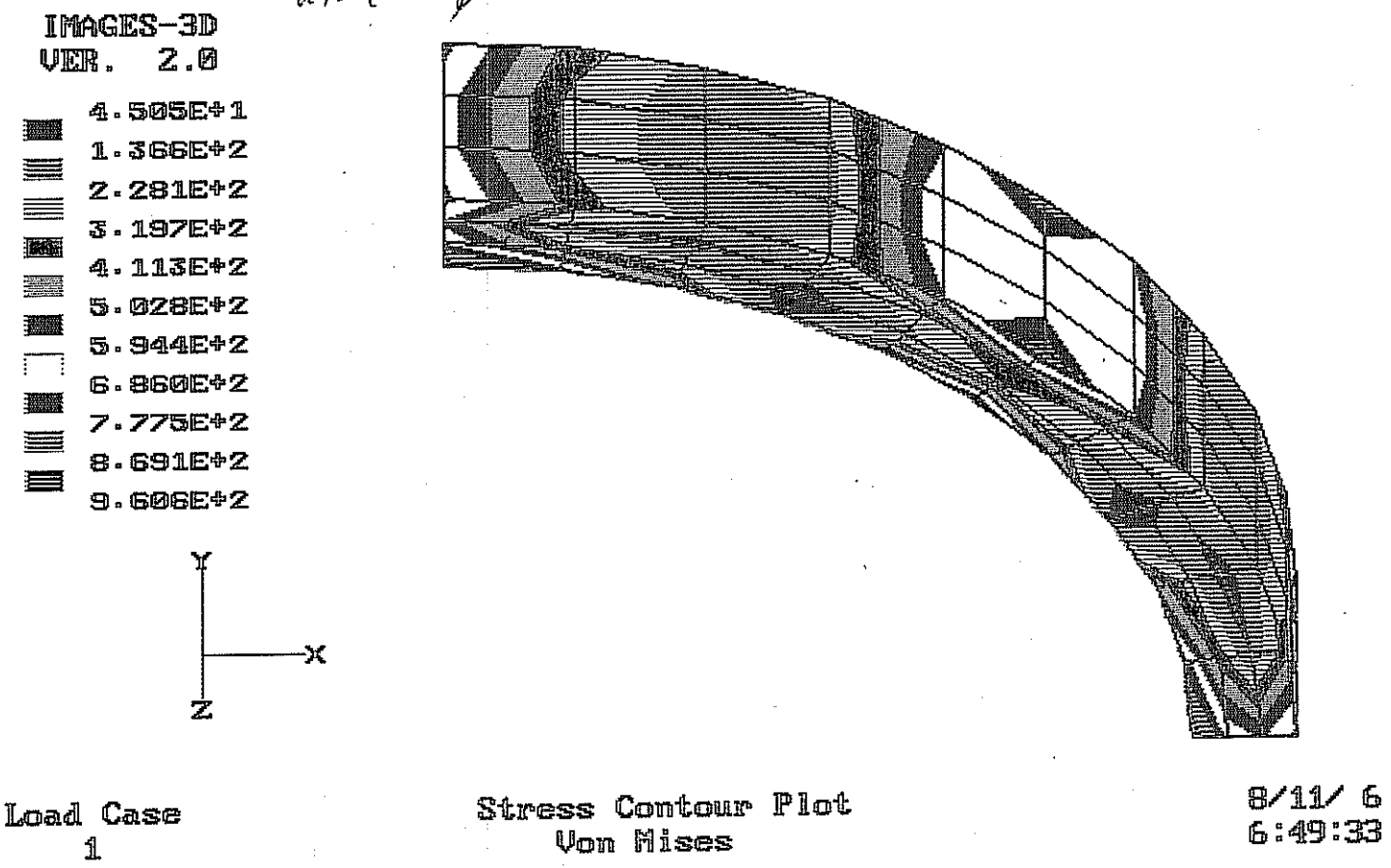

Proprietary

CHAPTER III

DESIGN OF CRYOSTAT ASSEMBLY (see Drwg MICE-0000)

III-1. Helium Vessel

Engineering Drawing for 4.2K vessel is shown in Appendix II-1-1.
The vessel will be made of ½" thick 6061T6 aluminum half cylinder halves as shown in Drwg MICE-C002. It will be welded with full penetration weld between two halves. At both end, it will be welded with ½"x½" 4043Al weld.

The helium vessel is designed with 45 psi pressure rating. The rupture disc pressure is set at 32 psig to 35 psig. The relief pressure will be 29 psig or lower.

The helium vessel is designed to satisfy pressure vessel code. It will be tested to pressure vessel code. The pressure vessel code design calculation is shown in Table III-1-1.

The total liquid helium volume is 200 liters.

The complete helium vessel component drawing is shown in Drwg MICE-C0000.
The helium vessel will be insulated with 15 layers of superinsulation.

III-2. Design of Conduction-Cooled Thermal Shield

Engineering Drawing for 60K shield system is shown in Appendix III-2-1.
The thermal shield assembly is shown in Drwg MICE-6000. The 70K shield will be made of 6061T6. It is estimated that the shield will be operated at 60K with two coolers.

The shield is cooled by conduction from the first stage of cryocooler. It will be made of 6061T6. Thickness of the shield is sized so that the (hottest) maximum temperature of shield does not exceed 80K.

(A) <u>The outer cylinder</u>

The OD of the shield will be 45" Φ. It will be made of 0.188" thick 6061T6 Al. The length will be 103.11". The engineering drawing is shown in Drwg MICE-6100.

Proprietary

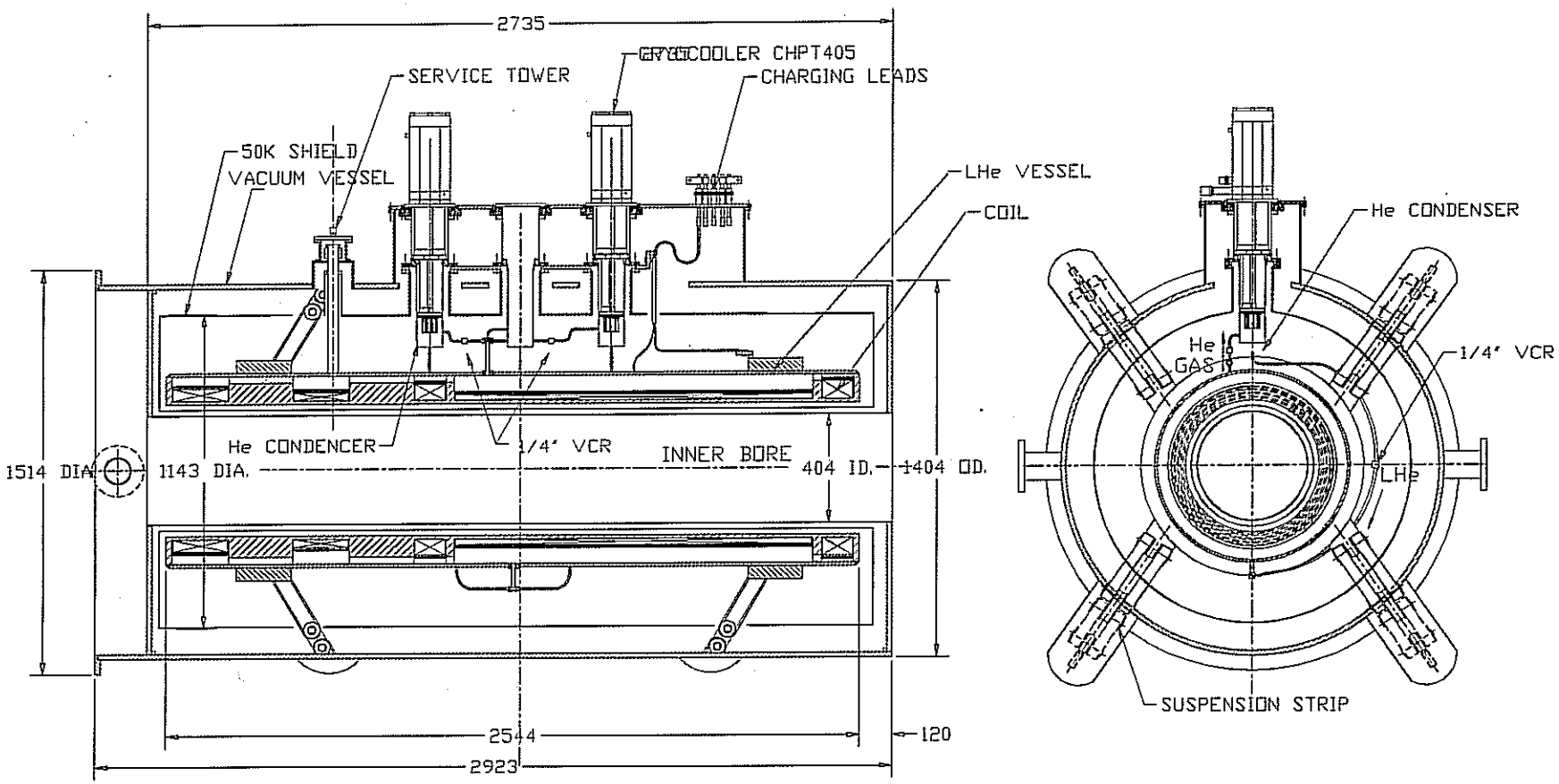

NOTES:
1) DIMENSIONS ARE IN mm

WANG NMR, INC.
550 North Canyons Parkway, Livermore, CA 94550

MICE TRACKER MODULE
4.5T TRACKER
SOLENOID MAGNET

D MICE-0000

Proprietary

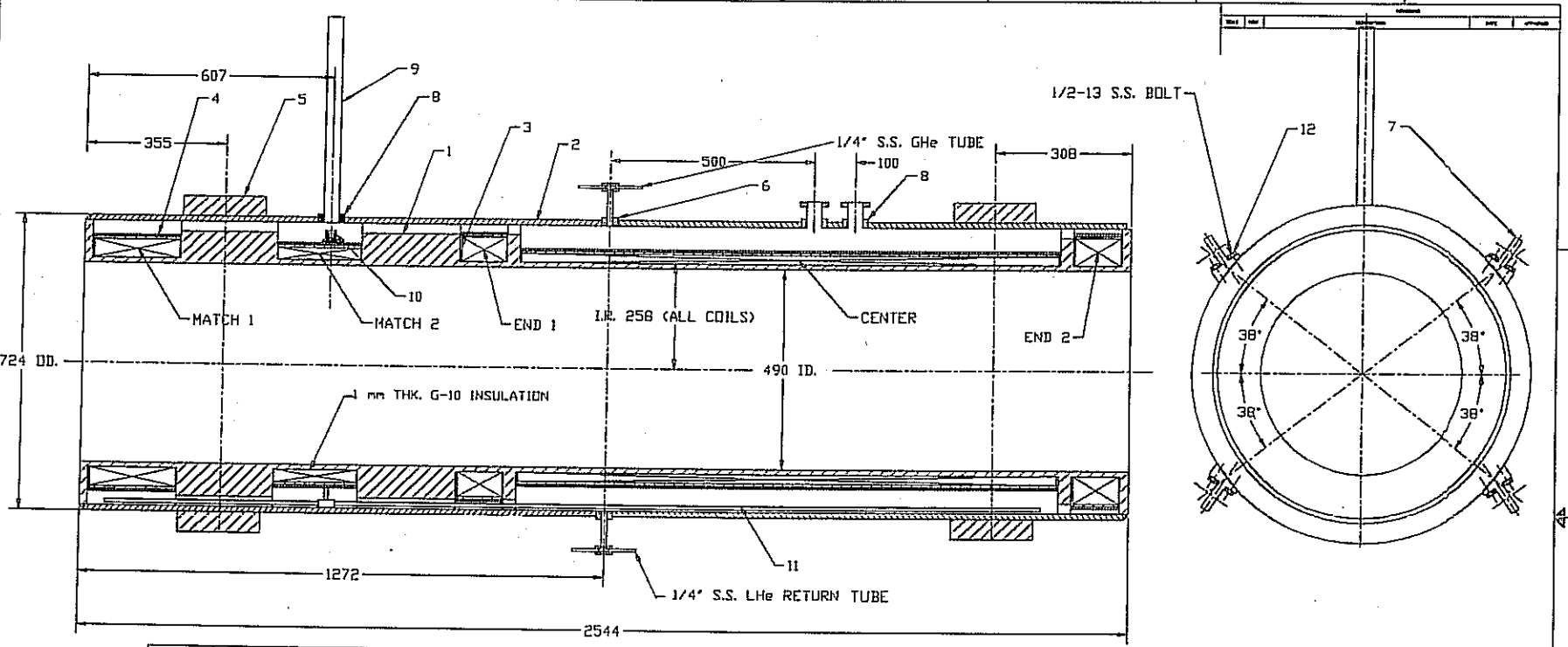

QTY.	ITEM	DWG. No.	DESCRIPTION	NOTE
32	12	MICE-C012	WASHER	304 S.S.
1	11	MICE-C011	PRECOOL LINE	304 S.S.
1	10	MICE-C010	PRECOOL NUZZLE	304 S.S.
1	9	MICE-C009	NECK TUBE	304 S.S.
2	8	MICE-C008	BI-METAL COUPLING	AL- S.S.
8	7	MICE-C007	COLD MASS SUPPORT BLACKET	316 S.S.
2	6	MICE-C006	BI-METAL COUPLING	AL- S.S.
2	5	MICE-C005	SUSPESION RING	6061T6
5	4	MICE-C004	REINFORCEMENT	6061T6
10	3	MICE-C003	SIDE INSULATION	G-10
2	2	MICE-C002	LHe VESSEL	6061T6
1	1	MICE-C001	COIL FORM	6061T6

NOTES:
1) DIMENSIONS ARE IN mm
2) REQD. VACUUM TIGHT (LEAK CHECK)

WANG NMR, INC.
MICE TRACKER MOUDLE
COIL STRUCTURE
D
MICE-C0000

Proprietary

(B) The inner cylinder shield

The OD of the inner shield will be 18.228" OD. It is made of rolled and welded 6061T6 aluminum plate with a thickness of 3/16". The length will be 103.11".

(C) The end disc shield

The disc will have an I.D. of 18.228", an OD of 44.625", and a thickness of 0.188".

III-3. Vacuum Vessel and its support assembly

Engineering Drawing for 300K vacuum vessel is shown in Appendix III-3-1.
The vacuum vessel will be made of 304SS. The non-magnetic vessel will be tested to satisfy the ASME pressure vessel code to sustain a pressure rating of 1 atmosphere pressure. Engineering Drawing for magnet support system is shown in Appendix III-3-2. The support system will be made of 304SS.

III-4. Design of Neck Tube for Cryogen Feed and Quench Vent

From instrument wire support (G-10), all instrumentation wires will be routed upwards through a G-10 tube, employing 0.005 Cu Ni wire Teflon insulated. These wires will be ended to a multiple pin feedthru at the top of helium neck tube.

Drwg MICE-C009 shows the 38.1mm OD neck tube with 36.32mm ID. The OD is machined to 36.82 mm to cut down solid conduction to 4.2 K and to 64 K. It is made from 1.5'' OD x 0.035'' wall 304LSS seamless tube.
At bottom of the neck tube we install precool nozzle (Drwg MICE-C010) and precool line (Drwg MICE-C011) to allow cooldown evenly along the length.
At top the neck tube, we install bellow to take care thermal contraction. In addition a rupture disc, a relief valve and a transfer line quick connect/ disconnect are installed. There are one 38 mm diameter neck tubes with thermal intercept to the first stage of the cooler. The intercept will be keep below 70K.

PRESSURE RATING AND PRESSURE RELIEF

The neck tube is part of helium vessel. Thus, the design internal working pressure is 44 psig and the design external working pressure must be 15 psig. The relief valve which is attached to the neck tube is set at 29 psig or lower. The rupture disc pressure is set between 32 psig and 44 psig. The rupture disc is connected to the bottom of the neck tube.

45 or 1st pg. of chap 3

45 or pg III

The neck tubes are also served as quench vent. The neck tubes must be designed to satisfy ASME pressure vessel code.

Proprietary

Proprietary

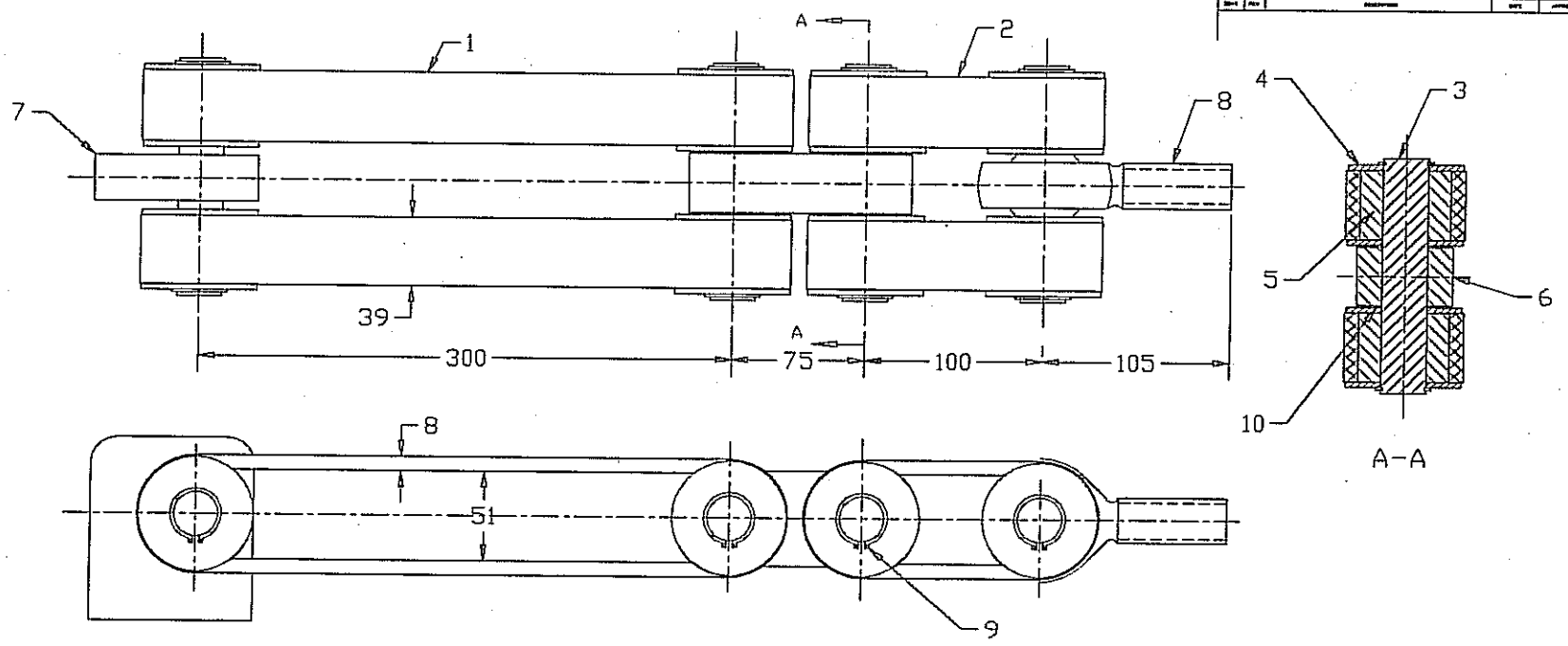

QTY.	ITEM	DWG. No.	DESCRIPTION	NOTE
6	10	MICE-L007	SPACER	304 S.S.
8	9		1" RETAIMAIN RING	
1	8		1" HIGH STRENTH ROD END	
1	7	MICE-C007	4.2K BRACKET	304 S.S.
1	6	MICE-L006	50K BRACKET	304 S.S.
8	5	MICE-L005	BUSHER	304 S.S.
16	4	MICE-L004	WASHER	304 S.S.
4	3	MICE-L003	PIN	INCONEL
2	2	MICE-L002	50K-300K FIBER GLASS STRIP	S2 GLASS
2	1	MICE-L001	4.2K-50K FIBER GLASS STRIP	S2 GLASS

NOTES:
1) DIMENSIONS ARE IN mm
2) QTY. 8 SET

WANG NMR, INC.
530 North canyons Parkway, Livermore, CA 94550

MICE TRACKER MODULE
25T COLD MASS
SUPPORT

D MICE-L000

III-5. Cold Shippable Cold Mass Support Design

Engineering Design Drawings for cold mass support are shown in Appendix III-11-1. The 4.2K cold mass will be supported with a low heat leak, proprietary designed unidirectional fiberglass laminate. The suspension system will be configured so that it provides rotational restraint. As shown in Figure I-2, the support strength will be such that the dynamic shipping g-load will be satisfied (ie. up 1g, down 3g, transverse 2.5g). Therefore, the system is cold shippable after the magnet is discharged to zero field. The proprietary design features includes but not limited to a special angles such that the cold end when it is cooled down will trace through a path that will neither increase nor decrease the stress of links. The 60K is suspended in a G-10 rod. The 4.2K cold mass suspension subsystem is shown in Drwg MICE-L-000.

III-6. Cryogen Free Cryogenic Design, Hi-Tc Current Leads and Crycooler Specifications (see Drwg MICE-crycool-001)

The major heat leak to 4.2K are the power leads (350A, 6 ea and 50A, 2 ea). In order to be cryogen free, Hi-Tc leads must be employed. We have developed specifications for the Hi-Tc leads and the normal leads with vacuum feedthru as shown in Table III-6-1. It is seen that the Hi-Tc leads will still have a heat leak of 0.85W to 4.2K. Furthermore, the normal leads will generate 12W per lead or 72W total to the 50-60K thermal shields system.

The detail heat leak tabulation due to current leads is shown in Table III-6-1. Magnet cryostat contributes 0.495W to 4.2K and 18.4W to thermal shields (50 to 64K). For each tracker solenoid, two Cryomech 1.5W pulse tube cryocoolers (model PT415) are proposed to provide cryogen-free refrigeration for the Hi-Tc leads, normal leads, and cryostat heat leak. The combined refrigeration power will be 3.0W at 4.2K and 120W at 60K.

Each Cryomech Model PT415 will have 1.5W cryocooler capability. The cooler specification is shown in Table III-6-2. PT415 cold head dimensions and PT 415 first stage and second stage performance are attached for reference.

Proprietary

CHPT415 | REV –

ALL INFORMATION CONTAINED IN THIS DOCUMENT S
USED FOR REFERENCE PURPOSES ONLY & ARE SUBJ
CHANGE WITHOUT PRIOR NOTIFICATION. ALSO, THIS DOC
IS CONSIDERED PROPRIETARY & THE SOLE PROPERTY OF
CRYOMECH, INC. & SHOULD NOT BE REPRODUCED IN ANY
MANNER WITHOUT PRIOR WRITTEN APPROVAL.

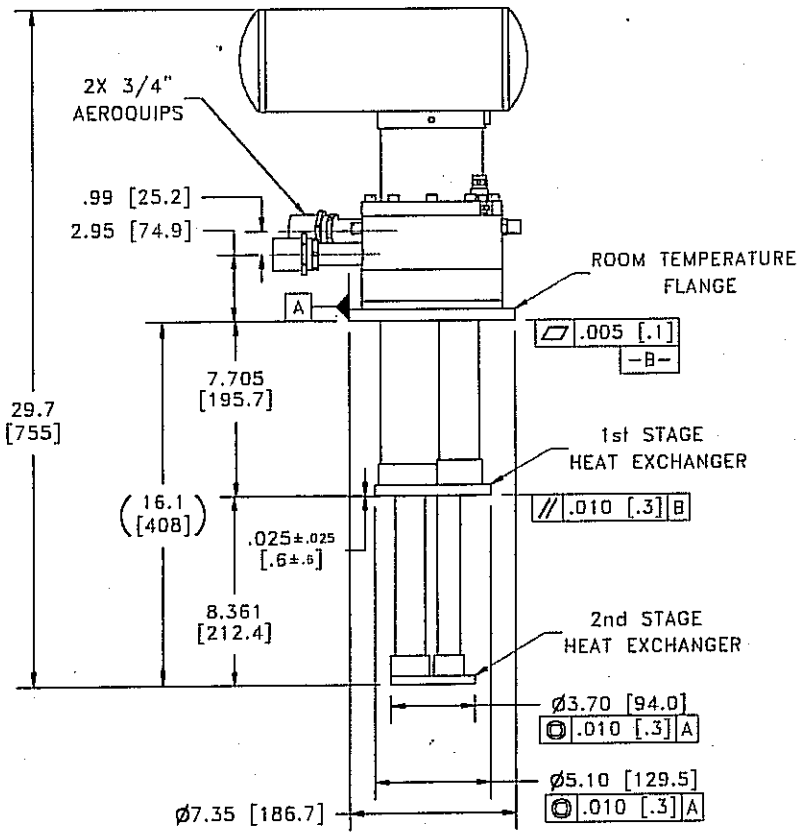

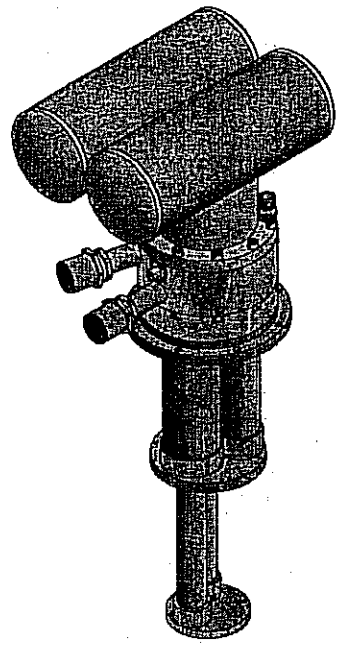

** SPECIAL NOTE: COLD HEAD MUST
BE OPERATED COLD END DOWN **

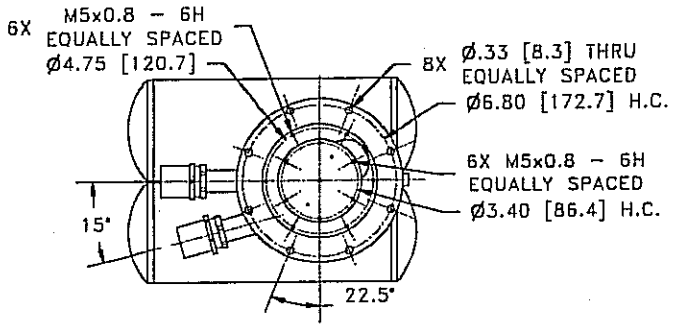

THIRD ANGLE PROJECTION

CRYOMECH, INC

113 FALSO DRIVE SYRACUSE N.Y. 13211
Tel: (315)455-2555 Fax: (315)455-2544

ALL DIMENSIONS ARE IN INCHES
TOLERANCES: FRACTIONS ±1/64 DECIMALS XXX=±.005 XX=±.01 X=±.1
ANGLES ±.5° ALLOVER FINISH 25 Ra
CONCENTRICITY .005 TOTAL INDICATOR RUN OUT
PERPENDICULARITY ±.002 (UNLESS OTHERWISE SPECIFIED)

NAME: CHPT415 OUTLINE DRAWING			
PART #: CHPT415	SHT 1	OF	1
MATERIAL: PT415			
DWN BY: AO DATE: 02NOV05	SCALE: .150	DWG SIZE:	A
1ST CHK: DATE:	2ND CHK: DATE:		

968	–	–	INITIAL RELEASE	02NOV05

Proprietary

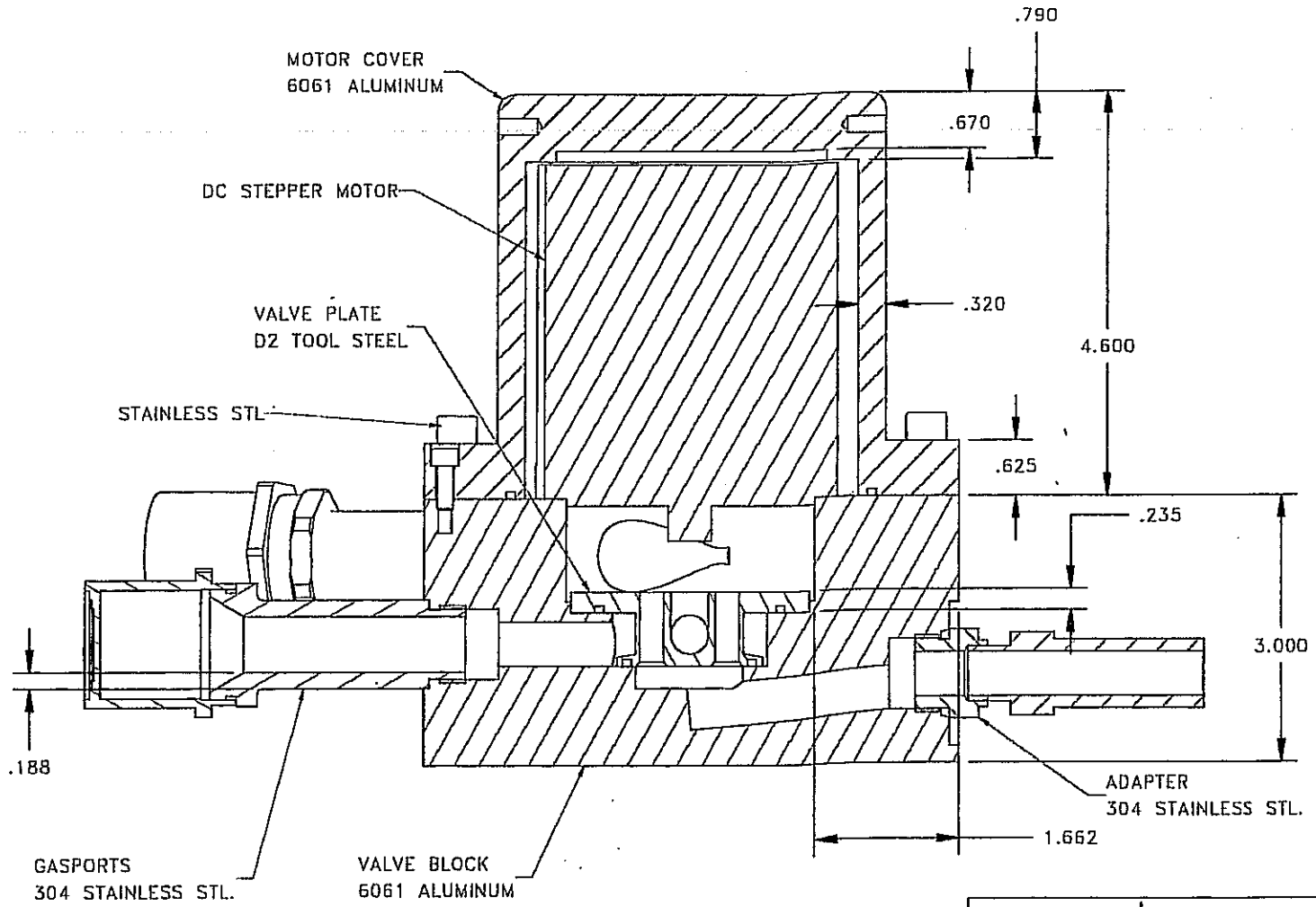

THIRD ANGLE PROJECTION

CRYOMECH, INC

113 FALSO DRIVE SYRACUSE N.Y. 132
Tel:(315)455-2555 Fax:(315)455-254

ALL DIMENSIONS ARE IN INCHES
TOLERANCES: FRACTIONS ±1/64 DECIMALS XXX=±.005 XX=±.0
ANGLES ±.5° ALLOVER FINISH
CONCENTRICITY .005 TOTAL INDICATOR RUN OUT
PERPENDICULAR ±.002
(UNLESS OTHERWISE SPECIFIED)

NAME:			
DWG #:		SHT	OF
MATERIAL:			
DWN BY:	DATE:	SCALE:	DWG SIZE:
1ST CHK:	DATE:	2ND CHK:	DATE:
CUST:			

Proprietary

NEW PRODUCT!

CRYOMECH

PT415

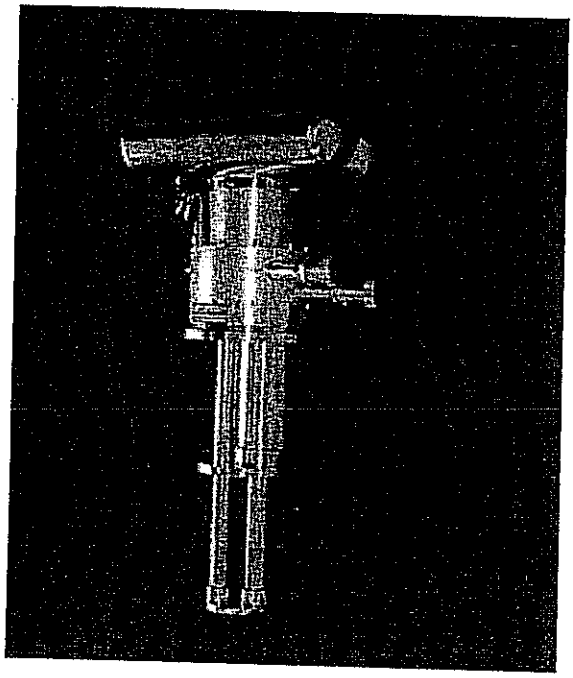

The PT415 is the largest 4K Pulse Tube yet!

Cryomech newest 2 stage pulse tube is designed to provide 1.5 W at 4.2K and operates with the CP1010, our latest line of compressor packages.

The PT415 is available with our standard vibration elimination options such as remote motor, bellows assembly, and low vibration assembly.

Certified Performance
(50Hz and 60Hz)
2nd Stage: 1.5W @ 4.2K
1st Stage: 40W @ 45K

Cool down time to 4.2K:
< 60 min

CP1010 Compressor
(Water cooled only)
Input power: 11kW

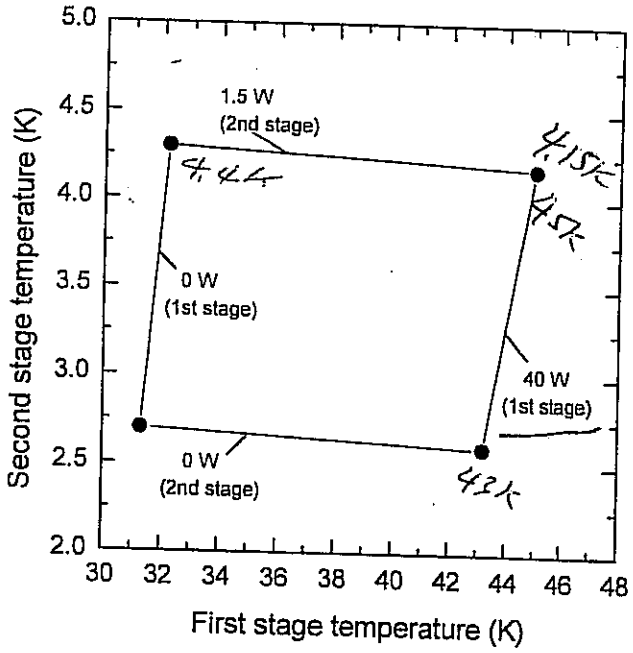

PT Warranty: 3 years or 12,000 hours (whichever comes first) on all parts and materials

CRYOMECH 113 Falso Drive, Syracuse, New York 13211 USA
Ph. 315-455-2555 | Fax. 315-455-2544
www.cryomech.com sales@cryomech.com

Proprietary

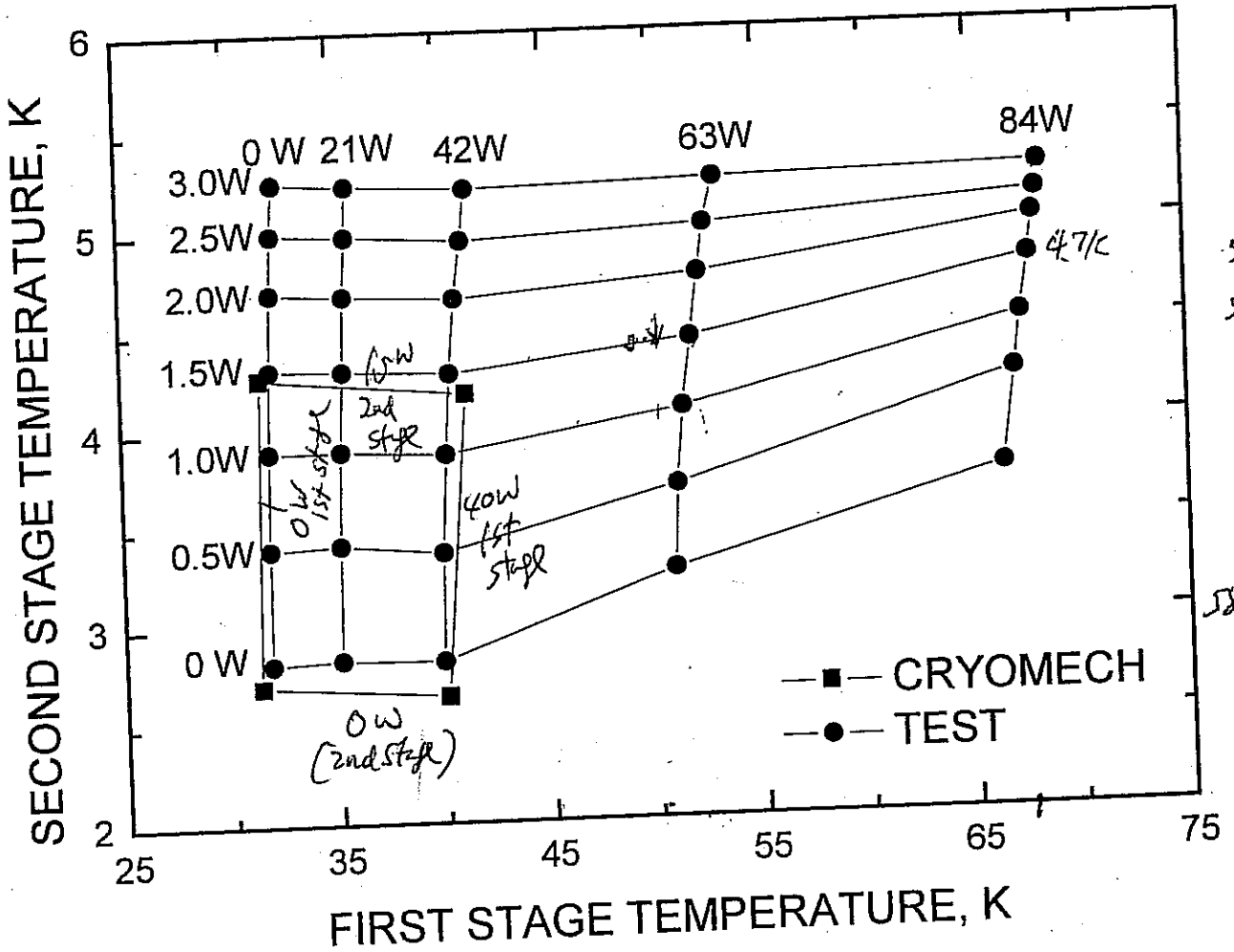

2 PT415
50K 58W 1st stage 70K 63W
2nd 4.5K 1.5W
2 & A
58x2 70K 63x2=
4.5K 1.5x2

70K 84W

Proprietary

TABLE III-6-1
Hi-Tc LEADS, VACUUM FEEDTHRU, AND NORMAL LEADS SPECIFICATION

A. 350A Lead – Hi-Tc (6 ea), Total Heat Leak = 0.25W/ pair at 4.2K and 28W at 60K

A-1 Specification – 500A at 64 K@ OG, 450A at 64 K@ 1000 G parallel field, 475A at 77K @ 100 G perpendicular field.

A-2 Normal Operation – Hot end at 60K or colder at $I \leq 350A$

A-3 Emergency Operation – Hot end at 80K or colder at $I \leq 350A$

A-4 Total Heat Leak at 60K at I = 300A 12W x 6 = 72W

A-5 Total Heat Leak to 4.2K at I = 300A .125W x 6 = 0.750W

A-6 Vacuum Feed Thru for 350A

A-7 Normal Leads for 350A

B. 50A Lead – Hi-Tc (2 ea) Total Heat Leak for 2 leads = 0.1W at 4.2K and 15W at 60-70K

B-1 Specification –150A at 64 K@ OG, 135A at 64 K@ 1000 G parallel field

50A at 80K @ 100 G perpendicular field

B-2 Normal Operation – Hot end at 60K or colder $I \leq 50A$

B-3 Emergency Operation – Hot end at 80K or colder $I \leq 50A$

B-4 Total Heat Leak to 60K at I = 50A 3.75W per lead or 7.5W total

B-5 Total Heat Leak to 4.2K at I = 50A 0.025W x 2 = 0.05W for 2 leads

B-6 Vacuum Feedthru for 50A

B-7 Normal Leads for 50A

Proprietary

TABLE III-6-2
1.5W CRYOMECH MODEL (PT 415)
PULSE TUBE CRYOCOOLER SPECIFICATION

CRYOCOOLER OUTPUT –
1.5W at 4.2K
45W at 50K (Max. 84W at 70K, 63W at 55K, or 40W at 45K)
Coldhead weight 25 kg, dimension 186.7 mm D x 389 mm L x 670 mm H)

COMPRESSOR MODEL CP1010 (WEIGHT 214 KG)
580W x 610 L x 910 mm H
Power Input – AC 220/ 230V or 460 VAC/ 60Hz, 3 phases
Max. 11.0KW
Cooling water – flow rate $\geq$ 11.5 liter/ min @27°C
Accessories – Input power cable 5 m
- Flexible gas line – 20 m

III-7. Heat leak calculations of 80k shield

Heat Leak Analyses of 80K Shield

(i.) Heat leak through one neck tubes of the Helium Vessel

The neck tube will be 1.5" OD, a 0.010" wall and a length from 300K to 70K of 8.73 cm

$$Q_{ss} = A/L \int_{70} k dT = [(0.304)/ (8.73)] \times 27.12 = 0.944W$$

(ii.) Heat leak through 300K to 80K Radiation

We compute the 80K surface area A $\approx$ 149,468 cm^2. For 60 layers of superinsulation in a vacuum gap, X = 2.54 cm, the measured effective thermal conductivity of superinsulation is:

Proprietary

(iii.) Heat leak through LN2 cold mass suspension

The magnet coil cryostat 80K shield is suspended by eight S-2 fiberglass links which have a crosssection of 0.03125 in^2 (0.2016 cm^2) each. The length of the link will be about 7.62 cm or 3 inches. Since

$$\int_{80}^{300} kdT = 0.642 \text{ W/ cm}^2$$

we have $Q = 8\ (A/L) \int_{80}^{300} kdT = 8[(0.2016 \times 0.642)]/\ 7.62] = 0.136W$.

(iv.) The heat intercept (from 300K to 80K) to the shield through the 4.2K coil cold mass suspension system

The 4.2K cold mass suspension system consists of eight supports. Each support consists of a pair of S-2 glass unidirectional race track which have 0.8 cm x 3.9 cm crossection of 3.12 cm^2. The length of the link is 10.0 cm. Since

$$\int_{80}^{300} kdT = 0.642 \text{ W/ cm}^2,$$

The total heat intercept is:

$$8 \times [(3.12 \times 4)/\ 10] \times 0.642 = 6.41W$$

The total sum of steady heat leak to the LN_2 system is :

$$72W + 8W + 1.082W + 10.745W + 0.136W + 6.4W = 98.373W$$

80K shield has a total heat leak of 98.373W without sleeve, or 105.37W with sleeve. This is to compare total cryocooler capacity of 116W at 64 K.

Each Cryomech 415 pulse tube cooler will have a capacity of 40W at 45K or 58W at 64K or 63W at 70K for 1st stage while the second stage producing 1.5W at 4.2K.

III-8. Heat Leak to the 4.2K Coil Helium Vessel

(i.) Heat leak from 80K through the 1.5" diameter with a 0.010" wall

The quench vent neck tube will be 1.5" OD tubes with 0.010" wall and a length of 37.4 cm from 60K to 4.2K.

The heat leak through the S.S. tube is:

$$Q_{ss1} = A/L \int_{4.2}^{60} kdT = [(\pi \times 1.5 \times 0.010 \times 6.452)/\ 37.4] \times 3.5 \text{ W/cm} = 0.028W$$

Proprietary

(ii.) Heat leak through the radiation from 80K to 4.2K

The total surface area of the 4.2K magnet helium vessel is 101436 cm^2. The measures effective heat transfer through 15 layers of superinsulation is 3.1×10^{-7} W/ cm^2. Therefore,

$$Qr(4.2K) = 3.1 \times 10^{-7} \times 101{,}436 = 0.0314W = 31.4\ mW$$

(iii.) The heat leak through Hi-Tc leads – 0.85W

(a) Six 300A Hi-Tc leads – 0.125W x 6 = 0.75W

(b) Two 50A Hi-Tc leads – 0.05W x 2 = 0.10W

(iv.) The heat leak through fifty-five permanently connected instrument wires

We shall have 55 wires for instrumentation leads, between 4.2 K and 300 K. The heat leak through 55 wires from 300K to 4.2K using 0.005" dia. cupronickel wire of 40 cm length is 8.25 mW total.

(v.) Heat leak through the cold mass suspension system

The cold mass suspension system is designed for the dynamic shipping loads of the cold mass. There are a total of eight cold mass supports. Each support consists of a pair of links with a crossection of 3.12 cm^2 x 4 or 12.48 cm^2. The length of the link from the 77K intercept to the 4.2K is 30 cm. Since :

$$\int_{4.2}^{80} k dT = 0.0926\ W/cm^2,$$

the total heat leak through the eight cold mass suspension system is :

$$8 \times (A/L) \int_{4.2}^{80} k dT = 8 \times [(3.12 \times 4)/30] \times 0.0926 = 0.308W.$$

Summing up (i) to (v), we have

4.2K Total Sum

= 0.028W + 0.0314W + 0.85W + 0.00825W + 0.308W = 1.225W (without sleeve)
= 1.436W (with sleeve)

Proprietary

III-9 Additional heat leak estimation if sleeve tube is used to assemble / disassemble a pulse tube cryocooler

(i) solid conduction from 300 k to 60 k = 3.2W

ASME code calculation shows the tube OD 5.24" will need a wall of 0.020" thick to support 45 psi, therefore

$$Q = A/L \int_{60}^{300} kdt = 0.122 \times 28.6 = 3.2 \text{ W}$$

Where $A = \pi DT = 3.14 \times 5.87 \times 0.020 \times 6.425 = 2.378 \text{ cm}^2$
$L = 7.705 \times 2.54 = 19.572$

(ii) solid conduction from 60 k to 4.2 k = 0.108 W

ASME code calculation shows the tube OD 3.83" will need a wall of 0.015" in thickness to support 45 psi, therefore

$$Q = A/L \int_{4.2}^{60} kdt = 1.164/30.48 \text{ X } 1.98 = 0.108 \text{ W}$$

Where $A = \pi DT = 3.14 \times 3.83 \times 0.015 \times 6.425 = 1.164 \text{ cm}^2$
$L = 8.36" = 8.36 \times 2.54 = 21.23\text{cm}$

(ii) gas conduction from 60 k to 4.2 k = 0.103 W (gas conduction from 300K - 60K ?)

<u>Summary</u>
<u>For two cryocooler with 2 sleeve tube</u>

Additional heat load to 4.2K is (0.108+0.103) x 2 = 0.211W x 2 = 0.422W
Additional heat load to 60K 3.5W x 2 = 7.0 W

14

Proprietary

(iii) Gas conduction from 300 K to 60 K = ~~0.336 W~~ 0.5 W

Thermal conduction in annular vapor space between stages 1 & 300 K for PT405 Cryocooler

OD in.	5.3		
ID1 in	1.59		
ID2 in	2.036		
area sq i	16.8206	rea sq m	0.01085
L in	7.7	L m	0.19558
		k W/m-K	0.1102
dT	20	**Q W**	**0.336**

0.6 W

He at 1.1 bar -Mean thermal conductivity

dT	Temperature (K)	Therm. Cond. (W/m*K)		mean Therm. Cond. 5 to T (W/m*K)
5	60	0.052562	0.26281	0.0526
5	65	0.055391	0.276955	0.0540
5	70	0.058158	0.29079	0.0554
5	75	0.060868	0.30434	0.0567
5	80	0.063527	0.317635	0.0581
5	85	0.066138	0.33069	0.0594
5	90	0.068706	0.34353	0.0608
5	95	0.071232	0.35616	0.0621
5	100	0.073721	0.368605	0.0634
5	105	0.076174	0.38087	0.0646
5	110	0.078594	0.39297	0.0659
5	115	0.080982	0.40491	0.0672
5	120	0.083341	0.416705	0.0684
5	125	0.085671	0.428355	0.0696
5	130	0.087974	0.43987	0.0709
5	135	0.090252	0.45126	0.0721
5	140	0.092506	0.46253	0.0733
5	145	0.094737	0.473685	0.0745
5	150	0.096945	0.484725	0.0757
5	155	0.099133	0.495665	0.0768
5	160	0.1013	0.5065	0.0780
5	165	0.10345	0.51725	0.0792
5	170	0.10558	0.5279	0.0803
5	175	0.10769	0.53845	0.0814
5	180	0.10978	0.5489	0.0826
5	185	0.11186	0.5593	0.0837
5	190	0.11392	0.5696	0.0848
5	195	0.11596	0.5798	0.0859
5	200	0.11799	0.58995	0.0870
5	205	0.12	0.6	0.0881
5	210	0.12201	0.61005	0.0892
5	215	0.12399	0.61995	0.0903
5	220	0.12596	0.6298	0.0914
5	225	0.12793	0.63965	0.0925
5	230	0.12987	0.64935	0.0935
5	235	0.13181	0.65905	0.0946
5	240	0.13373	0.66865	0.0957
5	245	0.13564	0.6782	0.0967
5	250	0.13754	0.6877	0.0978
5	255	0.13943	0.69715	0.0988
5	260	0.14131	0.70655	0.0998
5	265	0.14318	0.7159	0.1009
5	270	0.14504	0.7252	0.1019
5	275	0.14688	0.7344	0.1029
5	280	0.14872	0.7436	0.1039
5	285	0.15055	0.75275	0.1050
5	290	0.15237	0.76185	0.1060
5	295	0.15418	0.7709	0.1070
5	300	0.15598	0.7799	0.1102
5	300	0.15598	0.7799	-0.4539

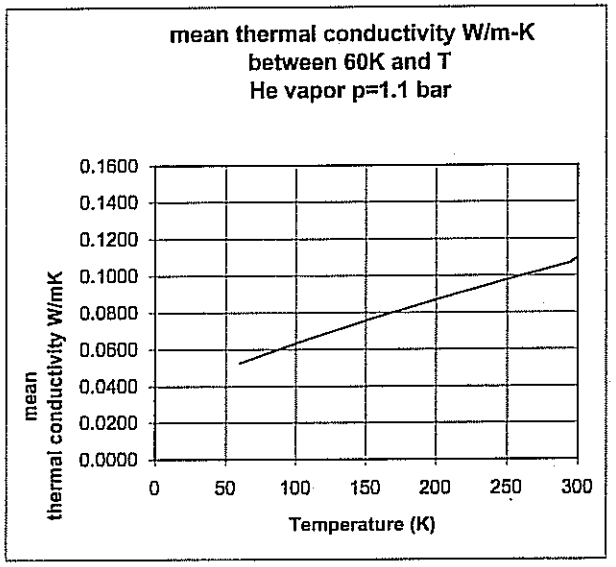

Proprietary

0.24 W

13 W

(vi) Gas Conduction from 60 K to 4.2 K = 0.~~103W~~

Thermal conduction in annular vapor space between stages 1 & 2 for PT415 Cryocooler

OD in.	3.8		
ID in	1		
area sq in	10.55575	area sq m	0.00681
L in	7.5	L m	0.1905
		k W/m-K	0.0526
dT	5	**Q W**	**0.103**

He at 1.1 bar -Mean thermal conductivity

dT	Temperature (K)	Therm. Cond. (W/m*K)		mean Therm. Cond. 5 to T (W/m*K)
5	5	0.010331	0.051655	0.0103
5	10	0.016925	0.084625	0.0136
5	15	0.021934	0.10967	0.0164
5	20	0.026216	0.13108	0.0189
5	25	0.030102	0.15051	0.0211
5	30	0.033729	0.168645	0.0232
5	35	0.037166	0.18583	0.0252
5	40	0.040455	0.202275	0.0271
5	45	0.043623	0.218115	0.0289
5	50	0.046687	0.233435	0.0307
5	55	0.049663	0.248315	0.0324
5	60	0.052562	0.26281	0.0341
5	65	0.055391	0.276955	0.0358
5	70	0.058158	0.29079	0.0402
	70	0.058158	0	

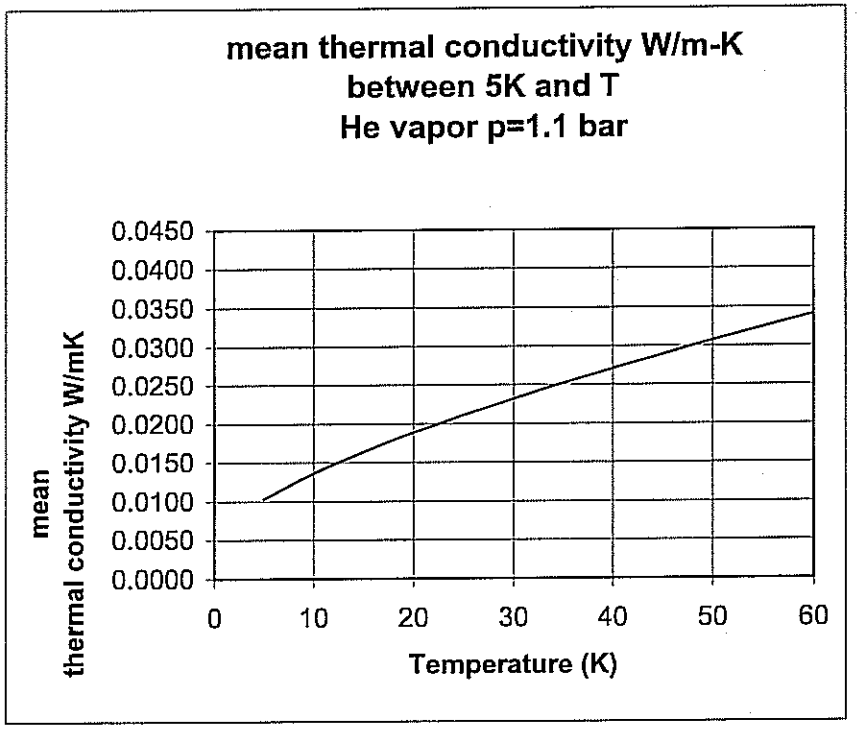

Proprietary

III-10 Estimation of Required Cryogens For Cooldown

(i.) Calculation of 80K and 4.2K Cold Mass Weight

A. Compute Cold Mass of 80K shield = 500 lb or 250 kg

B. Compute Cold Mass of 4.2K Vessel

1. Aluminum mass :
   Al Coil Bobbin= 883 lb
   Al He Shell = 428 lb
   Al Banding = 132 lb
   Reinforce Al Cylinder = 200 lb
   Total Al. Mass = 1,643 lb

2. Coil (Copper/ Superconductor) – 2,931 lb

Subtotal 4.2K System Weight = 4574 lb or 2079 kg

(ii.) Enthalpy Change of Cold Mass Material per LB

	ΔT (K)	
Material	300 - 80K	80 - 4.5K
Aluminum	69.24 BTU/LB	3.8953 BTU/LB
Copper (Superconductor Composite)	31.64 BTU/LB	2.756 BTU/LB

(iii.) Total Heat Removal From 300K to 80K

(1) Total for 80K System – AL, 69.24 BTU/LB x 550 LB = 38082 BTU

(2) Total for LHe System –

For LHe Vessel System – AL, 69.24 BTU/LB x 1643 LB = 113761 BTU

For Coil – 31.64 BTU/LB x 2931 = 92737 BTU

Therefore, total hear removal from 300K to 80K for LHe system is :

113761 BTU + 92737 BTU = 206498 BTU

Proprietary

(iv.) To cooldown He can from 300K to 80K, we need to transfer LN2.

Since 20648 BTU/ 365.7 BTU/LB = 565 liters LN2

(v.) Total Heat Removal from 80K to 4.2K for He Vessel

For He I (4.2K) System :
Al. (weight 7.12 LB) 3.8953 BTU/LB x 1643 LB = 6340 BTU

For S.C. Coils in He Vessel :
2.756 BTU/ LB x 2931 LB = 8078 BTU

Subtotal 14418 BTU

(vi.) Estimation of Required LHe for Cooldown from 80K to 4.2K

Again, assume exit gas at 80K, then one LB of liquid helium will remove 189.42 BTU from 80K to 4.2K, then, the required liquid helium is :

14418 BTU/ 189.42 BTU/LB = 76.1 LB, or 9.79 Ft^3 or 277 liters

Past experiences show that the exit gas temperature will be at an average temperature around 40K, one LB of liquid helium will remove 91.34 BTU, then, required helium will be

277 x 2.07 = 57.3 liters

To fill up the vessels of He, we need an additional 400 liters. Therefore, the required liquid helium per cooldown is estimated at 1000 liters.

Note: Density of liquid nitrogen is 50.46 LB/ Ft^3

Density of liquid helium is 7.798 LB/ Ft^3 and 1 Ft^3 = 28.317 liters

Proprietary

III-11 Design and Calculation of Cold Shippable Requirement for Cold Mass Suspension (See Fig. III-11-1)

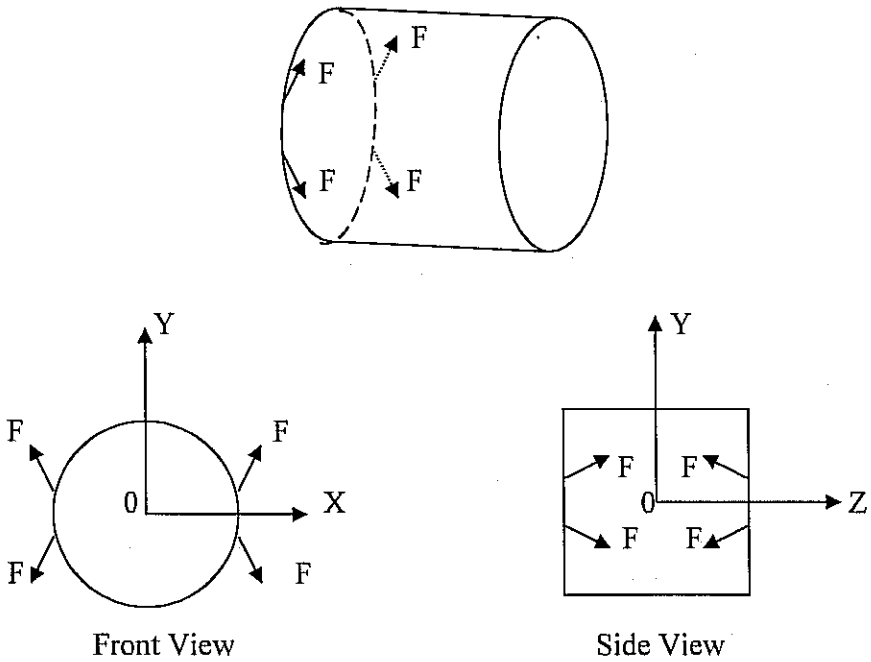

Figure III-11-1 Cold Mass Suspension

(A) Design load requirement

Design for Shipping Dynamic Load are: 1g up, 3g down and 2.5g transverse where g for 4.2K is estimated at 4574 lb and for 80K mass is estimated at 500 lb.

(B) Cold mass suspension
Engineering design drawing for cold mass support is shown in Appendix III-11-1

Cold attachment point coordination (in mm)
Xc = ±358 Yc = ±300 Zc = ±940

Warm attachment point coordination (in inches)
Xw = ±591 Yw = ±641 Zw = ±703

Proprietary

8 suspension links restrict cold mass movement in X, Y, Z and X rotate, Y rotate, Z rotate direction

The tilting angle α (between link and cold attachment point to center of contraction) to avoid stress or loosed or in links, due to the thermal contraction is illustration in the following figure

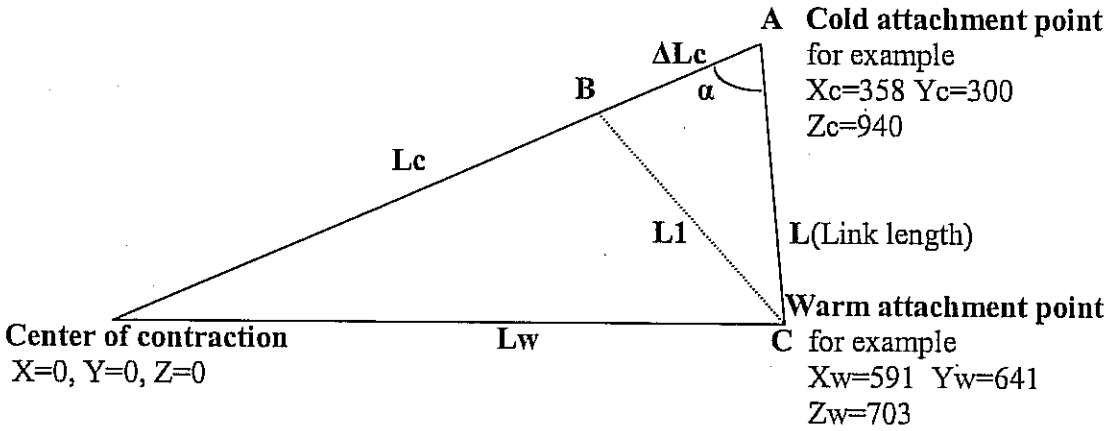

$Lc = \sqrt{358^2 + 300^2 + 940^2} = 1050$ mm

$Lw = \sqrt{591^2 + 641^2 + 703^2} = 1120$ mm

$L = \sqrt{(358-591)^2 + (300-641)^2 + (940-703)^2} = 475$ mm

Cold attachment point moves from A to B due to thermal contraction so a required tile angle α

$\Delta Lc = 4.32 \times 10^{-3} \times Lc = 4.54$ mm

Link contraction: $L_1 = L - L \times 1.08 \times 10^{-3} = 474.487$ mm

$\cos \alpha = (\Delta Lc^2 + L^2 - L1^2) / (2 \times \Delta Lc \times L) = 0.118$ $\alpha = 83.24°$

Actual angle of 88° is selected:

$\cos \alpha = (Lc^2 + L^2 - Lw^2) / (2 \times Lc \times L) = 0.074$ $\alpha = 85.8°$

This will assure that links will tighten up after it is cooldown.

Proprietary

III-12 Design of liquid helium recondensing system for MICE

III-12-1 INTRODUCTION: helium vapor from cryostat boiloff is condensed on surfaces cooled by a cryocooler; and condensed liquid flows back to the magnet. The flow is driven by gravity so the condenser is positioned above the maximum level of liquid in the cryostat .

Drwg MICE-CON-000 shows the design of recondenser assembly. Drwg MICE-CON-001 shows the OFHC recondensing unit. The vacuum tight enclosure is made of 316SS which are shown in Drwg MICE-CON-002 and MICE-CON-003.

Proprietary

III-12-2 Design Formula for condensing surface

Theory of Eckert is used for calculation of condenser area. Heat transfer across downward-flowing liquid film determines condensation rate. In most cases of interest, liquid film is laminar. $Nu_x = \left[\frac{g\rho(h_v - h_l)x^3}{4\mu k(T_v - T_s)}\right]^{\frac{1}{4}}$ and $N_{uave} = 4/3\ Nu_x$

$Nu_x = H_x x/k$

x = distance from top of condensing surface (m)
H_x = local heat transfer coefficient at x (W/m_2K)
k = thermal conductivity of liquid (W/mK)

$H_{ave} = \frac{4}{3} H_L$

H_{ave} = average heat transfer coefficient from x=0 to x=L (W/m_2K)
L = height of condensing surface (m)
g = acceleration of gravity (9.8 m/s_2)
ρ = density (kg/m_3)
h_v = enthalpy of vapor (J/kgK)
h_l = enthalpy of liquid (J/kgK)
μ = viscosity of liquid (Pa s)
T_v = vapor temperature (K)
T_s = surface temperature (K)

Pressure drop in tube for flow of liquid or vapor

$$\Delta P = \frac{\rho V^2}{2} f \frac{L}{D_h} \quad \text{(Pa)}$$

V = average fluid velocity (m/s)
f = friction factor
for laminar flow (Re < 2200) $f = 64/Re$
for turbulent flow (Re > 2200) $f = 0.316/(Re)^{0.25}$
Re = Reynolds number = $\rho V D_h/\mu$
L = tube length (m)
D_h = hydraulic diameter (m)
for a tube, D_h = inner tube diameter (m)
Difference in height between ends of tubes required to balance friction pressure drop $\Delta P_{total} = \Delta P_{liq} + \Delta P_{vap}$

liquid "head" = h (m) = $\Delta P_{tot} / (\rho_{liq} - \rho_{vap})g$ $\quad \frac{\Delta P_{tot}}{(\rho_{liq} - \rho_{vap})g}$

Proprietary

III-12-3 – Calculation Results

We assume the maximum case of three PT 415 cryocoolers installed and operating simultaneously. Piping is sized to accommodate the resulting helium flow. Each cryocooler has a He condenser bolted to the second stage flange.

Condenser design.

Material: OFHC copper
Helium: saturated vapor at 1.1 bar
Height of condenser fins = 2.0 inch
ΔT between vapor and plate temperature = 0.05 K
calculated heat transfer coefficient (average over the 2-inch long fin) is 1200 W/m^2 K
calculated required surface area: 40 sq. inch
construction:

10 slots are cut across a 2.18 inch diameter cylindrical section of copper. Each slot is 1/8 inch wide and 2 inches deep leaving a copper fin about 0.06 inch wide remaining between each slot. The resulting area exposed to He vapor is about 68 sq inches. In operation, the ΔT between vapor and fin temperature will automatically adjust to accommodate the actual head load.

The one-piece copper condenser has a flange that bolts directly to the cryocooler. A 2.5 inch OD stainless steel tube encloses the finned section and is brazed to the copper just below the flange. This tube forms a container, closed on the bottom by a stainless-steel plate.

¼-inch stainless steel tubes lead from the main He vapor vent line to the top of each condenser. Condensed liquid, (which is slightly subcooled below the saturation temperature of the vapor), drops from the tip of the fins into a space at the bottom and from this space flows into the ¼-inch liquid exit tube. ¼- inch liquid tubes lead from each condenser to the common liquid down-tube which carries liquid to the bottom of the magnet He volume. Liquid level in the down-tube is slightly higher (about 1.4 inches) than the level of the liquid He surface in the magnet.

Pressure drop:

If it is assumed the each ¼-inch line is at least 48 inches long, and the main down tube is at least 3/8-inch OD x 0.035 inch wall x 48 inch long, with three cryocoolers operating, the total pressure drop due to fluid friction is about 5.5 Pa requiring at total liquid "head" of only about 1.2 inches.

The tubes will probably be much shorter than 48 inches, so achieving the required "head" will be assured.

Proprietary

Example calculation of pressure drop:

For He at 4.3 K, h_{vap}= 20.7 kJ/kg, h_{liq} =0 .388 J/g,(h_{vap}- h_{liq}) = ~~30.31~~ 20.31 J/g

Mass flow rate = 1.5 W/~~30.31~~ 20.31 J/g = .0737 g/s = .0739 OK

For vapor tube:

V_{vap} = 0.25 m/s;

$\frac{\rho V^2}{2}$ = 0.563 Pa; ρ = 17.2 kg/m3, μ = 1.28x10^{-6} Pa*s; D = 0.18 inch = 0.00457 m

Re =ρVD/ μ = 16,100 (flow is turbulent); f = 0.028;

$\Delta P/L = \frac{\rho V^2}{2} f \frac{1}{D_h}$ = 3.45 Pa/m; for 48 inches = 1.22 m, dP = 4.2 Pa

Similarly, for liquid tube:

V_{liq}= 0.364 m/s;

$\frac{\rho V^2}{2}$ = 0.63 Pa; ρ = 123 kg/m3, μ = 3.12x10^{-6} Pa*s; D = 0.18 inch = 0.00457 m

Re =ρVD/ μ = 6570 (flow is turbulent); f = 0.035;

$\Delta P/L = \frac{\rho V^2}{2} f \frac{1}{D_h}$ = 0.63 Pa/m; for 48 inches = 1.22 m, dP = 0.77 Pa

Note that most of the pressure drop is in the vapor tube.

If we assume a 3/8x 0.035 wall down tube with flow from three condensers, with length = 48 inches, it's pressure drop is less than 0.5 Pa

Total pressure loss tubes is about 5.5 Pa

Equivalent liquid helium "head" is h = ΔP / ρ g where g = 9.8 m/s

h = 4.54 mm ~~≠~~ 1.15 inches = 0.17"

Proprietary

Proprietary

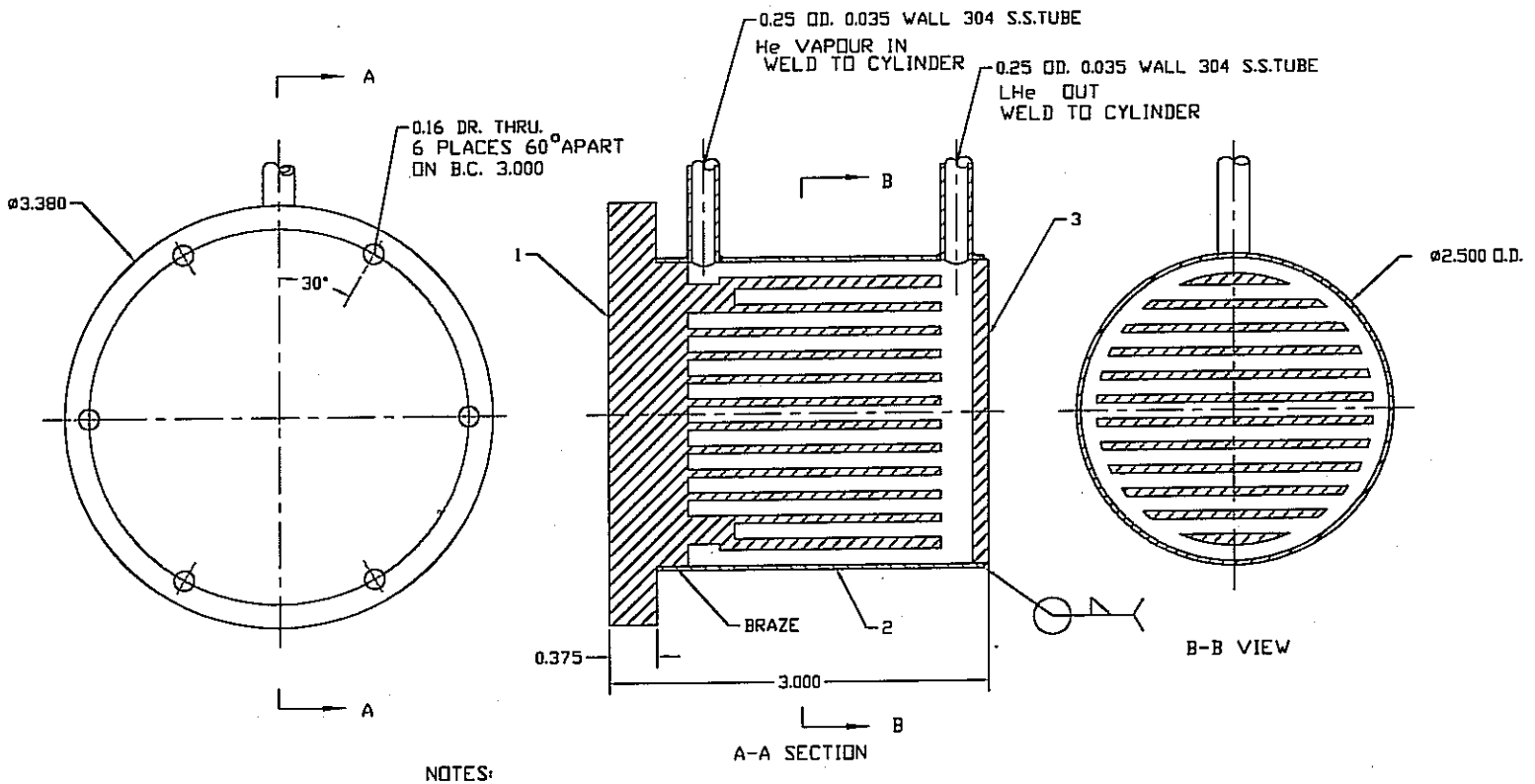

NOTES:
1) DIMENSIONS ARE IN INCHES
2) QTY. REQD. 3 SETS

QTY.	ITEM	DWG. No.	DESCRIPTION	NOTE
1	3	MICE-CON-003	VACUUM DISC	304 S.S.
1	2	MICE-CON-002	VACUUM CYLINDER	304 S.S.
1	1	MICE-CON-001	CONDENCING FINS.	OFHC

UNLESS OTHERWISE SPECIFIED TOLERANCES
.XXX ± .005
.XX ± .02

WANG NMR, INC.
2738 North Canyons Parkway, Livermore, CA 94550

LHe CONDENCE
HEAT EXCHANGE

D MICE-CON-000

DO NOT SCALE

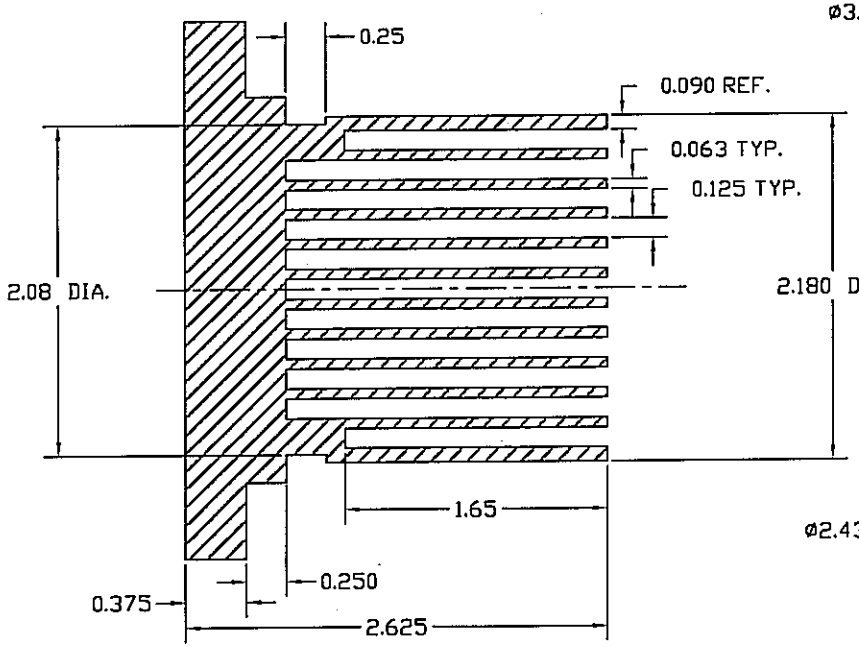

A-A SECTION

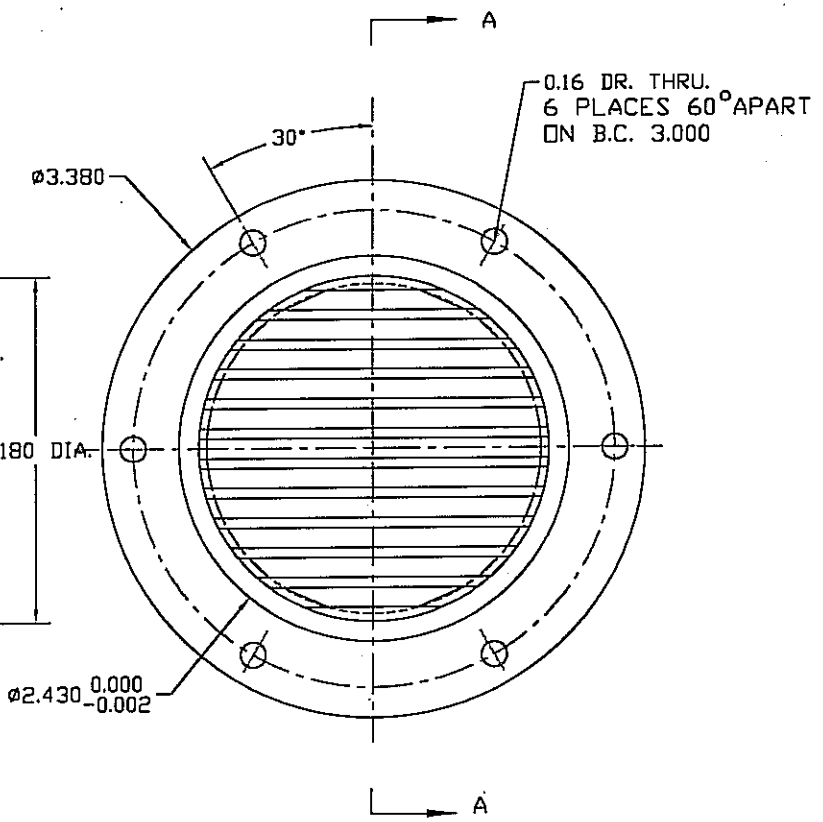

NOTES:
1) DIMENSIONS ARE IN INCHES
2) MATERIAL IS 3.50 O.D. OFHC ROD
3) QTY. 1

WANG NMR, INC.
HEAT EXCHANGE FINS.
D
MICE-CON-001

Proprietary

REVISIONS				
ZONE	REV	DESCRIPTION	DATE	APPROVED

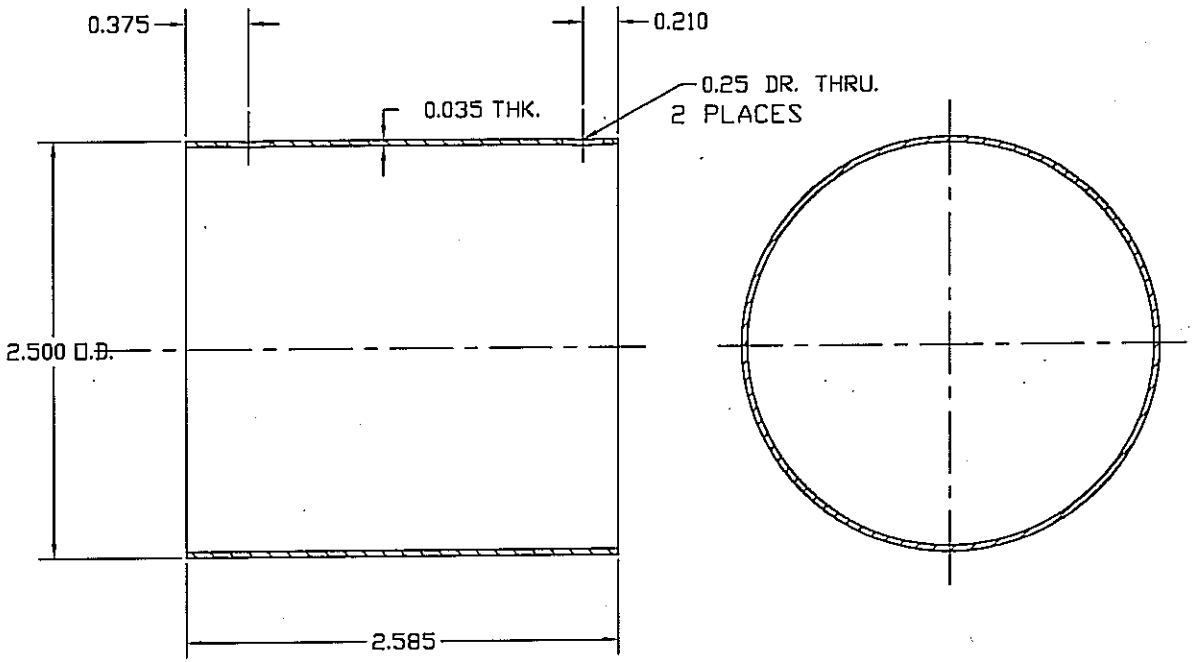

NOTES:
1) DIMENSIONS ARE IN INCHES
2) MATERIAL IS 2.5 O.D. 0.035 WALL 304 S.S. TUBE
3) QTY. 1

UNLESS OTHERWISE SPECIFIED TOLERANCES:
.XXX ± .005
.XX ± .02

TREATMENT
FINISH
ACT. WT. CALC. WT.

CONTRACT NO.
DRAWN DATE
CHECK
DESIGN
DESIGN ACTIVITY
CUSTOMER

WANG NMR, INC.
550 North canyons Parkway, Livermore, CA 94550

TITLE
VACUUM CYLINDER

SIZE C
DWG NO MICE-CON-002
SCALE DO NOT SCALE
RELEASE DATE
SHEET

Proprietary

Proprietary

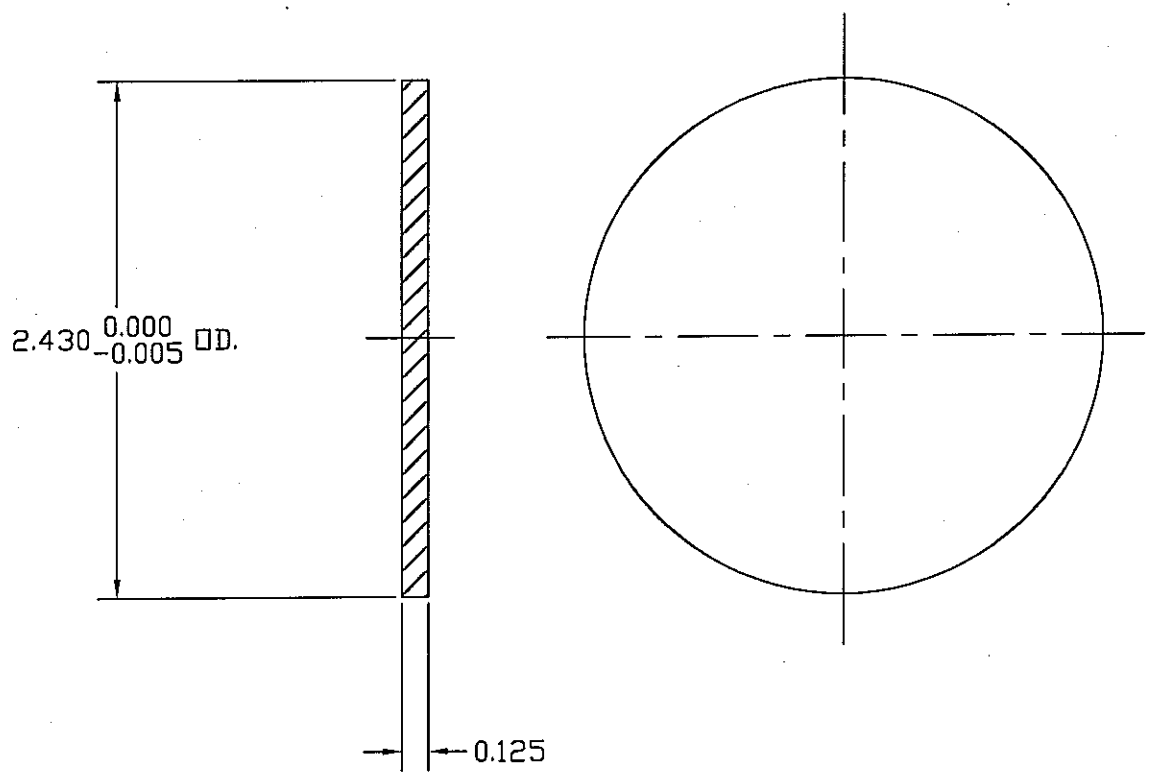

NOTES:
1) DIMENSIONS ARE IN INCHES
2) MATERIAL IS 1/8 THK. 304 S.S. PLATE
3) QTY. 1

UNLESS OTHERWISE SPECIFIED TOLERANCES:
.XXX ± .005
.XX ± .02

WANG NMR, INC.
550 North canyons Parkway, Livermore, CA 94550

VACUUM DISC

C

MICE-CON-003

DO NOT SCALE

III-13 Instrumentation Design and Feed through for each Tracker

The following Table, III-13A, lists the sensors, location, and wiring from the magnet through the helium vent. Two feed through connector are used.
Connector J1 is 27 contact, Fischer P/N DEE 105A1
Connector J2 is 11 contact, Fischer P/N DEE104A056

TABLE III-13A

SENSOR TYPE	SENSOR DESIGNATION	LOCATION	NO. OF WIRES	FEED-THROUGH J01-
Temperature PT 100	TRP01	Bottom of pre-cool line	4	1,2,3,4
Temperature CERNOX	TRX 01	Match Coil #1	4	5,6,7,8
	TRX 02	End Coil #2	4	9,10,11,12
Helium level 600 mm	LHE 01	Lower level	7	13,14,15,16,17, 18,19
	LHE 02	Upper Level		
				FEED-THROUGH J02-
Voltage Tap	VTM 01	End Coil #2, Start	9	1
	VTM 02	End Coil #2 & Center Coil		2
	VTM 09	Center Coil Tap		9
	VTM 03	Center Coil & Coil #1		3
	VTM 04	End Coil #1, Finish		4
	VTM 05	Match Coil #2, Start		5
	VTM 06	Match Coil #2, Finish		6
	VTM 07	Match Coil #1, Start		7
	VTM 08	Match Coil #1, Finish		8

Proprietary

The following table, III-13B, lists the sensors, location, and wiring from the magnet through the vacuum wall. Two feed through connector are used.
Connector J3 is 11 contact, Fischer P/N DEE104A056
Connector J4 is 40 contact, Fischer P/N DEE 107A52

TABLE III-13B

SENSOR TYPE	SENSOR DESIGNATION	LOCATION	NO. OF WIRES	FEED-THROUGH J02-
Voltage Tap	VTL 01	Bottom of HTS Lead (F)	8	1
	VTL 02	Bottom of HTS Lead (H)		2
	VTL 03	Bottom of HTS Lead (G)		3
	VTL 04	Bottom of HTS Lead (E)		4
	VTL 05	Bottom of HTS Lead (D)		5
	VTL 06	Bottom of HTS Lead (C)		6
	VTL 07	Bottom of HTS Lead (B)		7
	VTL 08	Bottom of HTS Lead (A)		8
				FEED-THROUGH J03-
Temperature PT 100	TRP 02	64 K shield	4	1, 2, 3, 4,
Temperature PT 100	TRP 03	Cryocooler #1, Stage 2	4	5, 6, 7, 8,
	TRP 04	Cryocooler #2, Stage 2	4	9, 10, 11, 12
Temperature PT 100	TRP 05	HTC Lead #1, Warm End	4	13, 14, 15, 16,
	TRP 06	HTC Lead #2, Warm End	4	17, 18, 19, 20
Temperature CERNOX	TRX 03	Cryocooler #1, Stage 1	4	21, 22, 23, 24
	TRX 04	Cryocooler #2, Stage 1	4	25, 26, 27, 28
Temperature CERNOX	TRP 05	HTC Lead #1, Cold End	4	29, 30, 31, 32
	TRP 06	HTC Lead #2, Cold End	4	33, 34, 35, 36

Proprietary

III-14 Design of sleeve and Installation of cryocooler

Drwg MICE-0001 shows the cryocooler installation with sleeve. The first stage is indirectly cooled through OFHC cone contact. This might create imperfection in heat transfer. In additional two sleeves tubes will contribute at least 7.0W heat load to first stage and 0.422W to the second stage.

Proprietary

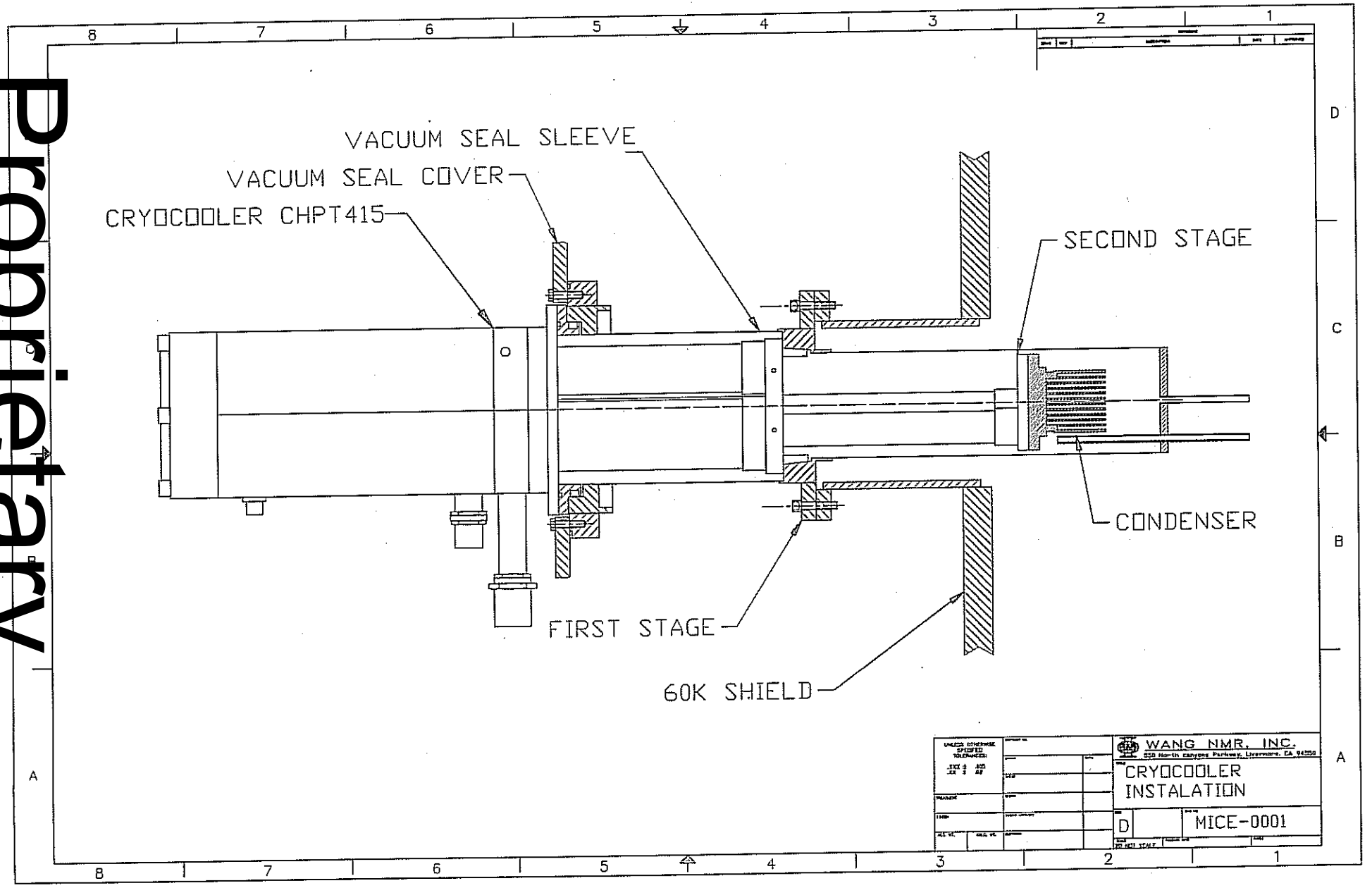

Proprietary

Proprietary

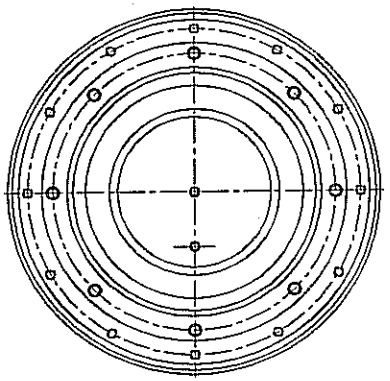

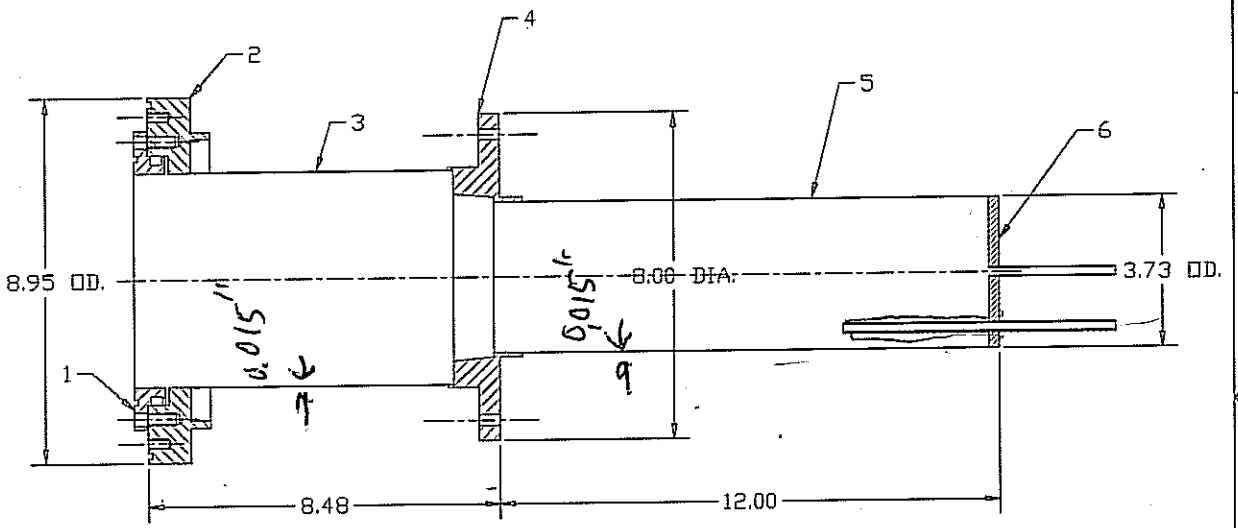

NOTES:
1) DIMENSIONS ARE IN INCHES

QTY.	ITEM	DWG. No.	DESCRIPTION	NOTE
1	6	MICE-C007		
1	5	MICE-C006		
1	4	MICE-C005		
1	3	MICE-C004		
1	2	MICE-C003		
1	1	MICE-C002		

UNLESS OTHERWISE SPECIFIED TOLERANCES:
.XXX ± .005
.XX ± .02

WANG NMR, INC.
550 Martin canyons Parkway, Livermore, CA 94550

D | MICE-C001

DO NOT SCALE

Proprietary

REVISIONS				
ZONE	REV	DESCRIPTION	DATE	APPROVED

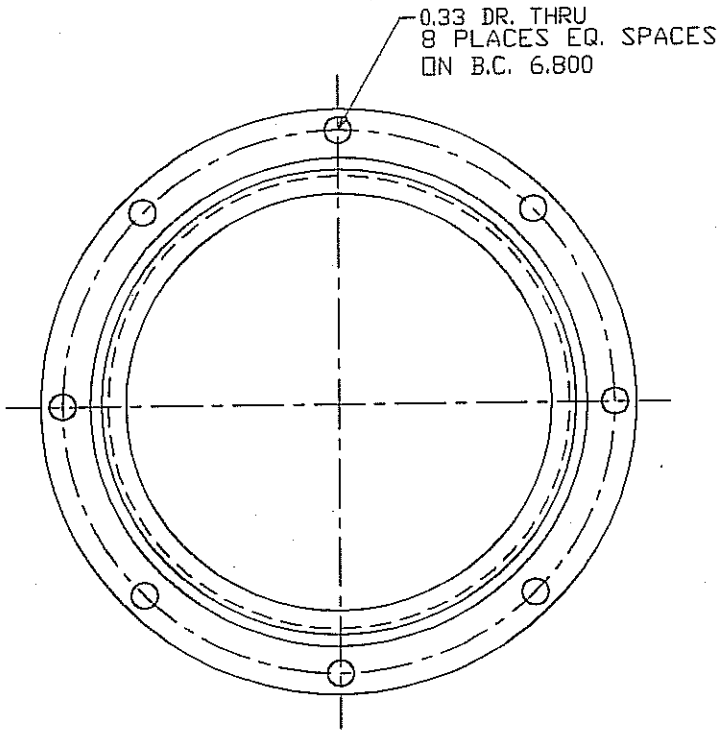

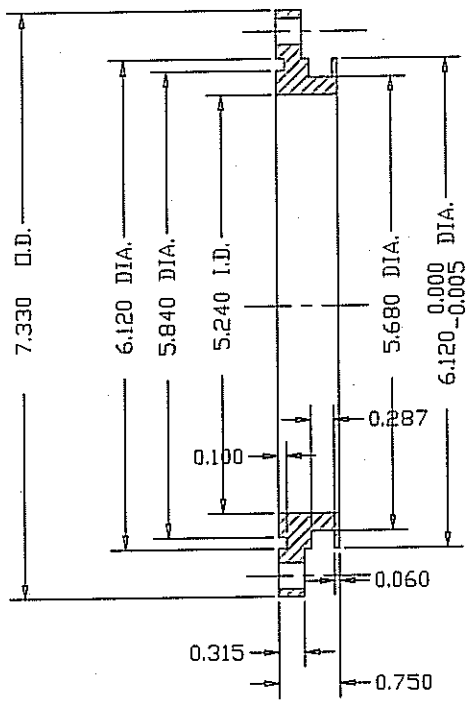

NOTES:
1) DIMENSIONS ARE IN INCHES
2) MATERIAL IS 304 S.S.
3) QTY. 1

UNLESS OTHERWISE SPECIFIED TOLERANCES:
.XXX ± .005
.XX ± .02

TREATMENT
FINISH
ACT. WT. CALC. WT.

CONTRACT NO
DRAWN DATE
CHECK
DESIGN
DESIGN ACTIVITY
CUSTOMER

WANG NMR, INC.
550 North canyons Parkway, Livermore, CA 94550

TITLE

SIZE C
DWG NO MICE-C002
SCALE DO NOT SCALE
RELEASE DATE
SHEET

Proprietary

REVISIONS				
ZONE	REV	DESCRIPTION	DATE	APPROVED

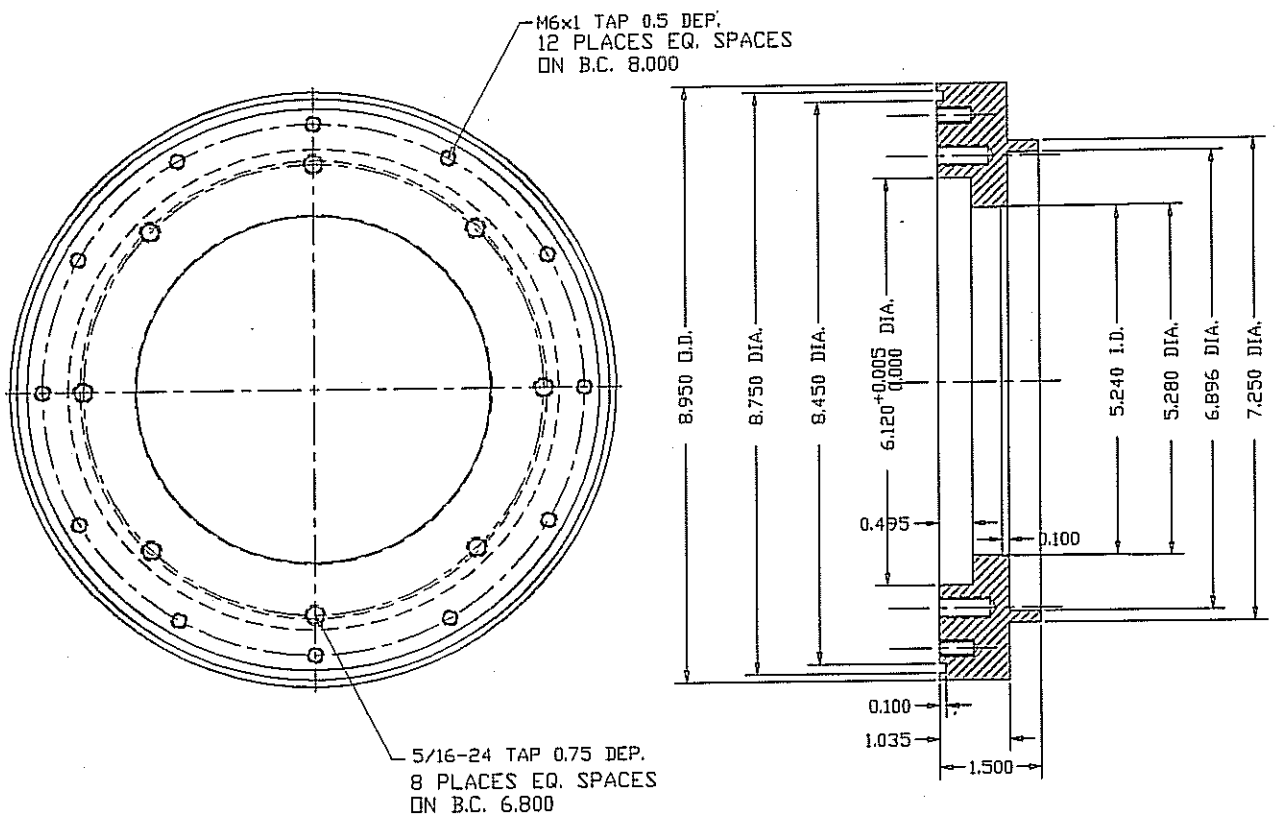

NOTES:
1) DIMENSIONS ARE IN INCHES
2) MATERIAL IS 304 S.S.
3) QTY. 1

UNLESS OTHERWISE SPECIFIED TOLERANCES:
.XXX ± .005
.XX ± .02

TREATMENT
FINISH
ACT. WT.
CALC. WT.

WANG NMR, INC.
550 North canyons Parkway, Livermore, CA 94550

TITLE

SIZE C
DWG NO. MICE-C003
SCALE DO NOT SCALE
RELEASE DATE
SHEET

Proprietary

REVISIONS				
ZONE	REV	DESCRIPTION	DATE	APPROVED

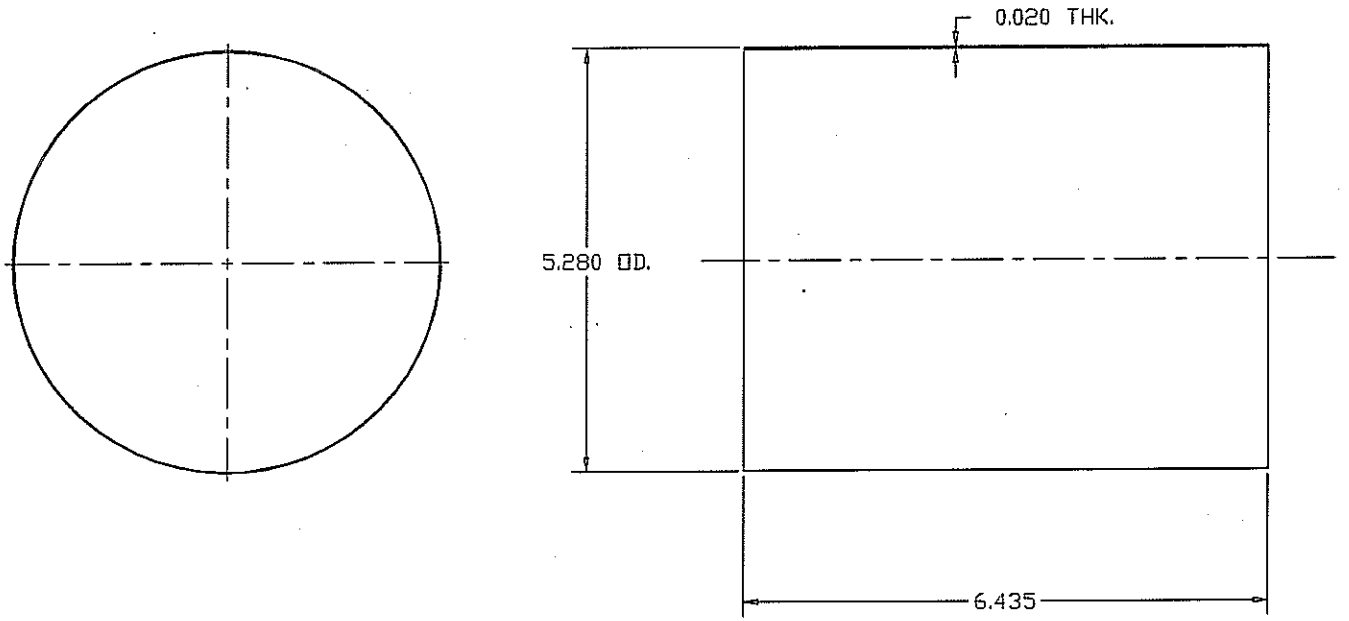

NOTES:
1) DIMENSIONS ARE IN INCHES
2) MATERIAL IS 304 S.S.
3) QTY. 1

UNLESS OTHERWISE SPECIFIED TOLERANCES:
.XXX ± .005
.XX ± .02

TREATMENT
FINISH
ACT. WT.
CALC. WT.

CONTRACT NO.
DRAWN
DATE
CHECK
DESIGN
DESIGN ACTIVITY
CUSTOMER

WANG NMR, INC.
550 North canyons Parkway, Livermore, CA 94550

TITLE

SIZE C
DWG NO. MICE-C004
SCALE DO NOT SCALE
RELEASE DATE
SHEET

Proprietary

REVISIONS				
ZONE	REV	DESCRIPTION	DATE	APPROVED

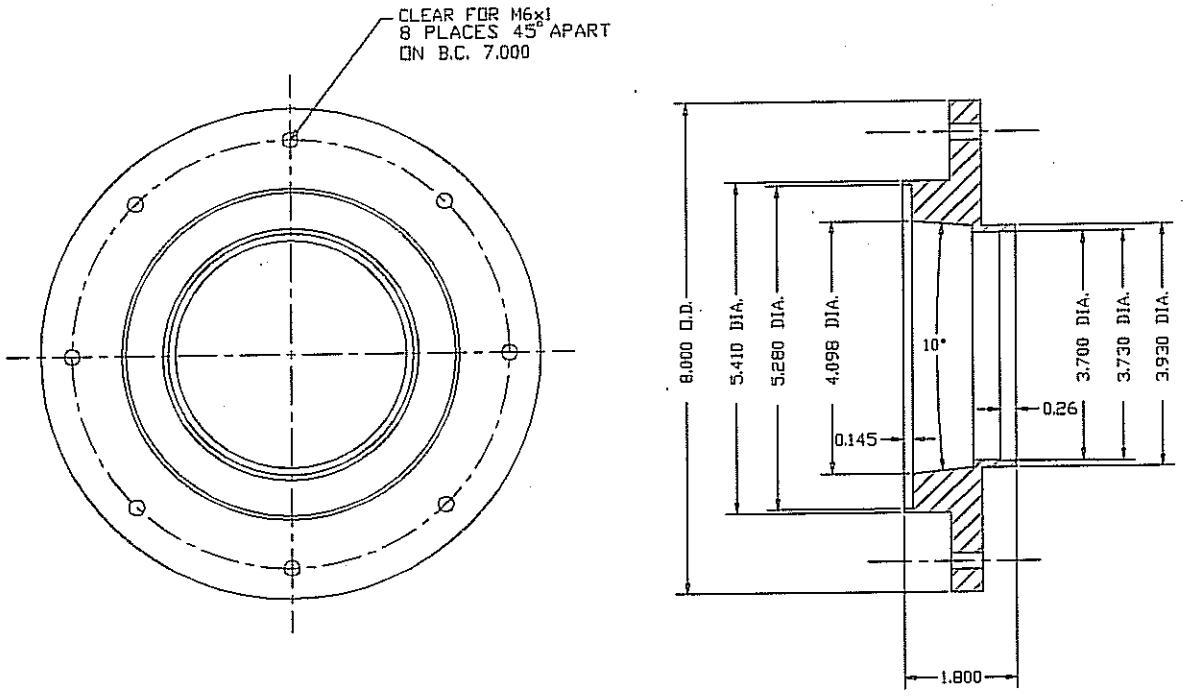

NOTES:
1) DIMENSIONS ARE IN INCHES
2) MATERIAL IS OFHC
3) QTY. 1

UNLESS OTHERWISE SPECIFIED TOLERANCES:
.XXX ± .005
.XX ± .02

TREATMENT
FINISH
ACT. WT. CALC. WT.

CONTRACT NO.
DRAWN DATE
CHECK
DESIGN
DESIGN ACTIVITY
CUSTOMER

WANG NMR, INC.
550 North canyons Parkway, Livermore, CA 94550

TITLE

SIZE C
DWG NO. MICE-C005
SCALE DO NOT SCALE!
RELEASE DATE
SHEET

Proprietary

REVISIONS				
ZONE	REV	DESCRIPTION	DATE	APPROVED

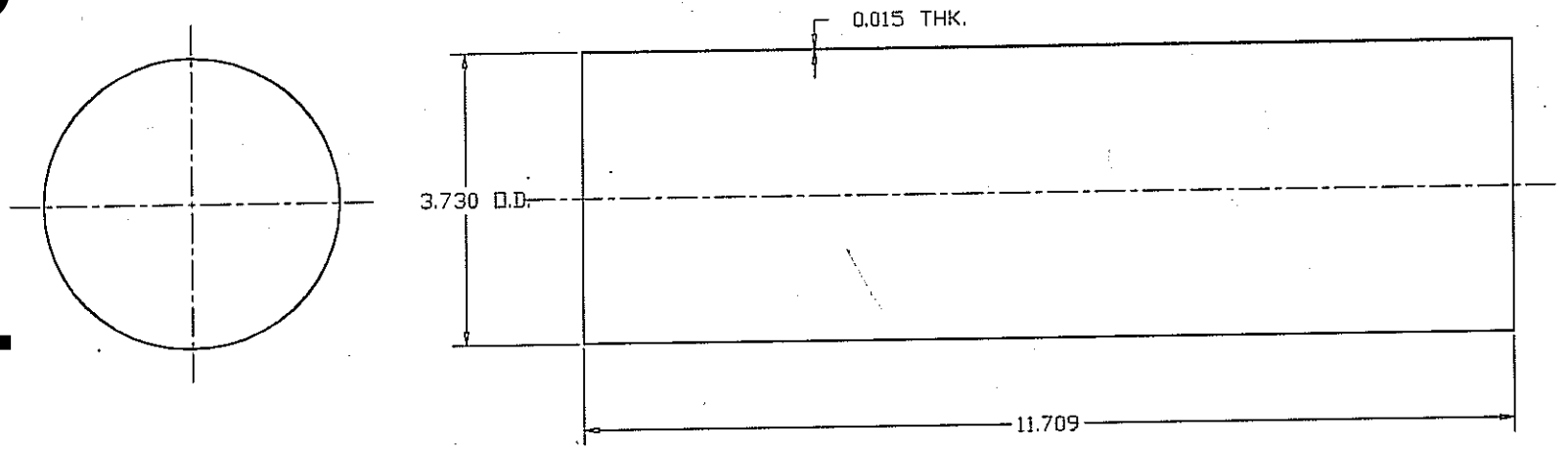

NOTES:
1) DIMENSIONS ARE IN INCHES
2) MATERIAL IS 304 S.S.
3) QTY. 1

UNLESS OTHERWISE SPECIFIED TOLERANCES:
.XXX ± .005
.XX ± .02

TREATMENT
FINISH
ACT. WT. | CALC. WT.

CONTRACT NO.
DRAWN | DATE
CHECK
DESIGN
DESIGN ACTIVITY
CUSTOMER

WANG NMR, INC.
550 North canyons Parkway, Livermore, CA 94550

TITLE

SIZE C | DWG NO. MICE-C006

SCALE DO NOT SCALE | RELEASE DATE | SHEET

Proprietary

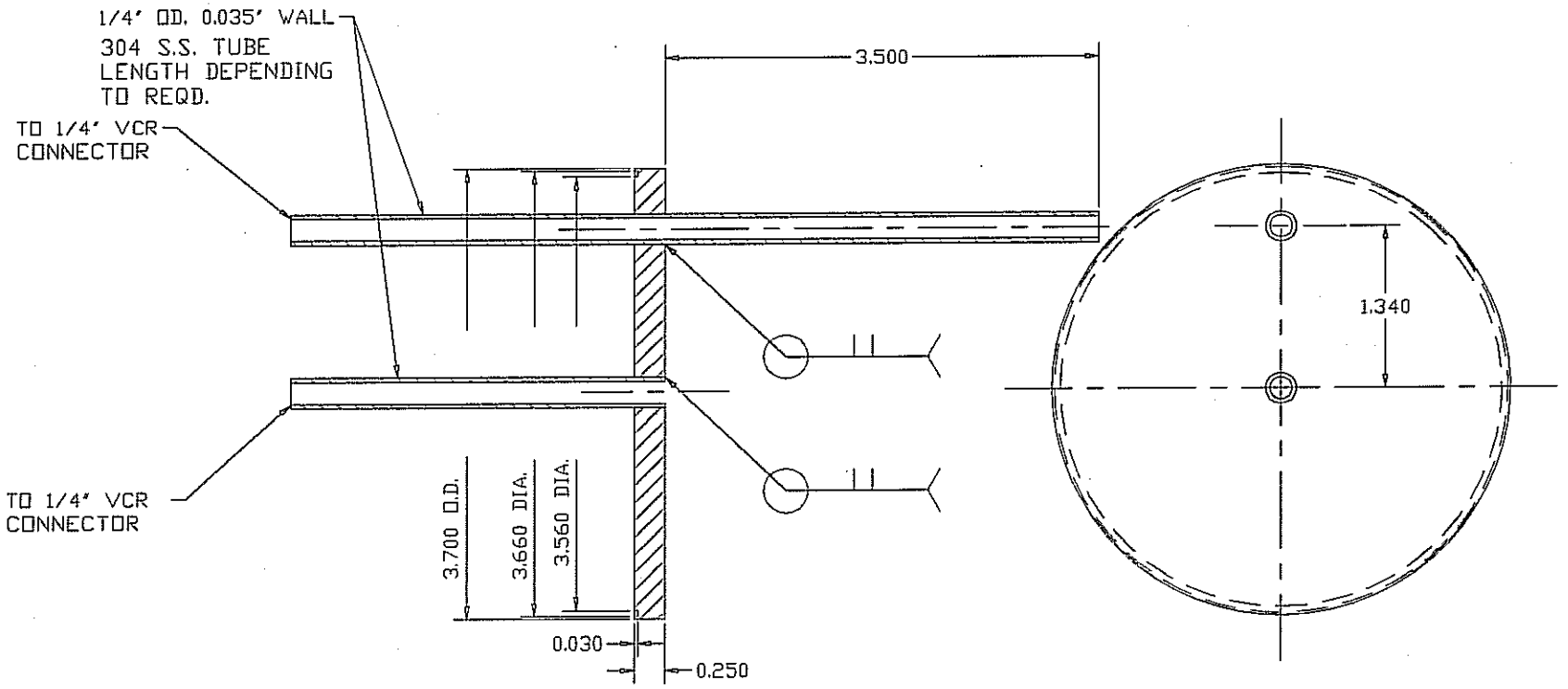

NOTES:
1) DIMENSIONS ARE IN INCHES
2) MATERIAL IS 304 S.S.
3) QTY. 1

WANG NMR, INC.
530 North Canyons Parkway, Livermore, CA 94550

D | MICE-C007

DO NOT SCALE

APPENDIX III-1-1

ASME Code Calculation

For MICE Cryostat

Wang NMR, Inc.

550 North Canyons Parkway , Livermore, Ca. 94551

Proprietary

SUMMARY ON ASME CODE ANALYSIS OF MICE SOLENOID CRYOSTAT DESIGN

ASME code for shell stress and end disc.(end plate) are employed to verify the ASME stress and thickness requirement and then compare with design thickness.

Design internal working stress for He Vessel is 45 psi. Design stress for vacuum vessel is 15 psi.

4.2 K shell thickness and stress were examined for He shell, bobbin tube and He neck tube. 300 K shell thickness and stress were examined for outer shell and inner bore tube. In each case, we found our design satisfy ASME code. All designs are very conservative.

Stresses on 4.2 K cylinder plate of bobbin and on 300 K vacuum end plate were also examined. They also satisfy ASME code with very conservative margin.

Fault conditions such as quench pressure (45 psi) and vacuum break (15 psi above atmosphere pressure or 30 psi absolute) as well as required normal operations such as leak check were also examined. Again, they satisfy ASME code with good safety margin.

Proprietary

SHELL STRESS ANALYSIS

ASME Code Verfication Calculation

For MICE TRACKER MAGNET SYSTEM, LBL

(Bobbin, He Vessel and Vacuum Vessel)

Date: July 7, 2006

I. Design Dimension:(inch)	ID	OD	THICK	LENGTH
Bobbin (Al 6061-T6)	19.291	20.236	0.473	100.160
He Shell (Al 6061-T6)	27.500	28.500	0.500	100.160
End Closure (Al 6061-T6)	19.291	28.500	0.800	100.160
Inner Vessel (304 Stain Steel)	15.787	16.023	0.125	107.680
Outer Vessel (304 Stain Steel)	54.094	55.275	0.625	107.677
End Flange (304 Stain Steel)	16.023	51.732	0.750	107.677

II. Under External Pressure	(Leak Ck) Outer Vessel	(Quench) Bobbin	(Leak Ck) He Shell	(Vac. Break) Inner Vessel
Material	S. S.-304	Al- 6061T	Al- 6061T	S. S.-304
Shell Thickness (in) *(thk)* dwg	.75 ~~0.625~~	0.473	0.500	0.125
Length (in) *(lgh)*	107.677	100.160	100.160	107.680
Outside Diameter (in) *(OD)*	55.275	20.236	28.500	16.023
D/t *(D =OD / thk)*	88.440	42.782	57.000	128.184
L/D *(L = lgh / OD)*	1.948	4.950	3.514	6.720
Factor A (UGO-28.0)** *(UGO)*	0.00200	0.00340	0.00250	~~0.00030~~ .00011
Factor B (UHA-28.1) *(UHA)*	12000.00	5400.00	5000.00	4300.00 .00013
Max. allowable P (psi) * *MAP*	180.46	167.87	116.67	44.62
* *MAP = 1.33 * UHA/ D*				
Actual Working P (psi) *AWP*	15.00	45.00	15.00	15.00
Circumf. Stress (psi) *Cstress= AWP*OD/4/thk*	331.65	481.30	213.75	480.69
Longitud. Stress (psi) *Lstress= AWP*OD/2/thk*	663.30	962.60	427.50	961.38

HA

UGC

$P = \frac{2AE}{3(\frac{R}{t})}$

III. Under Internal Pressure	(Vac. Break) Outer Vessel	(Leak Ck) Bobbin	(Quench) He Shell	(Leak Ck) Inner Vessel
Design Pres. (psi) *DPres*	15.00	15.00	45.00	15.00
Inside Radius (in) *IR*	27.047	9.65	13.75	7.89
Stress Limit (psi) *SLtd*	17500.00	10000.00	10000.00	17500.00
Joint Efficiency *JE*	0.70	0.70	0.70	0.70
Thickness Req. (in) *ThkR=DPres*IR/(SLtd*JE-0.6*	0.033	0.021	0.089	0.010
Actural Design Thick(in) *ADThk*	0.625	0.473	0.500	0.125
Circumf. Stress (psi) *Cstress=Dpres*2*IR/4/ADT*	324.56	152.94	618.75	473.64
Longitud. Stress (psi) *Lstress=Dpres*2*IR/2/ADTh*	649.13	305.88	1237.50	947.28

**FACTOR A IS INDEPENDENT OF MATERIAL

Note: Stress Limit=Yield Strength/S.F.=35000/2=17500psi

Ref.: Pressure Vessel Handbook, Eugene F. Megyesy, 1977

Proprietary

SHELL STRESS ANALYSIS
ASME Code Verfication Calculation- He Neck tube
For MICE TRACKER MAGNET SYSTEM

Date: July 7, 2006

I. Design Dimension:(inch)	ID	OD	THICK	LENGTH
He Neck Tube (304 S S)	0.930	1.000	0.035	20.300

II. Under External Pressure	Neck Tube	5 tube		
Material	S. S.-304	"		
Shell Thickness (in) *(thk)*	~~0.035~~	.010		
Length (in) *(lgh)*	20.300			
Outside Diameter (in) *(OD)*	1.000	1.5		
D/t *(D =OD / thk)*	28.571			
L/D *(L = lgh / OD)*	20.300			
Factor A (UGO-28.0)** *(UGO)*	0.00025			
Factor B (UHA-28.1) *(UHA)*	3500.00			
Max. allowable P (psi) * *MAP*	162.93			
**MAP = 1.33 * UHA/ D*				
Actual Working P (psi) *AWP*	15.00			
Circumf. Stress (psi) *Cstress= AWP*OD/4/thk*	107.14			
Longitud. Stress (psi) *Lstress= AWP*OD/2/thk*	214.29			

III. Under Internal Pressure	(Quench) He Neck Tube			
Design Pres. (psi) *DPres*	45.00			
Inside Radius (in) *IR*	0.930			
Stress Limit (psi) *SLtd*	17500.00			
Joint Efficiency *JE*	0.70			
Thickness Req. (in) *ThkR=DPres*IR/(SLtd*JE-0.6**	0.003			
Actural Design Thick(in) *ADThk*	0.035			
Circumf. Stress (psi) *Cstress=Dpres*2*IR/4/ADT*	597.86			
Longitud. Stress (psi) *Lstress=Dpres*2*IR/2/ADTh*	1195.71			

**FACTOR A IS INDEPENDENT OF MATERIAL

Note: Stress Limit=Yield Strength/S.F.=35000/2=17500psi
Ref.: Pressure Vessel Handbook, Eugene F. Megyesy, 1977

Proprietary

Cylinder Side Plate
Stress Analysis - ALUMINUM
For MICE TRACKER MAGNET SYSTEM

Date: July 7, 2006

(6061-T6 ALUMINUM FOR BOBBIN)

		End Plate of Aluminum Bobbin
Pressure Load (psi)	*(PL)*	45.00
--this is the design limit		
Outer Radius (in)		13.75
Offset (in)		0.00
Outer Radius+offset (in)	*(ORO)*	13.750
--outer radius is enlarged due to offset.		
Disk Inner Radius (in	*(DIR)*	10.118
Thichness (in)	*(t)*	0.800
--this is the thickness should be in design.		
E (AL, 6061T6) (ps	*E(al)*	1.00E+07
Use Table on P341, Roark to determine coefficients :		
Ri/Ro	*(DIR / ORO)*	0.74
Poisson Ratio	(v)	0.30
Ky,max (p341 Roark)	*(Kymax)*	-0.0004
Km,rb (case 2h.)	*(Kmrb)*	-0.0410
Kq,b	*(kqb)*	0.4240
D=Et^3/12(1-v^2)	*D = E(al)t^3 *(1 -v^2)/ 12*	388266.67

For the thickness in design, under the pressure indicated, the disk is having :

Deflection,max (in)	*(Kymax *PL* ORO^4/ D)*	-0.0017
Moment (in-# per inc	*(M = Kmrb *PL*ORO^2)*	-348.82
Shear (psi)	*(kqb *PL*ORO)*	262
Max. Stress by Mt. (ps	*Max Str= (6 * M / t^2)*	-3270

Compare the max. stress due to bending to the max. allowable stress of that material:

18000 psi for S.St.
10000 psi for AL6061-T6

The thickness in the design is adequate.

MICEsideAL

Proprietary

Cylinder Side Plate- Vacuum Vessel
Stress Analysis - Stainless Steel
For MICE TRACKER MAGNET SYSTEM

Date: Ju

304 Stainless Steel		**End Plate of Vacuum Vessel**
Pressure Load (psi)	*(PL)*	15.00
--this is the design limit		
Outer Radius (in)		25.87
Offset (in)		0.00
Outer Radius+offset (in)	*(ORO)*	25.866
--outer radius is enlarged due to offset.		
Disk Inner Radius (in	*(DIR)*	8.0115
Thichness (in)	*(t)*	0.750
--this is the thickness should be in design.		
E (S. St. 3xxx) (psi	*E(ss)*	2.80E+07
Use Table on P341, Roark to determine coefficients :		
Ri/Ro	*(DIR / ORO)*	0.31
Poisson Ratio	(v)	0.30
Ky,max (p341 Roark)	*(Kymax)*	-0.0006
Km,rb (case 2h.)	*(Kmrb)*	-0.0570
Kq,b	*(kqb)*	0.5414
D=Et^3/12(1-v^2)	*D = E(ss)t^3 *(1 -v^2) / 12*	895781.25

For the thickness in design, under the pressure indicated, the disk is having :

Deflection,max (in)	*(Kymax *PL* ORO^4/ D)*	-0.0045
Moment (in-# per inc	*(M = Kmrb *PL*ORO^2)*	-572.04
Shear (psi)	*(kqb *PL*ORO)*	210
Max. Stress by Mt. (ps	*Max Str= (6 * M / t^2)*	-6102

Compare the max. stress due to bending to the max. allowable stress of that material:

18000 psi for S.St.
10000 psi for AL6061-T6

The thickness in the design is adequate.

Proprietary

SHELL STRESS ANALYSIS
ASME Code Verfication Calculation- He Neck tube
For MICE TRACKER MAGNET SYSTEM

Date: July 7, 2006

I. Design Dimension:(inch)	ID	OD	THICK	LENGTH
He Neck Tube (304 S S)(vent)	0.980	1.000	0.010	20.300
Cooler Neck Tube (4.2 K)	3.800	3.830	0.015	12.000
Cooler Neck Tube (77 K)	5.200	5.240	0.020	8.800

II. Under External Pressure	Neck Tube	Cooler Neck Tube (4.2 K)	Cooler Neck Tube (77 K)	
Material	S. S.-304L	S. S.-304L	S. S.-304 L	
Shell Thickness (in) *(thk)*	0.010	0.010	0.010	
Length (in) *(lgh)*	20.300	12.000	8.800	
Outside Diameter (in) *(OD)*	1.000	3.830	5.240	
D/t *(D =OD / thk)*	100.000	383.000	524.000	
L/D *(L = lgh / OD)*	20.300	3.133	1.679	
Factor A (UGO-28.0)** *(UGO)*	0.00025	0.00025	0.00025	
Factor B (UHA-28.1) *(UHA)*	3500.00	3500.00	3500.00	
Max. allowable P (psi) * *MAP*	46.55	12.15	8.88	
**MAP = 1.33 * UHA/ D*				
Actual Working P (psi) *AWP*	15.00	15.00	15.00	
Circumf. Stress (psi) *Cstress= AWP*OD/4/thk*	375.00	1436.25	1965.00	
Longitud. Stress (psi) *Lstress= AWP*OD/2/thk*	750.00	2872.50	3930.00	

III. Under Internal Pressure	(Quench) He Neck Tube	Cooler Neck Tube (4.2 K)	Cooler Neck Tube (77 K)	
Design Pres. (psi) *DPres*	45.00	45.00	45.00	
Inside Radius (in) *IR*	0.980	3.800	5.200	
Stress Limit (psi) *SLtd*	17500.00	17500.00	17500.00	
Joint Efficiency *JE*	0.70	0.70	0.70	
Thickness Req. (in) *ThkR=DPres*IR/(SLtd*JE-0.6*	0.004	0.014	0.019	
Actural Design Thick(in) *ADThk*	0.010	0.015	0.020	
Circumf. Stress (psi) *Cstress=Dpres*2*IR/4/ADT*	2205.00	5700.00	5850.00	
Longitud. Stress (psi) *Lstress=Dpres*2*IR/2/ADTh*	4410.00	11400.00	11700.00	

**FACTOR A IS INDEPENDENT OF MATERIAL

Note: Stress Limit=Yield Strength/S.F.=35000/2=17500psi
Ref.: Pressure Vessel Handbook, Eugene F. Megyesy, 1977

MICECRYOneckR

Proprietary

Appendix III-2-1

Engineering Design Drawing For

60 K Thermal Shield

Wang NMR Inc.

• 550 North Canyons Parkway • Livermore, CA 94551

Proprietary

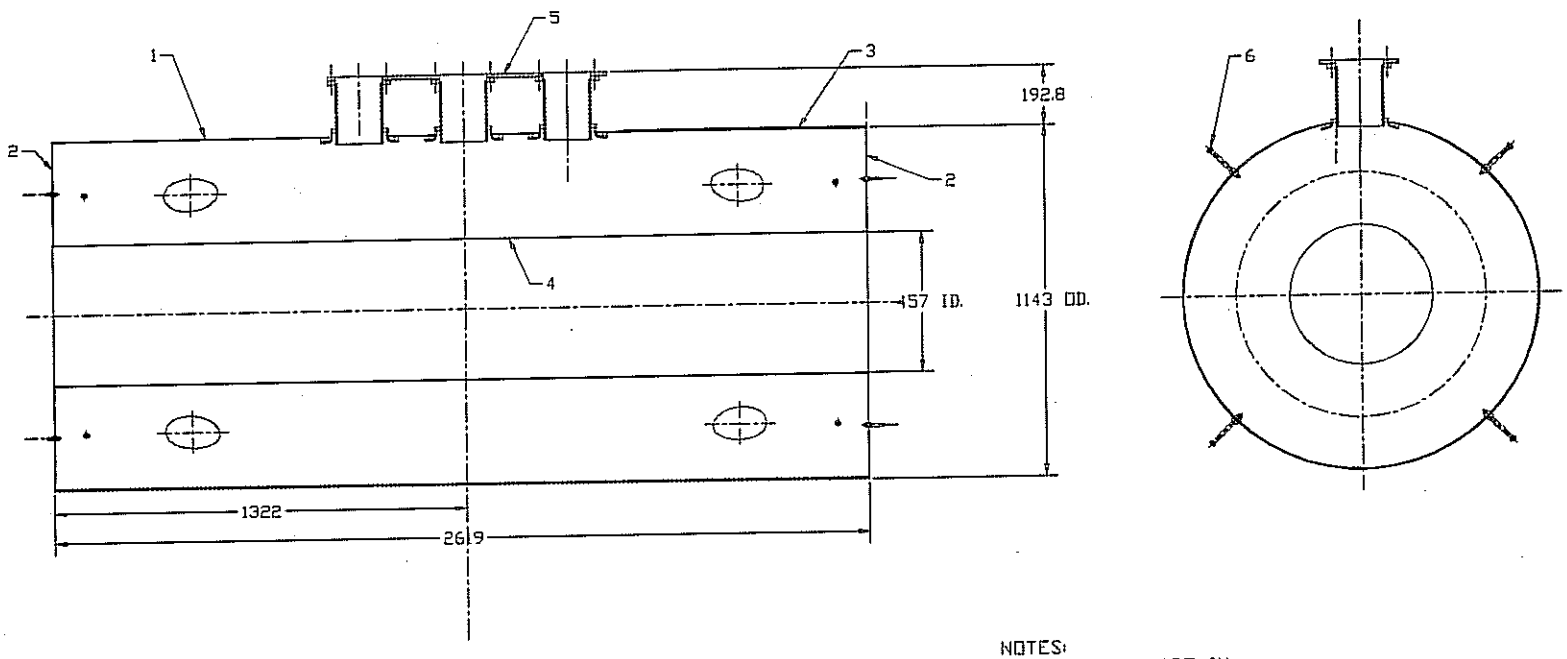

NOTES:
1) DIMENSIONS ARE IN mm

QTY.	ITEM	DWG. No.	DESCRIPTION	NOTE
16	6	MICE-6600	THERMAL BUMPER	G-10
1	5	MICE-6500	CRYOCOOLER FIRST STAGE MOUTING PORT	6061 T6
1	4	MICE-6400	INNER CYLINDER	6061 T6
1	3	MICE-6300	REMOVABLE COVER	6061 T6
2	2	MICE-6200	END PLATE	6061 T6
1	1	MICE-6100	OUTER CYLINDER	6061 T6

UNLESS OTHERWISE SPECIFIED TOLERANCES:

WANG NMR, INC.
550 North canyons Parkway, Livermore, CA 94550

60K SHIELD

D MICE-6000

DO NOT SCALE

Proprietary

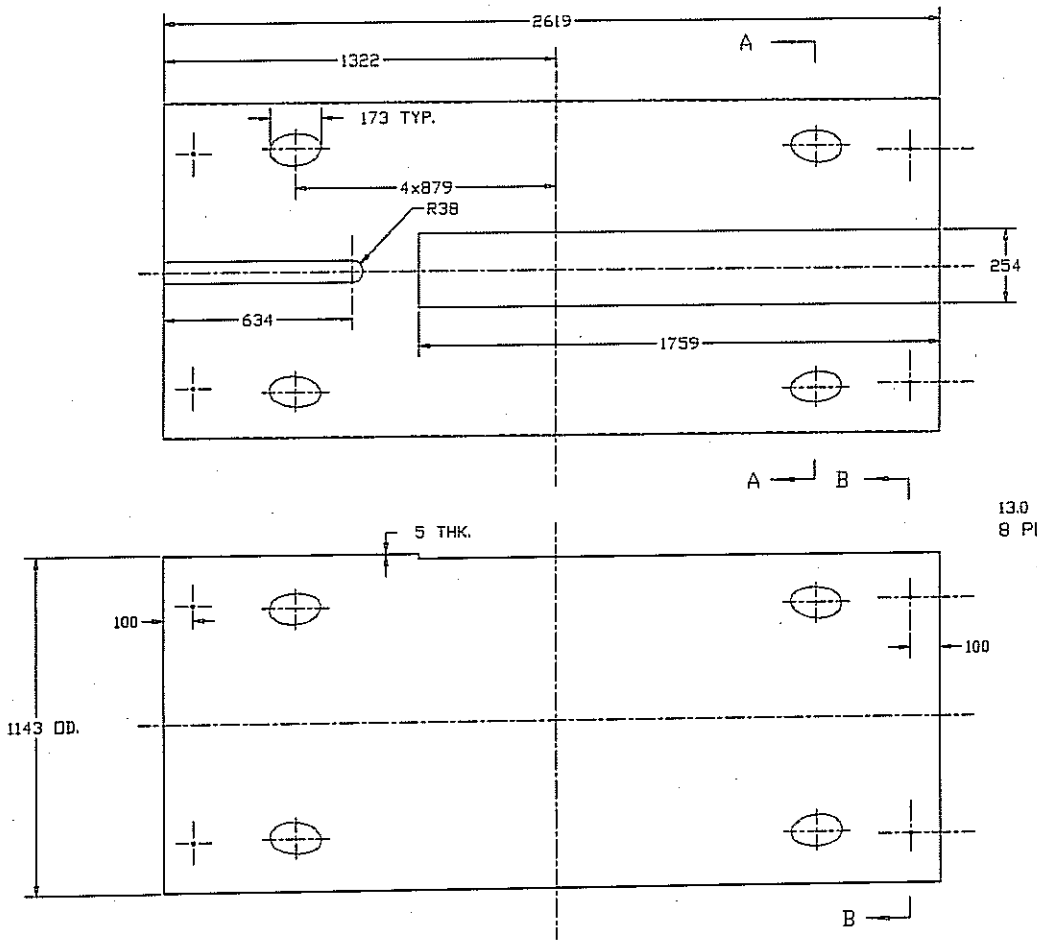

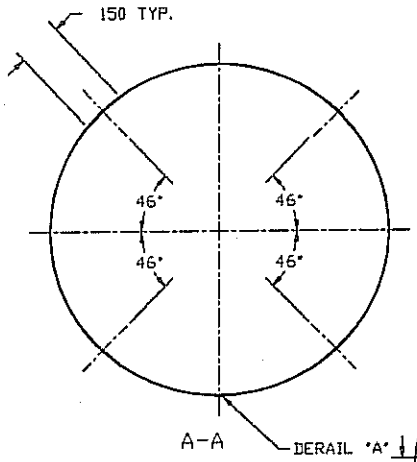

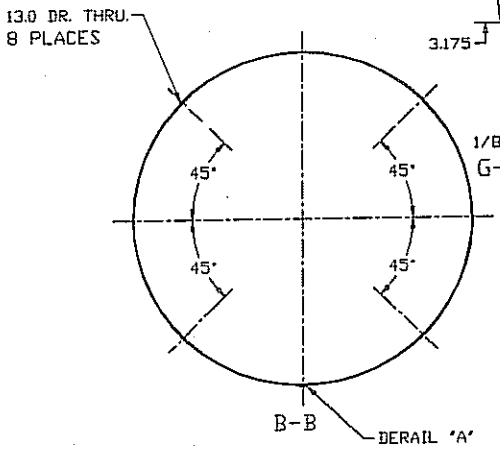

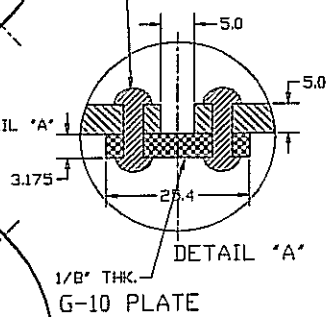

NOTES:
1) DIMENSIONS ARE IN mm
2) MATERIAL IS 3/16" THK. 6061T6 AL. SHEET
3) WORK: CUTTING MATERIAL,. ROLLING, RIVETING, WELDING BI-METAL & CUTTING HOLES
4) QTY. 1

UNLESS OTHERWISE SPECIFIED TOLERANCES

WANG NMR, INC.
350 North canyons Parkway, Livermore, CA 94550

OUTER CYLINDER

D | MICE-6100

DO NOT SCALE

Proprietary

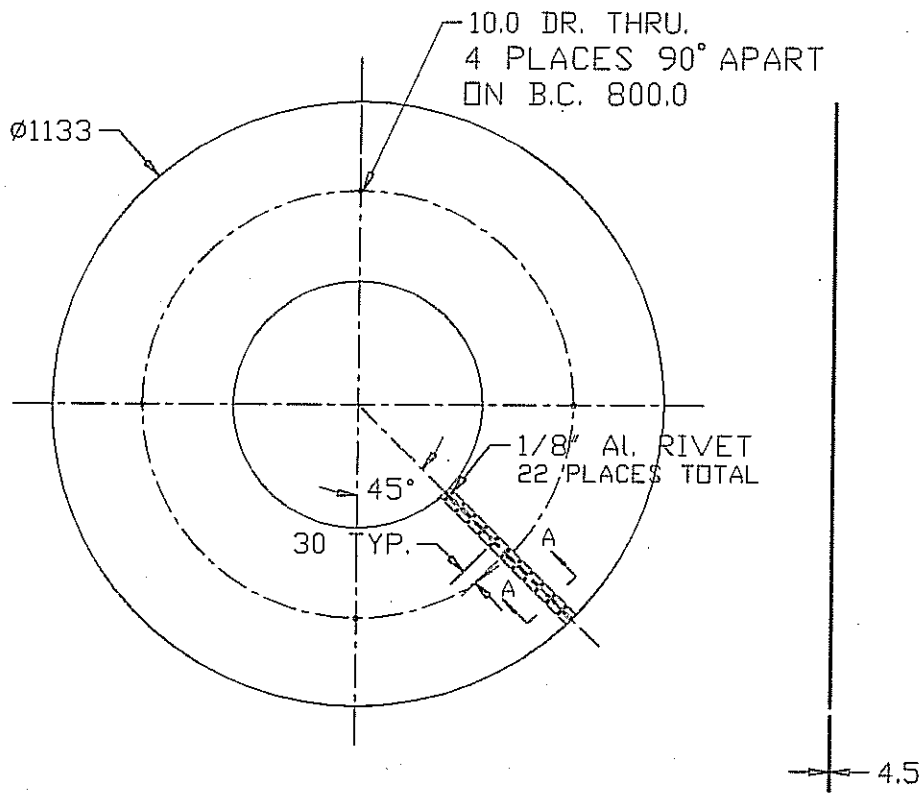

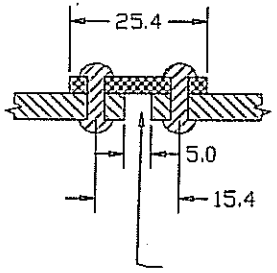

GAP ALIGN OUTER &
INNER CYLINDER

A-A SECTION

NOTES:
1) DIMENSIONS ARE IN mm
2) MATERIAL IS 3/16" THK. 6061T6 Al. PLATE
3) QTY. 2

REVISIONS				
ZONE	REV	DESCRIPTION	DATE	APPROVED

UNLESS OTHERWISE SPECIFIED TOLERANCES:
.XXX ± .005
.XX ± .02

TREATMENT
FINISH
ACT. WT. CALC. WT.

WANG NMR, INC.
550 North canyons Parkway, Livermore, CA 94550

TITLE: END PLATE

SIZE: C
PART NO: MICE-6200
SCALE: DO NOT SCALE

Proprietary

Proprietary

REVISIONS				
ZONE	REV	DESCRIPTION	DATE	APPROVED

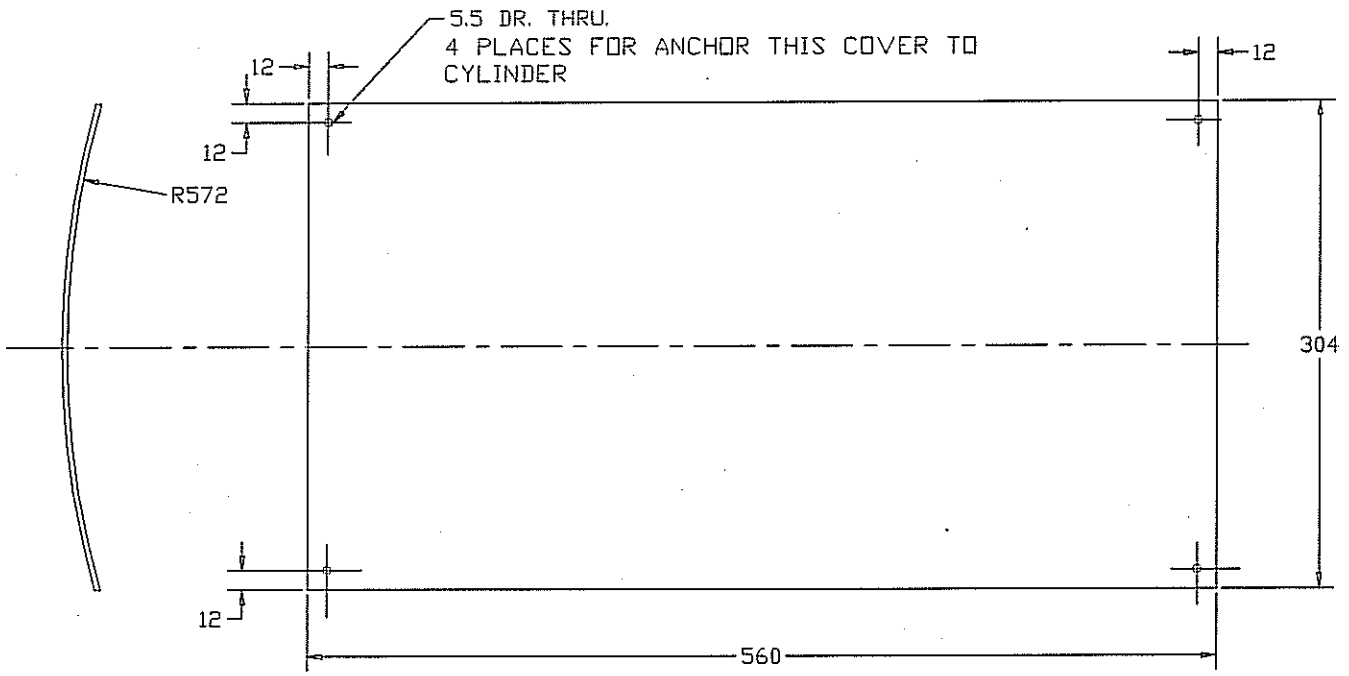

NOTES:
1) DIMENSIONS ARE IN mm
2) MATERIAL IS 3/16' THK. 6061T6 Al. PLATE
3) QTY.1

UNLESS OTHERWISE SPECIFIED TOLERANCES:
.XXX ± .005
.XX ± .02

TREATMENT

FINISH

ACT. WT. | CALC. WT.

CONTRACT NO.
DRAWN | DATE
CHECK
DESIGN
DESIGN ACTIVITY
CUSTOMER

WANG NMR, INC.
550 North canyons Parkway, Livermore, CA 94550

TITLE
REMOVABLE COVER

SIZE C
DWG NO MICE-6300
SCALE DO NOT SCALE
RELEASE DATE
SHEET

Proprietary

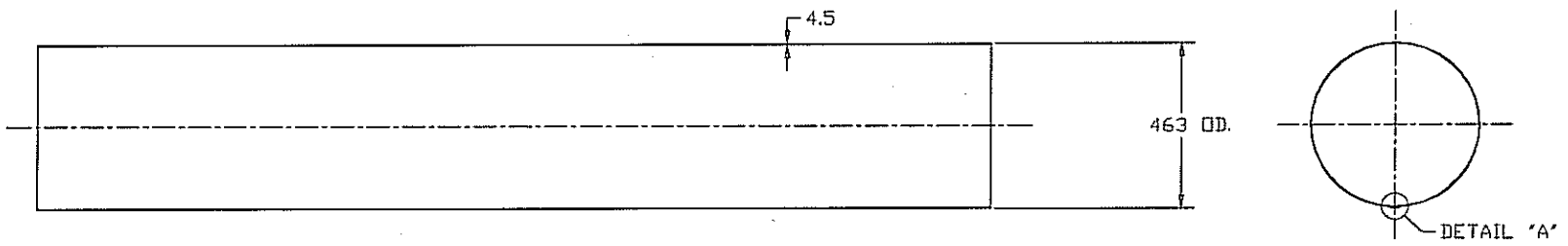

NOTES:
1) DIMENSIONS ARE IN mm
2) MATERIAL IS 3/16" THK. 6061T6 Al. SHEET
3) WORK: CUTTING MATERIAL ,ROLLING & RIVETING
4) QTY. 1

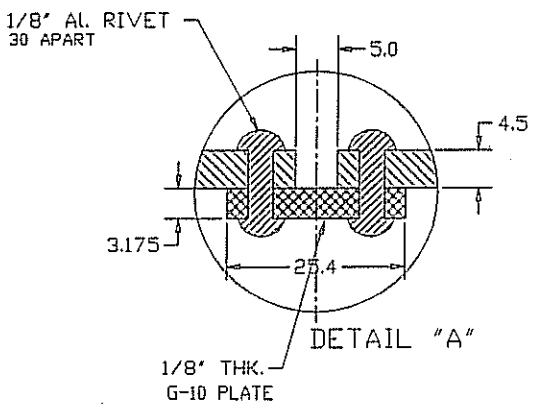

WANG NMR, INC.	
CENTER CYLINDER	
D	MICE-6400

Proprietary

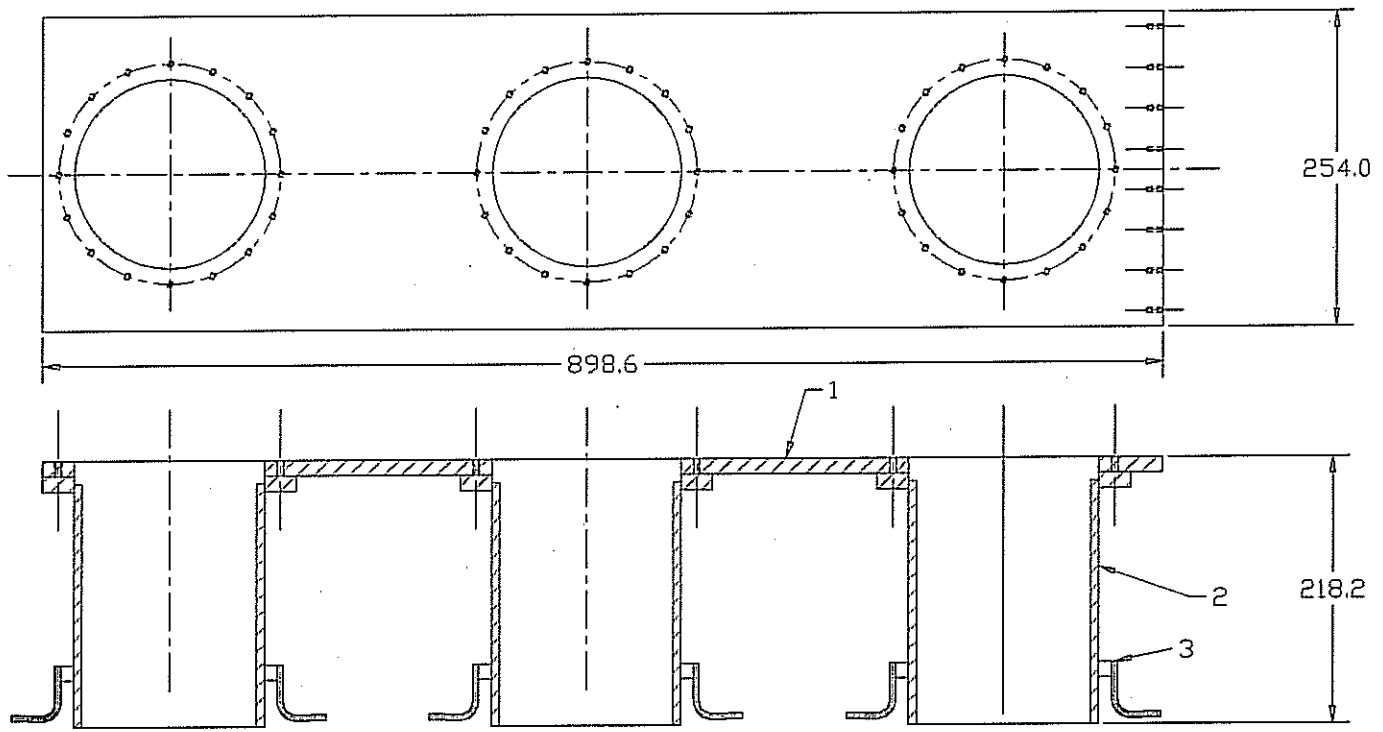

NOTES:
1) DIMENSIONS ARE IN mm

QTY.	ITEM	DWG. No.	DESCRIPTION	NOTE
12	3	MICE-6530	BI-METAL PART	Cu-Al
3	2	MICE-6520	EXTEND CYLINDER	6061T6
1	1	MICE-6510	MOUTING PLATE	OFHC

WANG NMR, INC.
330 North Canyons Parkway, Livermore, CA 94550

CRYOCOOLER FIRST STAGE MOUNTING PORT

D MICE-6500

DO NOT SCALE

Proprietary

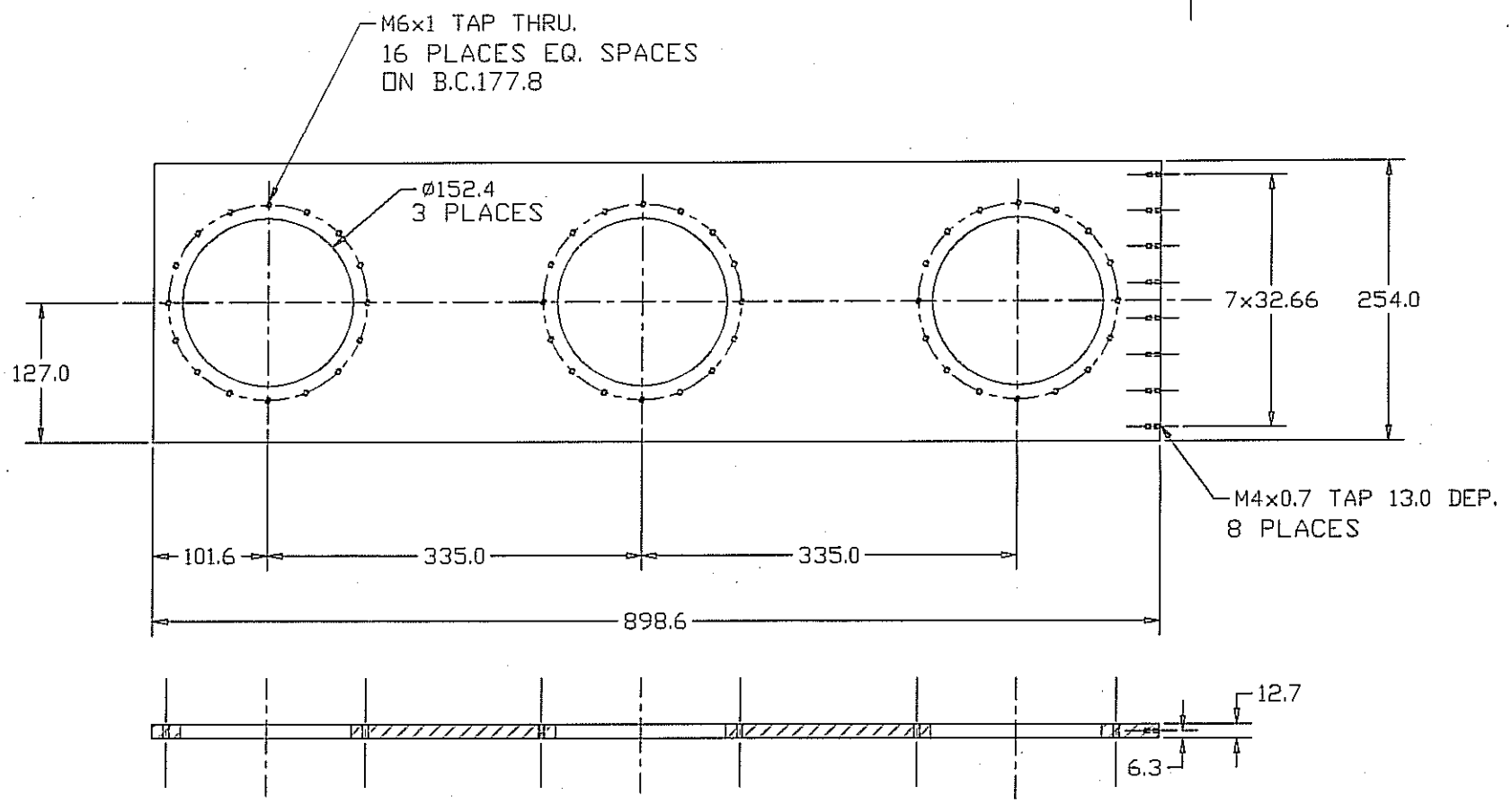

NOTES:
1) DIMENSIONS ARE IN mm
2) MATERIAL IS 1/2" THK. OFHC PLATE
3) QTY. 1

WANG NMR, INC.
550 North canyons Parkway, Livermore, CA 94550

MOUTING PLATE

D | MICE-6510

DO NOT SCALE

Proprietary

ZONE	REV	DESCRIPTION	DATE	APPROVED

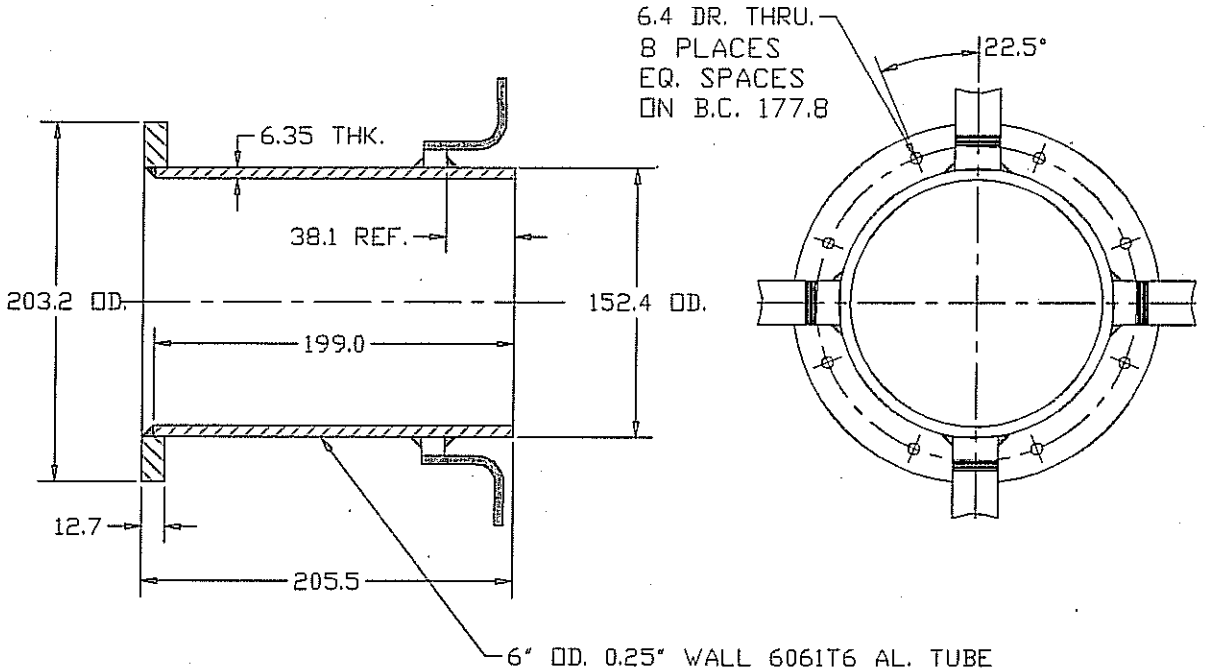

NOTES:
1) DIMENSIONS ARE IN mm
2) MATERIAL IS 6061T6 ALUMINUM
3) QTY. 3

UNLESS OTHERWISE SPECIFIED TOLERANCES:
.XXX ± .005
.XX ± .02

TREATMENT
FINISH
ACT. WT. CALC. WT.

CONTRACT NO.
DRAWN DATE
CHECK
DESIGN
DESIGN ACTIVITY
CUSTOMER

WANG NMR, INC.
550 North canyons Parkway, Livermore, CA 94550

TITLE
EXTEND CYLINDER

SIZE C
DWG NO. MICE-6520
SCALE DO NOT SCALE
RELEASE DATE
SHEET

Proprietary

REVISIONS				
ZONE	REV	DESCRIPTION	DATE	APPROVED

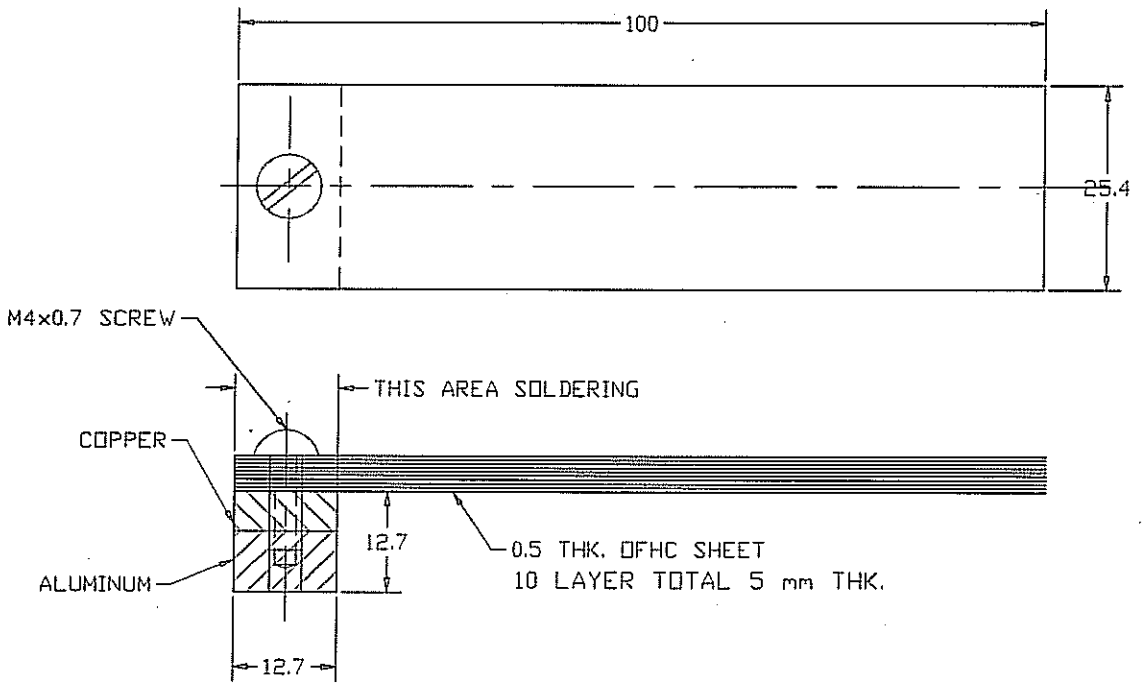

NOTES
1) DIMENSIONS ARE IN mm
2) MATERIAL IS Cu-Al BI-METAL
3) QTY. 12

UNLESS OTHERWISE SPECIFIED TOLERANCES:
.XXX ± .005
.XX ± .02

TREATMENT
FINISH
ACT. WT. CALC. WT.

CONTRACT NO.
DRAWN DATE
CHECK
DESIGN
DESIGN ACTIVITY
CUSTOMER

WANG NMR, INC.
550 North canyons Parkway, Livermore, CA 94550

TITLE
BI-METAL PART

SIZE C
DWG NO. MICE-6530
SCALE DO NOT SCALE
RELEASE DATE
SHEET

Proprietary

REVISIONS				
ZONE	REV	DESCRIPTION	DATE	APPROVED

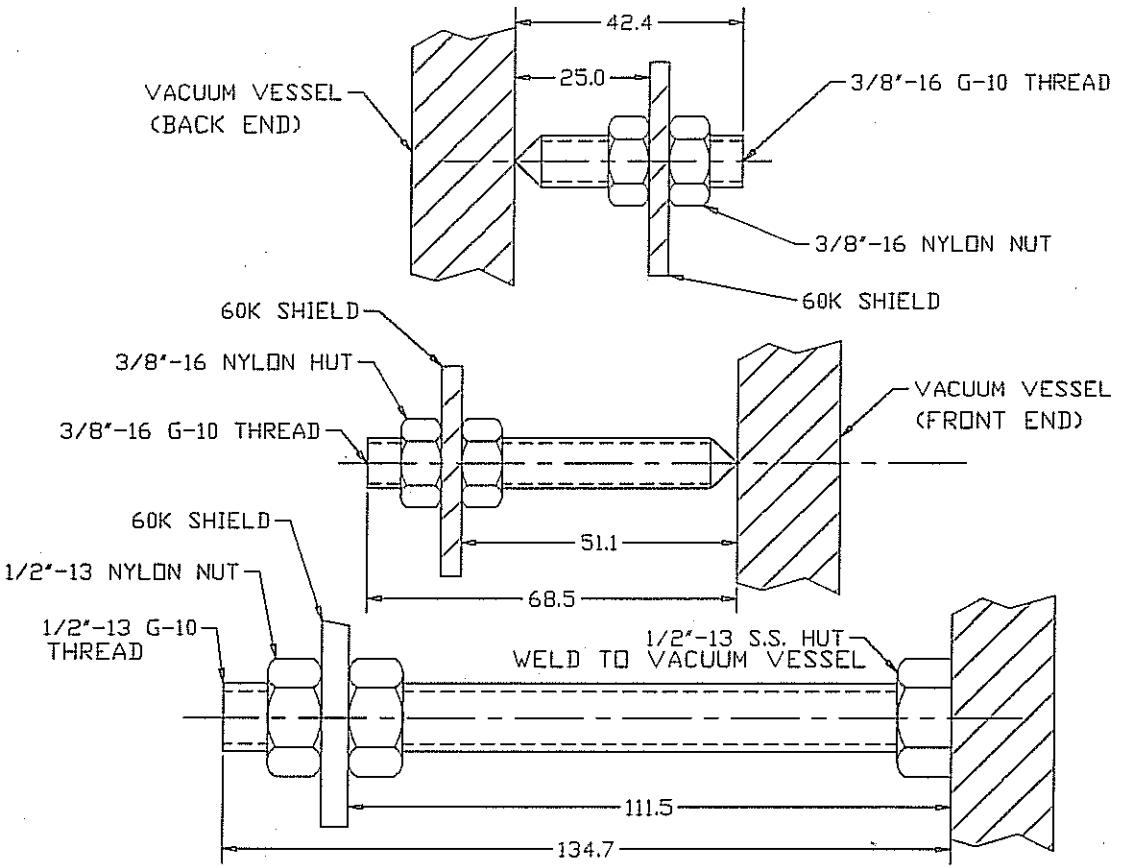

NOTES:
1) DIMENSIONS ARE IN mm

UNLESS OTHERWISE SPECIFIED TOLERANCES:
.XXX ± .005
.XX ± .02

WANG NMR, INC.
550 North canyons Parkway, Livermore, CA 94550

TITLE: THERMAL BUMPER

SIZE: C

DWG NO: MICE-6600

SCALE: DO NOT SCALE

CHAPTER IV

QA Plan, Fabrication Plan and Inspection Plan

IV-1 MICE Solenoid QA Plan

Project QA plan is presented in appendix D

IV-2 Superconductor Fabrication and Inspection Plan

Superconductor is purchased by LBL and fabricated by OK superconductor. Mechanical and electrical characteristics were tested by OK. We shall repeat short sample test for each spool, examine conductor filament, and twisting pitch for each terminal of coil.

IV-3 6061T6 Bobbin Fabrication and Inspection Plan

For good assurance of vacuum leak tightness, the bobbin will be forged 6061T6 aluminum cylinder in one piece length (100.16" long). We require manufacturer's verification of chemical composition before forging and after forging. After forging, we need to examine maximum void size by 100% x-ray. It will be roughly machined as shown in Drwg MICE-001A, then final machined to dimensional tolerance per drawing MICE C001.

It must be deburr, degrease, and finally, leak check to a sensitivity of 1×10^{-10} torr-liter/ sec.

IV-4 Coil ground plan insulation installation and Inspection plan

After inspect bobbin, cleaniness and leak tight. The coil mandrel will be insulated first. Then, the side wall is insulated. We, then, perform megger 5kV test to verify leakage current less than 200 nA.

IV-5 Coil winding plan and inspection plan

We shall setup dust free and metal chip free winding facility. We have written winding instruction as shown in appendix II-9-1. Turn-to-turn short and layer-to-layer short will be measured at the end of each coil layer. The coil will be wet-layer-up, so mixing epoxy must be carefully controlled. Inspection of left over epoxy in the mixing up will provide another proof that epoxy is mixed and cured well.

IV-6 Coil banding, Banding insulation, and Inspection plan

On the last layer of coil surface in each coil, we install ground plan insulation before we install 6 mm thick aluminum banding. After banding, the coil is meggered for 5 kV again with respect to ground and to banding.

Proprietary

IV-7 Installation of Reinforce Aluminum Ring

To assure that the axial force does not open up the coil former and cause epoxy crack and conductor motion, each coil after banding, is welded to reinforce the aluminum ring and assure that the winding pack is tight and well supported after cooldown and after energization. This reinforce ring must be welded without heating the conductor pack.

IV-8 Magnet protection subassembly and Inspection Plan

To make sure protection diode will work at low temperature, diode subassembly will be tested in liquid nitrogen temperature or liquid helium temperature before installed on top of the reinforce ring of coil C.

IV-9 Superconducting Feedthrough fabrication and Inspection Plan

Each MICE tracker solenoid will need six superconducting feedthroughs (A, B, C, D and F, per Fig II-14-1), each rated at 500A, and two trim lead feedthrough, each rated at 100A. We shall purchase two units of UHV feedthrough with four hollow conductors each. Then, we shall perform vacuum soldering for superconducting feedthrough. These feedthroughs will be tested in liquid helium environment for leak tightness. Thermal cycle five times will be performed to verify the vacuum tightness before it is installed.

IV-10 Final Coil Assembly Coil and Inspection

Per Fig II-14-1, coil terminals will be soldered together with coil protection subassembly and superconducting feedthrough. Liquid helium sensor, cernox sensors, pt sensors and voltage taps will be bundled and routed to quench vent line and feedthrough.

Leading superconducting cable wiring between coils will be at the bottom of coil and will have copper to superconductor ration of at least 30 to 1 and at least five times superconducting margin. It will be insulated from each other and from precool line which is also at the bottom of the coil.

IV-11 Helium Shell Installation Plan weld prep, welding procedure and leek check procedure

He shell shall be made of 1/2'' thick 6061 T6 rolled half cylinder as shown in Drwg MICE-C002 and –C002A.

The seam weld will be nearly 100% penetration. The weld preparation is 0.394''x 45°. There is a backup strip 1/8'' thick x 1/2'' wide tacked to inside of the cylinder to prevent torch penetration into the coil during seam weld.

All weldment must be trimmed properly to have good fit and then tack weld before rootpass. Die penetrant inspection must be made and approved before second pass of tig weld.

The weldment at each end flange will be 1/2'' x 1/2'' x 90° weld. It must be tack welded before seam weld.

Proprietary

IV-12 Cold Mass Support Fabrication, installation and Inspection Plan

Cold mass support are fabricated with unidirectional fiberglass per Wang nmr proprietary fabrication process. During fabrication of each support, a small cross sectional element was cut and tested to ultimate strength. Each cold mass support system will be tested to 110% full load for 24 hours.

Each support is then sealed to avoid moisture attack. A safety factor of 4 is designed because it is a plastic structure.

IV-13 Cryocooler Recondenser Fabrication and Cold head installation

4.2K recondenser will be made of OFHC Copper. EDM wire cut will be used to make the heat exchange surface. It will be vacuum braized to a 304L SS enclosure as shown in Drwg MICE-CON-000. It will be chemically cleaned, dry and sealed and leak check.

The contact surface between 4.2 K recondenser and 4.2 K cold head (2nd stage) will be indium (0.002'' to 0.005'') or indium solder or low temperature soft soldered. It will be bolted together with lock washer.

The contact surface between 60K thermal shield and 50-60K first stage cold head will be softsoldered and bolted with lock worker. Bimetal (AL-Cu) and OFHC copper strips will be used to enhance thermal bond between 6061T6 aluminum shield and first stage copper ring.

IV-14 HiTc lead installation and inspection

Because HiTc lead is too brittle to take thermal or mechanical stress. As shown in Drwg MICE-E000, each HiTc lead must be soldered to a flexible heat-conduction element and superconducting cable.

The HiTc lead must be positioned and oriented such that no significant field is per pendicalor to its broadface.

The top end must be at least doubly thermal intercepts to reduce ΔT or it will receive large heat flow from I^2R lead. The top end will be mechanically supported while lower end is free to move.

Both the top end and the bottom end will be softsoldered with Eutectic soft solder.

IV-15 60K Thermal Shield installation and inspection plan

60K thermal shield will have a flux break against azimuthal eddy current. The outer cylinder shield will be assembled with a flux break. The top cylinder half have cutout to allow installation for vent tube and to allow installation of cryocooler cold heads (stage1 and stage2) and HiTc lead thermal intercept. The 60K shield outer cylinder half will be suspended to vacuum vessel. Superinsulation could be installed as blanket.

Proprietary

After installation of 4.2K system, then inner shield (whole cylinder) and end shield will be installed after installation of all 4.2K system and its cold mass suspensions. Spacing between 60K to 4.2 K will be inspected and recorded before and after 60K system assembly weldment.

IV-16 300K Vacuum Vessel and Magnet Support System Installation and Inspection plan

300K outer vacuum vessel is installed in full cylinder. The vacuum cylinder is installed to support 60K shield and 4.2K system. We then adjust all cold mass suspension and inspect the vacuum gap between 4.2K and 60K, and between 60K and 300K the data of vacuum gap will be recorded.

Final assembly will be the weldment of 300K end cap and the 300K penetration ports (pump out, vacuum relief, vacuum feedthroughs, instrumentation feedthrough, cryogens transfer and vent, relief valve and rupture discs, etc). The major inspection will be pump down and leak check all 4.2K system and 300K system.

Proprietary

APPENDIX D

QA PLAN

Wang NMR, Inc.

550 North Canyons Parkway , Livermore, Ca. 94551

Proprietary

Appendix D MICE Solenoid QA plan

D. Wang NMR QA Manual for Project#032706

QUALITY ASSURANCE PLANNING -GENERAL REQUIREMENT

1.0 SCOPE

This plan is applicable to tasks associated with design, engineering, procurement, manufacturing, inspection, and development tasks for superconducting magnet/cryostat.

2.0 QUALITY ASSURANCE PLANNING

This program requirements reviews began during the proposal phase for assessment of equipment, processes, methods, and skills needs. Coordinated development of production and quality assurance methods will continue throughout the engineering design phase and culminate with detailed definition and implementation of the requirements to support magnet fabrication. This process identifies needs for new and unique methods, equipment, and technology which are pursued to resolution.

Project's statement of Work was reviewed for Quality Asssurance requirements. Table D-1 provides a summary of critical requirements to be implemented. The Quality Assurance requirements are typically implemented by testing, measuring, or visual inspection of hardware elementes. Due to the required facilities, the conductor Jc screening will be performed.

To provide a Quality Assurance program which is tailored to the use and importance of the hardware, the criticality of major components will be identified and reported.

D-1. ASSURANCE PLAN ELEMENTS FOR MAGNET TEST

The quality assurance requirements were studied by Wang NMR Inc. to establish Quality Assurance Requirements. Table D-1 provides a summary of critical requirements to be implemented. The Quality Assurance requirements are typically implemented by testing, measuring, or visual inspection of hardware elements.

Proprietary

TABLE D-1:
MAGNET PRODUCTION
QUALITY ASSURANCE PLAN ELEMENTS

CRITICAL TASK	CUSTOMER'S REQUIREMENT	SPECIFICATION
LBL Procure Conductor	Quality Assurance Plan Short Sample Tests Critical Current at 4.2K & Field Level	Per LBL's conductor specification
Cable Specification Cable Test Methods		N/A
Wire Springback Test		
Wire Tensile Test		
Welding & Cleanliness		Per Spec. LBL-10150
	Welder Qualification	ASME CODE SEC.IX
	Procedure Qualification	ASME CODE SEC. IX
	Dimensional Measurements	& Per drawings by
	Reports/Records	Wang NMR Inc.
Vacuum Leak Check Procedure		Per Spec. LBL-10151
Multilayer Superinsulation		Per Spec. LBL-10152
Fabrication, Assembly Test and Shipping		Per Spec. LBL-10154

Proprietary

(TABLE D-1 CONTINUED)

CRITICAL TASK	CUSTOMER'S REQUIREMENT	SPECIFICATION
Coil Winding	Cleanliness Inspection Checklists Electrical Test (Hi-Pot, Ground, etc.) Dimensional Measurement Instrumentation Lead Inspection Records/Reports	Per Winding Instructions of Wang NMR Inc.
Conductor Persistent joint	Visual Inspection Splicing Insulation Inspection Dimensional Measurements Inspection Check List Records/ Photographs	Specification & Procedure to be written by Wang NMR Inc. for each joint
Coil Testing	Cooldown, Charging up, field measurement, High Pot test, Quench Monitoring, field persistent measurement, etc.	Per Coil Testing Instructions of Wang NMR Inc.
Epoxy	Age/shelf life and storage control.	Per Instruction To be Written by Wang NMR
Packaging, Handling, Transportability and Preservation	NAS855	To be Written by Wang NMR
Magnet Shipping	Shipping container to absorb shock and vibration. Wrap in double walled evacuated hot sealed Polyethylene Plastic Bag and Wooden Crate.	Instruction To Be Written by Wang NMR
Name Plates and Product Markings	Per LBL Purchase order	
Final Written Report on Individual Magnet	Parts List Assembly Procedure Material Sources Certification Coil Resistance, Inductance, Continuity, High Pot Test Field Strength, Quench Data	To be Written by Wang NMR

Proprietary

D-2 WANG NMR QUALITY ASSURANCE MANUAL & ORGANIZATION

1.0 OBJECTIVE

This manual establishes the responsibilities for the implementation of the Quality Assurance Program.

2.0 GENERAL

2.1 It is the policy of WANG NMR to assure that the quality, Performance and Reliability of our products meets or exceeds all specification requirements.

2.2 The quality Assurance Program is designed to provide conformance with the ASME Boiler & Pressure Vessel Code VIII Section, "Unfired Pressure Vessels"

2.3 The Quality Assurance group is a key function of the corporate administration group and provides direction and service to each of the corporate divisions as required by contract or operational needs. Our QA group reports directly to the project manager. The Quality Assurance procedure chart is shown in Table D-1.

3.0 RESPONSIBILITY

3.1 The WANG NMR Quality Assurance group has overall responsiblity for the formulation and maintenance of the "Quality Program".

3.2 The implementaion of each of the procedures is the responsibility of the organizations as defined in the Manual. The methods of implementation are defined in operating procedures, work instructions, route cards or other documents appropriate to the circumstances. The documents:

Proprietary

3.2.1 Shall provide the criteria for the performance of the function.

3.2.2 Shall be prepared, issued and maintained by the organization responsible for the performance of the work.

4.0 PROCEDURE

4.1 Quality Assurance plans are developed for each manufacturing operation or contract as applicable.

4.2 The elements of the "Quality Program" are defined by the Quality Assurance Procedures.

4.3 Quality Assurance procedure are implemented by one of the following:

4.3.1 Process Control Chart.
4.3.2 Manufacturing Instruction.
4.3.3 Receiving Inspection Data Sheet.
4.3.4 Dimensional Inspection Data Sheet.
4.3.5 Test Procedure.

5.0 ADMINISTRATION OF THE QA PLAN

The principal investigator (PI) for Wang NMR Inc. is Dr. Bert Wang. The PI will be responsible for the administration and the technical direction of the project within his organization.

Either Mr. Bob Wahrer or Dr. Henry Chen will be responsible for the independent assessment of all project elements for compliance to this plan and for providing guidance for correcting observed deficencies. He will maintain those technical records to ensure that procedures, traceability of data or calibration are properly maintained, including those at conductor subcontractor's facility.

6.0 WANG NMR PURCHASING PROCEDURE

This Procedure defines the actions taken by WANG NMR Purchasing and Quality Assurance for procurement of materials and services to meet the requirments of applicable contract.

Proprietary

6.1 RESPONSIBILITY

(1). The Buyer (Purchasing) is responsible for procurement of items and services in accordance with the approved requisitions, purchase order, specifications, and vendor list.

(2). "Approved" requisitions and purchase orders require concurrence of Quality Assurance. Such concurrence is indicated by signature of Quality Assurance.

(3). Quality Assurance is responsible for maintaining and distributing to purchasing the list of approved vendors. Changes and alterations to the list are kept current by distribution of the Vendor Quality Survey Checklist (VQSC).

QUALITY PROCEDURE

See Quality Assurance Flow Chart TABLE D-2.

Proprietary

TABLE D-2

PROCUREMENT QUALITY ASSURANCE FLOW CHART

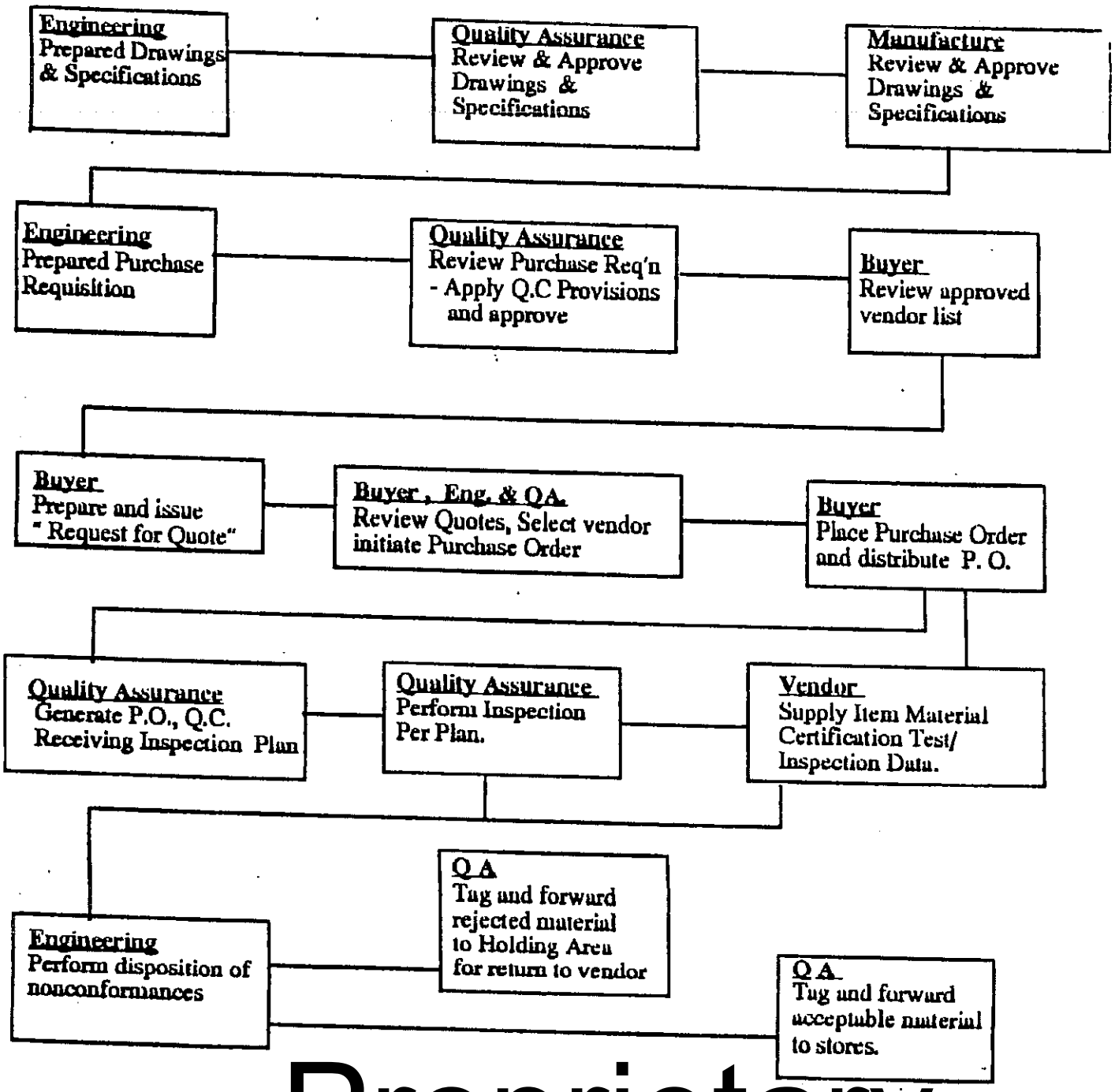

Proprietary

D-3 QUALITY CONTROL PROGRAM

1.0 Design Control

The QA Manager is an integral part of the design process. Through this approach, he will maintain his first hand technical knowledge of the program and will be aware of the critical elements. He will review all drawings and specifications for design completeness, producibility, and inspectability. He will ensure that critical inspections are defined and identified on the drawing. During the design phase, these reviews will be basically on-the-drawing-board reviews involving the designer, manufacturing, engineering, and quality assurance.

Design adequacy shall be verified by QA manager, signature approval by the QA Manager of drawings and specifications denotes that they are in accordance with applicable specifications, codes, and standards. QA will participate in all formal design reviews with the customer's personnel. Design changes shall be governed by control changes.

Critical measurements tolerances and test criteria shall be specified in the design documents.

2.0 Procurement Control

Our Procurement Quality Assurance provides the systems and disciplines to ensure that procured material and services will meet the customer's technical and quality requirements. These controls include requirement definition and monitoring of processes, and terminate with the acceptance of hardware on the dock. Control is exercised through (1) establishing program plan requirements, (2) review of purchase orders for contract and engineering requirements, (3) preparing instructions for source inspection, and (4) defining receiving inspection requirements for in-house inspection.

Proprietary

3.0 Material Certifications and Control

Our procurement documents require that suppliers identify all material and components before shipment. Identification such as chemical analysis, supplier heat or batch number, and other identifiers are verified and then documented in historical records retained in Receiving Inspection. Traceability of material and components is maintained and documented.

Material and components accepted by Receiving Inspection are tagged or inspection-stamped, as appropriate, and released to stores. Material and components are not accepted into stores or for use without evidence of acceptance by Receiving Inspection. Material flow into or out of stores is controlled by the Material Control function. Material found to be nonconforming is documented and segregated to prevent its usage pending disposition instructions. Processing of nonconformances is described in Section 9.

4.0 Training and Qualification Control

Training and certification programs are conducted to ensure that personnel working with selected special processes have the necessary skill and knowledge to accomplish the processes satisfactorily and/or to verify quality.

Certification programs which ensure that employees possess the skills and knowledge to perform tasks critical to the quality and performance of the product requires approval from Dr. Henry Chen, the Quality Assurance Manager. Upon successful completion of certification, a certification card is issued to each certified employee. A separate card is used for each category of certification. Certified employees have their certification card(s) available in the work area as evidence of their certified status. Table D-3 list the skills presently requiring certification.

Proprietary

Table D-3
Quality Assurance Administered Certification Program

- Hand-Soldered Electrical Connections
- Welding
  TIG Welding
- Coil Winding
- Coil Assembly
- Cryostat Assembliy Alignment
- Conductor Joints
- Conductor Insulation
- Coil Insulation
- Install Superinsulation
- Cryogens Transfer
- Leak Checking
- Short Sample Ic Testing
- Coil Testing
- Conductor and Coil Heat Treatment
- Coil Epoxy Application
- Magnet Cooldown and Energization
- Shipping Packaging

5.0 Fabrication, Construction, and Installation Control

Our standard QA procedure is to approve and certify manufacturing processes and equipment to both customer and Wang NMR the codes and standards prior to production use .

Sequential control of operations and processes, by critically placed inspection steps, will be an integral feature of quality assurance at both WANG NMR and our suppliers. Personnel are trained and certified for the peformance of special processes, such as welding and soldering. Retraining to ensure that competence levels are maintained is done to an established schedule.

The scope of inspection activities range from verification of material issued for production orders through final inspection and testing of the completed magnets. Inspection responsibilities include:

Proprietary

1. Inspection and proofing of production tools

2. Verifying use of specified material, parts, and components.

3. Nondestructive testing.

4. Monitoring of processes per manufacturing specifications

   and process control requirements.

5. In-process inspections during fabrication, assembly, installation, and tests.

6. Inspections of completed product.

7. Quality surveillance inspection reviews of manufacturing operations, stockrooms, support areas, and laboratories to detect, preclude, and correct conditions that may adversely affect product quality.

8. Ensuring compliance with calibration requirements.

Proprietary

6.0 Inspection and Test Control

Inspection will ensure that testing is done in accordance with approved inspection and test procedures, and will certify recorded data. These inspection requirements are generated during the QA review of engineering design and test documents. Unique inspection techniques not presently in our QA system will require the development and verification of new procedures. All inspection and test results will be documented both at Wang NMR Inc., and suppliers.

Cleanliess to exclude metallic particles will be of paramount importance, and will require particular inspection effort during curing and splicing operations. Also, debris which could clog cooling paths will be excluded.

NDT methods will be used to examine welds of structural elements, and to detect potential leakage sites. During magnet manufacture, particular effort will be directed toward assurance of good welds (penetration, etc.), elimination of metal splatter, control of dimensions, and testing for leakage.

Engineering requirements are translated into work instructions (planning) for production/inspection use. The planning, special tools, visual aids, visual assembly aids,etc. provides specific instructions regarding material requirements, sequence of operations, setup instructions, required tools, processing instructions, inspeciton points, and inspection instructions. Quality Engineering establishes the inspection requirement and inputs the requirements to planning.

Inspection performs visual inspection and dimensional verification by measurement in accordance with requirements an other special inspections/tests required by drawing/process specifications. Inspection data stations containing current documents are established and maintained in fabrication and assembly areas to assist the inspectors in accomplishing their assigned tasks. Planning and production hardware that have been accepted by Inspection, augmented by standard inspection forms and records, provide objective evidence of task accomplishment and conformance with requirements.

Proprietary

7.0 Document and Configuration Control

The Engineering checking reviews releasable engineering documentation to ensure dimensional accuracy, completeness of design, and compliance with contractual and in-house drafting practices.

Operating policies for all engineering data files are defined and standardized to ensure issuance of the latest engineering data to the users. Obsolete engineering documents are removed from all points of issue (blueprint cribs) upon receipt of superseding data. Obsolete engineering documents are removed from points of use (manufacturing and inspection areas) when the work instruction document references a later engineering change letter.

8.0 Handling, Storage, and Shipping Controls

QA will review and approve handling, shipping, packaging, and storage procedure to ensure no deterioration of the product occurs. Specific requirements are incorporated in formal work instructions and procedures to ensure that handling devices are those specified and that loading methods and transportation vehicles are suitable.

9.0 Nonconformance and Corrective Action

All nonconformances will be documented. This documentation is used to control discrepant material hardware segregation, material review and data submittal. Discrepant items and material will be identified and segregated from acceptable items and material.

The QA Manager will control:

- Disposition of submitted articles or material designated as nonconforming
- Accurate records of corrective actions
- Failure analysis investigations as required

All nonconformance items affecting system interface and product performance will be submitted to CUSTMOER QA representative for approval with our recommended disposition. It is recommended that an a customer quality assurance

Proprietary

representative be on call as required to expedite "repair" and "use-as-is" dispositions.

10. Control of Measuring and Test Equipment

For reportable data and inspection, calibrated measuring and test equipment will be used. Calibration of this equipment will be performed in accordance with the following requirements.

- Measuring and test equipment will be controlled, calibrated, adjusted, and maintained to ensure accuracy, at prescribed intervals or prior to use, against certified equipment with traceability to nationally recognized standards.

- Calibration will be performed by Wang NMR Inc. or by an outside equipment calibration service approved by Wang NMR Inc. engineering and QA.

- All calibrations will be performed to manufacturer's approved procedures.

- The accuracy of the standard shall be at least 4 times better than allowable tolerance of the instrument.

- Equipment will be suitably marked to indicate the calibration status by sticker or other suitable mens.

- Calibration labels will note who performed the calibration, the date of calibration and the date recalibration is due.

- Calbrated equipment shall be recalled from use on or prior to the recalibration date and not returned until the appropriate calibration is accomplished.

- Measuring and test equipment consistently found to be out calibration is to be repaired or replaced.

- If measuring and test equipment is determined to be out of calibration a record of usage will be reviewed to determining if any reportable data or acceptance of items are suspect. Wang NMR customers will be informed of any such suspect calibration.

- These requirements do not apply to tape measures, rules, levels, and other such devices.

Proprietary

D-4 QUALITY PROBLEM CORRECTIVE ACTION

1.0 INTRODUCTION

This Quality Assurance Manual describes ways to address corrective action in Wang NMR Inc. projects and facility operations. Its intent is to help the writer of QA plans consider all pertinent aspects of feedback and problem correction, and in a manner that requires action only where needed and the generation of records only if beneficial.

Our QA program guidelines are presented in four stages :

(1) response to a detected quality problem

(2) minimum requirements for control of corrective action

(3) a control system using the corrective action record form that is readily adaptable to most QA plans

(4) optional measures to ensure specific benefits from system application.

Examples of benefits assured by using a controlled system for corrective action are as follows :

Corrective action decisions are made by designated personnel.

An opportunity is given those responsible for the original requirements to concur, stop, or make changes in correction planning.

Changes in configuration or procedure, including the rationale are documented.

There is a "closing of the loop" when detection of the quality problem has been documented.

Problem causes are identified and corrected to prevent recurrence.

Feedback occurs where management has infrequent contact, or to alert others.

Follow up is maintained for corrective action that is complicated by interfaces or that requires an extended schedule to complete the correction.

Proprietary

Nonconforming material or items are not used in key assemblies or systems.

Data is gathered that is useful in evaluating trends.

2.0 PURPOSE

The goals of quality problem corrective action are :

* Regain acceptable conditions and hardware.

* Provide feedback to management and others.

* Prevent recurrence of the problem.

This QA Guide describes control requirements and methods for ensuring that these goals are reached.

3.0 SCOPE

These guidelines are for the corrective action control system in a QA plan for Wang NMR activities. Interfacing organizations and Wang NMR subcontractors are expected to have their own QA program that includes a suitable quality problem corrective action control system for the scope of work.

The kinds of quality problems considered in this Guide are :

* Hardware nonconformances, with respect to either specified requirement or necessary characteristics for the intended function.

* Specific problems in the application of administrative control procedures and practices.

* Persistent conditions that can cause a specific problem to recur.

Corrective action for QA audit and surveillance findings should be initiated by a person designated in the QA audit section of the plan. Design changes and revision to documents that prescribe design or activities should be fully addressed in the QA plan sections on design control (or configuration control) and document control, respectively.

Proprietary

4.0 RESPONSE TO A DETECTED QUALITY PROBLEM

The QA plan writer must decide whether to (1) define the responsibility and authority of those on the job to ensure response, (2) require that all quality problems be referred to a designated person, or (3) leave it to the designated person to set his own rules. Issues to consider in making this decision include :

* Assignment of responsibility for preventing escalation of the problem or use of nonconforming hardware

* The conditions under which to permit those on the job to "fix and continue." Suggested conditions include all of the following, as applicable :

  (1) The problem is localized - alerting others serves no purpose.

  (2) Items or conditions after corrective action will conform to existing requirements, configuration records, or normal practice.

  (3) The method of corrective action is straight forward - no complex interfaces, or extended corrective action schedule.

  (4) The problem and corrective action will not violate agreements, e.g., planning data, products, schedule, or costs.

  (5) Project management does not require a record for use in Trend analysis or Vendor monitoring.

  (6) Those in the work area can fix the problem - no written/telephone feedback is necessary to initiate action.

* When fix and continue by those on the job is not permitted :

  (1) Who is to be notified to initiate corrective action ?

  (2) Should anyone be alerted in the case of safety or functional problems ?

  (3) When should a record be started any by whom ?

Proprietary

(4) How complete and reliable is the feedback from those on the job ?

5.0 MINIMUM REQUIREMENTS FOR CONTROL OF CORRECTIVE ACTION

1. Responsibility for initiating, planning, authorizing and ensuring timely and effective correction with respect to (1) the specific problem, and (2) the cause (to prevent recurrence).

Designate one or more persons (by position) in the QA plan for this responsibility. If more than one person is designated, be sure that the interfaces is defined and their responsibilities do not overlap or leave a gap.

2. Quality Problem Notification (Feedback) for deviations from documented requirements that are caused by the problem and / or corrective action.

Define a form (for format and distribution system in the QA plan or implementing procedure, for this written notification should be assigned to those responsible for planning corrective action.

3. Management Approval for proposed corrective action that exceeds the authority of the person responsible for planning and authorization.

Requirements should be defined in the QA plan for approval by project management and the responding agency, along with guidelines for when this action is necessary.

Proprietary

Chapter V

Project Work Breakdown Structure (WBS) and Project Schedule

Project Progress Status : All tasks on time so far.

The project is broken down into many tasks. Task leader and performance schedule is planned according to proper time sequence and according to each task leader specialized talent. All design tasks are on schedule.

The conductor was delivered by LBL and received by Wang NMR in early August 2006.

LBL will need to order cryocooler and power supply and deliver to Wang NMR before end of February 2007. Wang NMR has ordered forging aluminum cylinder in August 06, Wang NMR need to order Hi-Tc lead and vacuum feed thru in September 06.

Proprietary

WBS# and Project Schedule - MICE PROJECT

WBS#	Task Description	Jun '06	Jul '06	Aug '06	Sept '06	Oct '06	Nov '06	Dec '06	Jan '07	Feb '07	Mar '07	Apr '07	May '07	Jun '07	Jul '07	(PIC)*
1.1.0	**PROJECT MANAGEMENT & REPORTING**															A
1.1.1	Design Review & Report															E
1.1.2	Procurement Administration															E
1.1.3	QA/ QC Administration & Test Report															B/F
2.1.0	**4.2K COIL DESIGN & CALCULATION**															A
2.1.1	Field Design of Central Field Profile & Peak Field on Conductor															E
2.1.2	Conductor Design, Design Operating Current, $_cIB_c$ & Load Line Design															A
2.1.3	Conductor Insulation Design															A
2.1.4	Layer-to-Layer Insulation Design															A
2.1.5	Coil Sidewall Design & Coil Mandrel Insulation Design, & Design of Voltage Breakdown from Coil to Ground															A
2.1.6	Design of Turn-to-Turn Width & Layer-to-Layer Thickness															A
2.1.7	Coil Winding Pack Design															A
2.1.8	Design of Coil Former															A/D
2.1.9	Coil Winding Specification & Winding Instruction															A/E
2.1.10	Calculation of Coil Self Inductance, Mutual Inductance, & Coil Stored Energy															E
2.1.11	Coil Protection Hardware Design															B
2.1.12	Coil Assembly Design, Design of Conductor Splicing, & Design for the Leading Conductor and Support and Insulation															A/D
2.1.13	Coil Precool Design															A/D
2.1.14	Design of Magnet Protection System															B
2.1.15	Coil Quench Analyses															A/F
2.1.16	Finite Element Coil Stress Analyses															D
2.1.17	Coil Instrumentation Design															A/B
2.1.18	Coil Cooldown Analyses															A/C
2.1.19	Cold Mass Suspension Design															D
2.1.20	Helium Vessel Shell Design															D
2.1.21	4.2K Heat Leak Analyses															A
2.1.22	4.2K Vacuum Penetration Feedthru Design for 300A, 50A, & Instrumentation															A/D
2.1.23	Helium Inlet & Outlet Piping Design															A/D
2.1.24	Helium Recondenser Design															C
2.1.25	ΔT Analyses															A
2.1.26	Superinsulation Design for 4.2K Surface															A
2.2.0	**50-60K MAGNET THERMAL SHIELD DESIGN**															A
2.2.1	Inner Shield Design with Flux Break & Superinsulation															A/D

Proprietary

WBS#	Task Description	Jun '06	Jul '06	Aug '06	Sept '06	Oct '06	Nov '06	Dec '06	Jan '07	Feb '07	Mar '07	Apr '07	May '07	Jun '07	Jul '07	(PIC)*
2.2.2	Outer Shield Design with Flux Break & Superinsulation															A/D
2.2.3	End Shield Design with Flux Break & Superinsulation															A/D
2.2.4	Conduction Cooling & Maximum ΔT for Magnet Thermal Shield															A/D
2.2.5	Thermal Shield Cold Mass Suspension Design & Thermal Intercept Design															A/D
2.2.6	Instrumentation Design for Thermal Shield															B
2.2.7	Superinsulation Design for Thermal Shield															A
2.3.0	**HIGH T_c LEAD DESIGN & SPECIFICATION**															ADBE
2.3.1	300A Hi-T_c Lead Design & Specification															A
2.3.2	50A Hi-T_c Lead Design & Specification															A
2.3.3	300A Thermal Intercept Design & ΔT Calculation at Hot End and Cold End															A/D
2.3.4	50A Thermal Intercept Design & ΔT Calculation at Hot End and Cold End															A/D
2.3.5	Fringing Field Calculation at Hot End and Cold End of Hi-T_c Leads															E
2.3.6	Installation Design, Thermal Contraction, & Thermal Stress Assessment of Hi-T_c Leads															A/D
2.3.7	Instrumentation Design for Hi-T_c Leads															B
2.4.0	**VACUUM VESSEL DESIGN**															A/D
2.4.1	ASME Pressure Vessel Code Calculations & Vacuum Vessel Pressure Rating															A
2.4.2	High Current (300A & 50A) Vacuum Feedthru Design															A
2.4.3	Instrumentation Feedthru Design for Vacuum Vessel															A
2.4.4	Cold Mass Support Design															D
2.4.5	Finite Element Stress Analyses of Vacuum Vessel															D
2.4.6	Service Port (Neck) Design for Cryogen Feed & Vent & Pressure Relief															A/D
2.4.7	Vacuum Pumping Ports Design, Vacuum Gage, & Pressure Relief															A
2.4.8	Vacuum Vessel Support Design															D
2.4.9	Vacuum Vessel Service Tower for Cryocooler Installation															A/D
2.4.10	Interface Design for Attached Device (Spec. 3.10)															D
2.5.0	**CRYOCOOLER SERVICE TOWER DESIGN**															D
2.5.1	Vacuum Tight Interface Design for Cryocooler & Vacuum Vessel															D
2.5.2	Thermal Intercept Interface Design for 1st Stage, Thermal Shield, & Hi-T_c Lead															D
2.5.3	Thermal Intercept Interface Design for 2nd Stage & Recondenser															D
3.1.0	**WRITE SPECIFICATION & PROCUREMENT**															A/E
3.1.1	Write Specification & Procure Conductor (Done by LBL)															
3.1.2	Procure Coil Formers															A/E
3.1.3	Write Specification & Procure Hi-T_c Leads															A/E
3.1.4	Procure High Current Feedthru, Instrumentation Feedthru, and Vacuum Gage															A/E
3.1.5	Procure Temperature Sensors & Readout for 4.2K and Thermal Shield															A/E
3.1.6	Procure Liquid Helium Level & Readout															A/E

Proprietary

APPENDIX II-9-1

UNIT 1 – Winding Instructions

For MICE Spectrometer Solenoid Magnets

Wang NMR, Inc.

550 North Canyons Parkway , Livermore, Ca. 94551

Proprietary

COIL WINDING INSTRUCTION- MICE MAGNET

COIL WINDING LOG

SUPERCONDUCTOR USAGE FOR :

PROJECT: MICE TRACKER MATCH1 MAGNET

DATE:
OPERATOR:

COIL # : MATCH 1 (UNIT #1)

NBTI CONDUCTOR

WIRE: 5 T at 868 A

PEAK FIELD : 4.43 T AT 214.2 A

LAYER TO LAYER INSULATION : 2.5 MIL FIBERGLASS

WINDING METHOD: WET WIND WITH STY

	Z1	Z2
Z(CM)	2.3416	22.4584
R(CM)	25.8000	30.2699
COIL DIA. (IN INCH):	**20.3150**	**23.8346**
	(I.D)	**(O.D.)**

(JUNE 28, 06)

	width	thick	SP =
retangular condutor :	1.6460	0.9960 (MM)	56.0499

WINDING DIMENSION (IN CM): 0.167640 0.106426

TURN TO TURN 0.06600 INCH 0.16764 CM

LAYER TO LAYER : 0.04190 INCH 0.10643 CM

WNDING TENSION: 20 TO 25 LB.
120 TURN PER LAYER
42 LAYERS

REMARK :

LAYER #	# Turn /Layer	Length per Layer (FEET)	INC/LAYE (FEET)	ACCUM/L (FEET)	FINISHED O. D. (INCH)	SUPPLY FOOTAGE	LEFTOVER FOOTAGE	DATE: COMMENT	*Q. C.* ACTUAL TURN	FINISHED O. D. (IN.)	REMARK SHORT CHECKING
PREPARATION MEASUREMENT: COIL STARTING DIA. (IN INCH) :									_____		
				SPOOL BILLET #:		36680	33140	METER			
1	120	638.21	2.6327	641	20.3988	108699	108058				
2	120	640.85	2.6327	1282	20.4826	(LIST FT)	107418				
3	120	643.48	2.6327	1925	20.5664		106774				
4	120	646.11	2.6327	2571	20.6502		106128				
5	120	648.75	2.6327	3220	20.7340		105479				
6	120	651.38	2.6327	3871	20.8178		104828				
7	120	654.01	2.6327	4525	20.9016		104174				
8	120	656.64	2.6327	5182	20.9854		103517				
9	120	659.28	2.6327	5841	21.0692		102858				
10	120	661.91	2.6327	6503	21.1530		102196				
11	120	664.54	2.6327	7168	21.2368		101531				
12	120	667.17	2.6327	7835	21.3206		100864				
13	120	669.81	2.6327	8505	21.4044		100194				
14	120	672.44	2.6327	9177	21.4882		99522				
15	120	675.07	2.6327	9852	21.5720		98847				
16	120	677.70	2.6327	10530	21.6558		98169				
17	120	680.34	2.6327	11210	21.7396		97489				
18	120	682.97	2.6327	11893	21.8234		96806				

Proprietary

COIL WINDING INSTRUCTION- MICE MAGNET

LAYER #	# Turn /Layer	Length per Layer (FEET)	INC/LAYE (FEET)	ACCUM/L (FEET)	FINISHED O. D. (INCH)	SUPPLY FOOTAGE	LEFTOVER FOOTAGE	DATE: COMMENT	Q. C. ACTUAL TURN	Q. C. FINISHED O. D. (IN.)	REMARK SHORT CHECKING
19	120	685.60	2.6327	12579	21.9072	96806	96120				
20	120	688.24	2.6327	13267	21.9910		95432				
21	120	690.87	2.6327	13958	22.0748		94741				
22	120	693.50	2.6327	14652	22.1586		94048				
23	120	696.13	2.6327	15348	22.2424		93352				
24	120	698.77	2.6327	16046	22.3262		92653				
25	120	701.40	2.6327	16748	22.4100		91951				
26	120	704.03	2.6327	17452	22.4938		91247				
27	120	706.66	2.6327	18158	22.5776		90541				
28	120	709.30	2.6327	18868	22.6614		89831				
29	120	711.93	2.6327	19580	22.7452		89119				
30	120	714.56	2.6327	20294	22.8290		88405				
31	120	717.19	2.6327	21011	22.9128		87688				
32	120	719.83	2.6327	21731	22.9966		86968				
33	120	722.46	2.6327	22454	23.0804		86245				
34	120	725.09	2.6327	23179	23.1642		85520				
35	120	727.73	2.6327	23907	23.2480		84793				
36	120	730.36	2.6327	24637	23.3318		84062				
37	120	732.99	2.6327	25370	23.4156		83329				
38	120	735.62	2.6327	26106	23.4994		82594				
39	120	738.26	2.6327	26844	23.5832		81855				
40	120	740.89	2.6327	27585	23.6670		81114				
41	120	743.52	2.6327	28328	23.7508		80371				
42	120	746.15	2.6327	29074	23.8346		79625				

(LEFTOVER FOOTAGE ESTIMATE 24256 METER)

LEAD OUT (lead wire both in and out reserved15 ft)

ACTUAL WINDING RAD.

I.D.=

FINISH OUTER RADIAL.= 30.2699 CM

TOTAL TURNS = 5040

DESIGN TURNS 30.2699

CHECKING FINAL O.D. (IN INCHES)=

Proprietary

COIL WINDING INSTRUCTION- MICE MAGNET

COIL WINDING LOG

SUPERCONDUCTOR USAGE FOR :

PROJECT: MICE MATCH2 MAGNET

DATE:
OPERATOR:

COIL # : MATCH 2 (unit #1)

NBTI CONDUCTOR

WIRE: 5 T at 872 A

PEAK FIELD : 4.01T AT 251.8 A

LAYER TO LAYER INSULATION : 2.5 MIL FIBERGLASS

WINDING METHOD: WET WIND WITH STY

		Z1	Z2
	Z(CM)	46.4254	66.3746
	R(CM)	25.8000	28.7799
	COIL DIA. (IN INCH):	**20.3150**	**22.6613**
		(I.D)	**(O.D.)**

(JUNE 28, 06)

	width	thick	
retangular condutor :	1.6460	0.9960 (MM)	SP = 56.0499

CONDUCTOR DIMENSION (IN CM): 0.167640 0.106426

TURN TO TURN 0.06600 INCH 0.16764 CM

LAYER TO LAYER : 0.04190 INCH 0.10643 CM

WNDING TENSION: 20 TO 25 LB.
119 TURN PER LAYER
28 LAYERS

REMARK :

LAYER #	# Turn /Layer	Length per Layer (FEET)	INC/LAYE (FEET)	ACCUM/L (FEET)	FINISHED O. D. (INCH)	SUPPLY FOOTAGE	LEFTOVER FOOTAGE	DATE: COMMENT	Q. C. ACTUAL TURN	FINISHED O. D. (IN.)	REMARK SHORT CHECKING
PREPARATION MEASUREMENT: COIL STARTING DIA. (IN INCH) :									_____		
				SPOOL BILLET #:		36679	6683	METER	(LEFTOVER FROM UNIT#1 CENTER COIL)		
1	119	632.90	2.6107	636	20.3988	21920	21285				
2	119	635.51	2.6107	1271	20.4826	(LIST FT)	20649				
3	119	638.12	2.6107	1909	20.5664		20011				
4	119	640.73	2.6107	2550	20.6502		19370				
5	119	643.34	2.6107	3193	20.7340		18727				
6	119	645.95	2.6107	3839	20.8178		18081				
7	119	648.56	2.6107	4488	20.9016		17433				
8	119	651.17	2.6107	5139	20.9854		16781				
9	119	653.78	2.6107	5793	21.0692		16128				
10	119	656.39	2.6107	6449	21.1530		15471				
11	119	659.00	2.6107	7108	21.2368		14812				
12	119	661.62	2.6107	7770	21.3206		14151				
13	119	664.23	2.6107	8434	21.4044		13486				
14	119	666.84	2.6107	9101	21.4882		12819				
15	119	669.45	2.6107	9770	21.5720		12150				
16	119	672.06	2.6107	10442	21.6558		11478				
17	119	674.67	2.6107	11117	21.7396		10803				
18	119	677.28	2.6107	11794	21.8234		10126				

Proprietary

COIL WINDING INSTRUCTION- MICE MAGNET

LAYER #	# Turn /Layer	Length per Layer (FEET)	INC/LAYE (FEET)	ACCUM/L (FEET)	FINISHED O. D. (INCH)	SUPPLY FOOTAGE	LEFTOVER FOOTAGE	DATE: COMMENT	Q. C. ACTUAL TURN	Q. C. FINISHED O. D. (IN.)	REMARK SHORT CHECKING
19	119	679.89	2.6107	12474	21.9072	10126	9446				
20	119	682.50	2.6107	13157	21.9910		8764				
[illegible]	119	685.11	2.6107	13842	22.0748		8079				
[illegible]	119	687.72	2.6107	14529	22.1586		7391				
23	119	690.33	2.6107	15220	22.2424		6700				
24	119	692.94	2.6107	15913	22.3262		6008				
25	119	695.56	2.6107	16608	22.4100		5312				
26	119	698.17	2.6107	17306	22.4938		4614				
27	119	700.78	2.6107	18007	22.5776		3913				
28	119	703.39	2.6107	18711	22.6614		3210		(THE END, STORAGE)		
			LEAD OUT								
									ACTUAL WINDING RAD.		
									I.D.=		
									CHECKING FINAL O.D. (IN INCHES)=		

FINISH OUTER RADIAL.= 28.7799 CM

TOTAL TURNS = 3332

DESIGN TURNS 28.7799

Proprietary

COIL WINDING INSTRUCTION- MICE MAGNET

COIL WINDING LOG

SUPERCONDUCTOR USAGE FOR :

PROJECT: MICE CENTRE MAGNET

DATE:
OPERATOR:

COIL # : CENTRE (UNIT #1)

NBTI CONDUCTOR

WIRE: 5 T at 872 A

PEAK FIELD : 4.19 T AT 265.9 A

LAYER TO LAYER INSULATION : 2.5 MIL FIBERGLASS

WINDING METHOD: WET WIND WITH STY

	Z1	Z2 (WARM DIMENSION)
Z(CM)	105.6851	237.1149
R(CM)	25.8000	27.9285
COIL DIA. (IN INCH):	**20.3150**	**21.9909**
	(I.D)	**(O.D.)** (JUNE 28, 06)

	width	thick	SP =
retangular condutor :	1.6460	0.9960 (MM)	
CONDUCTOR DIMENSION (IN CM):	0.167640	0.106426	
TURN TO TURN 0.06600 INCH	0.16764 CM		
LAYER TO LAYER : 0.04190 INCH	0.10643 CM		

WNDING TENSION: 20 TO 25 LB.
784 TURN PER LAYER
20 LAYERS

REMARK :

LAYER #	# Turn /Layer	Length per Layer (FEET)	INC/LAYE (FEET)	ACCUM/L (FEET)	FINISHED O. D. (INCH)	SUPPLY FOOTAGE	LEFTOVER FOOTAGE	DATE: COMMENT	Q. C. ACTUAL TURN	Q. C. FINISHED O. D. (IN.)	REMARK SHORT CHECKING
PREPARATION MEASUREMENT: COIL STARTING DIA. (IN INCH) :									_____		
				SPOOL BILLET #:		36679	33140	METER			
1	784	4169.67	17.2001	4187	20.3988	108699	104512				
2	784	4186.87	17.2001	8374	20.4826	(LIST FT)	100325				
3	784	4204.07	17.2001	12578	20.5664		96121				
4	784	4221.27	17.2001	16799	20.6502		91900				
5	784	4238.47	17.2001	21038	20.7340		87662				
6	784	4255.67	17.2001	25293	20.8178		83406				
7	784	4272.87	17.2001	29566	20.9016		79133				
8	784	4290.07	17.2001	33856	20.9854		74843				
9	784	4307.27	17.2001	38163	21.0692		70536				
10	784	4324.47	17.2001	42488	21.1530		66211	→	LEAD IN AND OUT FOR MAGNET PROTECTION		
11	784	4341.67	17.2001	46830	21.2368		61870		APPEOX. 6 FT (DON'T CUT THE CONDUCTOR)		
12	784	4358.87	17.2001	51188	21.3206		57511				
13	784	4376.07	17.2001	55565	21.4044		53135				
14	784	4393.27	17.2001	59958	21.4882		48741				
15	784	4410.47	17.2001	64368	21.5720		44331				
16	784	4427.67	17.2001	68796	21.6558		39903				
17	784	4444.87	17.2001	73241	21.7396		35458				
18	784	4462.07	17.2001	77703	21.8234		30996				

Proprietary

COIL WINDING INSTRUCTION- MICE MAGNET

LAYER #	# Turn /Layer	Length per Layer (FEET)	INC/LAYE (FEET)	ACCUM/L (FEET)	FINISHED O. D. (INCH)	SUPPLY FOOTAGE	LEFTOVER FOOTAGE	DATE: COMMENT	Q. C. ACTUAL TURN	Q. C. FINISHED O. D. (IN.)	REMARK SHORT CHECKING
19	784	4479.27	17.2001	82182	21.9072	30996	26517				
20	784	4496.47	17.2001	86679	21.9910		22021				
									(LEFTOVER ESTIMATE 6683 METER, CONTINUED		
									TO WIND UNIT #1 MATCH #2 COIL)		
			LEAD OUT								
									ACTUAL WINDING RAD.		
									I.D.=		
									CHECKING FINAL O.D. (IN INCHES)=		

FINISH OUTER RADIAL.= 27.9285 CM

TOTAL TURNS = 15680

DESIGN TURNS 27.9285

Leftover 6688

Proprietary

COIL WINDING INSTRUCTION- MICE MAGNET

COIL WINDING LOG

SUPERCONDUCTOR USAGE FOR :

PROJECT: MICE END COIL#1 MAGNET

DATE:
OPERATOR:

COIL # : END COIL#1 (UNIT #1)

NBTI CONDUCTOR

WIRE: 5 T at 872 A

PEAK FIELD : 5.90 T AT 249.5 A

LAYER TO LAYER INSULATION : 2.5 MIL FIBERGLASS

WINDING METHOD: WET WIND WITH STY

	Z1	Z2 (WARM DIMENSION)
Z(CM)	90.8679	101.9321
R(CM)	25.8	31.7599
COIL DIA. (IN INCH):	**20.3150**	**25.0078**
	(I.D)	**(O.D.)** (JUNE 30, 06)

	width	thick	SP =
retangular condutor :	1.6460	0.9960 (MM)	

CONDUCTOR DIMENSION (IN CM): 0.167640 0.106426

TURN TO TURN 0.06600 INCH 0.16764 CM

LAYER TO LAYER : 0.04190 INCH 0.10643 CM

WNDING TENSION: 20 TO 25 LB.
66 TURN PER LAYER
56 LAYERS

REMARK :

LAYER #	# Turn /Layer	Length per Layer (FEET)	INC/LAYE (FEET)	ACCUM/L (FEET)	FINISHED O. D. (INCH)	SUPPLY FOOTAGE	LEFTOVER FOOTAGE	DATE: COMMENT	Q. C. ACTUAL TURN	Q. C. FINISHED O. D. (IN.)	REMARK SHORT CHECKING
PREPARATION MEASUREMENT: COIL STARTING DIA. (IN INCH) :									———		
				SPOOL BILLET #:		36680	24255	METER	(LEFTOVER FROM	UNIT #1 MATCH 1)	
1	66	351.02	1.4480	352	20.3988	79556	79204				
2	66	352.46	1.4480	705	20.4826	(LIST FT)	78851				
3	66	353.91	1.4480	1059	20.5664		78498				
4	66	355.36	1.4480	1414	20.6502		78142				
5	66	356.81	1.4480	1771	20.7340		77785				
6	66	358.26	1.4480	2129	20.8178		77427				
7	66	359.70	1.4480	2489	20.9016		77067				
8	66	361.15	1.4480	2850	20.9854		76706				
9	66	362.60	1.4480	3213	21.0692		76344				
10	66	364.05	1.4480	3577	21.1530		75980				
11	66	365.50	1.4480	3942	21.2368		75614				
12	66	366.94	1.4480	4309	21.3206		75247				
13	66	368.39	1.4480	4678	21.4044		74879				
14	66	369.84	1.4480	5047	21.4882		74509				
15	66	371.29	1.4480	5419	21.5720		74138				
16	66	372.74	1.4480	5791	21.6558		73765				
17	66	374.18	1.4480	6166	21.7396		73391				
18	66	375.63	1.4480	6541	21.8234		73015				

Proprietary

COIL WINDING INSTRUCTION- MICE MAGNET

LAYER #	# Turn /Layer	Length per Layer (FEET)	INC/LAYE (FEET)	ACCUM/L (FEET)	FINISHED O. D. (INCH)	SUPPLY FOOTAGE	LEFTOVER FOOTAGE	DATE: COMMENT	Q. C. ACTUAL TURN	Q. C. FINISHED O. D. (IN.)	REMARK SHORT CHECKING
19	66	377.08	1.4480	6918	21.9072	73015	72638				
20	66	378.53	1.4480	7297	21.9910		72260				
21	66	379.98	1.4480	7677	22.0748		71880				
22	66	381.42	1.4480	8058	22.1586		71498				
23	66	382.87	1.4480	8441	22.2424		71115				
24	66	384.32	1.4480	8825	22.3262		70731				
25	66	385.77	1.4480	9211	22.4100		70345				
26	66	387.22	1.4480	9598	22.4938		69958				
27	66	388.66	1.4480	9987	22.5776		69569				
28	66	390.11	1.4480	10377	22.6614		69179				
29	66	391.56	1.4480	10769	22.7452		68788				
30	66	393.01	1.4480	11162	22.8290		68395				
31	66	394.46	1.4480	11556	22.9128		68000				
32	66	395.90	1.4480	11952	22.9966		67604				
33	66	397.35	1.4480	12350	23.0804		67207				
34	66	398.80	1.4480	12748	23.1642		66808				
35	66	400.25	1.4480	13149	23.2480		66408				
36	66	401.70	1.4480	13550	23.3318		66006				
37	66	403.14	1.4480	13953	23.4156		65603				
38	66	404.59	1.4480	14358	23.4994		65198				
39	66	406.04	1.4480	14764	23.5832		64792				
40	66	407.49	1.4480	15172	23.6670		64385				
41	66	408.94	1.4480	15580	23.7508		63976				
42	66	410.38	1.4480	15991	23.8346		63566				
43	66	411.83	1.4480	16403	23.9184		63154				
44	66	413.28	1.4480	16816	24.0022		62740				
45	66	414.73	1.4480	17231	24.0860		62326				
46	66	416.17	1.4480	17647	24.1698		61910				

Proprietary

COIL WINDING INSTRUCTION- MICE MAGNET

LAYER #	# Turn /Layer	Length per Layer (FEET)	INC/LAYE (FEET)	ACCUM/L (FEET)	FINISHED O. D. (INCH)	SUPPLY FOOTAGE	LEFTOVER FOOTAGE	DATE: COMMENT	Q. C. ACTUAL TURN	Q. C. FINISHED O. D. (IN.)
47	66	417.62	1.4480	18064	24.2536		61492			
48	66	419.07	1.4480	18484	24.3374		61073			
[illegible]	66	420.52	1.4480	18904	24.4212		60652			
[illegible]	66	421.97	1.4480	19326	24.5050		60230			
51	66	423.41	1.4480	19749	24.5888		59807			
52	66	424.86	1.4480	20174	24.6726		59382			
53	66	426.31	1.4480	20601	24.7564		58956			
54	66	427.76	1.4480	21028	24.8402		58528			
55	66	429.21	1.4480	21458	24.9240		58099			
56	66	430.65	1.4480	21888	25.0078		57668			
			LEAD OUT		(CONTINUED TO WIND UNIT #1 END COIL #2)					
									ACTUAL WINDING RAD.	
									I.D.=	

FINISH OUTER RADIAL.= 31.7599 CM

TOTAL TURNS = 3696

DESIGN TURNS 31.7599

CHECKING FINAL O.D. (IN INCHES)=

Proprietary

COIL WINDING INSTRUCTION- MICE MAGNET

COIL WINDING LOG

SUPERCONDUCTOR USAGE FOR :

PROJECT: MICE END COIL#2 MAGNET

DATE:
OPERATOR:

COIL # : END COIL#2 (unit #1)

NBTI CONDUCTOR

WIRE: 5 T at 872 A

PEAK FIELD : 6.37 T AT 265.2 A

LAYER TO LAYER INSULATION : 2.5 MIL FIBERGLASS

WINDING METHOD: WET WIND WITH STY

	Z1	Z2 (WARM DIMENSION)
Z(CM)	240.8679	251.9321
R(CM)	25.8000	32.3984
COIL DIA. (IN INCH):	**20.3150**	**25.5106**
	(I.D)	**(O.D.)** (JUNE 23, 06)

	width	thick	SP =
retangular condutor :	1.6460	0.9960 (MM)	

CONDUCTOR DIMENSION (IN CM): 0.167640 0.106426

TURN TO TURN 0.06600 INCH 0.16764 CM

LAYER TO LAYER : 0.04190 INCH 0.10643 CM

WNDING TENSION: 20 TO 25 LB.
66 TURN PER LAYER
62 LAYERS

REMARK :

PREPARATION MEASUREMENT: COIL STARTING DIA. (IN INCH) : _____

LAYER #	# Turn /Layer	Length per Layer (FEET)	INC/LAYE (FEET)	ACCUM/L (FEET)	FINISHED O. D. (INCH)	SUPPLY FOOTAGE	LEFTOVER FOOTAGE	DATE: COMMENT	Q. C. ACTUAL TURN	Q. C. FINISHED O. D. (IN.)	REMARK SHORT CHECKING
				SPOOL BILLET #:		**36680**	**17560**	**METER**	(LEFTOVER FROM END#1, UNIT1)		
1	66	351.02	1.4480	352	20.3988	57597	57244				
2	66	352.46	1.4480	705	20.4826	(LIST FT)	56892				
3	66	353.91	1.4480	1059	20.5664		56538				
4	66	355.36	1.4480	1414	20.6502		56183				
5	66	356.81	1.4480	1771	20.7340		55826				
6	66	358.26	1.4480	2129	20.8178		55468				
7	66	359.70	1.4480	2489	20.9016		55108				
8	66	361.15	1.4480	2850	20.9854		54747				
9	66	362.60	1.4480	3213	21.0692		54384				
10	66	364.05	1.4480	3577	21.1530		54020				
11	66	365.50	1.4480	3942	21.2368		53655				
12	66	366.94	1.4480	4309	21.3206		53288				
13	66	368.39	1.4480	4678	21.4044		52919				
14	66	369.84	1.4480	5047	21.4882		52549				
15	66	371.29	1.4480	5419	21.5720		52178				
16	66	372.74	1.4480	5791	21.6558		51805				
17	66	374.18	1.4480	6166	21.7396		51431				
18	66	375.63	1.4480	6541	21.8234		51056				

Proprietary

COIL WINDING INSTRUCTION- MICE MAGNET

LAYER #	# Turn /Layer	Length per Layer (FEET)	INC/LAYE (FEET)	ACCUM/L (FEET)	FINISHED O. D. (INCH)	SUPPLY FOOTAGE	LEFTOVER FOOTAGE	DATE: COMMENT	Q. C. ACTUAL TURN	FINISHED O. D. (IN.)	REMARK SHORT CHECKING
19	66	377.08	1.4480	6918	21.9072	51056	50678				
20	66	378.53	1.4480	7297	21.9910		50300				
21	66	379.98	1.4480	7677	22.0748		49920				
22	66	381.42	1.4480	8058	22.1586		49539				
23	66	382.87	1.4480	8441	22.2424		49156				
24	66	384.32	1.4480	8825	22.3262		48771				
25	66	385.77	1.4480	9211	22.4100		48386				
26	66	387.22	1.4480	9598	22.4938		47998				
27	66	388.66	1.4480	9987	22.5776		47610				
28	66	390.11	1.4480	10377	22.6614		47220				
29	66	391.56	1.4480	10769	22.7452		46828				
30	66	393.01	1.4480	11162	22.8290		46435				
31	66	394.46	1.4480	11556	22.9128		46041				
32	66	395.90	1.4480	11952	22.9966		45645				
33	66	397.35	1.4480	12350	23.0804		45247				
34	66	398.80	1.4480	12748	23.1642		44848				
35	66	400.25	1.4480	13149	23.2480		44448				
36	66	401.70	1.4480	13550	23.3318		44047				
37	66	403.14	1.4480	13953	23.4156		43643				
38	66	404.59	1.4480	14358	23.4994		43239				
39	66	406.04	1.4480	14764	23.5832		42833				
40	66	407.49	1.4480	15172	23.6670		42425				
41	66	408.94	1.4480	15580	23.7508		42016				
42	66	410.38	1.4480	15991	23.8346		41606				
43	66	411.83	1.4480	16403	23.9184		41194				
44	66	413.28	1.4480	16816	24.0022		40781				
45	66	414.73	1.4480	17231	24.0860		40366				
46	66	416.17	1.4480	17647	24.1698		39950				

Proprietary

COIL WINDING INSTRUCTION- MICE MAGNET

LAYER #	# Turn /Layer	Length per Layer (FEET)	INC/LAYE (FEET)	ACCUM/L (FEET)	FINISHED O. D. (INCH)	SUPPLY FOOTAGE	LEFTOVER FOOTAGE	DATE: COMMENT	Q. C. ACTUAL TURN	FINISHED O. D. (IN.)
47	66	417.62	1.4480	18064	24.2536		39532			
48	66	419.07	1.4480	18484	24.3374		39113			
49	66	420.52	1.4480	18904	24.4212		38693			
50	66	421.97	1.4480	19326	24.5050		38271			
51	66	423.41	1.4480	19749	24.5888		37847			
52	66	424.86	1.4480	20174	24.6726		37422			
53	66	426.31	1.4480	20601	24.7564		36996			
54	66	427.76	1.4480	21028	24.8402		36568			
55	66	429.21	1.4480	21458	24.9240		36139			
56	66	430.65	1.4480	21888	25.0078		35709			
57	66	432.10	1.4480	22320	25.0916		35276			
58	66	433.55	1.4480	22754	25.1754		34843			
59	66	435.00	1.4480	23189	25.2592		34408			
60	66	436.45	1.4480	23625	25.3430		33971			
61	66	437.89	1.4480	24063	25.4268		33534			
62	66	439.34	1.4480	24503	25.5106		33094		(THE LEFTOVER APPROX.10065 METER,	
									WILL WIND UNIT#2 MATCH#1 COIL)	
			LEAD OUT							
									ACTUAL WINDING RAD.	
									I.D.=	
									CHECKING FINAL O.D. (IN INCHES)=	

FINISH OUTER RADIAL.= 32.3984 CM

TOTAL TURNS = 4092

DESIGN TURNS 32.3984

Proprietary

APPENDIX II-9-2

UNIT 2 – Winding Instructions

For MICE Spectrometer Solenoid Magnets

Wang NMR, Inc.

550 North Canyons Parkway , Livermore, Ca. 94551

Proprietary

COIL WINDING INSTRUCTION- MICE MAGNET

COIL WINDING LOG

SUPERCONDUCTOR USAGE FOR :

PROJECT: MICE TRACKER MATCH1 MAGNET

DATE:
OPERATOR:

COIL # : MATCH 1 (UNIT #2)

NBTI CONDUCTOR

WIRE: 5 T at 868 A

PEAK FIELD : 4.43 T AT 214.2 A

LAYER TO LAYER INSULATION : 2.5 MIL FIBERGLASS

WINDING METHOD: WET WIND WITH STY width thick SP = 56.0499

retangular condutor : 1.6460 0.9960 (MM)

WINDING DIMENSION (IN CM): 0.16764 0.10643

TURN TO TURN 0.06600 INCH 0.16764 CM

LAYER TO LAYER : 0.04190 INCH 0.10643 CM

	Z1	Z2
Z(CM)	2.3416	22.4584
R(CM)	25.8000	30.2699
COIL DIA. (IN INCH):	**20.3150**	**23.8346**
	(I.D)	**(O.D.)**

(JUNE 28, 06)

WNDING TENSION: 20 TO 25 LB.
120 TURN PER LAYER
42 LAYERS

REMARK :

PREPARATION MEASUREMENT: COIL STARTING DIA. (IN INCH) : _____

LAYER #	# Turn /Layer	Length per Layer (FEET)	INC/LAYE (FEET)	ACCUM/L (FEET)	FINISHED O. D. (INCH)	SUPPLY FOOTAGE	LEFTOVER FOOTAGE	DATE: COMMENT	Q. C. ACTUAL TURN	FINISHED O. D. (IN.)	REMARK SHORT CHECKING
				SPOOL BILLET #:		**36680**	**10065**	**METER**	**(LEFTOVER FROM Unit #1, Match1, End1 and End2,**		
1	120	638.21	2.6327	641	20.3988	33013	32372		**Then Unit#2 Match 1)**		
2	120	640.85	2.6327	1282	20.4826	(LIST FT)	31732				
3	120	643.48	2.6327	1925	20.5664		31088				
4	120	646.11	2.6327	2571	20.6502		30442				
5	120	648.75	2.6327	3220	20.7340		29793				
6	120	651.38	2.6327	3871	20.8178		29142				
7	120	654.01	2.6327	4525	20.9016		28488				
8	120	656.64	2.6327	5182	20.9854		27831				
9	120	659.28	2.6327	5841	21.0692		27172				
10	120	661.91	2.6327	6503	21.1530		26510				
11	120	664.54	2.6327	7168	21.2368		25845				
12	120	667.17	2.6327	7835	21.3206		25178				
13	120	669.81	2.6327	8505	21.4044		24508				
14	120	672.44	2.6327	9177	21.4882		23836				
15	120	675.07	2.6327	9852	21.5720		23161				
16	120	677.70	2.6327	10530	21.6558		22483				
17	120	680.34	2.6327	11210	21.7396		21803				
18	120	682.97	2.6327	11893	21.8234		21120				

Proprietary

COIL WINDING INSTRUCTION- MICE MAGNET

LAYER #	# Turn /Layer	Length per Layer (FEET)	INC/LAYE (FEET)	ACCUM/L (FEET)	FINISHED O. D. (INCH)	SUPPLY FOOTAGE	LEFTOVER FOOTAGE	DATE: COMMENT	Q. C. ACTUAL TURN	Q. C. FINISHED O. D. (IN.)	REMARK SHORT CHECKING
19	120	685.60	2.6327	12579	21.9072	21120	20434				
20	120	688.24	2.6327	13267	21.9910		19746				
21	120	690.87	2.6327	13958	22.0748		19055				
22	120	693.50	2.6327	14652	22.1586		18362				
23	120	696.13	2.6327	15348	22.2424		17666				
24	120	698.77	2.6327	16046	22.3262		16967				
25	120	701.40	2.6327	16748	22.4100		16265				
26	120	704.03	2.6327	17452	22.4938		15561				
27	120	706.66	2.6327	18158	22.5776		14855				
28	120	709.30	2.6327	18868	22.6614		14145				
29	120	711.93	2.6327	19580	22.7452		13433				
30	120	714.56	2.6327	20294	22.8290		12719				
31	120	717.19	2.6327	21011	22.9128		12002				
32	120	719.83	2.6327	21731	22.9966		11282				
33	120	722.46	2.6327	22454	23.0804		10559				
34	120	725.09	2.6327	23179	23.1642		9834				
35	120	727.73	2.6327	23907	23.2480		9107				
36	120	730.36	2.6327	24637	23.3318		8376				
37	120	732.99	2.6327	25370	23.4156		7643				
38	120	735.62	2.6327	26106	23.4994		6908				
39	120	738.26	2.6327	26844	23.5832		6169				
40	120	740.89	2.6327	27585	23.6670		5428				
41	120	743.52	2.6327	28328	23.7508		4685				
42	120	746.15	2.6327	29074	23.8346		3939				
								(THE END, STORAGE THE WIRE)			
			LEAD OUT (lead wire both in and out reserved15 ft)								
									ACTUAL WINDING RAD.		
									I.D.=		
				FINISH OUTER RADIAL.=		**30.2699 CM**		**DESIGN**	**30.2699**	**CHECKING FINAL O.D.**	
				TOTAL TURNS =		**5040**		**TURNS**		**(IN INCHES)=**	

Proprietary

COIL WINDING INSTRUCTION- MICE MAGNET

COIL WINDING LOG

SUPERCONDUCTOR USAGE FOR :

PROJECT: MICE MATCH2 MAGNET

DATE:
OPERATOR:

COIL # : MATCH 2 (UNIT #2)

NBTI CONDUCTOR

WIRE: 5 T at 872 A

PEAK FIELD : 4.01T AT 251.8 A

LAYER TO LAYER INSULATION : 2.5 MIL FIBERGLASS

WINDING METHOD: WET WIND WITH STY width thick SP = 56.0499

retangular condutor : 1.6460 0.9960 (MM)

CONDUCTOR DIMENSION (IN CM): 0.167640 0.106426

TURN TO TURN 0.06600 INCH 0.16764 CM

LAYER TO LAYER : 0.04190 INCH 0.10643 CM

	Z1	Z2
Z(CM)	46.4254	66.3746
R(CM)	25.8000	28.7799
COIL DIA. (IN INCH):	**20.3150**	**22.6613**
	(I.D)	**(O.D.)**

(JUNE 28, 06)

WNDING TENSION: 20 TO 25 LB.
119 TURN PER LAYER
28 LAYERS

REMARK :

LAYER #	# Turn /Layer	Length per Layer (FEET)	INC/LAYE (FEET)	ACCUM/L (FEET)	FINISHED O. D. (INCH)	SUPPLY FOOTAGE	LEFTOVER FOOTAGE	DATE: COMMENT	Q. C. ACTUAL TURN	FINISHED O. D. (IN.)	REMARK SHORT CHECKING
PREPARATION MEASUREMENT: COIL STARTING DIA. (IN INCH) : _____											
				SPOOL BILLET #:		36760-1-2	7440	METER			
1	119	632.90	2.6107	636	20.3988	24403	23768				
2	119	635.51	2.6107	1271	20.4826	(LIST FT)	23132				
3	119	638.12	2.6107	1909	20.5664		22494				
4	119	640.73	2.6107	2550	20.6502		21853				
5	119	643.34	2.6107	3193	20.7340		21210				
6	119	645.95	2.6107	3839	20.8178		20564				
7	119	648.56	2.6107	4488	20.9016		19915				
8	119	651.17	2.6107	5139	20.9854		19264				
9	119	653.78	2.6107	5793	21.0692		18611				
10	119	656.39	2.6107	6449	21.1530		17954				
11	119	659.00	2.6107	7108	21.2368		17295				
12	119	661.62	2.6107	7770	21.3206		16634				
13	119	664.23	2.6107	8434	21.4044		15969				
14	119	666.84	2.6107	9101	21.4882		15302				
15	119	669.45	2.6107	9770	21.5720		14633				
16	119	672.06	2.6107	10442	21.6558		13961				
17	119	674.67	2.6107	11117	21.7396		13286				
18	119	677.28	2.6107	11794	21.8234		12609				

Proprietary

COIL WINDING INSTRUCTION- MICE MAGNET

LAYER #	# Turn /Layer	Length per Layer (FEET)	INC/LAYE (FEET)	ACCUM/L (FEET)	FINISHED O. D. (INCH)	SUPPLY FOOTAGE	LEFTOVER FOOTAGE	DATE: COMMENT	Q. C. ACTUAL TURN	Q. C. FINISHED O. D. (IN.)	REMARK SHORT CHECKING
19	119	679.89	2.6107	12474	21.9072	12609	11929				
20	119	682.50	2.6107	13157	21.9910		11247				
21	119	685.11	2.6107	13842	22.0748		10561				
22	119	687.72	2.6107	14529	22.1586		9874				
23	119	690.33	2.6107	15220	22.2424		9183				
24	119	692.94	2.6107	15913	22.3262		8490				
25	119	695.56	2.6107	16608	22.4100		7795				
26	119	698.17	2.6107	17306	22.4938		7097				
27	119	700.78	2.6107	18007	22.5776		6396				
28	119	703.39	2.6107	18711	22.6614		5693		(THE END, STORAGE)		
			LEAD OUT								
									ACTUAL WINDING RAD.		
									I.D.=		
					FINISH OUTER RADIAL.=		28.7799 CM	DESIGN	28.7799	CHECKING FINAL O.D.	
					TOTAL TURNS =		3332	TURNS		(IN INCHES)=	

Proprietary

COIL WINDING INSTRUCTION- MICE MAGNET

COIL WINDING LOG

SUPERCONDUCTOR USAGE FOR :

PROJECT: MICE CENTRE MAGNET

DATE:
OPERATOR:

COIL # : CENTER (UNIT#2)

NBTI CONDUCTOR

WIRE: 5 T at 872 A

PEAK FIELD : 4.19 T AT 265.9 A

LAYER TO LAYER INSULATION : 2.5 MIL FIBERGLASS

WINDING METHOD: WET WIND WITH STY width thick SP =

retangular condutor : 1.6460 0.9960 (MM)

CONDUCTOR DIMENSION (IN CM): 0.167640 0.106426

TURN TO TURN 0.06600 INCH 0.16764 CM

LAYER TO LAYER : 0.04190 INCH 0.10643 CM

	Z1	Z2 (WARM DIMENSION)
Z(CM)	105.6851	237.1149
R(CM)	25.8000	27.9285
COIL DIA. (IN INCH):	**20.3150**	**21.9909**
	(I.D)	**(O.D.)** (JUNE 28, 06)

WNDING TENSION: 20 TO 25 LB.
784 TURN PER LAYER
20 LAYERS

REMARK :

LAYER #	# Turn /Layer	Length per Layer (FEET)	INC/LAYE (FEET)	ACCUM/L (FEET)	FINISHED O. D. (INCH)	SUPPLY FOOTAGE	LEFTOVER FOOTAGE	DATE: COMMENT	Q. C. ACTUAL TURN	FINISHED O. D. (IN.)	REMARK SHORT CHECKING
PREPARATION MEASUREMENT: COIL STARTING DIA. (IN INCH) : _____											
				SPOOL BILLET #:		36761-1	27363	METER			
1	784	4169.67	17.2001	4187	20.3988	89751	85564				
2	784	4186.87	17.2001	8374	20.4826	(LIST FT)	81377				
3	784	4204.07	17.2001	12578	20.5664		77173				
4	784	4221.27	17.2001	16799	20.6502		72952				
5	784	4238.47	17.2001	21038	20.7340		68713				
6	784	4255.67	17.2001	25293	20.8178		64457				
7	784	4272.87	17.2001	29566	20.9016		60185				
8	784	4290.07	17.2001	33856	20.9854		55894				
9	784	4307.27	17.2001	38163	21.0692		51587				
10	784	4324.47	17.2001	42488	21.1530		47263		LEAD IN AND OUT FOR MAGNET PROTECTION		
11	784	4341.67	17.2001	46830	21.2368		42921		(DON'T CUT THE CONDUCTOR)		
12	784	4358.87	17.2001	51188	21.3206		38562				
13	784	4376.07	17.2001	55565	21.4044		34186				
14	784	4393.27	17.2001	59958	21.4882		29793				
15	784	4410.47	17.2001	64368	21.5720		25382				
16	784	4427.67	17.2001	68796	21.6558		20955				
17	784	4444.87	17.2001	73241	21.7396		16510				
18	784	4462.07	17.2001	77703	21.8234		12048				

Proprietary

COIL WINDING INSTRUCTION- MICE MAGNET

LAYER #	# Turn /Layer	Length per Layer (FEET)	INC/LAYE (FEET)	ACCUM/L (FEET)	FINISHED O. D. (INCH)	SUPPLY FOOTAGE	LEFTOVER FOOTAGE	DATE: COMMENT	Q. C. ACTUAL TURN	Q. C. FINISHED O. D. (IN.)	REMARK SHORT CHECKING
19	784	4479.27	17.2001	82182	21.9072	12048	7568				
0	784	4496.47	17.2001	86679	21.9910		3072		(THE END, STORAGE)		
			LEAD OUT								
									ACTUAL WINDING RAD.		
									I.D.=		
									CHECKING FINAL O.D. (IN INCHES)=		

FINISH OUTER RADIAL.= 27.9285 CM

TOTAL TURNS = 15680

DESIGN TURNS 27.9285

Proprietary

COIL WINDING INSTRUCTION- MICE MAGNET

COIL WINDING LOG

SUPERCONDUCTOR USAGE FOR :

PROJECT: MICE END COIL#1 MAGNET

DATE:
OPERATOR:

COIL # : END COIL#1 (UNIT #2)

NBTI CONDUCTOR

WIRE: 5 T at 872 A

PEAK FIELD : 5.90 T AT 249.5 A

LAYER TO LAYER INSULATION : 2.5 MIL FIBERGLASS

WINDING METHOD: WET WIND WITH STY

	Z1	Z2 (WARM DIMENSION)
Z(CM)	90.8679	101.9321
R(CM)	25.8	31.7599
COIL DIA. (IN INCH):	**20.3150**	**25.0078**
	(I.D)	**(O.D.)** (JUNE 30, 06)

	width	thick	SP =
retangular condutor :	1.6460	0.9960 (MM)	
CONDUCTOR DIMENSION (IN CM):	0.167640	0.106426	
TURN TO TURN 0.06600 INCH	0.16764 CM		
LAYER TO LAYER : 0.04190 INCH	0.10643 CM		

WNDING TENSION: 20 TO 25 LB.
66 TURN PER LAYER
56 LAYERS

REMARK :

LAYER #	# Turn /Layer	Length per Layer (FEET)	INC/LAYE (FEET)	ACCUM/L (FEET)	FINISHED O. D. (INCH)	SUPPLY FOOTAGE	LEFTOVER FOOTAGE	DATE: COMMENT	*Q. C.* ACTUAL TURN	FINISHED O. D. (IN.)	REMARK SHORT CHECKING
PREPARATION MEASUREMENT: COIL STARTING DIA. (IN INCH) :									_____		
				SPOOL BILLET #:		36760-1-1	15218	METER	(SPOOL 36760-1-1WIND BOTH END 1		
1	66	351.02	1.4480	352	20.3988	49915	49563		AND END 2 OF UNIT #2)		
2	66	352.46	1.4480	705	20.4826	(LIST FT)	49210				
3	66	353.91	1.4480	1059	20.5664		48856				
4	66	355.36	1.4480	1414	20.6502		48501				
5	66	356.81	1.4480	1771	20.7340		48144				
6	66	358.26	1.4480	2129	20.8178		47786				
7	66	359.70	1.4480	2489	20.9016		47426				
8	66	361.15	1.4480	2850	20.9854		47065				
9	66	362.60	1.4480	3213	21.0692		46702				
10	66	364.05	1.4480	3577	21.1530		46338				
11	66	365.50	1.4480	3942	21.2368		45973				
12	66	366.94	1.4480	4309	21.3206		45606				
13	66	368.39	1.4480	4678	21.4044		45237				
14	66	369.84	1.4480	5047	21.4882		44868				
15	66	371.29	1.4480	5419	21.5720		44496				
16	66	372.74	1.4480	5791	21.6558		44124				
17	66	374.18	1.4480	6166	21.7396		43749				
18	66	375.63	1.4480	6541	21.8234		43374				

Proprietary

COIL WINDING INSTRUCTION- MICE MAGNET

LAYER #	# Turn /Layer	Length per Layer (FEET)	INC/LAYE (FEET)	ACCUM/L (FEET)	FINISHED O. D. (INCH)	SUPPLY FOOTAGE	LEFTOVER FOOTAGE	DATE: COMMENT	Q. C. ACTUAL TURN	Q. C. FINISHED O. D. (IN.)	REMARK SHORT CHECKING
19	66	377.08	1.4480	6918	21.9072	43374	42997				
20	66	378.53	1.4480	7297	21.9910		42618				
21	66	379.98	1.4480	7677	22.0748		42238				
22	66	381.42	1.4480	8058	22.1586		41857				
23	66	382.87	1.4480	8441	22.2424		41474				
24	66	384.32	1.4480	8825	22.3262		41090				
25	66	385.77	1.4480	9211	22.4100		40704				
26	66	387.22	1.4480	9598	22.4938		40317				
27	66	388.66	1.4480	9987	22.5776		39928				
28	66	390.11	1.4480	10377	22.6614		39538				
29	66	391.56	1.4480	10769	22.7452		39146				
30	66	393.01	1.4480	11162	22.8290		38753				
31	66	394.46	1.4480	11556	22.9128		38359				
32	66	395.90	1.4480	11952	22.9966		37963				
33	66	397.35	1.4480	12350	23.0804		37566				
34	66	398.80	1.4480	12748	23.1642		37167				
35	66	400.25	1.4480	13149	23.2480		36766				
36	66	401.70	1.4480	13550	23.3318		36365				
37	66	403.14	1.4480	13953	23.4156		35962				
38	66	404.59	1.4480	14358	23.4994		35557				
39	66	406.04	1.4480	14764	23.5832		35151				
40	66	407.49	1.4480	15172	23.6670		34744				
41	66	408.94	1.4480	15580	23.7508		34335				
42	66	410.38	1.4480	15991	23.8346		33924				
43	66	411.83	1.4480	16403	23.9184		33512				
44	66	413.28	1.4480	16816	24.0022		33099				
45	66	414.73	1.4480	17231	24.0860		32684				
46	66	416.17	1.4480	17647	24.1698		32268				

Proprietary

COIL WINDING INSTRUCTION- MICE MAGNET

LAYER #	# Turn /Layer	Length per Layer (FEET)	INC/LAYE (FEET)	ACCUM/L (FEET)	FINISHED O. D. (INCH)	SUPPLY FOOTAGE	LEFTOVER FOOTAGE	DATE: COMMENT	Q. C. ACTUAL TURN	FINISHED O. D. (IN.)
47	66	417.62	1.4480	18064	24.2536		31851			
48	66	419.07	1.4480	18484	24.3374		31431			
49	66	420.52	1.4480	18904	24.4212		31011			
50	66	421.97	1.4480	19326	24.5050		30589			
51	66	423.41	1.4480	19749	24.5888		30166			
52	66	424.86	1.4480	20174	24.6726		29741			
53	66	426.31	1.4480	20601	24.7564		29314			
54	66	427.76	1.4480	21028	24.8402		28887			
55	66	429.21	1.4480	21458	24.9240		28457			
56	66	430.65	1.4480	21888	25.0078		28027			
			LEAD OUT						(CONTINUED TO WIND UNIT #2 END COIL #2)	
									ACTUAL WINDING RAD.	
									I.D.=	
					FINISH OUTER RADIAL.=		31.7599 CM	DESIGN TURNS	31.7599	CHECKING FINAL O.D. (IN INCHES)=
					TOTAL TURNS =		3696			

Proprietary

COIL WINDING INSTRUCTION- MICE MAGNET

COIL WINDING LOG

SUPERCONDUCTOR USAGE FOR :

PROJECT: MICE END COIL#2 MAGNET

DATE:
OPERATOR:

COIL # : END COIL#2 (unit #2)

NBTI CONDUCTOR

WIRE: 5 T at 872 A

PEAK FIELD : 6.37 T AT 265.2 A

LAYER TO LAYER INSULATION : 2.5 MIL FIBERGLASS

WINDING METHOD: WET WIND WITH STY width thick SP =

retangular condutor : 1.6460 0.9960 (MM)

CONDUCTOR DIMENSION (IN CM): 0.167640 0.106426

TURN TO TURN 0.06600 INCH 0.16764 CM

LAYER TO LAYER : 0.04190 INCH 0.10643 CM

	Z1	Z2 (WARM DIMENSION)
Z(CM)	240.8679	251.9321
R(CM)	25.8000	32.3984
COIL DIA. (IN INCH):	**20.3150**	**25.5106**
	(I.D)	**(O.D.)** (JUNE 28, 06)

WNDING TENSION: 20 TO 25 LB.
66 TURN PER LAYER
62 LAYERS

REMARK :

LAYER #	# Turn /Layer	Length per Layer (FEET)	INC/LAYE (FEET)	ACCUM/L (FEET)	FINISHED O. D. (INCH)	SUPPLY FOOTAGE	LEFTOVER FOOTAGE	DATE: COMMENT	Q. C. ACTUAL TURN	Q. C. FINISHED O. D. (IN.)	REMARK SHORT CHECKING
PREPARATION MEASUREMENT: COIL STARTING DIA. (IN INCH) :									_____		
				SPOOL BILLET #:	36760-1-1		8524	METER	(LEFTOVER FROM END#1, UNIT#2)		
1	66	351.02	1.4480	352	20.3988	27959	27606				
2	66	352.46	1.4480	705	20.4826	(LIST FT)	27254				
3	66	353.91	1.4480	1059	20.5664		26900				
4	66	355.36	1.4480	1414	20.6502		26545				
5	66	356.81	1.4480	1771	20.7340		26188				
6	66	358.26	1.4480	2129	20.8178		25829				
7	66	359.70	1.4480	2489	20.9016		25470				
8	66	361.15	1.4480	2850	20.9854		25109				
9	66	362.60	1.4480	3213	21.0692		24746				
10	66	364.05	1.4480	3577	21.1530		24382				
11	66	365.50	1.4480	3942	21.2368		24016				
12	66	366.94	1.4480	4309	21.3206		23650				
13	66	368.39	1.4480	4678	21.4044		23281				
14	66	369.84	1.4480	5047	21.4882		22911				
15	66	371.29	1.4480	5419	21.5720		22540				
16	66	372.74	1.4480	5791	21.6558		22167				
17	66	374.18	1.4480	6166	21.7396		21793				
18	66	375.63	1.4480	6541	21.8234		21417				

Proprietary

COIL WINDING INSTRUCTION- MICE MAGNET

LAYER #	# Turn /Layer	Length per Layer (FEET)	INC/LAYE (FEET)	ACCUM/L (FEET)	FINISHED O. D. (INCH)	SUPPLY FOOTAGE	LEFTOVER FOOTAGE	DATE: COMMENT	Q. C. ACTUAL TURN	Q. C. FINISHED O. D. (IN.)	REMARK SHORT CHECKING
19	66	377.08	1.4480	6918	21.9072	21417	21040				
20	66	378.53	1.4480	7297	21.9910		20662				
21	66	379.98	1.4480	7677	22.0748		20282				
22	66	381.42	1.4480	8058	22.1586		19900				
23	66	382.87	1.4480	8441	22.2424		19518				
24	66	384.32	1.4480	8825	22.3262		19133				
25	66	385.77	1.4480	9211	22.4100		18747				
26	66	387.22	1.4480	9598	22.4938		18360				
27	66	388.66	1.4480	9987	22.5776		17972				
28	66	390.11	1.4480	10377	22.6614		17581				
29	66	391.56	1.4480	10769	22.7452		17190				
30	66	393.01	1.4480	11162	22.8290		16797				
31	66	394.46	1.4480	11556	22.9128		16402				
32	66	395.90	1.4480	11952	22.9966		16007				
33	66	397.35	1.4480	12350	23.0804		15609				
34	66	398.80	1.4480	12748	23.1642		15210				
35	66	400.25	1.4480	13149	23.2480		14810				
36	66	401.70	1.4480	13550	23.3318		14408				
37	66	403.14	1.4480	13953	23.4156		14005				
38	66	404.59	1.4480	14358	23.4994		13601				
39	66	406.04	1.4480	14764	23.5832		13195				
40	66	407.49	1.4480	15172	23.6670		12787				
41	66	408.94	1.4480	15580	23.7508		12378				
42	66	410.38	1.4480	15991	23.8346		11968				
43	66	411.83	1.4480	16403	23.9184		11556				
44	66	413.28	1.4480	16816	24.0022		11143				
45	66	414.73	1.4480	17231	24.0860		10728				
46	66	416.17	1.4480	17647	24.1698		10312				

Proprietary

COIL WINDING INSTRUCTION- MICE MAGNET

LAYER #	# Turn /Layer	Length per Layer (FEET)	INC/LAYE (FEET)	ACCUM/L (FEET)	FINISHED O. D. (INCH)	SUPPLY FOOTAGE	LEFTOVER FOOTAGE	DATE: COMMENT	Q. C. ACTUAL TURN	FINISHED O. D. (IN.)
47	66	417.62	1.4480	18064	24.2536		9894			
48	66	419.07	1.4480	18484	24.3374		9475			
49	66	420.52	1.4480	18904	24.4212		9055			
50	66	421.97	1.4480	19326	24.5050		8633			
51	66	423.41	1.4480	19749	24.5888		8209			
52	66	424.86	1.4480	20174	24.6726		7784			
53	66	426.31	1.4480	20601	24.7564		7358			
54	66	427.76	1.4480	21028	24.8402		6930			
55	66	429.21	1.4480	21458	24.9240		6501			
56	66	430.65	1.4480	21888	25.0078		6070			
57	66	432.10	1.4480	22320	25.0916		5638			
58	66	433.55	1.4480	22754	25.1754		5205			
59	66	435.00	1.4480	23189	25.2592		4770			
60	66	436.45	1.4480	23625	25.3430		4333			
61	66	437.89	1.4480	24063	25.4268		3895			
62	66	439.34	1.4480	24503	25.5106		3456		(THE END, STORAGE)	
			LEAD OUT							
									ACTUAL WINDING RAD.	
									J.D.=	
			FINISH OUTER RADIAL.=		32.3984 CM		DESIGN	32.3984	CHECKING FINAL O.D.	
				TOTAL TURNS =		4092	TURNS		(IN INCHES)=	

Proprietary

APPENDIX II-15-1

Analysis of Quench M1 Coil

For MICE Spectrometer Solenoid Magnets

Wang NMR, Inc.

550 North Canyons Parkway , Livermore, Ca. 94551

Proprietary

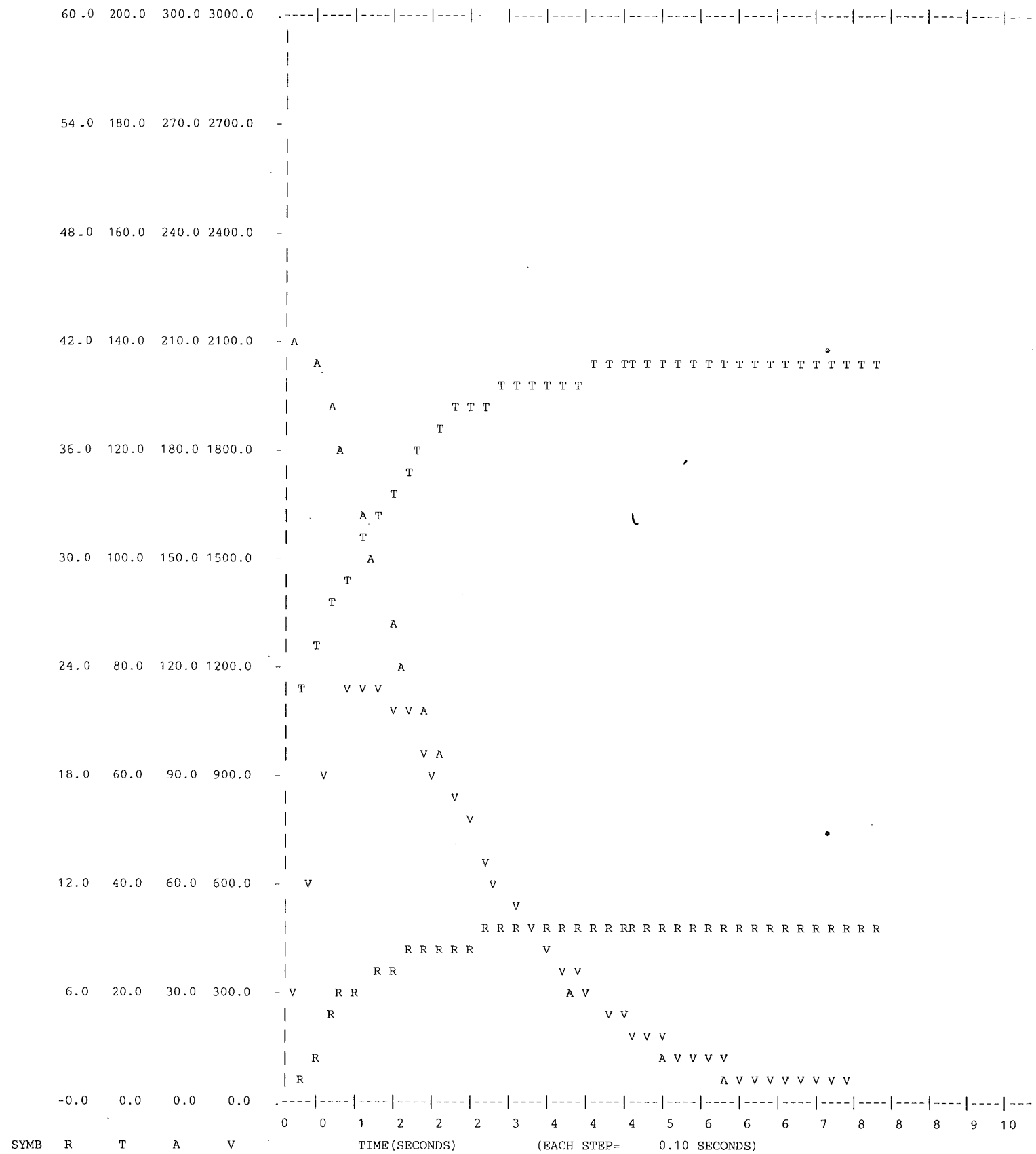

Proprietary

QATCH1, QUENCH SIMULATION FOR MICE MATCH1 MAGNET, JULY 07, 2006
(FILD=DRHOC*AMP effective)

COMPONENT PROPERTIES

COMPONENT : 99.999 COPPER DRHOC : 4.55E-12

FRAC	THETA	A	AEX	B	BEX	C	CEX	D	DEX
0.8000	0.00	12.0000E-09	0.0000	11.8000E-14	3.2500	71.0000E-07	3.0290	0.0000E+00	0.0000
0.8000	40.00	14.1000E-13	2.7100	0.0000E+00	0.0000	83.4000E-05	1.7400	0.0000E+00	0.0000
0.8000	80.00	46.7000E-11	1.4500	0.0000E+00	0.0000	26.3600E-02	0.4235	0.0000E+00	0.0000

CRIT. TEMP. AT 0 FIELD : 9.0 DEG. KELVIN [THMAX]
MAX. FIELD AT TEMP THET : 111.8 K GAUSS [BMAX]
PEAK FIELD ON CONDUCTOR : 44.30 KGAUSS [FIED]
UNIT CELL AREA (WITH AMPS AMPO) : 0.0178 cm^2 [AR]
INITIAL TEMP THET : 4.20 DEG. KELVIN [THET]

INITIAL CURRENT = 214.20 [AMPO]
INITIAL PROT.R. = 0.0100 [RPR]
GAMMA = 0.00 [GAM]
R. SWITCH = 1000000.00 [RSW]
COIL INDUCTANCE = 15.7160 [HEN]
COIL INIT RESIS = 0.0000 [RO]

INITIAL VELOCITY = 2436.80 [VO]
UNIT CELL AREA = 0.017842 [AR]
INITIAL TEMPERATURE = 4.2000 [THET]
ALPHA = 0.00020 [AL1]
INITIAL X. VELOCITY = 34.4615 [VOX]
EPSILON = 0.00020 [EPS1]
INITIAL Y. VELOCITY = 34.4615 [VOY]
X COIL DIMENSION = 4.47 [XLIM]
Y COIL DIMENSION = 162.11 [YLIM]
Z COIL DIMENSION = 20.12 [ZLIM]
COORD. OF SOURCE X = 2.23 [XO]
COORD. OF SOURCE Y = 81.05 [YO]
COORD. OF SOURCE Z = 10.06 [ZO]

BREAKER DELAY TIME = 0.00 [DTIM]
CONDUCTOR LENGTH = 816981.63 [CONDL]
COIL VOLUME = 14576.59 [VOLTRU]

XM :	0.00	0.00	0.00	0.00	4.47	4.47	4.47	4.47
YM :	0.00	0.00	162.11	162.11	0.00	0.00	162.11	162.11
ZM :	0.00	20.12	0.00	20.12	0.00	20.12	0.00	20.12

Proprietary

WANG NMR QUENCH SIMULATION: FILENAME= QMATCH1 07-07-2006 18:23:17

TIME TIM	CURRENT AMP	I/IO AMPF	COIL OHMS RT	DEL VOLUME VOL(I)	EXT.VOLT VOLT	DEL.INT.ENGY ER	INT.VOLT VINT	MAXTEMP THETA(1)	NORMFRAC VFRAC	VINDUC VINDUC	VUNBAL VUNBAL	POWER POWR	VELOC V
0.20	210.7	0.9837	0.1268E+01	0.1746E+04	2.1	0.1163E+05	271.6	77.4	0.1198	32.8	238.8	0.582E+05	1277. 1
0.40	203.1	0.9482	0.2828E+01	0.6054E+03	2.1	0.2511E+05	595.8	83.5	0.1613	96.5	499.3	0.126E+06	1257. 2
0.60	191.5	0.8941	0.4470E+01	0.3289E+03	2.0	0.3687E+05	907.8	90.5	0.1839	167.3	740.5	0.184E+06	1211. 5
0.80	177.1	0.8270	0.5885E+01	0.2996E+03	1.9	0.4317E+05	1127.1	97.3	0.2045	230.8	896.3	0.216E+06	1142. 5
1.00	162.6	0.7590	0.6454E+01	0.2738E+03	1.8	0.4051E+05	1143.3	103.5	0.2232	255.6	887.7	0.203E+06	1057. 5
1.20	148.1	0.6915	0.6975E+01	0.2499E+03	1.6	0.3687E+05	1134.0	109.0	0.2404	273.0	861.0	0.184E+06	970. 5
1.40	134.1	0.6260	0.7440E+01	0.2269E+03	1.5	0.3265E+05	1102.0	113.9	0.2559	282.4	819.6	0.163E+06	883. 5
1.60	120.7	0.5634	0.7845E+01	0.2050E+03	1.3	0.2821E+05	1051.8	118.0	0.2700	284.4	767.5	0.141E+06	800. 5
1.80	108.1	0.5046	0.8190E+01	0.1843E+03	1.2	0.2386E+05	988.4	121.4	0.2827	279.7	708.7	0.119E+06	720. 5
2.00	96.4	0.4501	0.8480E+01	0.1649E+03	1.1	0.1981E+05	916.5	124.2	0.2940	269.7	646.8	0.991E+05	645. 5
2.20	85.7	0.4001	0.8718E+01	0.1470E+03	1.0	0.1621E+05	840.5	126.5	0.3040	255.8	584.6	0.810E+05	575. 5
2.40	76.0	0.3547	0.8912E+01	0.1306E+03	0.9	0.1309E+05	763.7	128.4	0.3130	239.3	524.4	0.655E+05	511. 5
2.60	67.2	0.3137	0.9067E+01	0.1157E+03	0.8	0.1047E+05	688.9	129.9	0.3209	221.3	467.5	0.523E+05	453. 5
2.80	59.3	0.2770	0.9192E+01	0.1023E+03	0.7	0.8300E+04	617.6	131.0	0.3280	202.8	414.9	0.415E+05	401. 5
3.00	52.3	0.2442	0.9291E+01	0.9031E+02	0.6	0.6540E+04	551.2	131.9	0.3342	184.4	366.8	0.327E+05	354. 5
3.20	46.1	0.2150	0.9369E+01	0.7961E+02	0.5	0.5126E+04	490.0	132.7	0.3396	166.6	323.4	0.256E+05	312. 5
3.40	40.5	0.1892	0.9430E+01	0.7010E+02	0.5	0.4001E+04	434.4	133.2	0.3444	149.8	284.6	0.200E+05	275. 5
3.60	35.6	0.1664	0.9478E+01	0.6167E+02	0.4	0.3114E+04	384.1	133.7	0.3487	134.1	250.1	0.156E+05	242. 5
3.80	31.3	0.1462	0.9516E+01	0.5422E+02	0.4	0.2417E+04	339.1	134.0	0.3524	119.6	219.5	0.121E+05	213. 5
4.00	27.5	0.1284	0.9545E+01	0.4764E+02	0.3	0.1872E+04	298.9	134.3	0.3556	106.4	192.5	0.936E+04	187. 5
4.20	24.2	0.1128	0.9568E+01	0.4184E+02	0.3	0.1448E+04	263.2	134.5	0.3585	94.5	168.7	0.724E+04	164. 5
4.40	21.2	0.0990	0.9587E+01	0.3674E+02	0.2	0.1119E+04	231.6	134.6	0.3610	83.7	147.9	0.559E+04	144. 5
4.60	18.6	0.0869	0.9601E+01	0.3225E+02	0.2	0.8633E+03	203.6	134.7	0.3633	74.0	129.5	0.432E+04	126. 5
4.80	16.3	0.0762	0.9612E+01	0.2831E+02	0.2	0.6658E+03	178.9	134.8	0.3652	65.4	113.5	0.333E+04	111. 5
5.00	14.3	0.0669	0.9621E+01	0.2484E+02	0.2	0.5132E+03	157.1	134.9	0.3669	57.7	99.4	0.257E+04	97. 5
5.20	12.6	0.0587	0.9627E+01	0.2179E+02	0.1	0.3954E+03	138.0	135.0	0.3684	50.9	87.1	0.198E+04	85. 5
5.40	11.0	0.0515	0.9633E+01	0.1912E+02	0.1	0.3045E+03	121.1	135.0	0.3697	44.8	76.3	0.152E+04	75. 5
5.60	9.7	0.0452	0.9637E+01	0.1677E+02	0.1	0.2345E+03	106.3	135.0	0.3709	39.5	66.8	0.117E+04	66. 5
5.80	8.5	0.0396	0.9640E+01	0.1471E+02	0.1	0.1805E+03	93.3	135.1	0.3719	34.7	58.6	0.903E+03	58. 5
6.00	7.4	0.0348	0.9643E+01	0.1291E+02	0.1	0.1389E+03	81.8	135.1	0.3728	30.5	51.3	0.695E+03	51. 5
6.20	6.5	0.0305	0.9645E+01	0.1132E+02	0.1	0.1069E+03	71.8	135.1	0.3735	26.8	45.0	0.535E+03	44. 5
6.40	5.7	0.0267	0.9647E+01	0.9930E+01	0.1	0.8227E+02	63.0	135.1	0.3742	23.6	39.4	0.411E+03	39. 5
6.60	5.0	0.0235	0.9648E+01	0.8710E+01	0.1	0.6330E+02	55.3	135.1	0.3748	20.7	34.5	0.317E+03	34. 5
6.80	4.4	0.0206	0.9649E+01	0.7639E+01	0.1	0.4871E+02	48.5	135.1	0.3753	18.2	30.3	0.244E+03	30. 5
7.00	3.9	0.0180	0.9650E+01	0.6700E+01	0.0	0.3747E+02	42.5	135.1	0.3758	16.0	26.5	0.187E+03	26. 5
7.20	3.4	0.0158	0.9651E+01	0.5876E+01	0.0	0.2883E+02	37.3	135.1	0.3762	14.0	23.3	0.144E+03	23. 5
7.40	3.0	0.0139	0.9651E+01	0.5154E+01	0.0	0.2218E+02	32.7	135.1	0.3765	12.3	20.4	0.111E+03	20. 5
7.60	2.6	0.0122	0.9652E+01	0.4520E+01	0.0	0.1706E+02	28.7	135.1	0.3769	10.8	17.9	0.853E+02	18. 5
7.80	2.3	0.0107	0.9652E+01	0.3964E+01	0.0	0.1312E+02	25.2	135.1	0.3771	9.5	15.7	0.656E+02	16. 5

TOTAL INTERNAL ENERGY = 0.3761E+06 TOTAL SWITCH ENERGY = 0.6693E-05 TOTAL EXT. ENERGY = 0.6693E+03

FRACTION OF ENERGY DUMPED IN HE = 0.998224 INTEGRAL CURRENT SQUARED DT = 0.6693E+05

MAX TEMPERATURE RISE = 135.13 MAX INTERNAL VOLTAGE = 1143.29 TIME CONSTANT = 2.400000

ONLY 37.7 % OF COIL VOLUME GOES NORMAL.

Proprietary

```
"QATCH1, QUENCH SIMULATION FOR MICE MATCH1 MAGNET, JULY 07, 2006"
60.,200,300,3000,10
1,5
.80,0.455E-11,"99.999 COPPER"
3
0.0,0.12E-7,0,0.118E-12,3.25,0.71E-5,3.029,0,0
40,0.141E-11,2.71,0,0,0.834E-3,1.74,0,0
80,0.467E-9,1.45,0,0,0.2636,0.4235,0,0
0
9.,111.8
44.3,.017842,4.2
.20,900,0
0.0002,0.0002,4.4699,162.106,20.1168,2.23495,81.053,10.0584
214.2,0.010,0,1000000,15.716,0
```

Proprietary

APPENDIX II-15-2

Analysis of Quench M2 Coil

For MICE Spectrometer Solenoid Magnets

Wang NMR, Inc.

550 North Canyons Parkway , Livermore, Ca. 94551

Proprietary

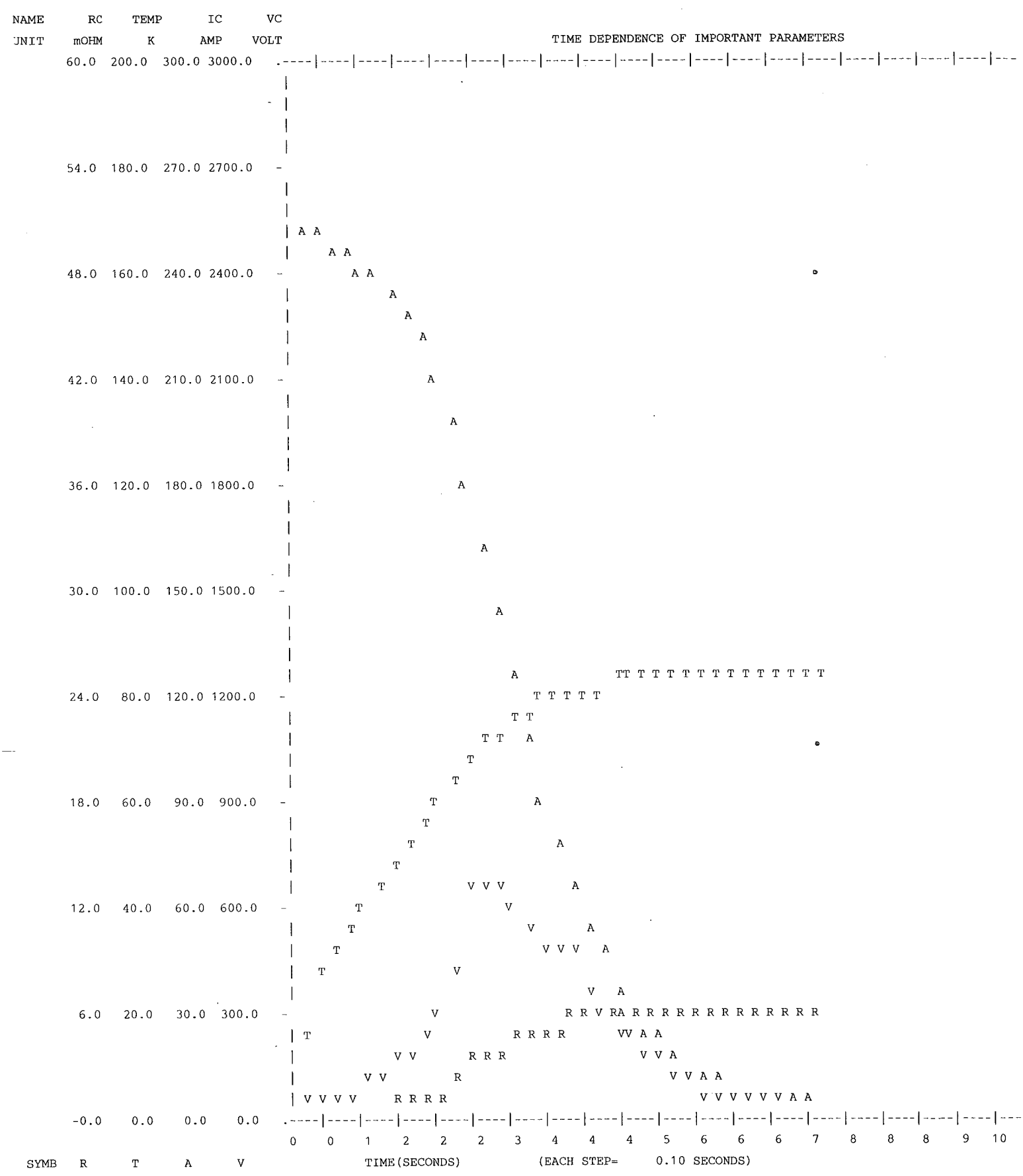

Proprietary

QMATCH2, QUENCH SIMULATION FOR MICE MATCH2 MAGNET, JULY 07, 2006
(FILD=DRHOC*AMP effective)

COMPONENT PROPERTIES

COMPONENT : 99.999 COPPER DRHOC : 4.55E-12

FRAC	THETA	A	AEX	B	BEX	C	CEX	D	DEX
0.8000	0.00	12.0000E-09	0.0000	11.8000E-14	3.2500	71.0000E-07	3.0290	0.0000E+00	0.0000
0.8000	40.00	14.1000E-13	2.7100	0.0000E+00	0.0000	83.4000E-05	1.7400	0.0000E+00	0.0000
0.8000	80.00	46.7000E-11	1.4500	0.0000E+00	0.0000	26.3600E-02	0.4235	0.0000E+00	0.0000

CRIT. TEMP. AT 0 FIELD : 9.0 DEG. KELVIN [THMAX]
MAX. FIELD AT TEMP THET : 111.8 K GAUSS [BMAX]
PEAK FIELD ON CONDUCTOR : 40.10 KGAUSS [FIED]
UNIT CELL AREA (WITH AMPS AMPO) : 0.0178 cm^2 [AR]
INITIAL TEMP THET : 4.20 DEG. KELVIN [THET]

INITIAL CURRENT = 251.80 [AMPO]
INITIAL PROT.R. = 0.0100 [RPR]
GAMMA = 0.00 [GAM]
R. SWITCH = 1000000.00 [RSW]
COIL INDUCTANCE = 6.8514 [HEN]
COIL INIT RESIS = 0.0000 [RO]

INITIAL VELOCITY = 2670.28 [VO]
UNIT CELL AREA = 0.017842 [AR]
INITIAL TEMPERATURE = 4.2000 [THET]
ALPHA = 0.00020 [AL1]
INITIAL X. VELOCITY = 37.7635 [VOX]
EPSILON = 0.00020 [EPS1]
INITIAL Y. VELOCITY = 37.7635 [VOY]
X COIL DIMENSION = 2.98 [XLIM]
Y COIL DIMENSION = 162.11 [YLIM]
Z COIL DIMENSION = 19.95 [ZLIM]
COORD. OF SOURCE X = 1.49 [XO]
COORD. OF SOURCE Y = 81.05 [YO]
COORD. OF SOURCE Z = 9.97 [ZO]

BREAKER DELAY TIME = 0.00 [DTIM]
CONDUCTOR LENGTH = 540110.56 [CONDL]
COIL VOLUME = 9636.65 [VOLTRU]

XM :	0.00	0.00	0.00	0.00	2.98	2.98	2.98	2.98
YM :	0.00	0.00	162.11	162.11	0.00	0.00	162.11	162.11
ZM :	0.00	19.95	0.00	19.95	0.00	19.95	0.00	19.95

Proprietary

WANG NMR QUENCH SIMULATION: FILENAME= QMATCH2 07-07-2006 18:28:32

TIME TIM	CURRENT AMP	I/IO AMPF	COIL OHMS RT	DEL VOLUME VOL(I)	EXT.VOLT VOLT	DEL.INT.ENGY ER	INT.VOLT VINT	MAXTEMP THETA(1)	NORMFRAC VFRAC	VINDUC VINDUC	VUNBAL VUNBAL	POWER POWR	VELOC V
0.20	250.6	0.9952	0.1479E+00	0.2836E+04	2.5	0.1875E+04	37.2	17.5	0.2943	11.7	25.5	0.938E+04	1502. 1
0.40	249.1	0.9891	0.2016E+00	0.2676E+03	2.5	0.2533E+04	50.5	26.3	0.3221	17.1	33.4	0.127E+05	1495. 5
0.60	247.0	0.9811	0.2677E+00	0.2543E+03	2.5	0.3321E+04	66.7	32.1	0.3485	24.1	42.6	0.166E+05	1485. 5
0.80	244.5	0.9710	0.3425E+00	0.2500E+03	2.5	0.4180E+04	84.6	36.5	0.3744	32.6	52.0	0.209E+05	1473. 5
1.00	241.4	0.9586	0.4278E+00	0.2465E+03	2.4	0.5114E+04	104.6	40.2	0.4000	42.8	61.8	0.256E+05	1458. 5
1.20	237.4	0.9429	0.5505E+00	0.2429E+03	2.4	0.6415E+04	132.9	43.9	0.4252	57.5	75.4	0.321E+05	1440. 5
1.40	232.5	0.9233	0.7006E+00	0.2387E+03	2.4	0.7898E+04	166.3	47.7	0.4500	75.9	90.4	0.395E+05	1416. 5
1.60	226.4	0.8993	0.8819E+00	0.2336E+03	2.3	0.9534E+04	205.0	51.7	0.4742	98.3	106.7	0.477E+05	1387. 5
1.80	219.1	0.8701	0.1100E+01	0.2274E+03	2.3	0.1128E+05	249.1	55.8	0.4978	125.2	124.0	0.564E+05	1351. 5
2.00	210.1	0.8346	0.1391E+01	0.2200E+03	2.2	0.1335E+05	304.7	59.9	0.5206	159.8	144.9	0.668E+05	1307. 5
2.20	198.0	0.7862	0.1975E+01	0.2110E+03	2.1	0.1744E+05	415.0	63.9	0.5425	226.3	188.7	0.872E+05	1253. 5
2.40	179.3	0.7120	0.3222E+01	0.1987E+03	2.0	0.2525E+05	637.8	67.7	0.5631	360.3	277.5	0.126E+06	1181. 5
2.60	160.3	0.6366	0.3619E+01	0.1799E+03	1.8	0.2327E+05	648.9	70.9	0.5818	378.6	270.3	0.116E+06	1069. 5
2.80	141.7	0.5626	0.3972E+01	0.1609E+03	1.6	0.2041E+05	636.7	73.6	0.5985	382.0	254.7	0.102E+06	956. 5
3.00	124.0	0.4923	0.4272E+01	0.1422E+03	1.4	0.1715E+05	605.2	75.8	0.6133	372.0	233.2	0.857E+05	845. 5
3.20	107.6	0.4272	0.4518E+01	0.1244E+03	1.2	0.1388E+05	560.0	77.5	0.6262	351.4	208.6	0.694E+05	739. 5
3.40	92.7	0.3683	0.4713E+01	0.1079E+03	1.1	0.1091E+05	507.0	78.8	0.6374	323.8	183.2	0.545E+05	642. 5
3.60	79.5	0.3159	0.4864E+01	0.9305E+02	0.9	0.8367E+04	451.1	79.8	0.6470	292.5	158.6	0.418E+05	553. 5
3.80	66.3	0.2632	0.5706E+01	0.7981E+02	0.8	0.7221E+04	453.9	80.7	0.6553	298.0	155.9	0.361E+05	474. 5
4.00	55.1	0.2187	0.5785E+01	0.6649E+02	0.7	0.5082E+04	383.4	81.4	0.6622	254.3	129.1	0.254E+05	395. 5
4.20	45.7	0.1813	0.5841E+01	0.5524E+02	0.6	0.3542E+04	321.6	81.9	0.6679	215.2	106.4	0.177E+05	328. 5
4.40	37.8	0.1502	0.5881E+01	0.4581E+02	0.5	0.2452E+04	268.5	82.2	0.6727	180.9	87.6	0.123E+05	272. 5
4.60	31.3	0.1242	0.5908E+01	0.3793E+02	0.4	0.1689E+04	223.4	82.5	0.6766	151.4	72.0	0.844E+04	225. 5
4.80	25.9	0.1027	0.5927E+01	0.3138E+02	0.3	0.1160E+04	185.4	82.6	0.6799	126.2	59.1	0.580E+04	187. 5
5.00	21.4	0.0848	0.5940E+01	0.2594E+02	0.3	0.7943E+03	153.6	82.7	0.6826	105.0	48.6	0.397E+04	154. 5
5.20	17.6	0.0701	0.5950E+01	0.2143E+02	0.2	0.5432E+03	127.1	82.8	0.6848	87.2	39.9	0.272E+04	127. 5
5.40	14.6	0.0579	0.5956E+01	0.1771E+02	0.2	0.3710E+03	105.1	82.8	0.6866	72.3	32.8	0.186E+04	105. 5
5.60	12.0	0.0478	0.5961E+01	0.1462E+02	0.1	0.2532E+03	86.9	82.9	0.6882	59.9	27.0	0.127E+04	87. 5
5.80	9.9	0.0395	0.5964E+01	0.1207E+02	0.1	0.1727E+03	71.8	82.9	0.6894	49.6	22.2	0.864E+03	72. 5
6.00	8.2	0.0326	0.5966E+01	0.9968E+01	0.1	0.1178E+03	59.3	82.9	0.6904	41.0	18.3	0.589E+03	59. 5
6.20	6.8	0.0269	0.5968E+01	0.8229E+01	0.1	0.8030E+02	49.0	82.9	0.6913	33.9	15.1	0.402E+03	49. 5
6.40	5.6	0.0222	0.5969E+01	0.6793E+01	0.1	0.5473E+02	40.4	82.9	0.6920	28.0	12.4	0.274E+03	40. 5
6.60	4.6	0.0183	0.5970E+01	0.5607E+01	0.1	0.3730E+02	33.4	82.9	0.6926	23.1	10.2	0.187E+03	33. 5
6.80	3.8	0.0151	0.5970E+01	0.4628E+01	0.0	0.2542E+02	27.5	82.9	0.6931	19.1	8.4	0.127E+03	28. 5
7.00	3.1	0.0125	0.5971E+01	0.3820E+01	0.0	0.1732E+02	22.7	82.9	0.6935	15.8	6.9	0.866E+02	23. 5
7.20	2.6	0.0103	0.5971E+01	0.3153E+01	0.0	0.1180E+02	18.8	82.9	0.6938	13.0	5.7	0.590E+02	19. 5

TOTAL INTERNAL ENERGY = 0.2258E+06 TOTAL SWITCH ENERGY = 0.1588E-04 TOTAL EXT. ENERGY = 0.1588E+04

FRACTION OF ENERGY DUMPED IN HE = 0.993016 INTEGRAL CURRENT SQUARED DT = 0.1588E+06

MAX TEMPERATURE RISE = 82.95 MAX INTERNAL VOLTAGE = 453.88 TIME CONSTANT = 3.600001

ONLY 69.4 % OF COIL VOLUME GOES NORMAL.

Proprietary

```
"QMATCH2, QUENCH SIMULATION FOR MICE MATCH2 MAGNET, JULY 07, 2006"
50.,200,300,3000,10
1,5
.80,0.455E-11,"99.999 COPPER"
3
0.0,0.12E-7,0,0.118E-12,3.25,0.71E-5,3.029,0,0
40,0.141E-11,2.71,0,0,0.834E-3,1.74,0,0
80,0.467E-9,1.45,0,0,0.2636,0.4235,0,0
0
9.,111.8
40.1,.017842,4.2
.20,900,0
0.0002,0.0002,2.9799,162.106,19.9492,1.48995,81.053,9.9746
251.8,0.010,0,1000000,6.8514,0
```

Proprietary

APPENDIX II-15-3

Analysis of Quench End1 Coil

For MICE Spectrometer Solenoid Magnets

Wang NMR, Inc.

550 North Canyons Parkway , Livermore, Ca. 94551

Proprietary

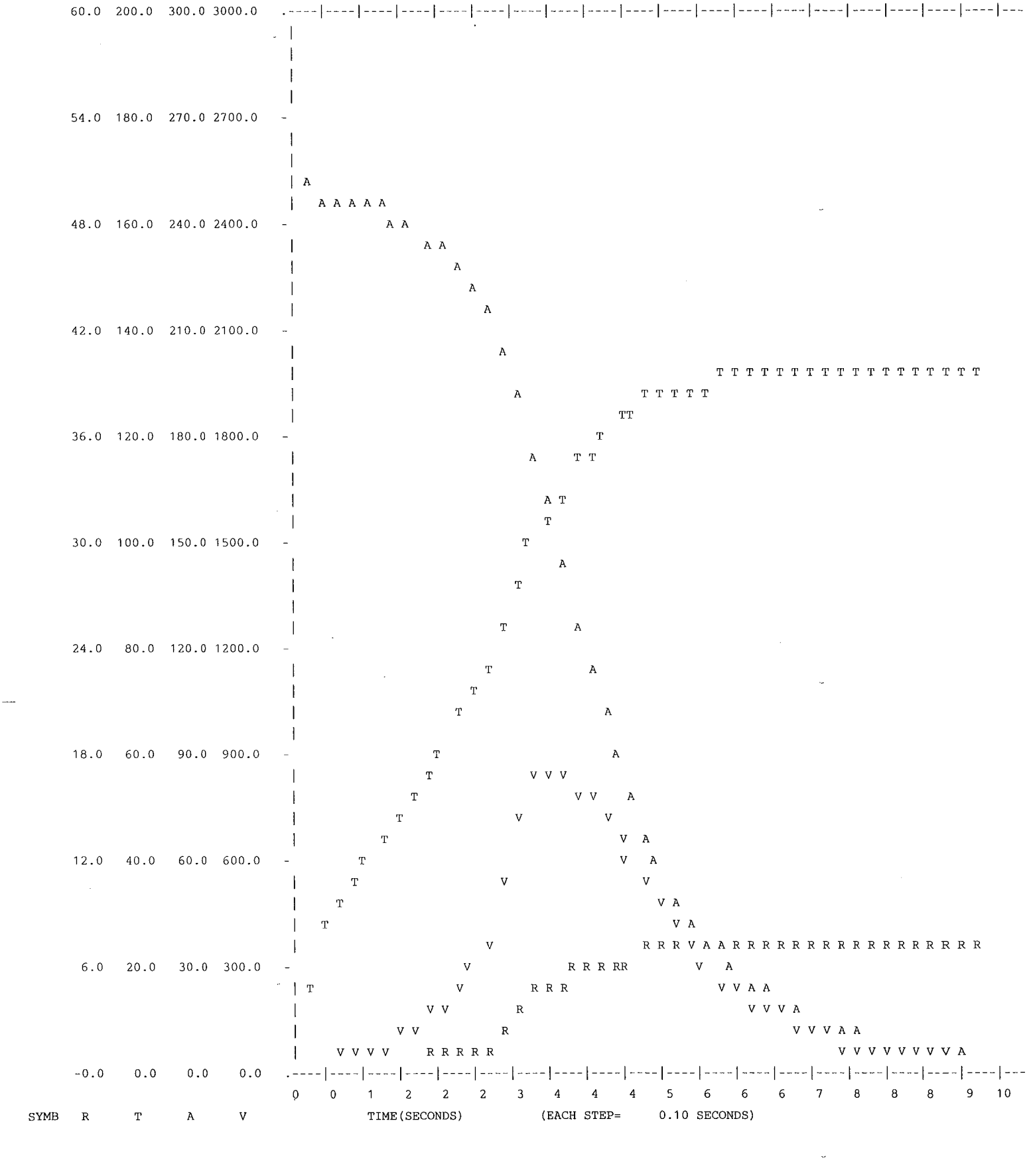

Proprietary

QMIEND1, QUENCH SIMULATION FOR MICE END1 MAGNET, JULY 07, 2006
(FILD=DRHOC*AMP effective)

COMPONENT PROPERTIES

COMPONENT : 99.999 COPPER DRHOC : 4.55E-12

FRAC	THETA	A	AEX	B	BEX	C	CEX	D	DEX
0.8000	0.00	12.0000E-09	0.0000	11.8000E-14	3.2500	71.0000E-07	3.0290	0.0000E+00	0.0000
0.8000	40.00	14.1000E-13	2.7100	0.0000E+00	0.0000	83.4000E-05	1.7400	0.0000E+00	0.0000
0.8000	80.00	46.7000E-11	1.4500	0.0000E+00	0.0000	26.3600E-02	0.4235	0.0000E+00	0.0000

CRIT. TEMP. AT 0 FIELD : 9.0 DEG. KELVIN [THMAX]
MAX. FIELD AT TEMP THET : 111.8 K GAUSS [BMAX]
PEAK FIELD ON CONDUCTOR : 59.00 KGAUSS [FIED]
UNIT CELL AREA (WITH AMPS AMPO) : 0.0178 cm^2 [AR]
INITIAL TEMP THET : 4.20 DEG. KELVIN [THET]

INITIAL CURRENT = 249.50 [AMPO]
INITIAL PROT.R. = 0.0100 [RPR]
GAMMA = 0.00 [GAM]
R. SWITCH = 1000000.00 [RSW]
COIL INDUCTANCE = 10.5220 [HEN]
COIL INIT RESIS = 0.0000 [RO]

INITIAL VELOCITY = 3711.43 [VO]
UNIT CELL AREA = 0.017842 [AR]
INITIAL TEMPERATURE = 4.2000 [THET]
ALPHA = 0.00010 [AL1]
INITIAL X. VELOCITY = 37.1143 [VOX]
EPSILON = 0.00010 [EPS1]
INITIAL Y. VELOCITY = 37.1143 [VOY]
X COIL DIMENSION = 5.96 [XLIM]
Y COIL DIMENSION = 162.11 [YLIM]
Z COIL DIMENSION = 11.06 [ZLIM]
COORD. OF SOURCE X = 2.98 [XO]
COORD. OF SOURCE Y = 81.05 [YO]
COORD. OF SOURCE Z = 5.53 [ZO]

BREAKER DELAY TIME = 0.00 [DTIM]
CONDUCTOR LENGTH = 599121.00 [CONDL]
COIL VOLUME = 10689.52 [VOLTRU]

XM :	-0.00	-0.00	-0.00	-0.00	5.96	5.96	5.96	5.96
YM :	0.00	0.00	162.11	162.11	0.00	0.00	162.11	162.11
ZM :	0.00	11.06	0.00	11.06	0.00	11.06	0.00	11.06

Proprietary

WANG NMR QUENCH SIMULATION: FILENAME= QEND1 07-07-2006 18:33:21

TIME TIM	CURRENT AMP	I/IO AMPF	COIL OHMS RT	DEL VOLUME VOL(I)	EXT.VOLT VOLT	DEL.INT.ENGY ER	INT.VOLT VINT	MAXTEMP THETA(1)	NORMFRAC VFRAC	VINDUC VINDUC	VUNBAL VUNBAL	POWER POWR	VELOC V
0.20	249.1	0.9984	0.7178E-01	0.1380E+04	2.5	0.8935E+03	17.9	17.3	0.1291	2.6	15.3	0.447E+04	1488. 1
0.40	248.6	0.9962	0.1027E+00	0.2304E+03	2.5	0.1274E+04	25.6	26.1	0.1506	4.2	21.3	0.637E+04	1486. 2
0.60	247.8	0.9932	0.1495E+00	0.3828E+03	2.5	0.1847E+04	37.2	31.9	0.1864	7.4	29.8	0.923E+04	1482. 2
0.80	246.8	0.9893	0.1959E+00	0.2127E+03	2.5	0.2406E+04	48.5	36.4	0.2063	10.5	38.0	0.120E+05	1478. 5
1.00	245.6	0.9844	0.2497E+00	0.2036E+03	2.5	0.3043E+04	61.6	40.2	0.2254	14.5	47.2	0.152E+05	1472. 5
1.20	244.0	0.9781	0.3253E+00	0.1992E+03	2.5	0.3924E+04	79.9	44.0	0.2440	20.1	59.8	0.196E+05	1465. 5
1.40	242.1	0.9702	0.4197E+00	0.1961E+03	2.4	0.4999E+04	102.4	48.1	0.2624	27.5	74.9	0.250E+05	1456. 5
1.60	239.5	0.9600	0.5387E+00	0.1934E+03	2.4	0.6312E+04	130.4	52.4	0.2805	37.2	93.1	0.316E+05	1444. 5
1.80	236.4	0.9473	0.6856E+00	0.1907E+03	2.4	0.7867E+04	164.2	57.1	0.2983	49.7	114.5	0.393E+05	1429. 5
2.00	232.4	0.9316	0.8652E+00	0.1878E+03	2.4	0.9668E+04	204.5	62.0	0.3159	65.3	139.2	0.483E+05	1410. 5
2.20	227.6	0.9122	0.1083E+01	0.1843E+03	2.3	0.1170E+05	251.6	67.1	0.3331	84.6	167.0	0.585E+05	1386. 5
2.40	221.8	0.8888	0.1343E+01	0.1802E+03	2.3	0.1391E+05	305.6	72.4	0.3500	107.7	197.9	0.696E+05	1357. 5
2.60	214.7	0.8606	0.1659E+01	0.1754E+03	2.2	0.1632E+05	367.9	77.8	0.3664	135.6	232.3	0.816E+05	1323. 5
2.80	204.7	0.8204	0.2447E+01	0.1697E+03	2.1	0.2256E+05	525.4	84.2	0.3823	201.7	323.8	0.113E+06	1281. 5
3.00	191.2	0.7664	0.3451E+01	0.1617E+03	2.0	0.2892E+05	706.4	91.4	0.3974	281.5	424.8	0.145E+06	1221. 5
3.20	175.4	0.7029	0.4351E+01	0.1510E+03	1.9	0.3182E+05	832.1	98.2	0.4115	343.2	488.9	0.159E+06	1140. 5
3.40	159.0	0.6374	0.4889E+01	0.1384E+03	1.8	0.3007E+05	857.5	104.4	0.4245	364.7	492.8	0.150E+06	1046. 5
3.60	143.0	0.5733	0.5282E+01	0.1255E+03	1.6	0.2672E+05	840.0	109.7	0.4362	367.1	472.9	0.134E+06	949. 5
3.80	127.7	0.5119	0.5622E+01	0.1129E+03	1.4	0.2301E+05	804.2	114.2	0.4468	359.9	444.3	0.115E+06	853. 5
4.00	113.2	0.4538	0.5964E+01	0.1008E+03	1.3	0.1946E+05	761.8	117.9	0.4562	348.1	413.7	0.973E+05	762. 5
4.20	99.9	0.4002	0.6201E+01	0.8930E+02	1.1	0.1590E+05	702.1	121.0	0.4645	326.7	375.4	0.795E+05	675. 5
4.40	87.7	0.3515	0.6393E+01	0.7875E+02	1.0	0.1275E+05	638.3	123.4	0.4719	301.7	336.6	0.637E+05	596. 5
4.60	76.8	0.3077	0.6545E+01	0.6916E+02	0.9	0.1007E+05	574.0	125.3	0.4784	275.0	299.0	0.503E+05	523. 5
4.80	67.0	0.2687	0.6664E+01	0.6054E+02	0.8	0.7857E+04	511.7	126.7	0.4840	248.0	263.6	0.393E+05	458. 5
5.00	58.4	0.2341	0.6757E+01	0.5285E+02	0.7	0.6073E+04	453.0	127.9	0.4890	221.8	231.2	0.304E+05	400. 5
5.20	50.8	0.2037	0.6829E+01	0.4605E+02	0.6	0.4660E+04	398.9	128.7	0.4933	197.1	201.8	0.233E+05	348. 5
5.40	44.2	0.1770	0.6884E+01	0.4006E+02	0.5	0.3556E+04	349.9	129.4	0.4970	174.1	175.7	0.178E+05	303. 5
5.60	38.3	0.1535	0.6979E+01	0.3481E+02	0.4	0.2722E+04	308.2	129.9	0.5003	154.4	153.8	0.136E+05	263. 5
5.80	33.2	0.1330	0.7011E+01	0.3019E+02	0.4	0.2056E+04	268.5	130.3	0.5031	135.3	133.2	0.103E+05	228. 5
6.00	28.7	0.1152	0.7035E+01	0.2616E+02	0.3	0.1549E+04	233.5	130.5	0.5056	118.2	115.3	0.775E+04	198. 5
6.20	24.9	0.0997	0.7053E+01	0.2265E+02	0.3	0.1165E+04	202.7	130.8	0.5077	103.1	99.7	0.583E+04	171. 5
6.40	21.5	0.0863	0.7067E+01	0.1961E+02	0.2	0.8752E+03	175.9	130.9	0.5095	89.7	86.1	0.438E+04	148. 5
6.60	18.6	0.0747	0.7078E+01	0.1697E+02	0.2	0.6565E+03	152.4	131.0	0.5111	78.0	74.4	0.328E+04	128. 5
6.80	16.1	0.0646	0.7086E+01	0.1469E+02	0.2	0.4921E+03	132.0	131.1	0.5125	67.8	64.3	0.246E+04	111. 5
7.00	13.9	0.0559	0.7092E+01	0.1271E+02	0.2	0.3686E+03	114.3	131.2	0.5137	58.8	55.5	0.184E+04	96. 5
7.20	12.1	0.0483	0.7097E+01	0.1099E+02	0.1	0.2760E+03	99.0	131.2	0.5147	51.0	48.0	0.138E+04	83. 5
7.40	10.4	0.0418	0.7100E+01	0.9505E+01	0.1	0.2066E+03	85.6	131.3	0.5156	44.2	41.4	0.103E+04	72. 5
7.60	9.0	0.0362	0.7103E+01	0.8220E+01	0.1	0.1546E+03	74.1	131.3	0.5164	38.3	35.8	0.773E+03	62. 5
7.80	7.8	0.0313	0.7105E+01	0.7109E+01	0.1	0.1156E+03	64.1	131.3	0.5170	33.2	30.9	0.578E+03	54. 5
8.00	6.7	0.0270	0.7107E+01	0.6147E+01	0.1	0.8648E+02	55.4	131.3	0.5176	28.7	26.7	0.432E+03	47. 5
8.20	5.8	0.0234	0.7108E+01	0.5316E+01	0.1	0.6468E+02	47.9	131.4	0.5181	24.9	23.1	0.323E+03	40. 5
8.40	5.0	0.0202	0.7109E+01	0.4597E+01	0.1	0.4837E+02	41.5	131.4	0.5185	21.5	19.9	0.242E+03	35. 5
8.60	4.4	0.0175	0.7110E+01	0.3975E+01	0.1	0.3617E+02	35.9	131.4	0.5189	18.6	17.2	0.181E+03	30. 5
8.80	3.8	0.0151	0.7110E+01	0.3437E+01	0.0	0.2704E+02	31.0	131.4	0.5192	16.1	14.9	0.135E+03	26. 5
9.00	3.3	0.0131	0.7111E+01	0.2971E+01	0.0	0.2022E+02	26.8	131.4	0.5195	13.9	12.9	0.101E+03	22. 5
9.20	2.8	0.0113	0.7111E+01	0.2570E+01	0.0	0.1512E+02	23.2	131.4	0.5197	12.1	11.1	0.756E+02	19. 5

TOTAL INTERNAL ENERGY = 0.3385E+06 TOTAL SWITCH ENERGY = 0.2054E-04 TOTAL EXT. ENERGY = 0.2054E+04

FRACTION OF ENERGY DUMPED IN HE = 0.993968 INTEGRAL CURRENT SQUARED DT = 0.2054E+06

MAX TEMPERATURE RISE = 131.38 MAX INTERNAL VOLTAGE = 857.46 TIME CONSTANT = 4.400000

ONLY 52.0 % OF COIL VOLUME GOES NORMAL.

Proprietary

```
"QMIEND1, QUENCH SIMULATION FOR MICE END1 MAGNET, JULY 07, 2006"
60.,200,300,3000,10
1,5
.80,0.455E-11,"99.999 COPPER"
3
0.0,0.12E-7,0,0.118E-12,3.25,0.71E-5,3.029,0,0
40,0.141E-11,2.71,0,0,0.834E-3,1.74,0,0
80,0.467E-9,1.45,0,0,0.2636,0.4235,0,0
0
9.,111.8
59.,.017842,4.2
.20,900,0
0.0001,0.0001,5.9599,162.106,11.0642,2.98,81.053,5.5321
249.5,0.010,0,1000000,10.522,0
```

Proprietary

APPENDIX II-15-4

Analysis of Quench Center Coil

For MICE Spectrometer Solenoid Magnets

Wang NMR, Inc.

550 North Canyons Parkway , Livermore, Ca. 94551

Proprietary

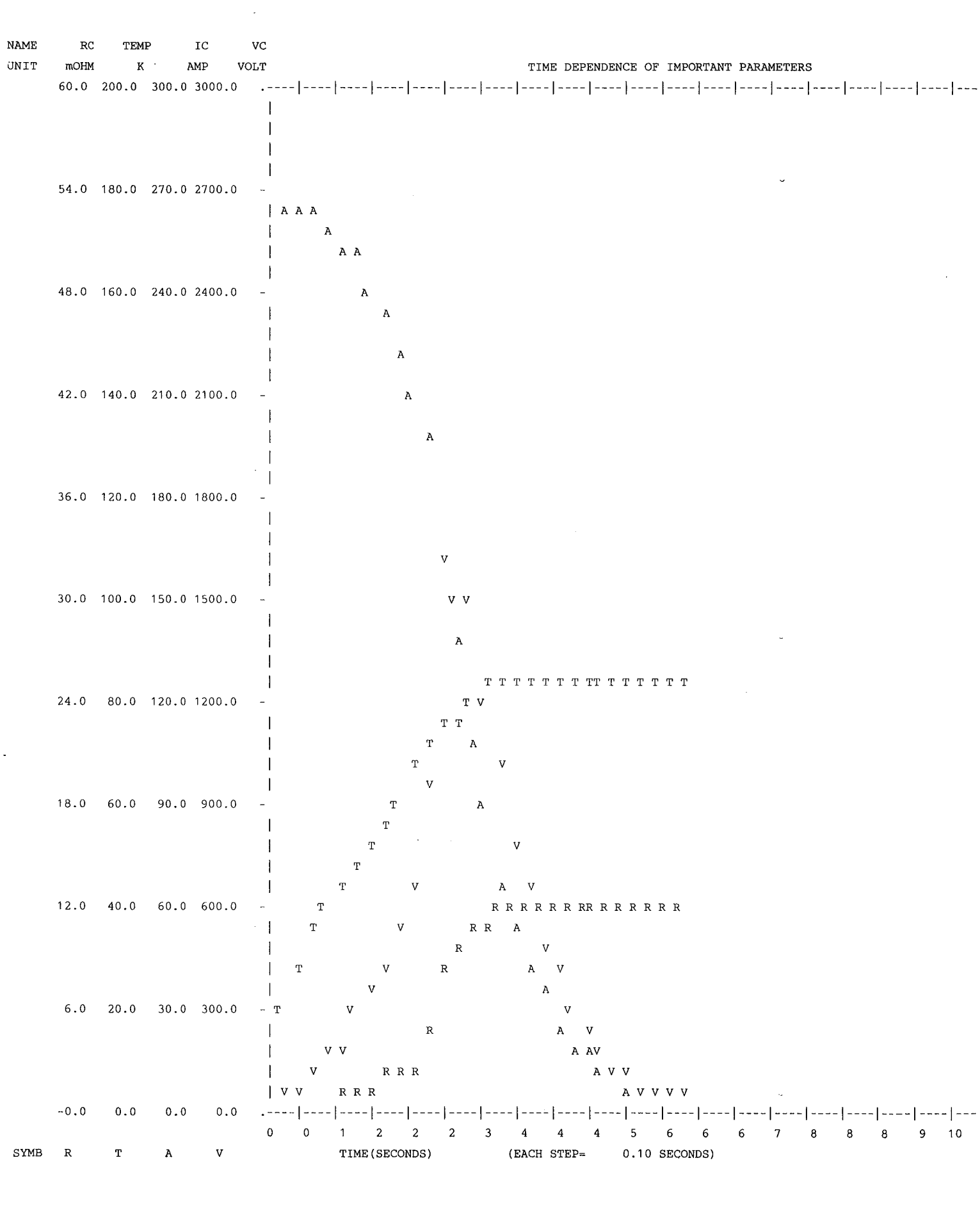

Proprietary

QCENTER, QUENCH SIMULATION FOR MICE CENTER MAGNET(half), JULY 07, 2006
(FILD=DRHOC*AMP effective)

COMPONENT PROPERTIES

COMPONENT : 99.999 COPPER DRHOC : 4.55E-12

FRAC	THETA	A	AEX	B	BEX	C	CEX	D	DEX
0.8000	0.00	12.0000E-09	0.0000	11.8000E-14	3.2500	71.0000E-07	3.0290	0.0000E+00	0.0000
0.8000	40.00	14.1000E-13	2.7100	0.0000E+00	0.0000	83.4000E-05	1.7400	0.0000E+00	0.0000
0.8000	80.00	46.7000E-11	1.4500	0.0000E+00	0.0000	26.3600E-02	0.4235	0.0000E+00	0.0000

CRIT. TEMP. AT 0 FIELD : 9.0 DEG. KELVIN [THMAX]
MAX. FIELD AT TEMP THET : 111.8 K GAUSS [BMAX]
PEAK FIELD ON CONDUCTOR : 42.00 KGAUSS [FIED]
UNIT CELL AREA (WITH AMPS AMPO) : 0.0178 cm^2 [AR]
INITIAL TEMP THET : 4.20 DEG. KELVIN [THET]

INITIAL CURRENT = 265.90 [AMPO]
INITIAL PROT.R. = 0.0100 [RPR]
GAMMA = 0.00 [GAM]
R. SWITCH = 1000000.00 [RSW]
COIL INDUCTANCE = 10.8713 [HEN]
COIL INIT RESIS = 0.0000 [RO]

INITIAL VELOCITY = 2909.94 [VO]
UNIT CELL AREA = 0.017842 [AR]
INITIAL TEMPERATURE = 4.2000 [THET]
ALPHA = 0.00010 [AL1]
INITIAL X. VELOCITY = 29.0994 [VOX]
EPSILON = 0.00010 [EPS1]
INITIAL Y. VELOCITY = 29.0994 [VOY]
X COIL DIMENSION = 2.22 [XLIM]
Y COIL DIMENSION = 162.11 [YLIM]
Z COIL DIMENSION = 131.43 [ZLIM]
COORD. OF SOURCE X = 1.06 [XO]
COORD. OF SOURCE Y = 81.05 [YO]
COORD. OF SOURCE Z = 65.71 [ZO]

BREAKER DELAY TIME = 0.00 [DTIM]
CONDUCTOR LENGTH = 2649163.75 [CONDL]
COIL VOLUME = 47266.38 [VOLTRU]

XM :	0.04	0.04	0.04	0.04	2.17	2.17	2.17	2.17
YM :	0.00	0.00	162.11	162.11	0.00	0.00	162.11	162.11
ZM :	-0.00	131.43	-0.00	131.43	-0.00	131.43	-0.00	131.43

Proprietary

WANG NMR QUENCH SIMULATION: FILENAME= qcenter 07-26-2006 17:00:53

TIME TIM	CURRENT AMP	I/IO AMPF	COIL OHMS RT	DEL VOLUME VOL(I)	EXT.VOLT VOLT	DEL.INT.ENGY ER	INT.VOLT VINT	MAXTEMP THETA(1)	NORMFRAC VFRAC	VINDUC VINDUC	VUNBAL VUNBAL	POWER POWR	VELOC V
0.20	264.9	0.9964	0.1833E+00	0.3340E+04	2.7	0.2591E+04	48.7	19.9	0.0707	3.6	45.1	0.130E+05	1586. 1
0.40	263.4	0.9907	0.2967E+00	0.9983E+03	2.6	0.4165E+04	78.6	28.7	0.0918	7.5	71.2	0.208E+05	1580. 5
0.60	261.3	0.9827	0.4324E+00	0.9377E+03	2.6	0.6001E+04	113.9	34.4	0.1116	13.0	100.9	0.300E+05	1571. 5
0.80	258.4	0.9718	0.5925E+00	0.9191E+03	2.6	0.8090E+04	154.8	38.9	0.1311	20.6	134.2	0.405E+05	1558. 5
1.00	254.5	0.9572	0.8079E+00	0.9048E+03	2.6	0.1079E+05	208.8	43.1	0.1502	31.7	177.0	0.539E+05	1541. 5
1.20	249.4	0.9379	0.1085E+01	0.8892E+03	2.5	0.1406E+05	276.1	47.5	0.1690	47.1	229.0	0.703E+05	1518. 5
1.40	242.8	0.9131	0.1428E+01	0.8702E+03	2.5	0.1777E+05	356.2	52.1	0.1874	67.2	289.0	0.888E+05	1487. 5
1.60	234.5	0.8819	0.1844E+01	0.8465E+03	2.4	0.2173E+05	447.6	56.8	0.2053	92.4	355.2	0.109E+06	1448. 5
1.80	224.4	0.8439	0.2334E+01	0.8172E+03	2.3	0.2567E+05	547.3	61.6	0.2226	122.4	424.9	0.128E+06	1399. 5
2.00	212.3	0.7982	0.2931E+01	0.7817E+03	2.2	0.2952E+05	657.7	66.3	0.2392	157.8	499.9	0.148E+06	1338. 5
2.20	195.0	0.7334	0.4403E+01	0.7392E+03	2.1	0.3967E+05	934.5	70.9	0.2548	238.7	695.9	0.198E+06	1266. 5
2.40	164.9	0.6200	0.8394E+01	0.6791E+03	2.0	0.6385E+05	1637.0	74.9	0.2692	441.2	1195.8	0.319E+06	1163. 5
2.60	136.8	0.5146	0.9235E+01	0.5740E+03	1.6	0.5020E+05	1522.6	77.9	0.2813	428.8	1093.8	0.251E+06	983. 5
2.80	109.7	0.4127	0.1075E+02	0.4763E+03	1.4	0.4025E+05	1470.9	80.5	0.2914	429.0	1041.9	0.201E+06	816. 5
3.00	87.2	0.3278	0.1117E+02	0.3820E+03	1.1	0.2692E+05	1226.3	82.4	0.2995	367.6	858.7	0.135E+06	654. 5
3.20	68.8	0.2586	0.1146E+02	0.3034E+03	0.9	0.1740E+05	998.4	83.6	0.3059	305.7	692.7	0.870E+05	520. 5
3.40	54.0	0.2032	0.1164E+02	0.2394E+03	0.7	0.1101E+05	800.3	84.4	0.3110	249.1	551.2	0.550E+05	410. 5
3.60	42.3	0.1593	0.1175E+02	0.1881E+03	0.5	0.6863E+04	635.0	84.9	0.3149	200.2	434.8	0.343E+05	322. 5
3.80	33.1	0.1246	0.1182E+02	0.1474E+03	0.4	0.4241E+04	500.7	85.2	0.3181	159.4	341.3	0.212E+05	253. 5
4.00	25.9	0.0974	0.1187E+02	0.1153E+03	0.3	0.2605E+04	393.2	85.4	0.3205	126.1	267.1	0.130E+05	198. 5
4.20	20.2	0.0760	0.1190E+02	0.9010E+02	0.3	0.1595E+04	308.0	85.5	0.3224	99.4	208.6	0.797E+04	154. 5
4.40	15.8	0.0593	0.1192E+02	0.7036E+02	0.2	0.9741E+03	240.9	85.6	0.3239	78.1	162.8	0.487E+04	121. 5
4.60	12.3	0.0463	0.1193E+02	0.5492E+02	0.2	0.5941E+03	188.2	85.6	0.3251	61.2	127.0	0.297E+04	94. 5
4.80	9.6	0.0361	0.1194E+02	0.4286E+02	0.1	0.3620E+03	147.0	85.6	0.3260	48.0	99.0	0.181E+04	73. 5
5.00	7.5	0.0282	0.1194E+02	0.3344E+02	0.1	0.2205E+03	114.7	85.6	0.3267	37.5	77.2	0.110E+04	57. 5
5.20	5.8	0.0220	0.1195E+02	0.2608E+02	0.1	0.1342E+03	89.5	85.6	0.3272	29.3	60.2	0.671E+03	45. 5
5.40	4.6	0.0172	0.1195E+02	0.2035E+02	0.1	0.8168E+02	69.9	85.7	0.3277	22.9	46.9	0.408E+03	35. 5
5.60	3.6	0.0134	0.1195E+02	0.1587E+02	0.0	0.4970E+02	54.5	85.7	0.3280	17.9	36.6	0.248E+03	27. 5
5.80	2.8	0.0104	0.1195E+02	0.1238E+02	0.0	0.3024E+02	42.5	85.7	0.3283	14.0	28.5	0.151E+03	21. 5

TOTAL INTERNAL ENERGY = 0.4074E+06 TOTAL SWITCH ENERGY = 0.1595E-04 TOTAL EXT. ENERGY = 0.1595E+04

FRACTION OF ENERGY DUMPED IN HE = 0.996101 INTEGRAL CURRENT SQUARED DT = 0.1595E+06

MAX TEMPERATURE RISE = 85.66 MAX INTERNAL VOLTAGE = 1636.97 TIME CONSTANT = 3.000000

ONLY 32.8 % OF COIL VOLUME GOES NORMAL.

Proprietary

```
"QCENTER, QUENCH SIMULATION FOR MICE CENTER MAGNET(half), JULY 07, 2006"
60.,200,300,3000,10
1,5
.80,0.455E-11,"99.999 COPPER"
3
0.0,0.12E-7,0,0.118E-12,3.25,0.71E-5,3.029,0,0
40,0.141E-11,2.71,0,0,0.834E-3,1.74,0,0
80,0.467E-9,1.45,0,0,0.2636,0.4235,0,0
0
9.,111.8
42.,.017842,4.2
.20,900,0
0.0001,0.0001,2.2185,162.106,131.4298,1.0643,81.053,65.715
265.9,0.0100,0,1000000,10.87125,0
```

Proprietary

APPENDIX II-15-5

Analysis of Quench End2 Coil

For MICE Spectrometer Solenoid Magnets

Wang NMR, Inc.

550 North Canyons Parkway , Livermore, Ca. 94551

Proprietary

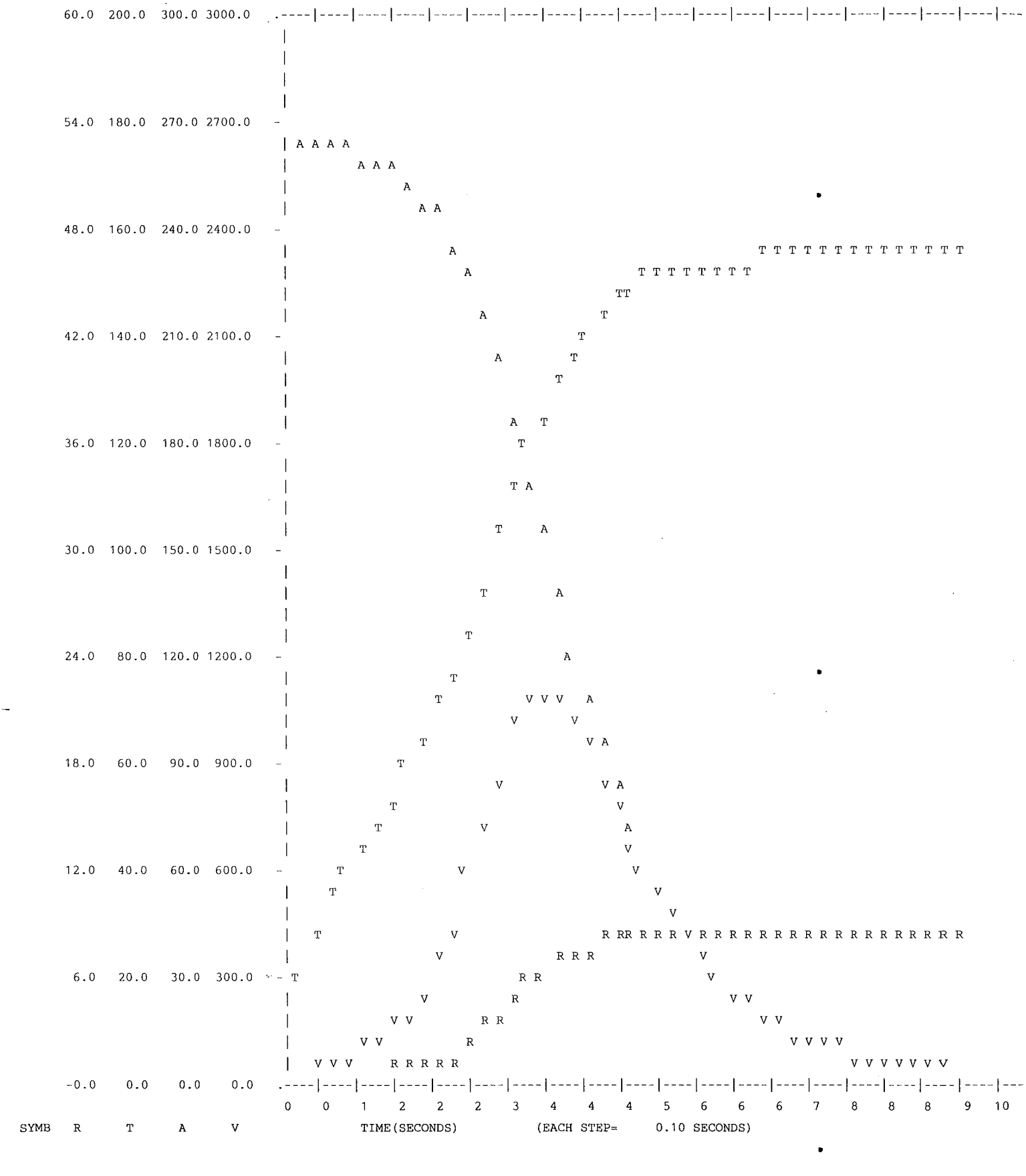

Proprietary

WANG NMR QUENCH SIMULATION: FILENAME= QEND2 07-07-2006 18:37:52

TIME TIM	CURRENT AMP	I/IO AMPF	COIL OHMS RT	DEL VOLUME VOL(I)	EXT.VOLT VOLT	DEL.INT.ENGY ER	INT.VOLT VINT	MAXTEMP THETA(1)	NORMFRAC VFRAC	VINDUC VINDUC	VUNBAL VUNBAL	POWER POWR	VELOC V
0.20	264.8	0.9984	0.9051E-01	0.1657E+04	2.7	0.1273E+04	24.0	19.7	0.1400	3.7	20.3	0.636E+04	1582. 1
0.40	264.2	0.9961	0.1337E+00	0.2603E+03	2.6	0.1875E+04	35.4	28.6	0.1620	6.2	29.2	0.938E+04	1579. 2
0.60	263.3	0.9930	0.1954E+00	0.4325E+03	2.6	0.2728E+04	51.6	34.3	0.1986	10.8	40.8	0.136E+05	1576. 2
0.80	262.2	0.9888	0.2597E+00	0.2527E+03	2.6	0.3601E+04	68.4	38.9	0.2199	15.6	52.8	0.180E+05	1571. 5
1.00	260.8	0.9833	0.3494E+00	0.2406E+03	2.6	0.4805E+04	91.6	43.3	0.2402	22.6	69.0	0.240E+05	1564. 5
1.20	258.8	0.9760	0.4680E+00	0.2348E+03	2.6	0.6365E+04	122.0	47.9	0.2601	32.4	89.6	0.318E+05	1555. 5
1.40	256.3	0.9664	0.6216E+00	0.2307E+03	2.6	0.8329E+04	160.9	52.9	0.2796	45.7	115.2	0.416E+05	1544. 5
1.60	253.0	0.9540	0.8182E+00	0.2271E+03	2.6	0.1075E+05	209.7	58.3	0.2987	63.4	146.3	0.537E+05	1529. 5
1.80	248.8	0.9381	0.1066E+01	0.2233E+03	2.5	0.1365E+05	269.7	64.0	0.3176	86.5	183.2	0.682E+05	1509. 5
2.00	243.4	0.9179	0.1373E+01	0.2190E+03	2.5	0.1700E+05	341.7	70.1	0.3361	115.7	226.0	0.850E+05	1484. 5
2.20	236.8	0.8929	0.1747E+01	0.2139E+03	2.4	0.2071E+05	425.3	76.5	0.3542	151.5	273.8	0.104E+06	1452. 5
2.40	227.1	0.8565	0.2619E+01	0.2077E+03	2.4	0.2937E+05	620.1	84.3	0.3717	231.4	388.7	0.147E+06	1412. 5
2.60	215.9	0.8142	0.3170E+01	0.1991E+03	2.3	0.3271E+05	720.0	93.3	0.3886	280.7	439.4	0.164E+06	1355. 5
2.80	203.3	0.7665	0.3760E+01	0.1891E+03	2.2	0.3506E+05	811.8	102.2	0.4045	329.3	482.5	0.175E+06	1288. 5
3.00	187.2	0.7060	0.5079E+01	0.1779E+03	2.0	0.4198E+05	1032.6	110.9	0.4196	434.1	598.5	0.210E+06	1212. 5
3.20	170.4	0.6426	0.5774E+01	0.1638E+03	1.9	0.4048E+05	1081.0	118.8	0.4334	469.3	611.7	0.202E+06	1117. 5
3.40	153.4	0.5785	0.6421E+01	0.1490E+03	1.7	0.3730E+05	1094.2	125.9	0.4460	488.8	605.4	0.186E+06	1016. 5
3.60	136.9	0.5160	0.6942E+01	0.1341E+03	1.5	0.3268E+05	1065.0	131.9	0.4573	487.8	577.2	0.163E+06	915. 5
3.80	121.2	0.4571	0.7345E+01	0.1196E+03	1.4	0.2751E+05	1005.2	136.8	0.4674	470.5	534.7	0.138E+06	816. 5
4.00	106.6	0.4021	0.7741E+01	0.1059E+03	1.2	0.2275E+05	938.4	140.9	0.4764	447.6	490.8	0.114E+06	723. 5
4.20	93.4	0.3521	0.8010E+01	0.9316E+02	1.1	0.1822E+05	854.2	144.1	0.4843	414.2	440.0	0.911E+05	636. 5
4.40	81.4	0.3071	0.8223E+01	0.8155E+02	0.9	0.1434E+05	767.7	146.6	0.4911	377.5	390.2	0.717E+05	557. 5
4.60	70.8	0.2670	0.8389E+01	0.7112E+02	0.8	0.1113E+05	683.2	148.6	0.4972	340.0	343.1	0.556E+05	486. 5
4.80	61.4	0.2317	0.8517E+01	0.6184E+02	0.7	0.8544E+04	603.2	150.1	0.5024	303.4	299.8	0.427E+05	422. 5
5.00	53.2	0.2007	0.8615E+01	0.5366E+02	0.6	0.6506E+04	529.4	151.2	0.5069	268.7	260.7	0.325E+05	366. 5
5.20	46.0	0.1736	0.8690E+01	0.4647E+02	0.5	0.4923E+04	462.5	152.0	0.5108	236.5	226.0	0.246E+05	317. 5
5.40	39.8	0.1500	0.8747E+01	0.4019E+02	0.5	0.3707E+04	402.7	152.7	0.5142	207.3	195.4	0.185E+05	275. 5
5.60	34.3	0.1295	0.8790E+01	0.3473E+02	0.4	0.2781E+04	349.6	153.2	0.5172	181.0	168.6	0.139E+05	237. 5
5.80	29.6	0.1117	0.8822E+01	0.2998E+02	0.3	0.2081E+04	303.0	153.5	0.5197	157.6	145.3	0.104E+05	205. 5
6.00	25.6	0.0964	0.8846E+01	0.2587E+02	0.3	0.1554E+04	262.2	153.8	0.5219	137.0	125.2	0.777E+04	177. 5
6.20	22.0	0.0831	0.8865E+01	0.2231E+02	0.3	0.1158E+04	226.6	154.0	0.5238	118.8	107.8	0.579E+04	152. 5
6.40	19.0	0.0716	0.8878E+01	0.1924E+02	0.2	0.8626E+03	195.7	154.1	0.5254	102.9	92.8	0.431E+04	131. 5
6.60	16.4	0.0617	0.8889E+01	0.1659E+02	0.2	0.6417E+03	168.9	154.2	0.5268	89.1	79.8	0.321E+04	113. 5
6.80	14.1	0.0532	0.8896E+01	0.1429E+02	0.2	0.4771E+03	145.7	154.3	0.5280	77.0	68.7	0.239E+04	98. 5
7.00	12.2	0.0459	0.8902E+01	0.1232E+02	0.1	0.3546E+03	125.6	154.4	0.5291	66.5	59.1	0.177E+04	84. 5
7.20	10.5	0.0395	0.8907E+01	0.1061E+02	0.1	0.2634E+03	108.3	154.4	0.5300	57.5	50.8	0.132E+04	73. 5
7.40	9.0	0.0340	0.8910E+01	0.9145E+01	0.1	0.1956E+03	93.3	154.5	0.5307	49.6	43.7	0.978E+03	62. 5
7.60	7.8	0.0293	0.8913E+01	0.7879E+01	0.1	0.1452E+03	80.4	154.5	0.5314	42.8	37.6	0.726E+03	54. 5
7.80	6.7	0.0253	0.8915E+01	0.6787E+01	0.1	0.1078E+03	69.3	154.5	0.5320	36.9	32.4	0.539E+03	46. 5
8.00	5.8	0.0218	0.8916E+01	0.5847E+01	0.1	0.8002E+02	59.7	154.5	0.5325	31.8	27.9	0.400E+03	40. 5
8.20	5.0	0.0187	0.8917E+01	0.5037E+01	0.1	0.5939E+02	51.5	154.5	0.5329	27.5	24.0	0.297E+03	34. 5
8.40	4.3	0.0161	0.8918E+01	0.4339E+01	0.0	0.4407E+02	44.3	154.5	0.5333	23.7	20.7	0.220E+03	30. 5
8.60	3.7	0.0139	0.8919E+01	0.3738E+01	0.0	0.3271E+02	38.2	154.5	0.5336	20.4	17.8	0.164E+03	26. 5
8.80	3.2	0.0120	0.8919E+01	0.3220E+01	0.0	0.2427E+02	32.9	154.6	0.5338	17.6	15.3	0.121E+03	22. 5
9.00	2.7	0.0103	0.8920E+01	0.2774E+01	0.0	0.1801E+02	28.3	154.6	0.5341	15.2	13.2	0.901E+02	19. 5

TOTAL INTERNAL ENERGY = 0.4692E+06 TOTAL SWITCH ENERGY = 0.2195E-04 TOTAL EXT. ENERGY = 0.2195E+04

FRACTION OF ENERGY DUMPED IN HE = 0.995344 INTEGRAL CURRENT SQUARED DT = 0.2195E+06

MAX TEMPERATURE RISE = 154.56 MAX INTERNAL VOLTAGE = 1094.22 TIME CONSTANT = 4.200000

ONLY 53.4 % OF COIL VOLUME GOES NORMAL.

Proprietary

QEND2, QUENCH SIMULATION FOR MICE END2 MAGNET, JULY 07, 2006
(FILD=DRHOC*AMP effective)

COMPONENT PROPERTIES

COMPONENT : 99.999 COPPER DRHOC : 4.55E-12

FRAC	THETA	A	AEX	B	BEX	C	CEX	D	DEX
0.8000	0.00	12.0000E-09	0.0000	11.8000E-14	3.2500	71.0000E-07	3.0290	0.0000E+00	0.0000
0.8000	40.00	14.1000E-13	2.7100	0.0000E+00	0.0000	83.4000E-05	1.7400	0.0000E+00	0.0000
0.8000	80.00	46.7000E-11	1.4500	0.0000E+00	0.0000	26.3600E-02	0.4235	0.0000E+00	0.0000

CRIT. TEMP. AT 0 FIELD : 9.0 DEG. KELVIN [THMAX]
MAX. FIELD AT TEMP THET : 111.8 K GAUSS [BMAX]
PEAK FIELD ON CONDUCTOR : 63.70 KGAUSS [FIED]
UNIT CELL AREA (WITH AMPS AMPO) : 0.0178 cm^2 [AR]
INITIAL TEMP THET : 4.20 DEG. KELVIN [THET]

INITIAL CURRENT = 265.20 [AMPO]
INITIAL PROT.R. = 0.0100 [RPR]
GAMMA = 0.00 [GAM]
R. SWITCH = 1000000.00 [RSW]
COIL INDUCTANCE = 12.8850 [HEN]
COIL INIT RESIS = 0.0000 [RO]

INITIAL VELOCITY = 4337.75 [VO]
UNIT CELL AREA = 0.017842 [AR]
INITIAL TEMPERATURE = 4.2000 [THET]
ALPHA = 0.00010 [AL1]
INITIAL X. VELOCITY = 43.3775 [VOX]
EPSILON = 0.00010 [EPS1]
INITIAL Y. VELOCITY = 43.3775 [VOY]
X COIL DIMENSION = 6.60 [XLIM]
Y COIL DIMENSION = 162.11 [YLIM]
Z COIL DIMENSION = 11.06 [ZLIM]
COORD. OF SOURCE X = 3.30 [XO]
COORD. OF SOURCE Y = 81.05 [YO]
COORD. OF SOURCE Z = 5.53 [ZO]

BREAKER DELAY TIME = 0.00 [DTIM]
CONDUCTOR LENGTH = 663306.44 [CONDL]
COIL VOLUME = 11834.71 [VOLTRU]

XM :	0.00	0.00	0.00	0.00	6.60	6.60	6.60	6.60
YM :	0.00	0.00	162.11	162.11	0.00	0.00	162.11	162.11
ZM :	0.00	11.06	0.00	11.06	0.00	11.06	0.00	11.06

Proprietary

```
"QEND2, QUENCH SIMULATION FOR MICE END2 MAGNET, JULY 07, 2006"
60.,200,300,3000,10
1,5
.80,0.455E-11,"99.999 COPPER"
3
0.0,0.12E-7,0,0.118E-12,3.25,0.71E-5,3.029,0,0
40,0.141E-11,2.71,0,0,0.834E-3,1.74,0,0
80,0.467E-9,1.45,0,0,0.2636,0.4235,0,0
0
9.,111.8
63.7,.017842,4.2
.20,900,0
0.0001,0.0001,6.5984,162.106,11.0642,3.2992,81.053,5.5321
265.2,0.010,0,1000000,12.885,0
```

Proprietary

Appendix III-3-1

Engineering Design Drawing For

300 K Vacuum Vessel

Wang NMR Inc.

• 550 North Canyons Parkway • Livermore, CA 94551

Proprietary

Proprietary

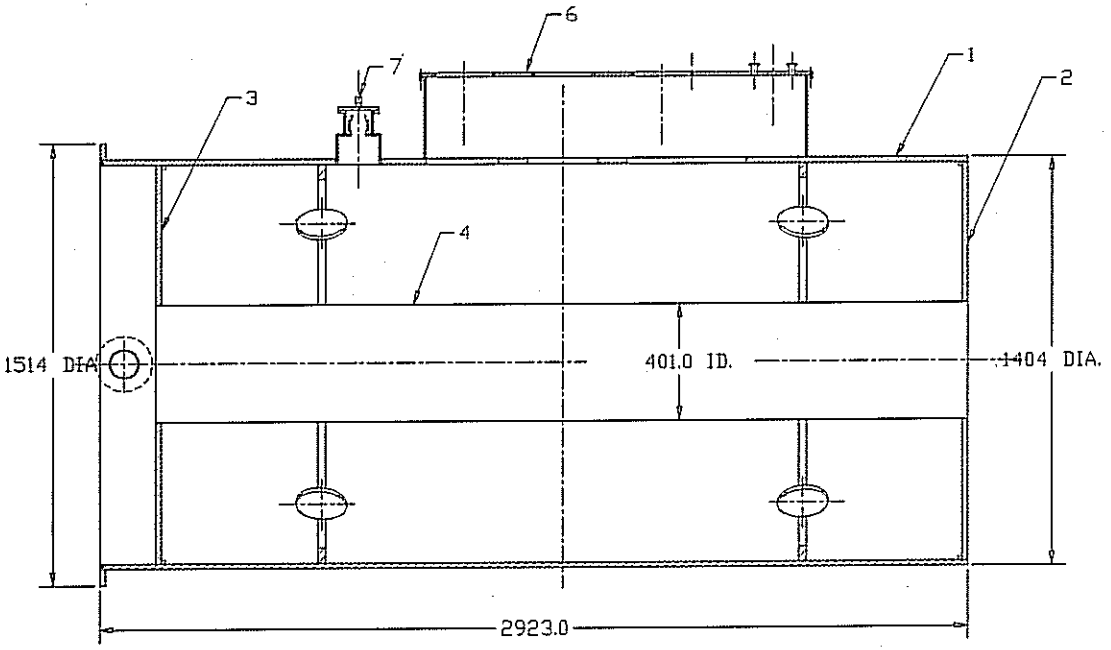

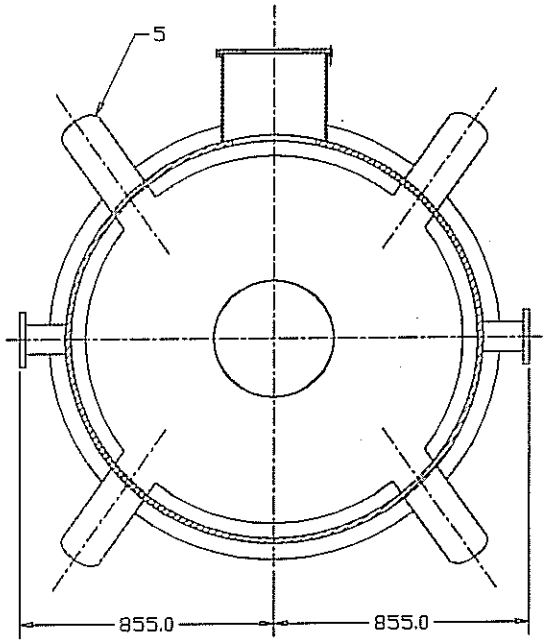

NOTES:
1) DIMENSIONS ARE IN mm
2) MATERIAL IS 304 S.S.

QTY.	ITEM	DWG. No.	DESCRIPTION	NOTE
1	7	MICE-3700	SERVICE TOWER	
1	6	MICE-3600	CRYOCOOLER MOUNTING PLATE	
8	5	MICE-3500	COLD MASS SUPPORT	
1	4	MICE-3400	CENTER TUBE	
1	3	MICE-3300	FRONT END PLATE	
1	2	MICE-3200	BACK END PLATE	
1	1	MICE-3100	OUTER CYLINDER	

WANG NMR, INC.
330 North canyons Parkway, Livermore, CA 94550

VACUUM VESSEL

D MICE-3000

DO NOT SCALE

Proprietary

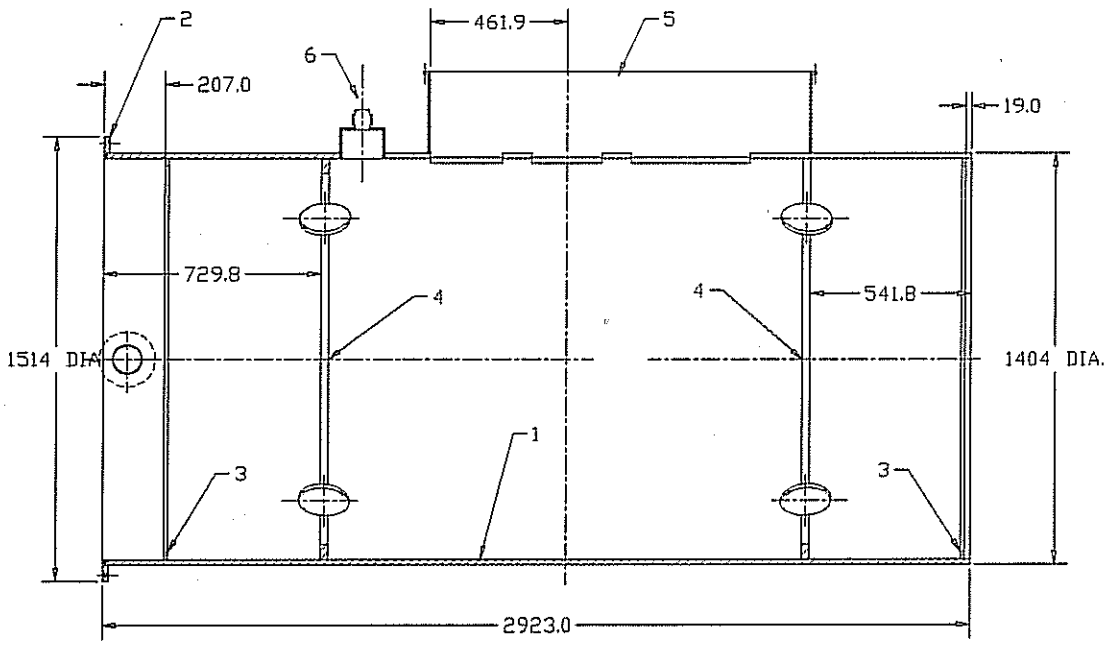

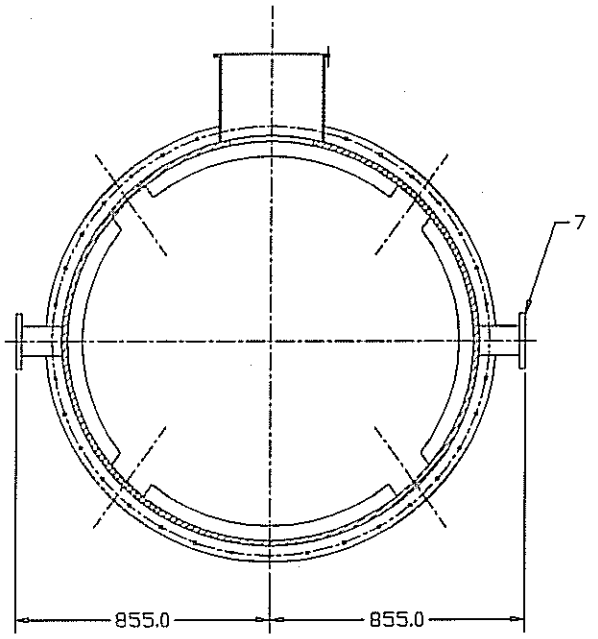

NOTES:
1) DIMENSIONS ARE IN mm
2) MATERIAL IS 304 S.S.

QTY.	ITEM	DWG. No.	DESCRIPTION	NOTE
2	7	MICE-3 170	FLANGE	
1	6	MICE-3 160	LHe INPUT TOWER	
1	5	MICE-3150	CRYOCOOLER TOWER	
2	4	MICE-3140	REINFORCEMENT	
2	3	MICE-3 130	STOP RING	
1	2	MICE-3120	END FLANGE	
1	1	MICE-3110	CYLINDER	

WANG NMR, INC.
550 North canyons Parkway, Livermore, CA 94550

OUTER CYLINDER

D MICE-3100

DO NOT SCALE

Proprietary

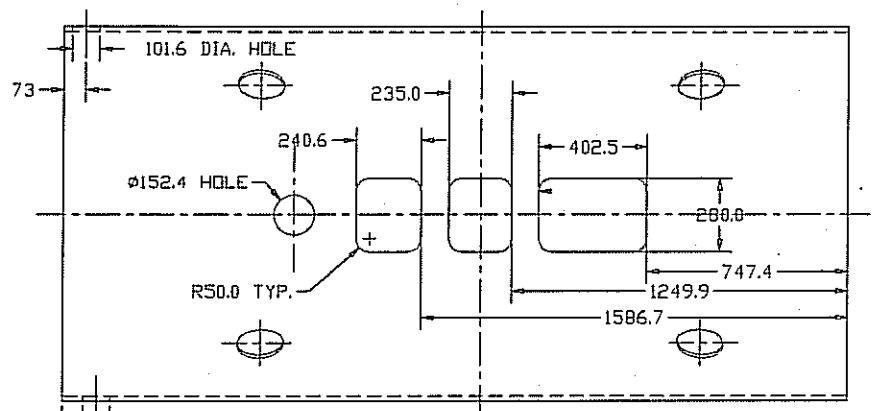

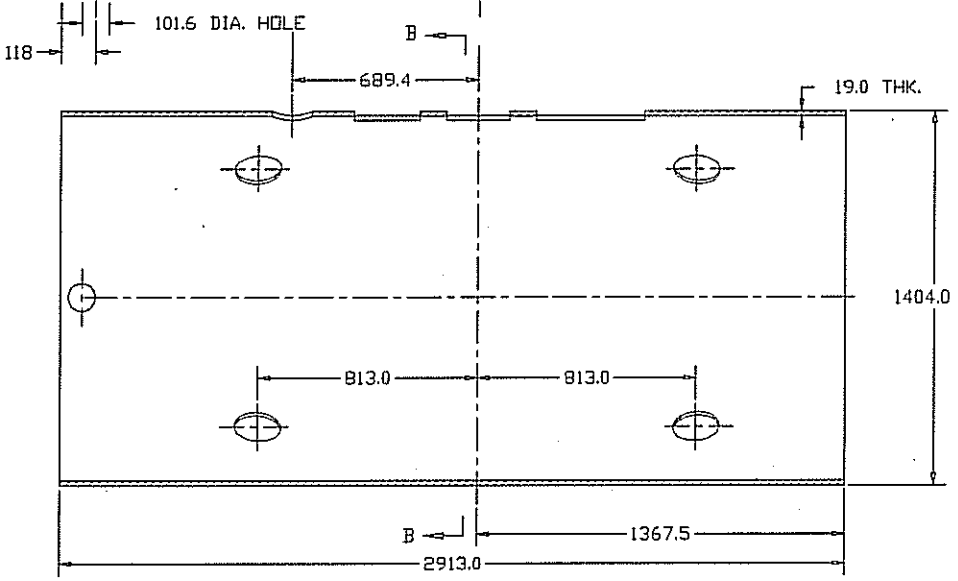

C-C

NOTES:
1) DIMENSIONS ARE IN mm
2) MATERIAL IS 19mm THK. 304 S.S. PLATE
3) WORK SCOPE: CUTTING MATERIAL, ROLLING, FULL PENETRATING WELDING AND CUTTING HOLES
4) QTY. 1

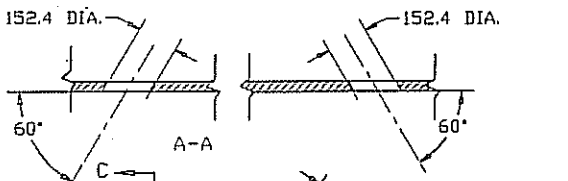

A-A

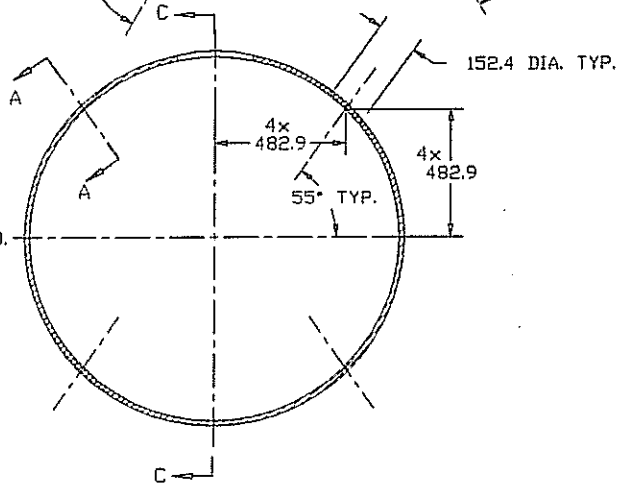

B-B

WANG NMR, INC. 330 North Canyons Parkway, Livermore, CA 94550	
CYLINDER	
D	MICE-3110
DO NOT SCALE	

Proprietary

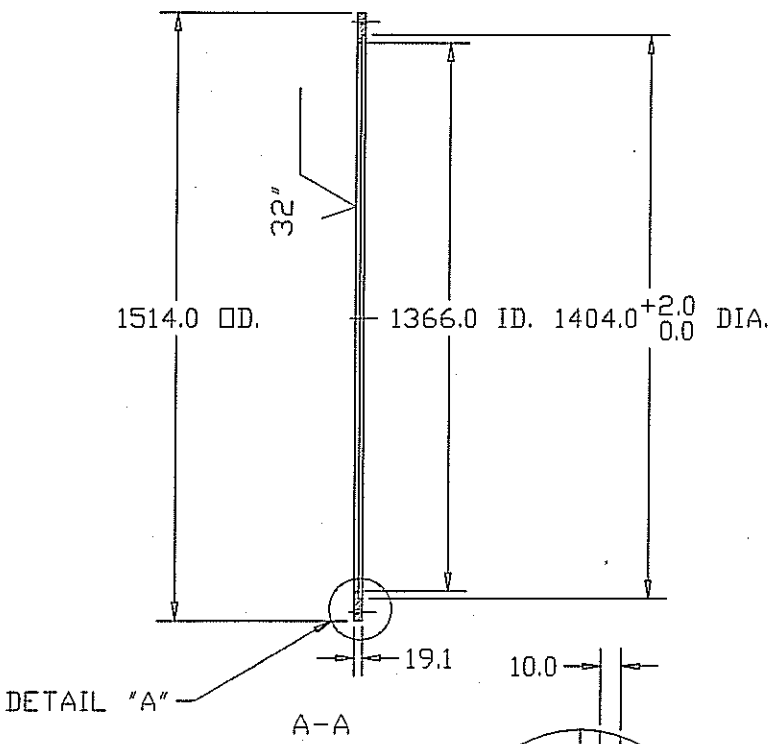

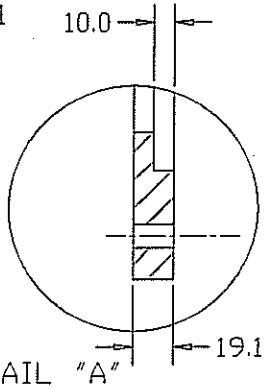

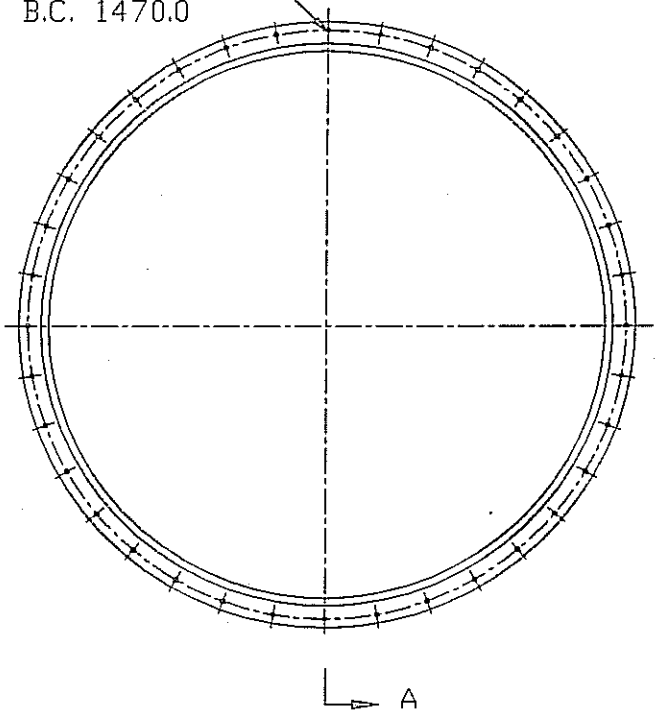

REVISIONS				
ZONE	REV	DESCRIPTION	DATE	APPROVED

UNLESS OTHERWISE SPECIFIED TOLERANCES:
.XXX ± .005
.XX ± .02

TREATMENT
FINISH
ACT. WT. CALC. WT.

CONTRACT NO.
DRAWN DATE
CHECK
DESIGN
DESIGN ACTIVITY
CUSTOMER

WANG NMR, INC.
550 North canyons Parkway, Livermore, CA 94550

TITLE
END FLANGE

SIZE C
DWG NO. MICE-3120
SCALE DO NOT SCALE
RELEASE DATE
SHEET

Proprietary

REVISIONS				
ZONE	REV	DESCRIPTION	DATE	APPROVED

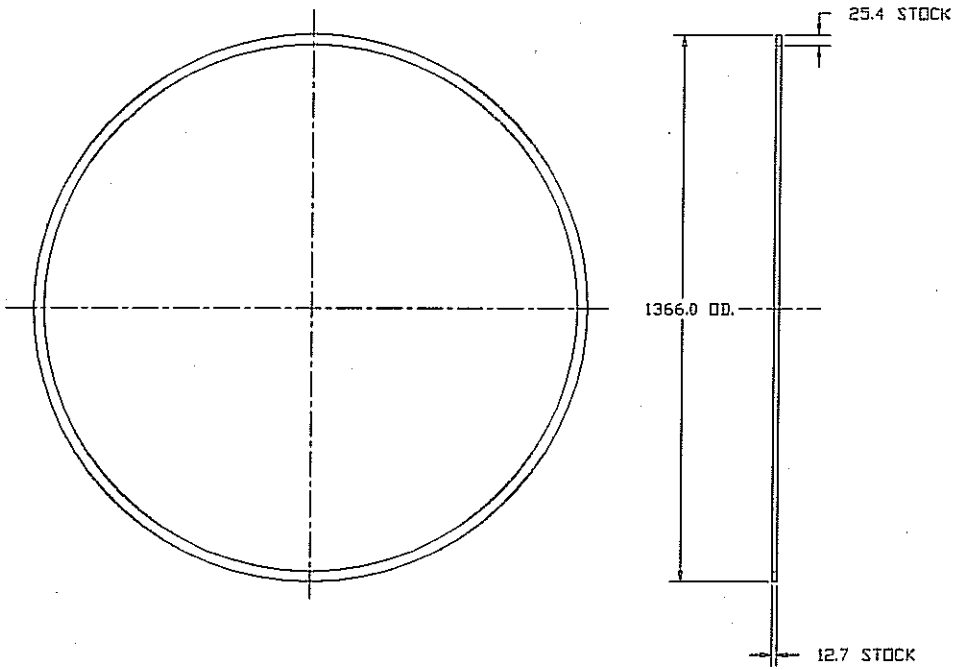

NOTES:
1) DIMENSIONS ARE IN mm
2) MATERIAL IS 1.0"x0.5" 304 S.S. BAR
3) WORK: CUTTING & ROLLING
4) QTY. 2

UNLESS OTHERWISE SPECIFIED TOLERANCES:
.XXX ± .005
.XX ± .02

CONTRACT NO.
DRAWN
DATE
CHECK
TREATMENT
DESIGN
FINISH
DESIGN ACTIVITY
ACT. WT.
CALC. WT.
CUSTOMER

WANG NMR, INC.
550 North canyons Parkway, Livermore, CA 94550

TITLE
STOP RING

SIZE C
DWG NO. MICE-3130
SCALE DO NOT SCALE
RELEASE DATE
SHEET

Proprietary

REVISIONS				
ZONE	REV	DESCRIPTION	DATE	APPROVED

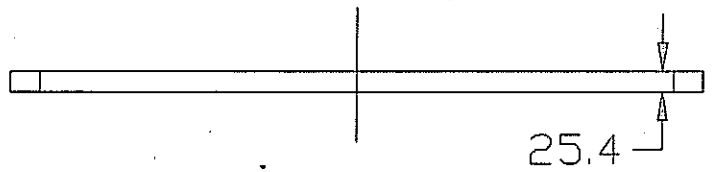

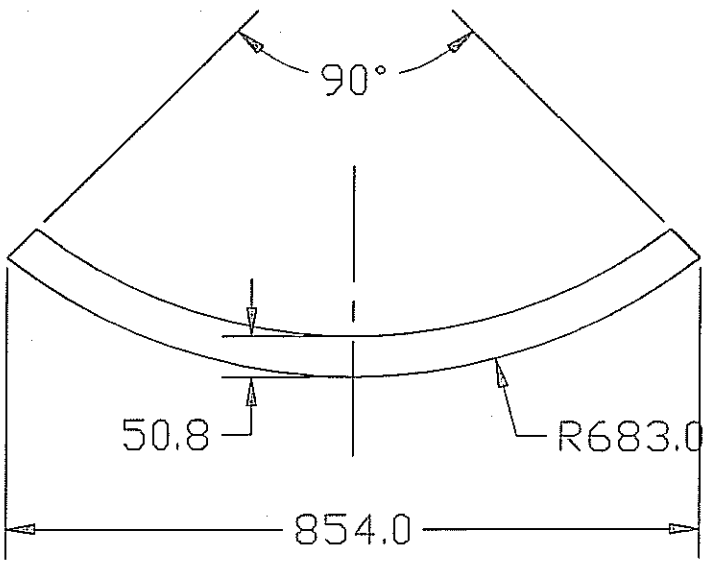

NOTES:
1) DIMENSIONS ARE IN mm
2) MATERIAL IS 1"x2"
   304 S.S. BAR
3) QTY. 8

UNLESS OTHERWISE SPECIFIED TOLERANCES:
.XXX ± .005
.XX ± .02

TREATMENT
FINISH
ACT. WT. CALC. WT.

CONTRACT NO.
DRAWN DATE
CHECK
DESIGN
DESIGN ACTIVITY
CUSTOMER

WANG NMR, INC.
550 North canyons Parkway, Livermore, CA 94550

TITLE
REINFORMENT

SIZE C
DWG NO. MICE-3140
SCALE DO NOT SCALE
RELEASE DATE
SHEET

Proprietary

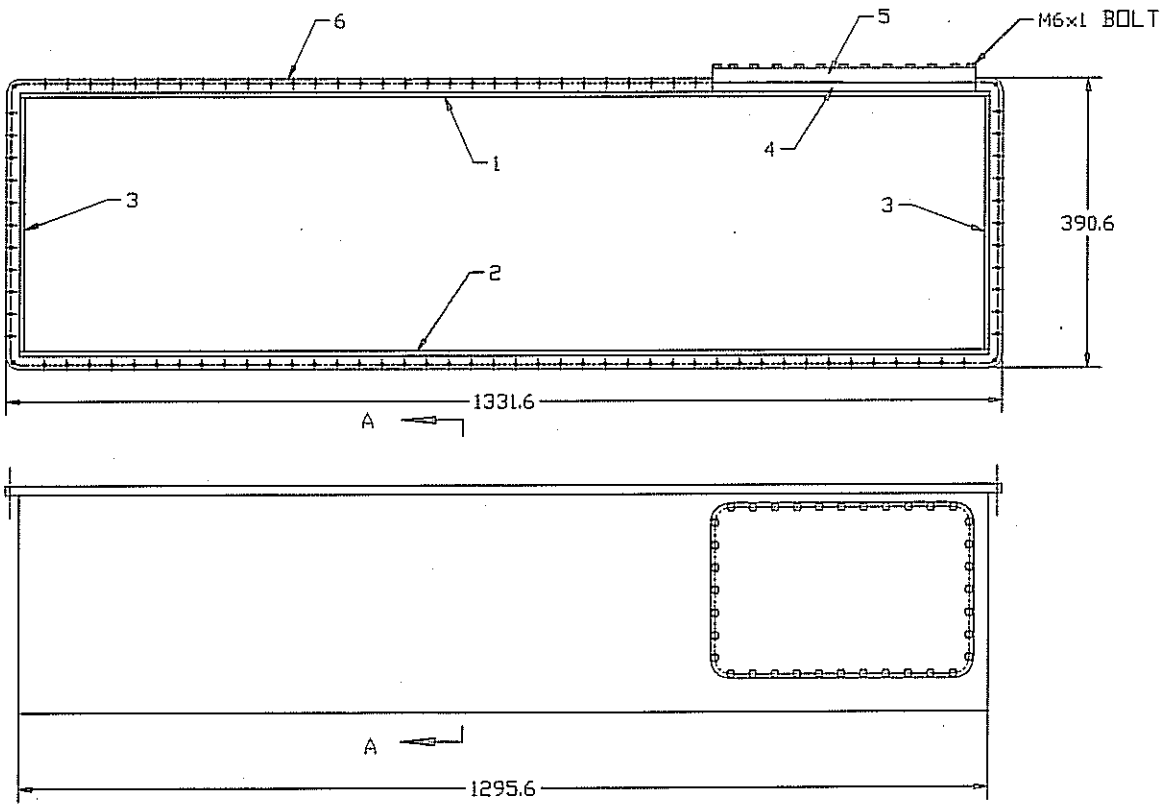

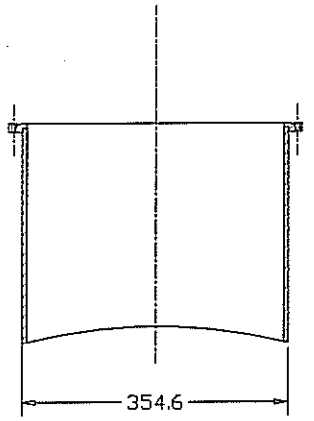

A-A

NOTES:
1) DIMENSIONS ARE IN mm
2) qty. 1

QTY.	ITEM	DWG. No.	DESCRIPTION	NOTE
1	6	MICE-3156	FLANGE	6061T6
1	5	MICE-3155	COVER	304 S.S.
1	4	MICE-3154	WINDOR	304 S.S.
2	3	MICE-3153	END PLATE	304 S.S.
1	2	MICE-3152	SIDE PLATE 2	304 S.S.
1	1	MICE-3151	SIDE PLATE 1	304 S.S.

UNLESS OTHERWISE SPECIFIED TOLERANCES:

WANG NMR, INC.
550 North canyons Parkway, Livermore, CA 94550

CROCODLER TOWER

D MICE-3150

Proprietary

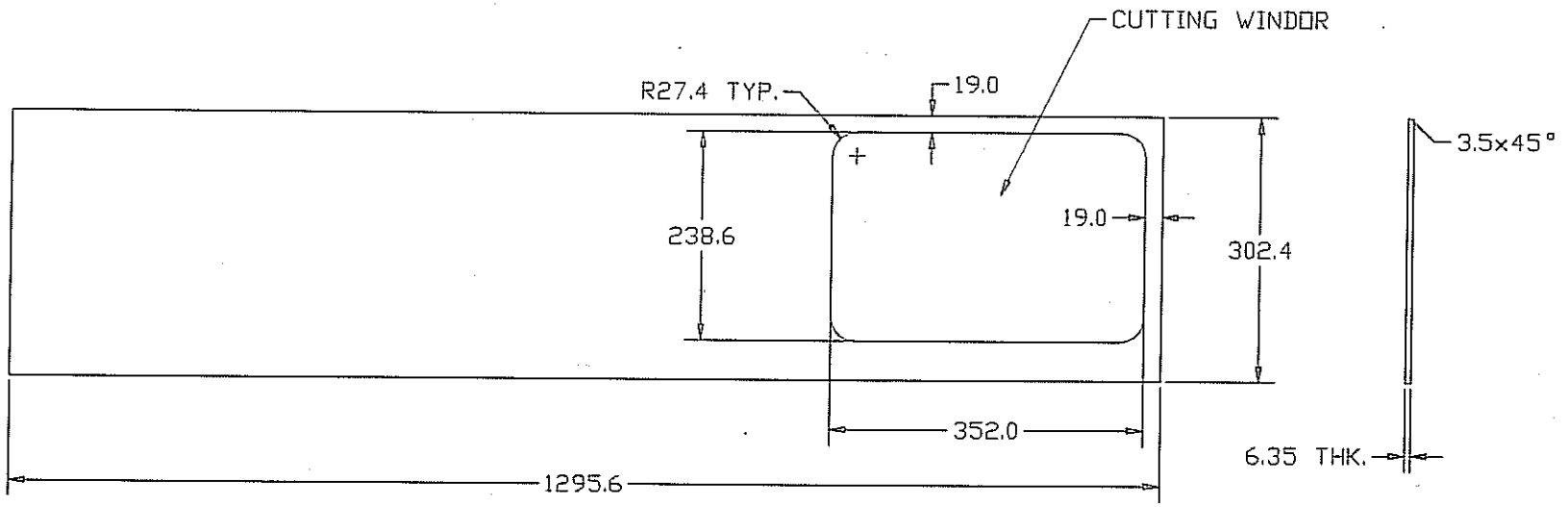

NOTES:
1) DIMENSIONS ARE IN mm
2) MATERIAL IS 1/4" THK 304 S.S. PLATE
3) QTY. 1

WANG NMR, INC.
550 North Canyons Parkway, Livermore, CA 94550

SIDE PLATE 1

D MICE-3151

DO NOT SCALE

Proprietary

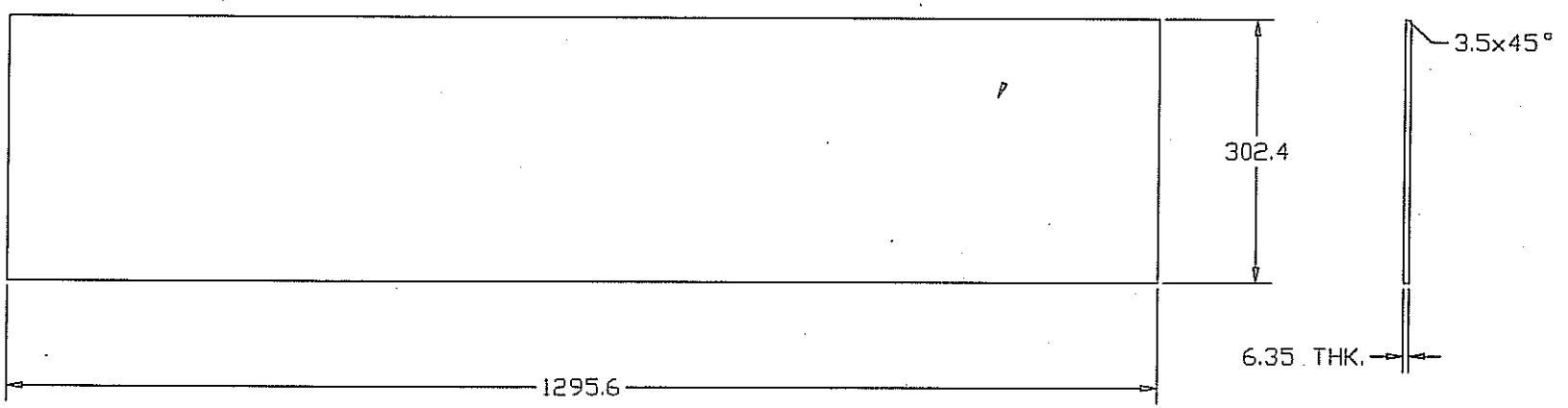

NOTES:
1) DIMENSIONS ARE IN mm
2) MATERIAL IS 1/4" THK 304 S.S. PLATE
3) QTY. 1

WANG NMR, INC.
550 North canyon Parkway, Livermore, CA 94550

SIDE PLATE 2

D MICE-3152

DO NOT SCALE

Proprietary

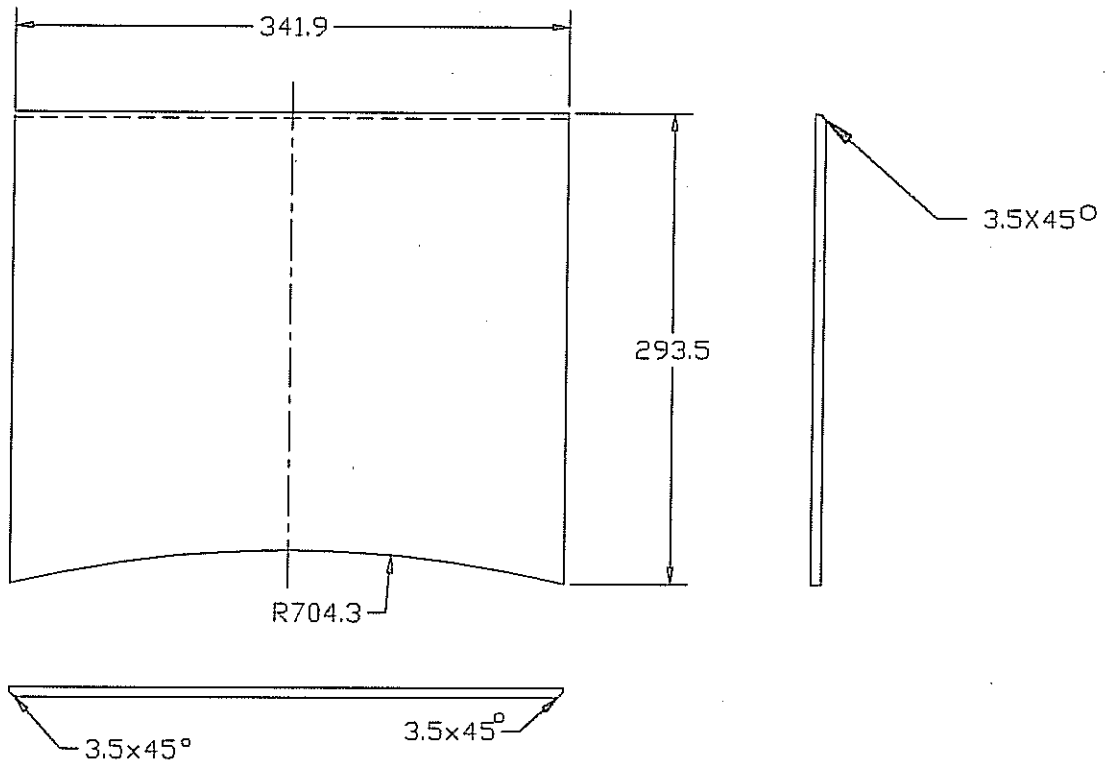

NOTES:
1) DIMENSIONS ARE IN mm
2) MATERIAL IS 1/4" THK. 304 S.S. PLATE
3) QTY. 2

REVISIONS				
ZONE	REV	DESCRIPTION	DATE	APPROVED

UNLESS OTHERWISE SPECIFIED TOLERANCES:
.XXX ± .005
.XX ± .02

TREATMENT
FINISH
ACT. WT. CALC. WT.

CONTRACT NO.
DRAWN DATE
CHECK
DESIGN
DESIGN ACTIVITY
CUSTOMER

WANG NMR, INC.
550 North canyons Parkway, Livermore, CA 94550

TITLE
END PLATE

SIZE C
DWG NO. MICE-3153
SCALE DO NOT SCALE
RELEASE DATE
SHEET

Proprietary

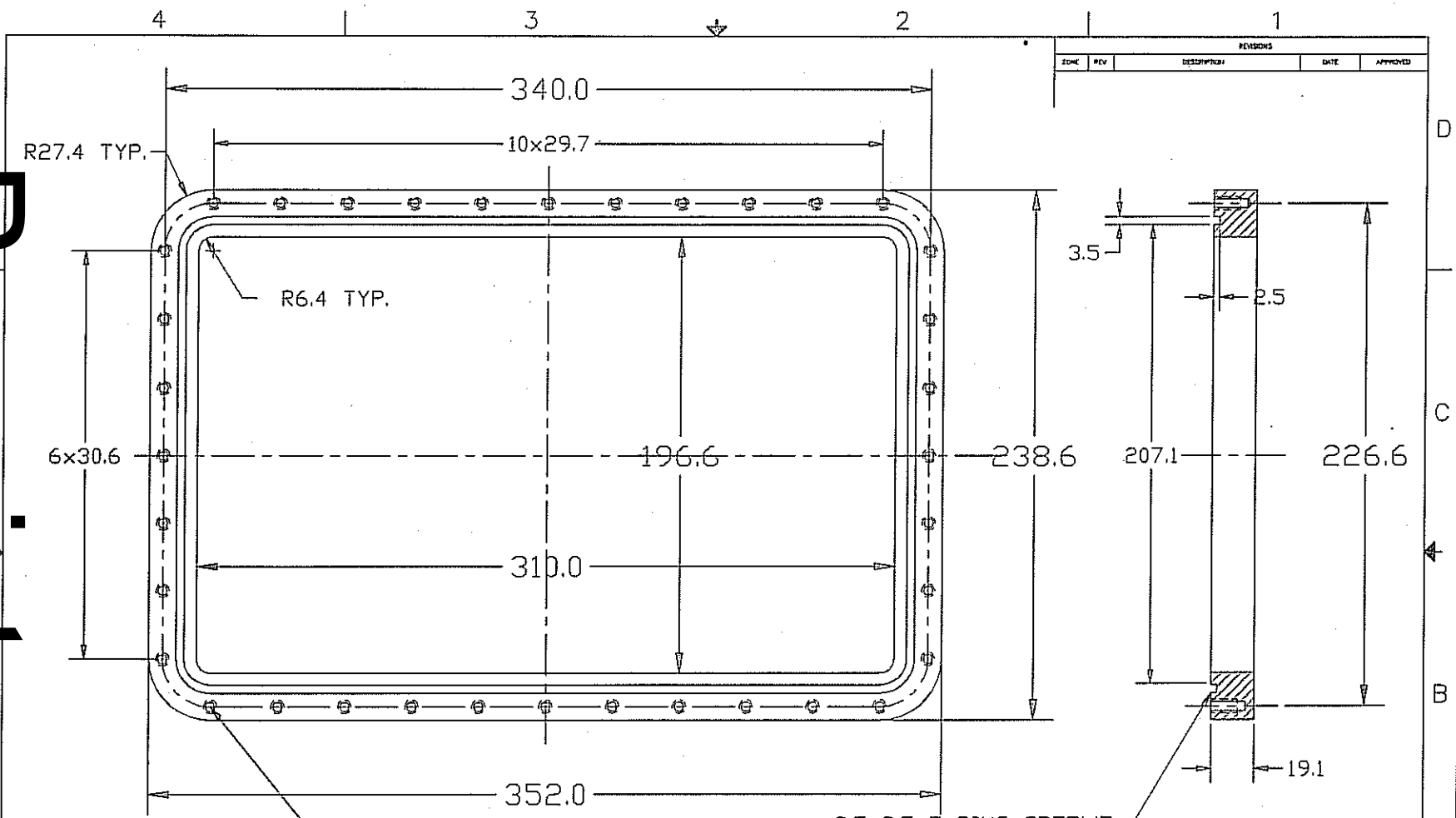

NOTES:
1) DIMENSIONS ARE IN mm
2) MATERIAL IS 304 S.S.
3) QTY. 1

REVISIONS				
ZONE	REV	DESCRIPTION	DATE	APPROVED

UNLESS OTHERWISE SPECIFIED TOLERANCES:
.XXX ± .005
.XX ± .02

TREATMENT
FINISH
ACT. WT. CALC. WT.

WANG NMR, INC.
550 North canyons Parkway, Livermore, CA 94550

TITLE: WINDOW

SIZE: C
DWG NO: MICE-3154
SCALE: DO NOT SCALE
RELEASE DATE
SHEET

Proprietary

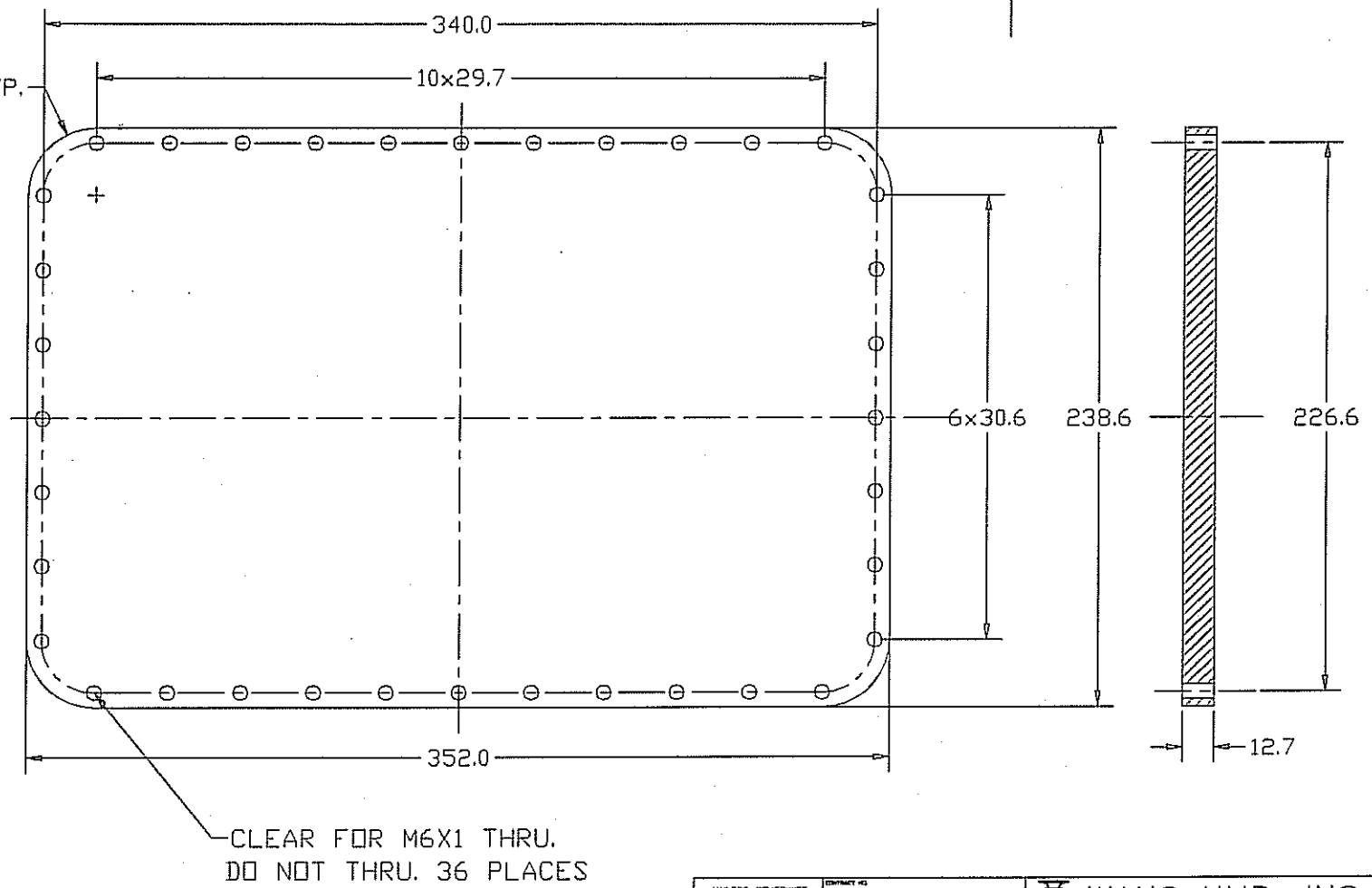

NOTES:
1) DIMENSIONS ARE IN mm
2) MATERIAL IS 1/2" THK. 6061T6 AL PLATE
3) QTY. 1

REVISIONS				
ZONE	REV	DESCRIPTION	DATE	APPROVED

UNLESS OTHERWISE SPECIFIED TOLERANCES:
.XXX ± .005
.XX ± .02

TREATMENT
FINISH
ACT. WT. | CALC. WT.

CONTRACT NO.
DRAWN | DATE
CHECK
DESIGN
DESIGN ACTIVITY
CUSTOMER

WANG NMR, INC.
550 North canyons Parkway, Livermore, CA 94550

TITLE: COVER

SIZE: C
DWG NO: MICE-3155
SCALE: DO NOT SCALE
RELEASE DATE
SHEET

2

Proprietary

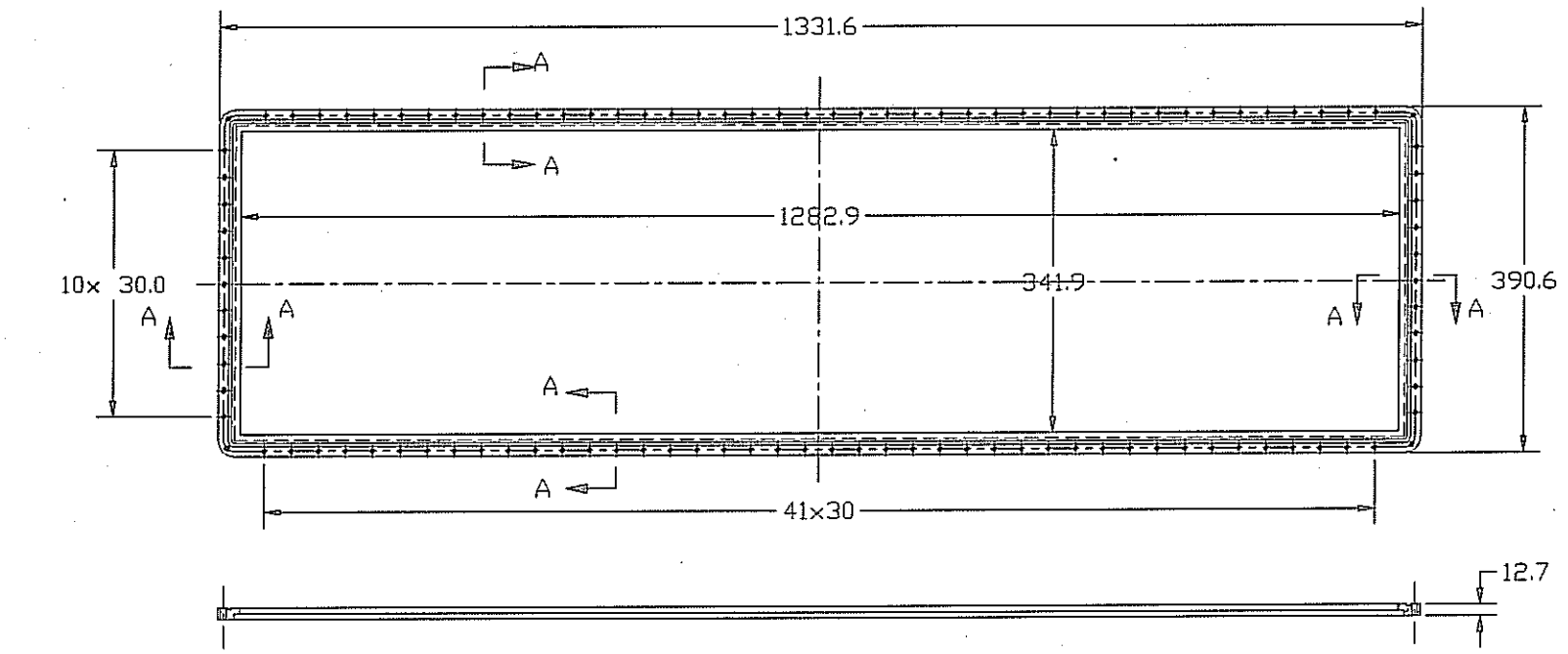

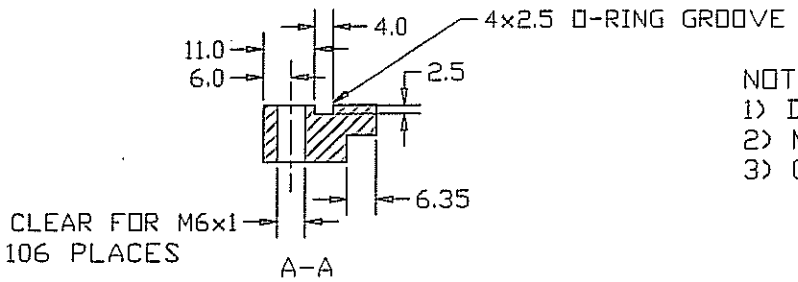

NOTES:
1) DIMENSIONS ARE IN mm
2) MATERIAL IS 304 S.S.
3) QTY. 1

WANG NMR, INC.
530 North canyons Parkway, Livermore, CA 94550

FLANGE

D MICE-3156

NO NOTE SCALE

Proprietary

REVISIONS				
ZONE	REV	DESCRIPTION	DATE	APPROVED

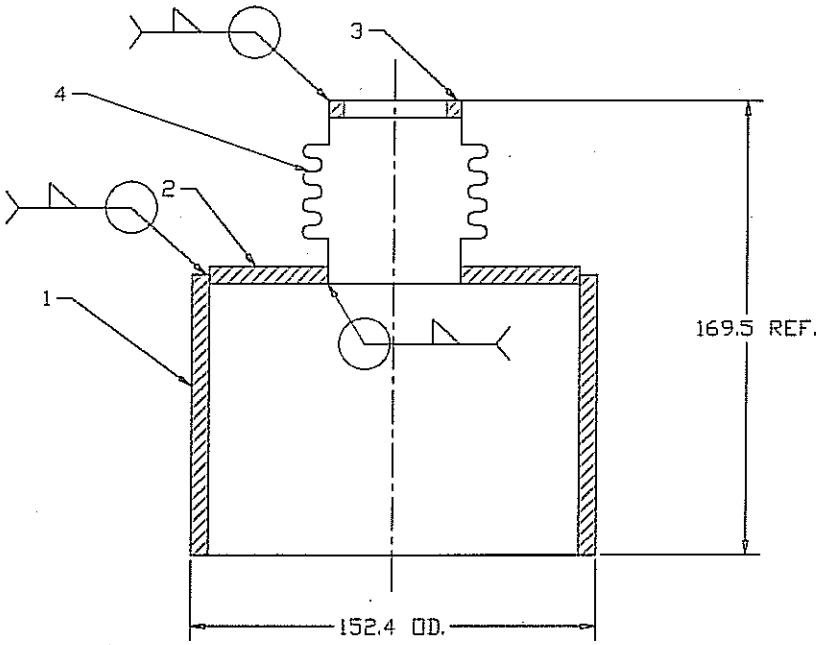

QTY.	ITEM	DWG. No.	DESCRIPTION	NOTE
1	4		KURTJ.LESKER BELLOW(MEW2001251E)	
1	3	MICE-3163	SEAL RING	
1	2	MICE-3162	DISC	
1	1	MICE-3161	TUBE	

NOTES:
1) DIMENSIONS ARE IN mm
2) MATERIAL IS 304 S.S.

UNLESS OTHERWISE SPECIFIED TOLERANCES:
.XXX ± .005
.XX ± .02

WANG NMR, INC.
550 North canyons Parkway, Livermore, CA 94550

TITLE: LHe TRANSFER TOWER

SIZE: C

DWG NO: MICE-3160

SCALE: DO NOT SCALE

Proprietary

REVISIONS				
ZONE	REV	DESCRIPTION	DATE	APPROVED

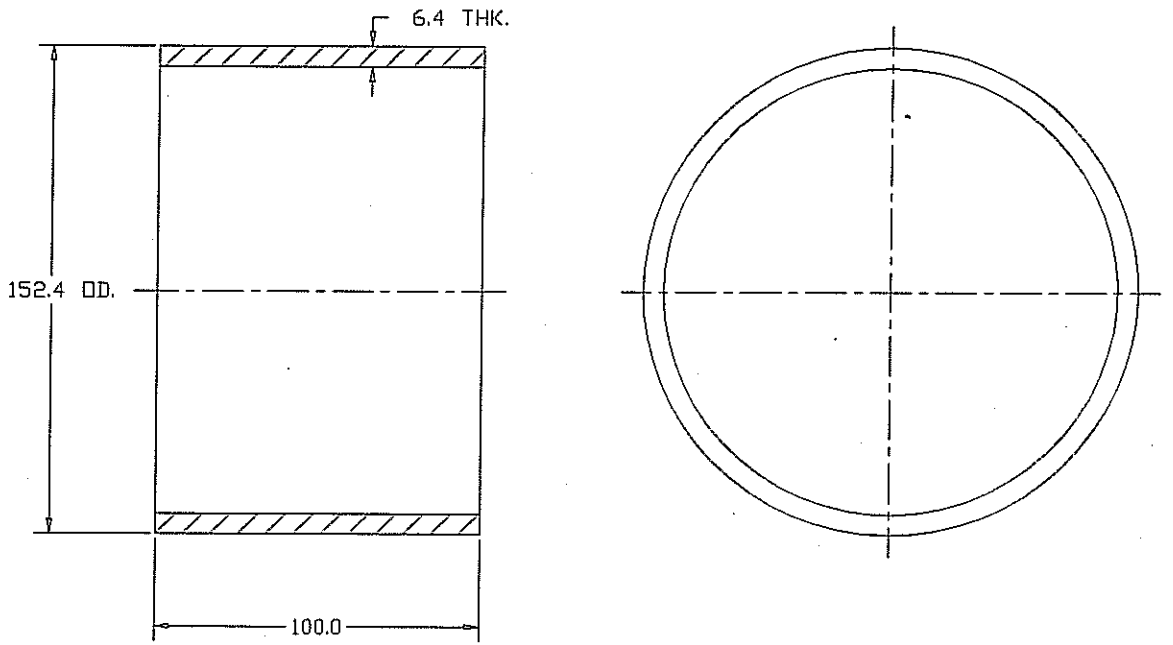

NOTES:
1) DIMENSIONS ARE IN mm
2) MATERIAL IS 6" OD. 0.25" WALL 304 S.S. TUBE
3) QTY. 1

UNLESS OTHERWISE SPECIFIED TOLERANCES:
.XXX ± .005
.XX ± .02

TREATMENT
FINISH
ACT. WT. CALC. WT.

CONTRACT NO.
DRAWN DATE
CHECK
DESIGN
DESIGN ACTIVITY
ENGINEER

WANG NMR, INC.
550 North canyons Parkway, Livermore, CA 94550

TITLE: TUBE

SIZE: C
DWG NO.: MICE-3161
SCALE: DO NOT SCALE
RELEASE DATE
SHEET

Proprietary

REVISIONS				
ZONE	REV	DESCRIPTION	DATE	APPROVED

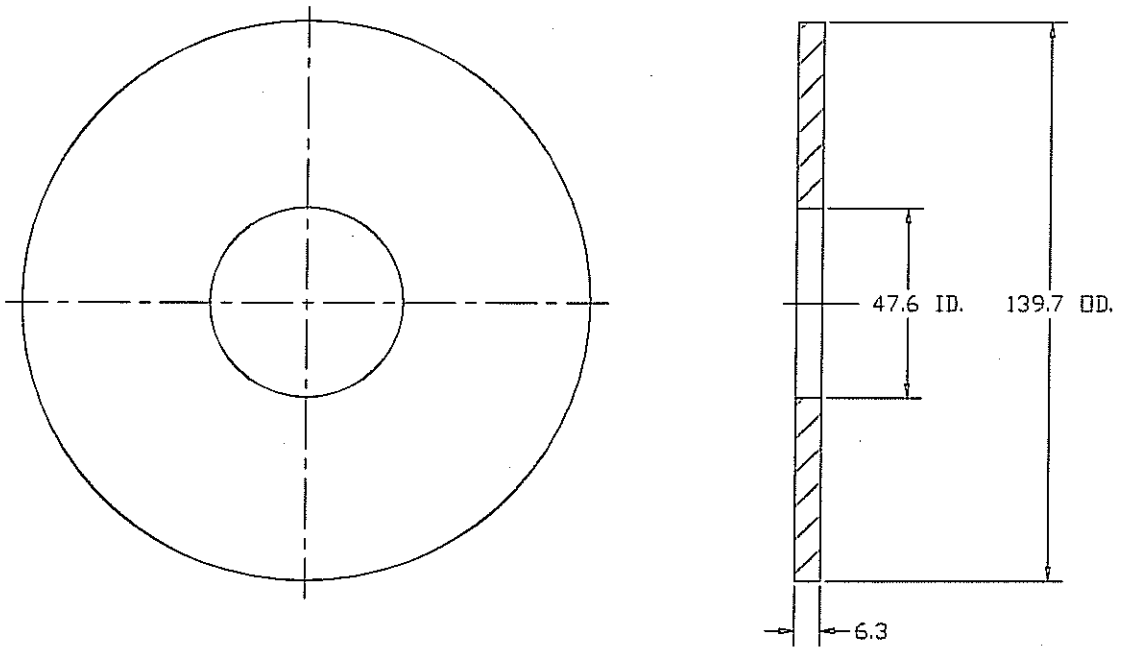

NOTES:
1) DIMENSIONS ARE IN mm
2) MATERIAL IS 1/4" THK. 304 S.S. PLATE
3) QTY. 1

UNLESS OTHERWISE SPECIFIED TOLERANCES:
.XXX ± .005
.XX ± .02

TREATMENT
FINISH
ACT. WT. CALC. WT.

CONTRACT NO.
DRAWN DATE
CHECK
DESIGN
DESIGN ACTIVITY
CUSTOMER

WANG NMR, INC.
550 North canyons Parkway, Livermore, CA 94550

TITLE: DISC

SIZE: C
DWG NO.: MICE-3162
SCALE: DO NOT SCALE
RELEASE DATE
SHEET

Proprietary

REVISIONS				
ZONE	REV	DESCRIPTION	DATE	APPROVED

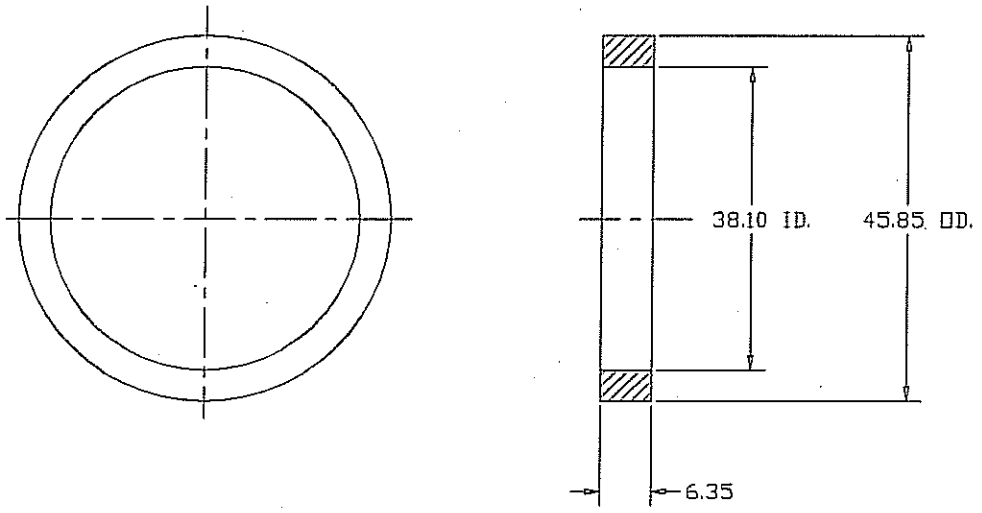

NOTES:
1) DIMENSIONS ARE IN mm
2) MATERIAL IS 304 S.S.
3) QTY. 1

UNLESS OTHERWISE SPECIFIED TOLERANCES:
.XXX ± .005
.XX ± .02

TREATMENT
FINISH
ACT. WT. CALC. WT.

CONTRACT NO.
DRAWN DATE
CHECK
REVIEW
DESIGN ACTIVITY
CUSTOMER

WANG NMR, INC.
550 North canyons Parkway, Livermore, CA 94550

TITLE
VACUUM SEAL RING

SIZE C
DWG NO. MICE-3163
SCALE DO NOT SCALE
RELEASE DATE
SHEET

Proprietary

REVISIONS				
ZONE	REV	DESCRIPTION	DATE	APPROVED

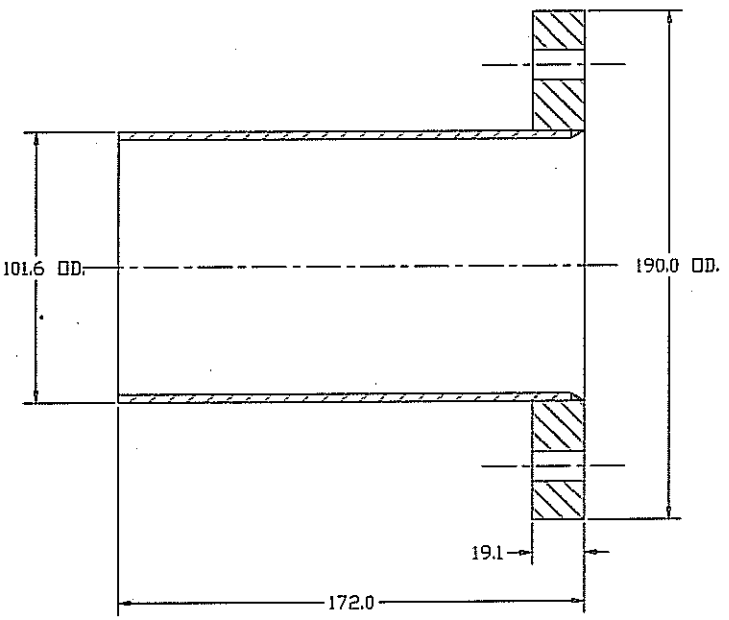

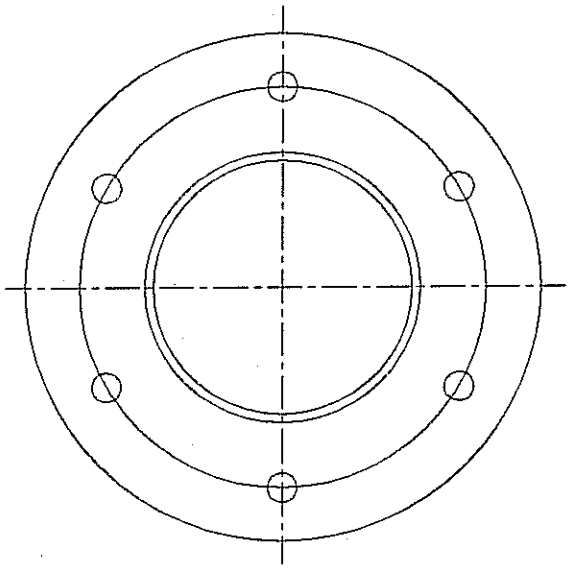

NOTES:
1) DIMENSIONS ARE IN mm
2) MATERIAL IS 304 S.S.
3) QTY. 2

UNLESS OTHERWISE SPECIFIED TOLERANCES:
.XXX ± .005
.XX ± .02

TREATMENT
FINISH
ACT. WT. CALC. WT.

CONTRACT NO.
DRAWN DATE
CHECK
DESIGN
DESIGN ACTIVITY
CUSTOMER

WANG NMR, INC.
550 North canyons Parkway, Livermore, CA 94550

TITLE
FLANGE

SIZE C
DWG NO. MICE-3170
SCALE DO NOT SCALE
RELEASE DATE
SHEET

Proprietary

REVISIONS				
ZONE	REV	DESCRIPTION	DATE	APPROVED

1)HOLE CIRCLE DIAMETER & THE NUMBER OF BOLT HOLES FOR TOP HAT FLANGE T.B.D.
2) SURFACE FINISH FOR TOP HAT FLANGE TO SUIT O-RING SEAL

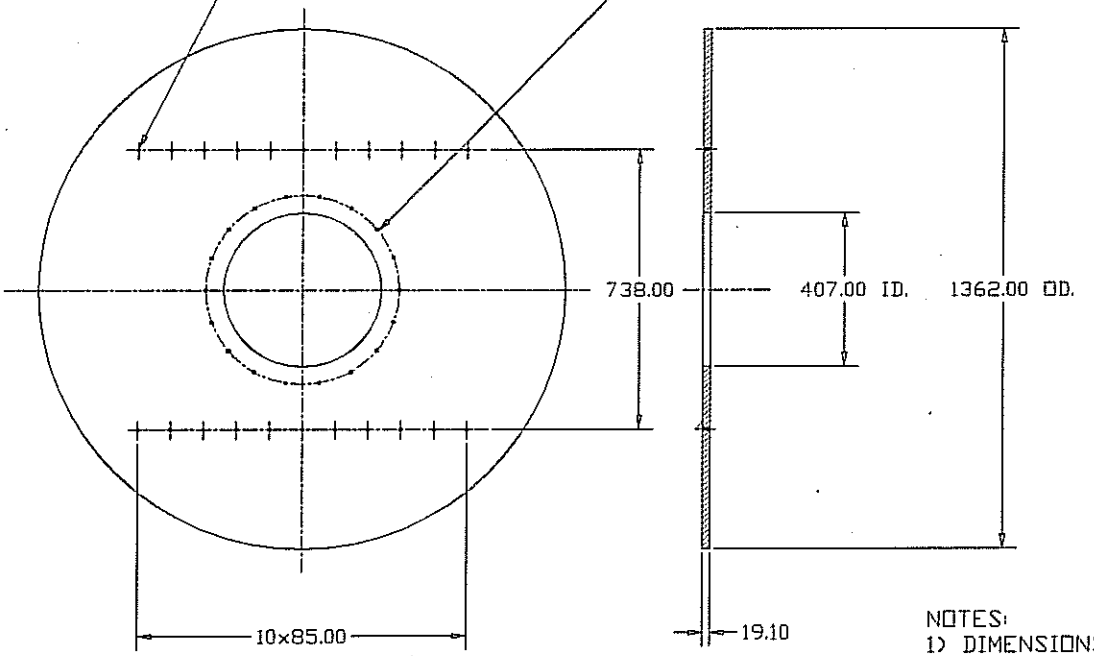

NOTES:
1) DIMENSIONS ARE IN mm
2) MATERIAL IS 3/4" THK. 304 S.S. PLATE
3) QTY. 1

UNLESS OTHERWISE SPECIFIED TOLERANCES:
.XXX ± .005
.XX ± .02

TREATMENT
FINISH
ACT. WT. CALC. WT.

CONTRACT NO.
DRAWN DATE
CHECK
DESIGN
DESIGN ACTIVITY
CUSTOMER

WANG NMR, INC.
550 North canyons Parkway, Livermore, CA 94550

TITLE: BACK END PLATE

SIZE: C
DWG NO: MICE-3200
SCALE: DO NOT SCALE
RELEASE DATE
SHEET

Proprietary

REVISIONS				
ZONE	REV	DESCRIPTION	DATE	APPROVED

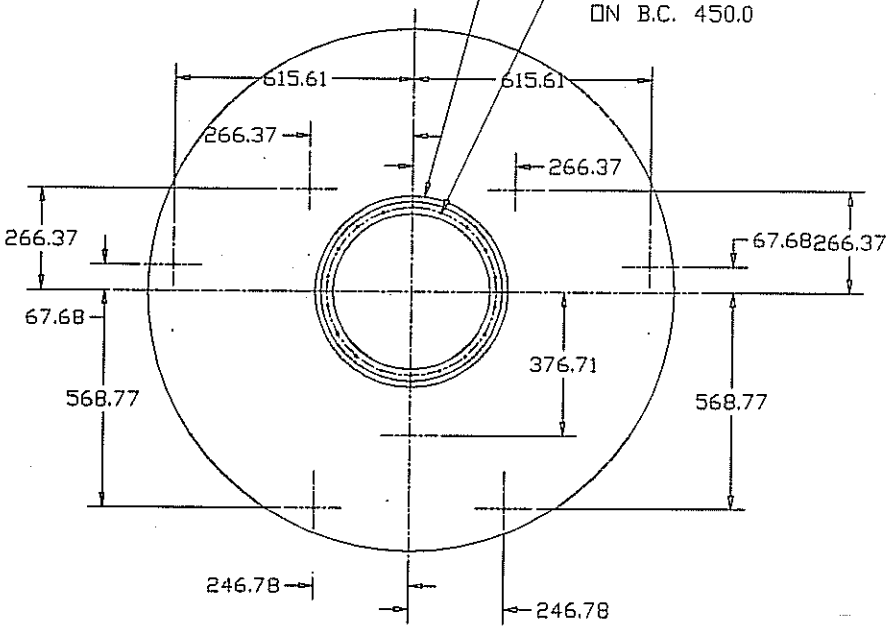

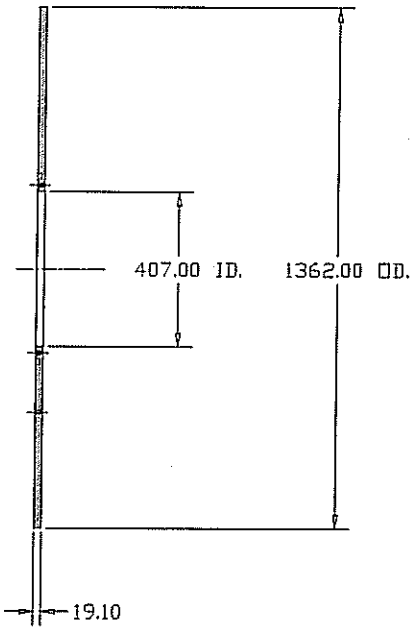

NOTES:
1) DIMENSIONS ARE IN mm
2) MATERIAL IS 3/4" THK. 304 S.S. PLATE
3) QTY. 1

UNLESS OTHERWISE SPECIFIED TOLERANCES:
.XXX ± .005
.XX ± .02

TREATMENT
FINISH
ACT. WT. CALC. WT.

WANG NMR, INC.
550 North canyons Parkway, Livermore, CA 94550

TITLE: FRONT END PLATE

SIZE: C
DWG NO: MICE-3300
SCALE: DO NOT SCALE

Proprietary

REVISIONS				
ZONE	REV	DESCRIPTION	DATE	APPROVED

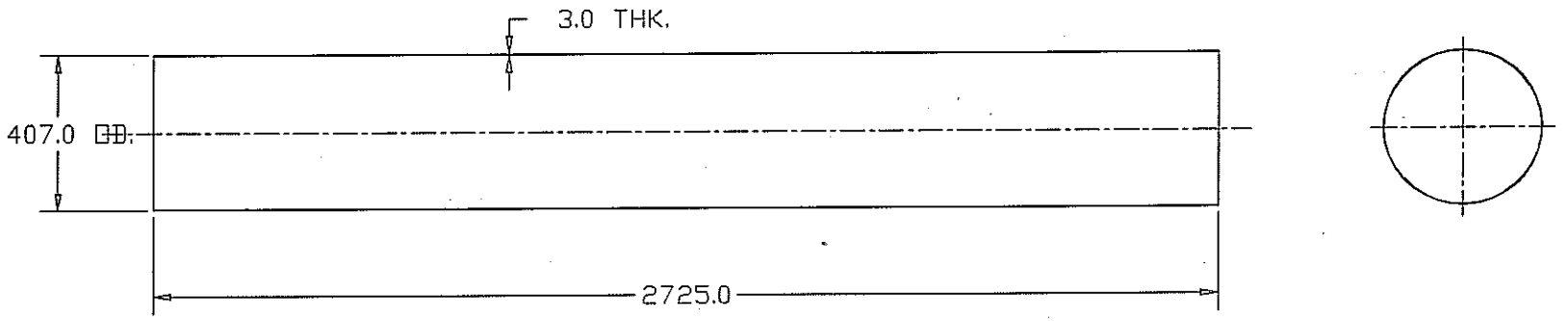

NOTES:
1) DIMENSIONS ARE IN mm
2) MATERIAL IS 304 S.S.
3) QTY. 1

UNLESS OTHERWISE SPECIFIED TOLERANCES: .XXX ± .005 .XX ± .02	CONTRACT NO.	
	DRAWN	DATE
	CHECK	
TREATMENT	DESIGN	
FINISH	DESIGN ACTIVITY	
ACT. WT. / CALC. WT.	CUSTOMER	

WANG NMR, INC.
550 North canyons Parkway, Livermore, CA 94550

TITLE: CENTER TUBE

SIZE: C

DWG NO: MICE-3400

SCALE: DO NOT SCALE

RELEASE DATE

SHEET

Proprietary

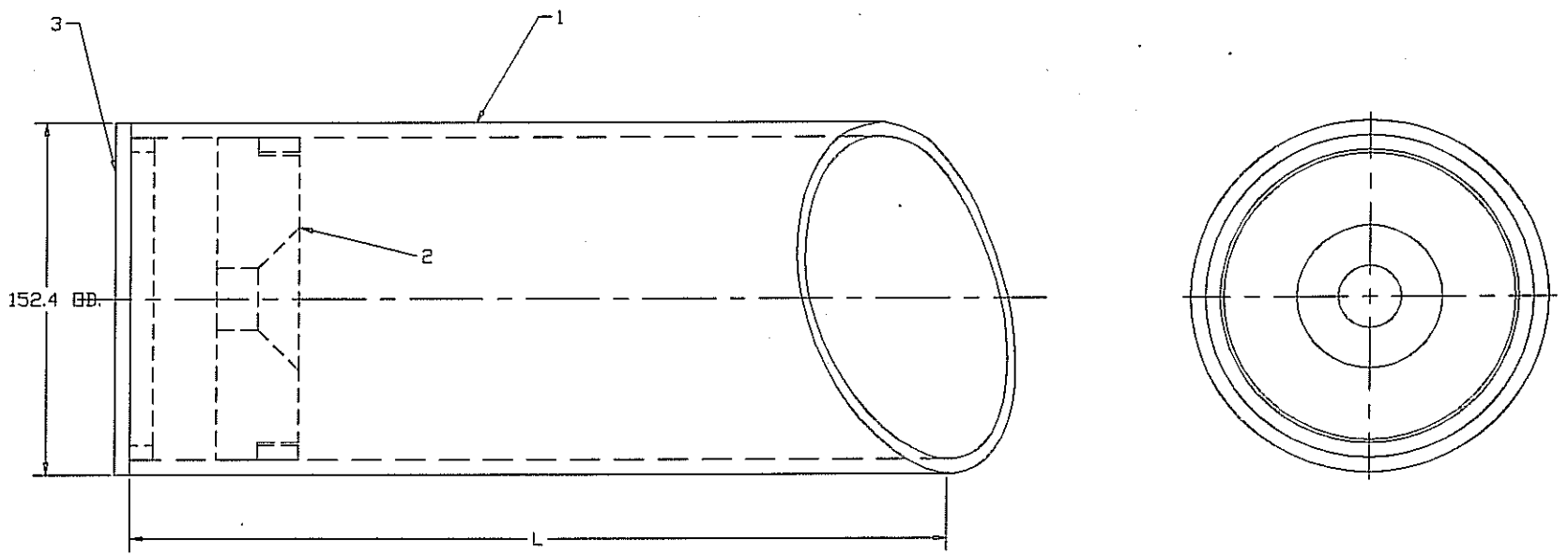

NOTES:
1) DIMENSIONS ARE IN mm
2) QTY REQ. 8 SET

QTY.	ITEM	DWG. No.	DESCRIPTION	NOTE
1	3	MICE-3530	VACUUM SEAL COVER	304 S.S.
1	2	MICE-3520	SUPPORT PLATE	304 S.S.
1	1	MICE-3510	SUPPORT TUBE	304 S.S.

WANG NMR, INC.
COLD MASS SUPPORT
D MICE-3500

Proprietary

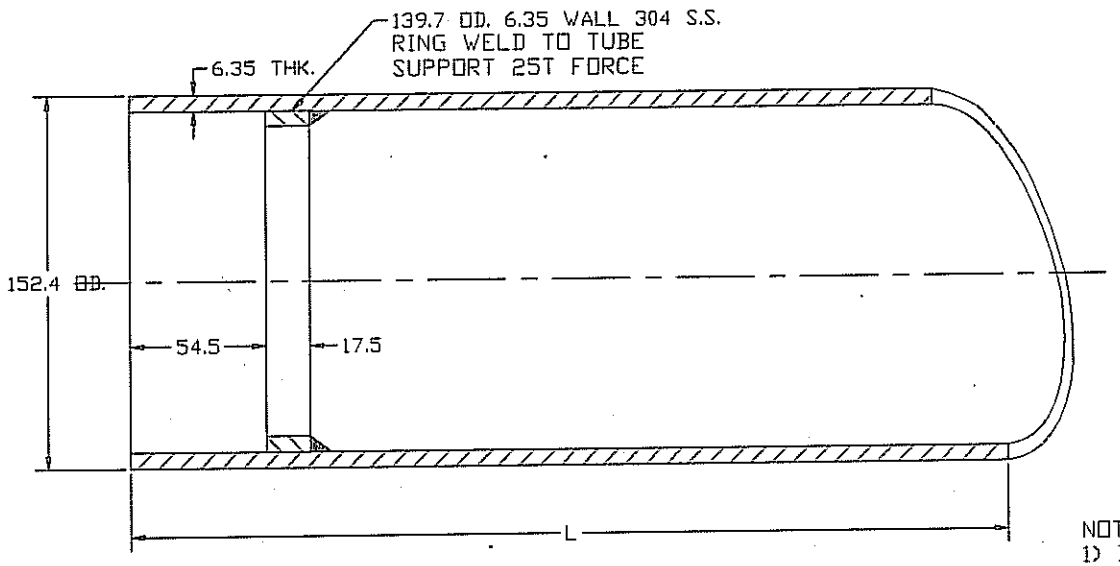

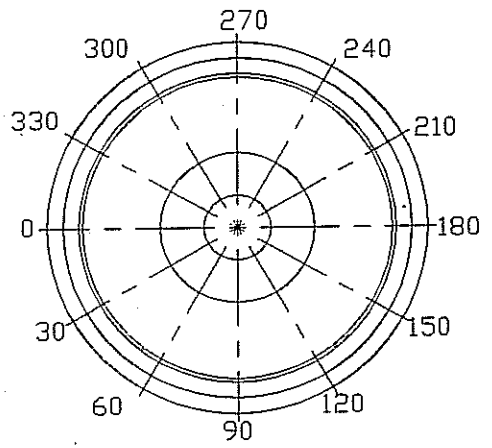

NOTES:
1) DIMENSIONS ARE IN mm
2) MATERIAL IS 6" OD. 0.25" WALL 304 S.S. TUBE

TYPE	QTY.	L											
		0	30	60	90	120	150	180	210	240	270	300	330
1	4	248.8	302.2	326.7	352.1	369.5	378.4	375.3	362.6	343.6	322.3	299.2	286.7
2	4	248.8	286.7	299.2	322.3	343.6	362.6	375.3	378.4	369.5	352.1	326.7	302.2

UNLESS OTHERWISE SPECIFIED TOLERANCES:

WANG NMR, INC.
330 North Canyons Parkway, Livermore, CA 94550

SUPPORT TUBE

D MICE-3510

DO NOT SCALE

Proprietary

REVISIONS				
ZONE	REV	DESCRIPTION	DATE	APPROVED

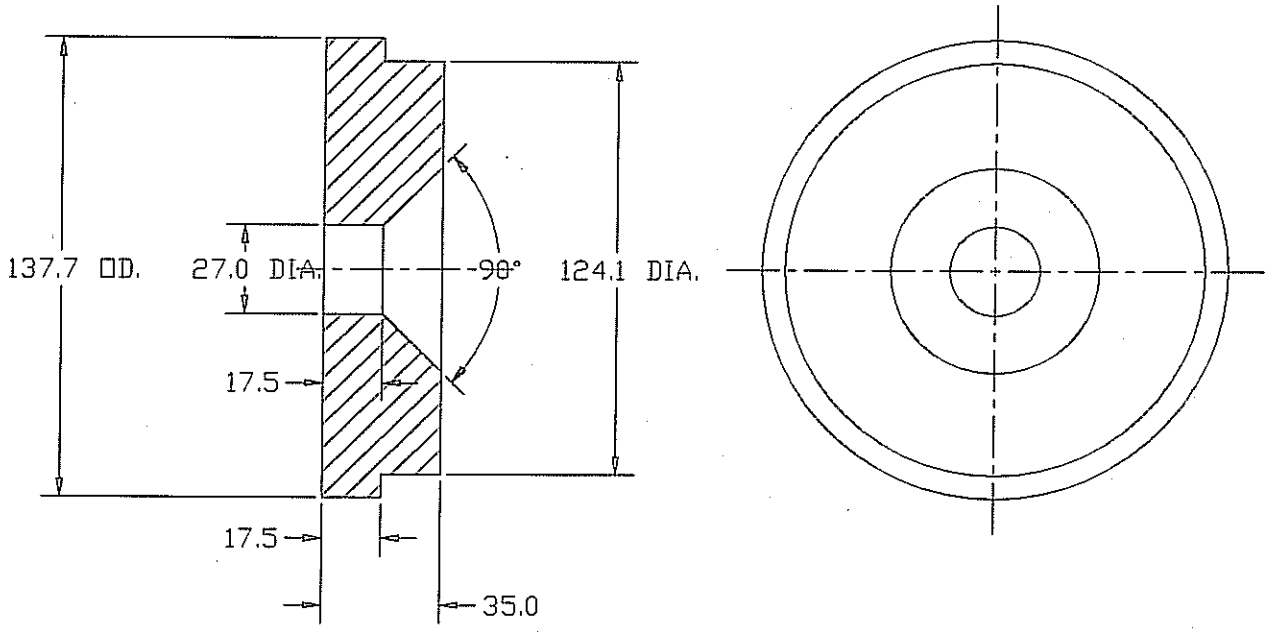

NOTES:
1) DIMENSIONS ARE IN mm
2) MATERIAL IS 1-3/8" THK. 304 S.S. PLATE
3) QTY. 8

UNLESS OTHERWISE SPECIFIED TOLERANCES:
.XXX ± .005
.XX ± .02

TREATMENT
FINISH
ACT. WT. CALC. WT.

CONTRACT NO.
DRAWN DATE
CHECK
DESIGN
DESIGN ACTIVITY
CUSTOMER

WANG NMR, INC.
550 North canyons Parkway, Livermore, CA 94550

TITLE
SUPPORT PLATE

SIZE C
DWG NO. MICE-3520
SCALE DO NOT SCALE
RELEASE DATE
SHEET

Proprietary

REVISIONS				
ZONE	REV	DESCRIPTION	DATE	APPROVED

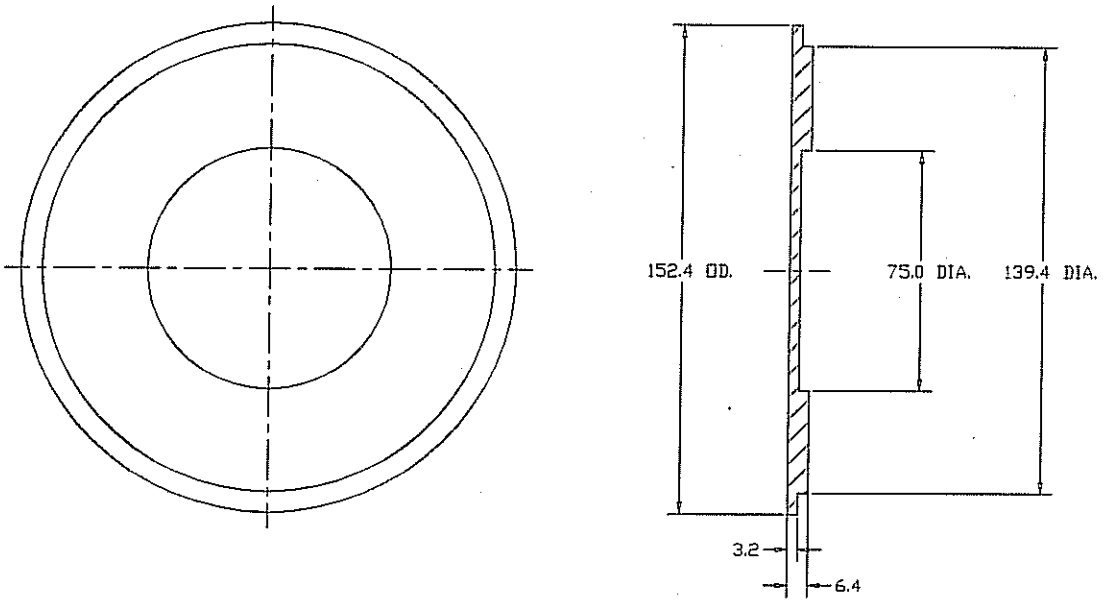

NOTES:
1) DIMENSIONS ARE IN mm
2) MATERIAL IS 304 S.S.
3) QTY. 8

UNLESS OTHERWISE SPECIFIED TOLERANCES:
.XXX ± .005
.XX ± .02

TREATMENT
FINISH
ACT. WT. CALC. WT.

CONTRACT NO.
DRAWN DATE
CHECK
DESIGN
DESIGN ACTIVITY
CUSTOMER

WANG NMR, INC.
550 North canyons Parkway, Livermore, CA 94550

TITLE
VACUUM SEAL COVER

SIZE C
DWG NO. MICE-3530
SCALE DO NOT SCALE
RELEASE DATE
SHEET

Proprietary

REVISIONS				
ZONE	REV	DESCRIPTION	DATE	APPROVED

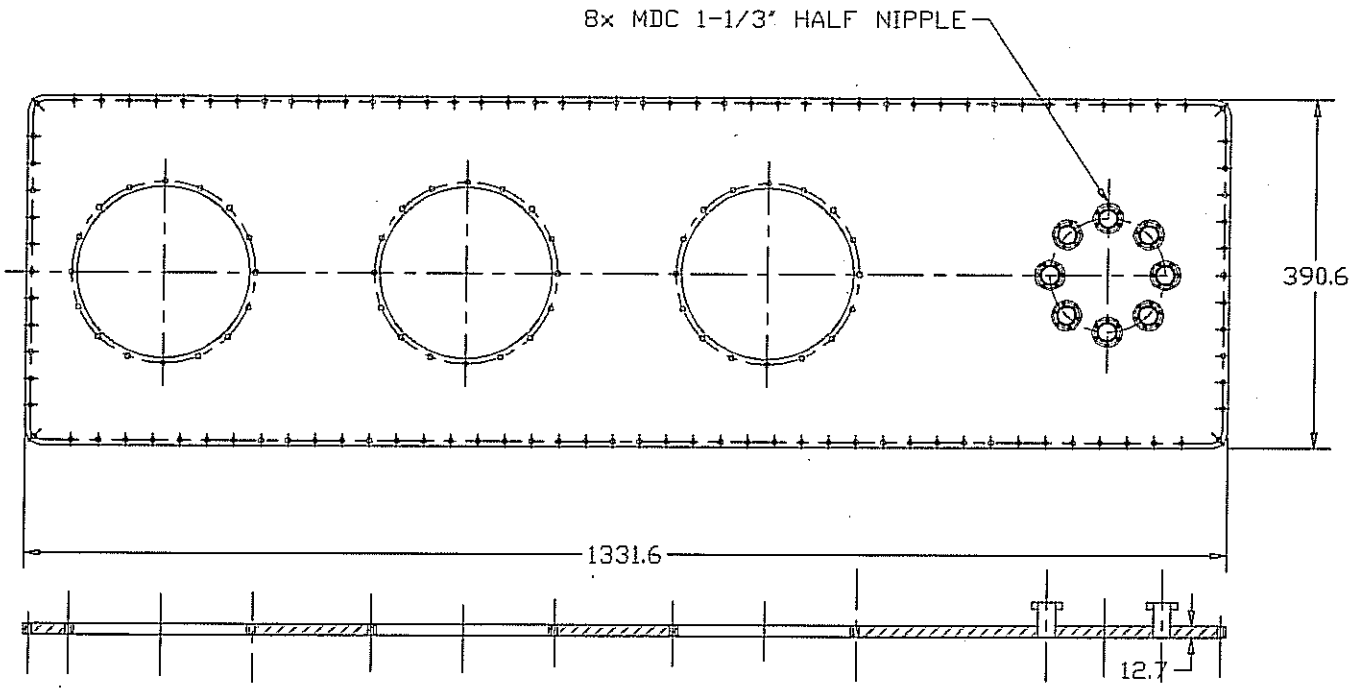

NOTES:
1) DIMENSIONS ARE IN mm
2) MATERIAL IS 0.5" THK. 304 S.S. PLATE
3) QTY. 1

UNLESS OTHERWISE SPECIFIED TOLERANCES: .XXX ± .005 .XX ± .02	CONTRACT NO	WANG NMR, INC. 550 North canyons Parkway, Livermore, CA 94550
	DRAWN / DATE	TITLE: CRYOCOOLER MOUNTING PLATE
	CHECK	
TREATMENT	PERSON	
FINISH	DESIGN ACTIVITY	SIZE: C / DWG NO: MICE-3600
ACT. WT. / CALC. WT.	CUSTOMER	SCALE: DO NOT SCALE / REQUIRE DATE / SHEET

Proprietary

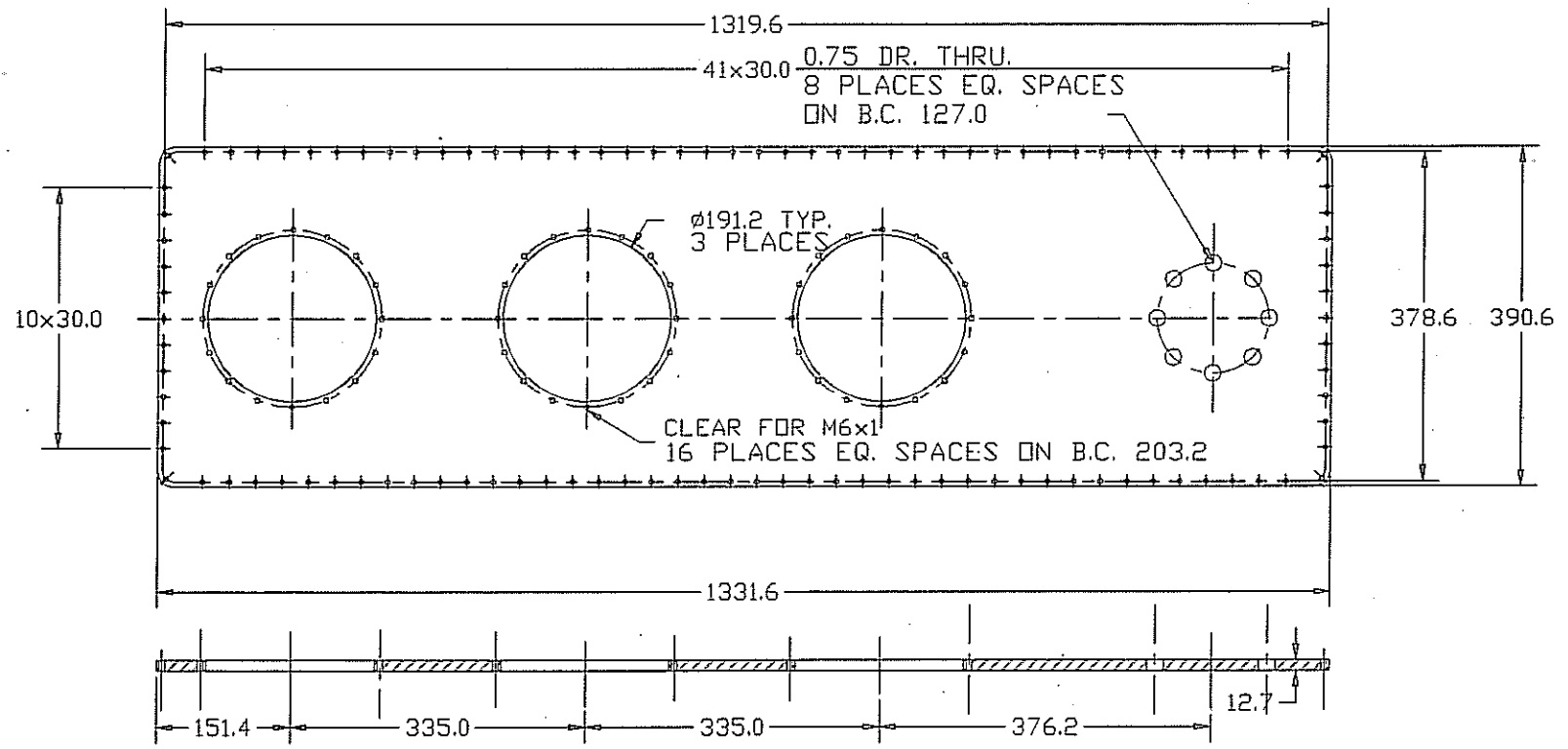

NOTES:
1) DIMENSIONS ARE IN mm
2) MATERIAL IS 0.5" THK. 304 S.S. PLATE
3) POLISH SURFACE FOR O-RING SEAL
4) QTY. 1

REVISIONS				
ZONE	REV	DESCRIPTION	DATE	APPROVED

UNLESS OTHERWISE SPECIFIED TOLERANCES:
.XXX ± .005
.XX ± .02

TREATMENT
FINISH
ACT. WT. CALC. WT.

WANG NMR, INC.
550 North canyons Parkway, Livermore, CA 94550

TITLE: CRYOCOOLER MOUNTING PLATE

SIZE: C
DWG NO: MICE-3600A
SCALE: DO NOT SCALE

Proprietary

REVISIONS				
ZONE	REV	DESCRIPTION	DATE	APPROVED

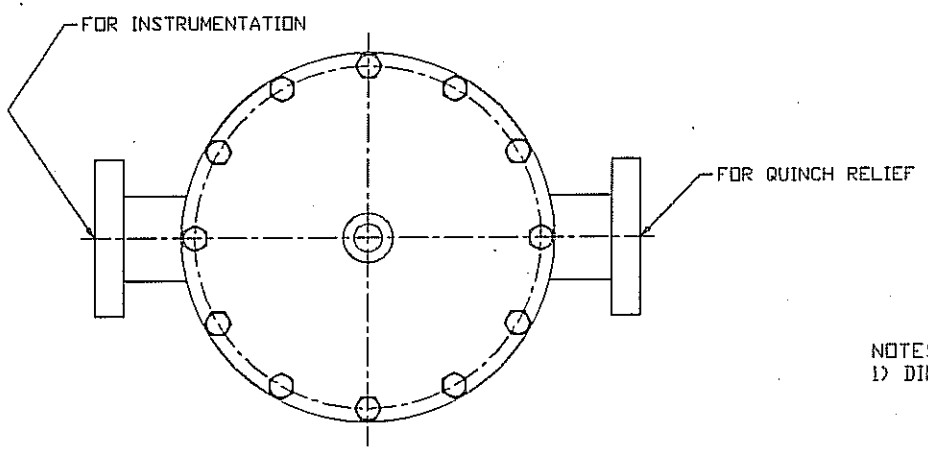

NOTES:
1) DIMENSIONS ARE IN mm

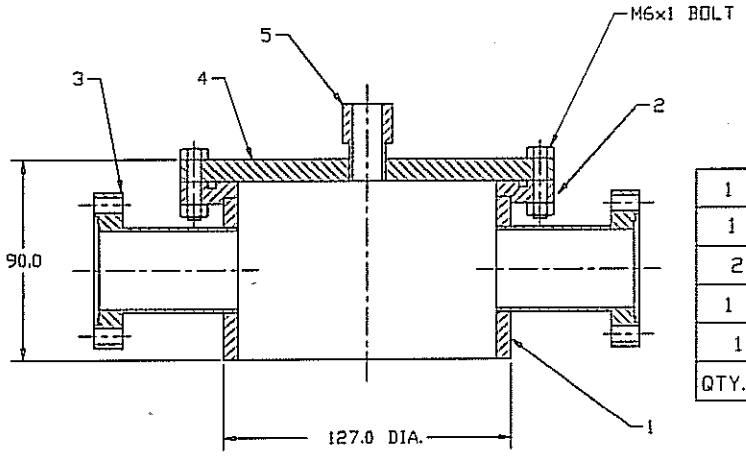

QTY.	ITEM	DWG. No.	DESCRIPTION	NOTE
1	5		MDC 1/2' QUICK DISCONNECTOR	S.S.
1	4	MICE-3730	COVER	304 S.S.
2	3		MDC 2-3/4' HALF NIPPLE	304 S.S.
1	2	MICE-3720	FLANGE	304 S.S.
1	1	MICE-3710	TUBE	304 S.S.

UNLESS OTHERWISE SPECIFIED TOLERANCES:
.XXX ± .005
.XX ± .02

TREATMENT
FINISH
ACT. WT. CALC. WT.

WANG NMR, INC.
550 North canyons Parkway, Livermore, CA 94550

TITLE: LHe TRANSFER TOWER

SIZE: C
DWG NO: MICE-3700
SCALE: DO NOT SCALE
RELEASE DATE
SHEET

Proprietary

REVISIONS				
ZONE	REV	DESCRIPTION	DATE	APPROVED

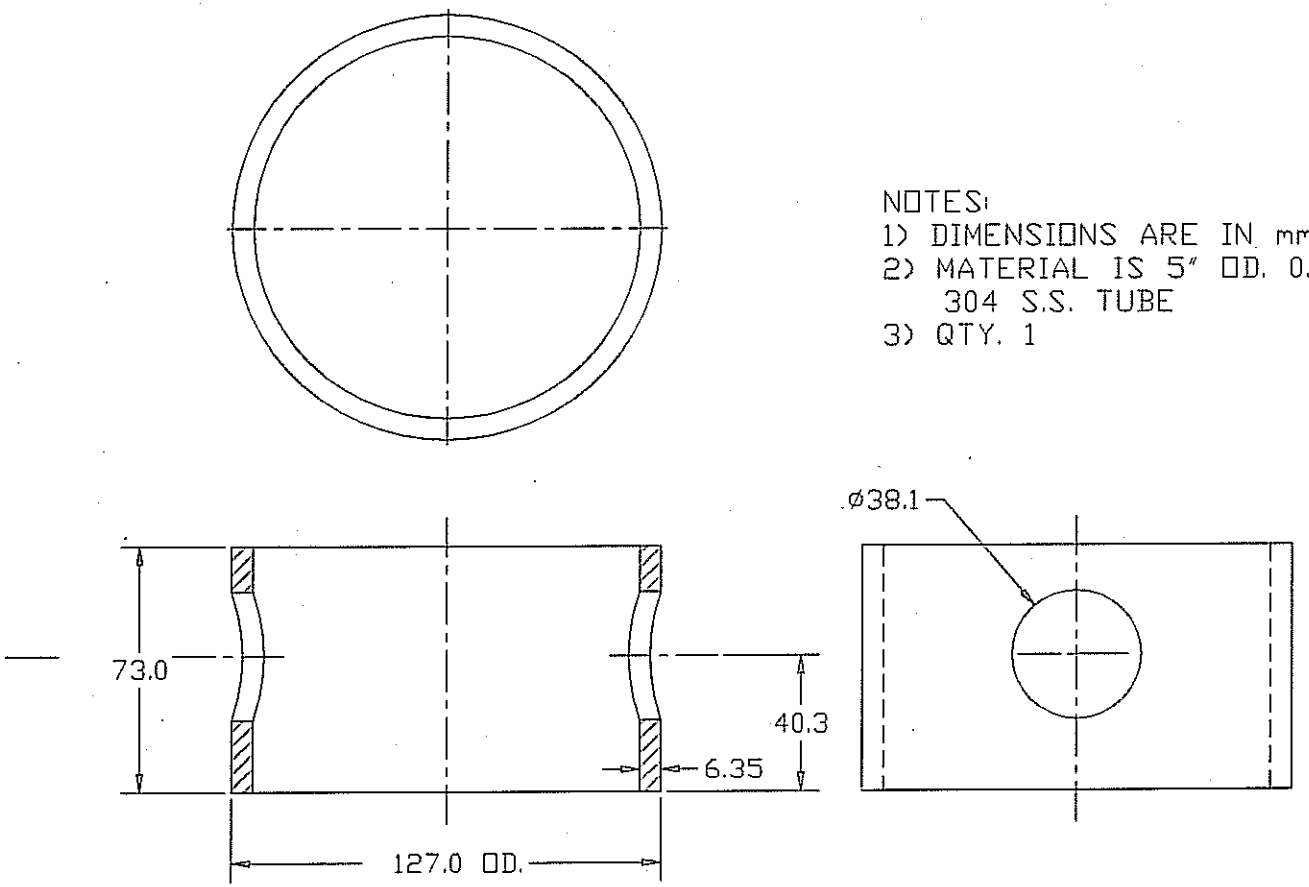

NOTES:
1) DIMENSIONS ARE IN mm
2) MATERIAL IS 5" OD. 0.25" WALL
304 S.S. TUBE
3) QTY. 1

UNLESS OTHERWISE SPECIFIED TOLERANCES:
.XXX ± .005
.XX ± .02

TREATMENT
FINISH
ACT. WT. CALC. WT.

WANG NMR, INC.
550 North canyons Parkway, Livermore, CA 94550

TITLE: TUBE

SIZE: C
DWG NO: MICE-3710
SCALE: DO NOT SCALE
RELEASE DATE
SHEET

Proprietary

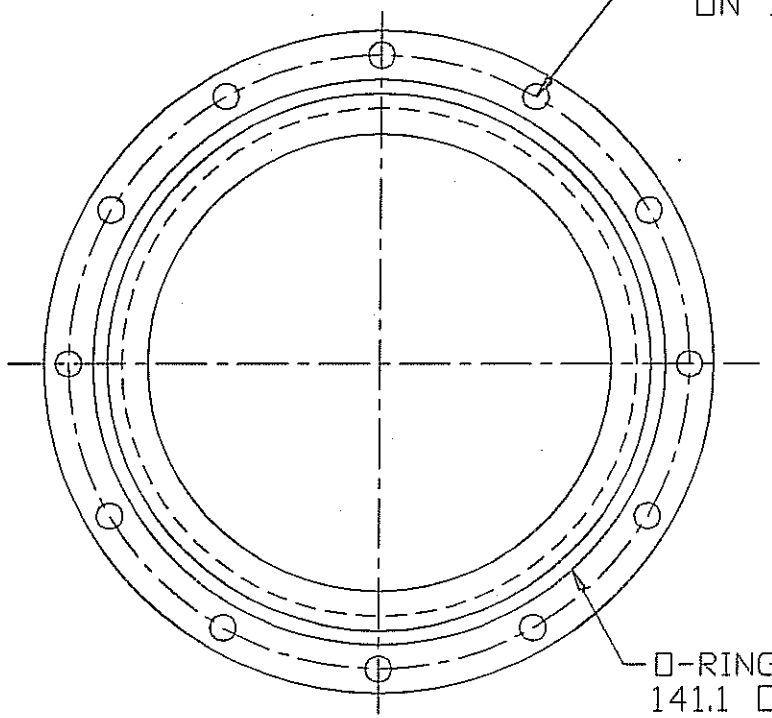

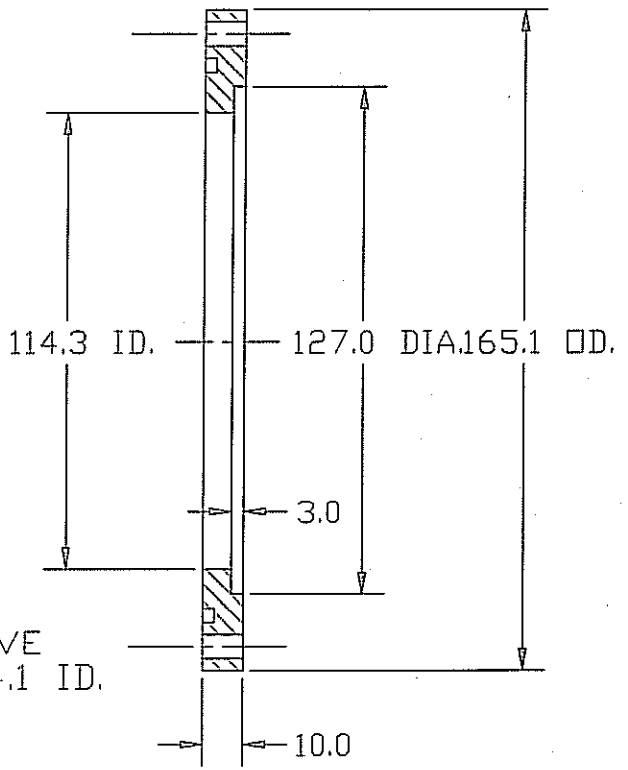

NOTES:
1) DIMENSIONS ARE IN mm
2) MATERIAL IS 304 S.S.
3) QTY.1

REVISIONS				
ZONE	REV	DESCRIPTION	DATE	APPROVED

UNLESS OTHERWISE SPECIFIED TOLERANCES:
.XXX ± .005
.XX ± .02

TREATMENT
FINISH
ACT. WT. CALC. WT.

WANG NMR, INC.
550 North canyons Parkway, Livermore, CA 94550

TITLE: FLANGE

SIZE: C
DWG NO: MICE-3720
SCALE: DO NOT SCALE
RELEASE DATE
SHEET

Proprietary

ZONE	REV	DESCRIPTION	DATE	APPROVED

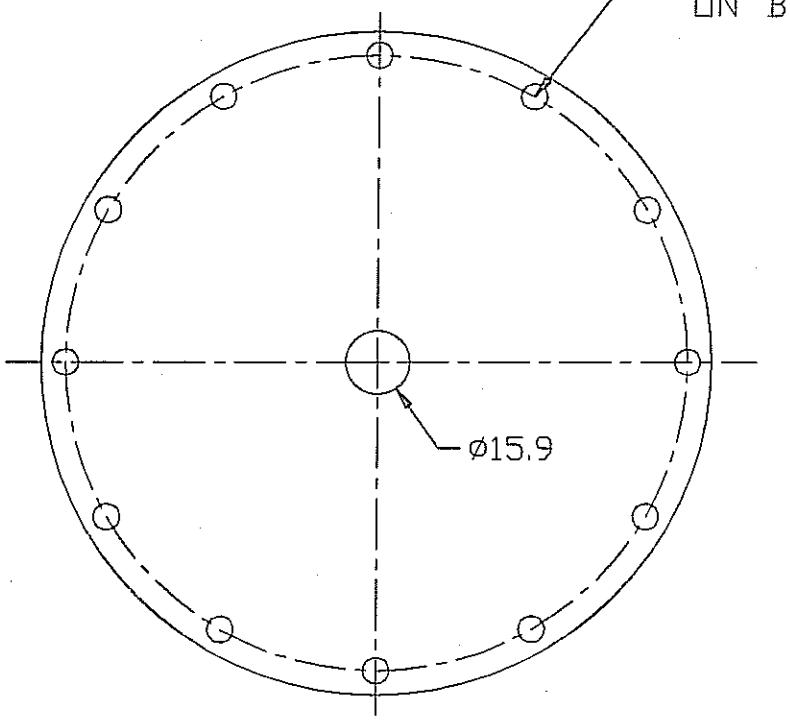

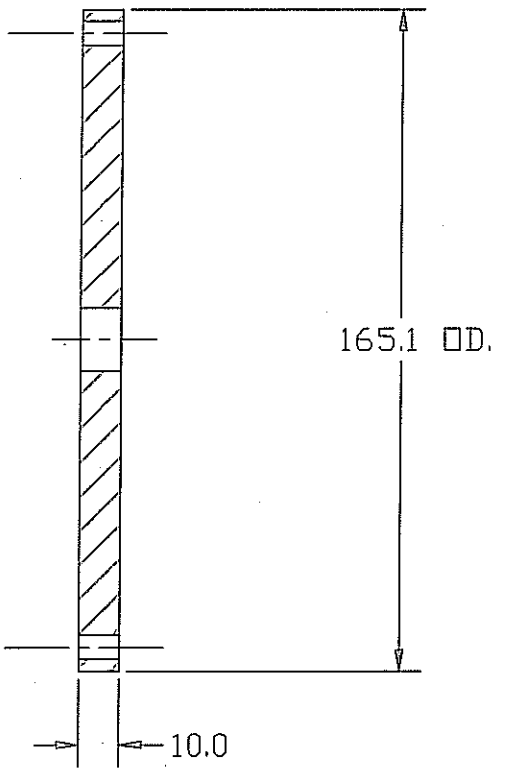

NOTES:
1) DIMENSIONS ARE IN mm
2) MATERIAL IS 304 S.S.
3) QTY.1

UNLESS OTHERWISE SPECIFIED TOLERANCES:
.XXX ± .005
.XX ± .02

TREATMENT
FINISH
ACT. WT. CALC. WT.

WANG NMR, INC.
550 North canyons Parkway, Livermore, CA 94550

TITLE: COVER PLATE

SIZE: C
DWG NO: MICE-3730
SCALE: DO NOT SCALE
RELEASE DATE
SHEET

Appendix III-3-2

Engineering Design Drawing For Magnet Support System

Wang NMR Inc.

• 550 North Canyons Parkway • Livermore, CA 94551

Proprietary

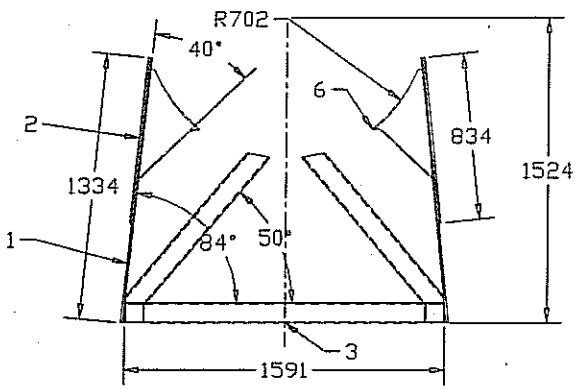

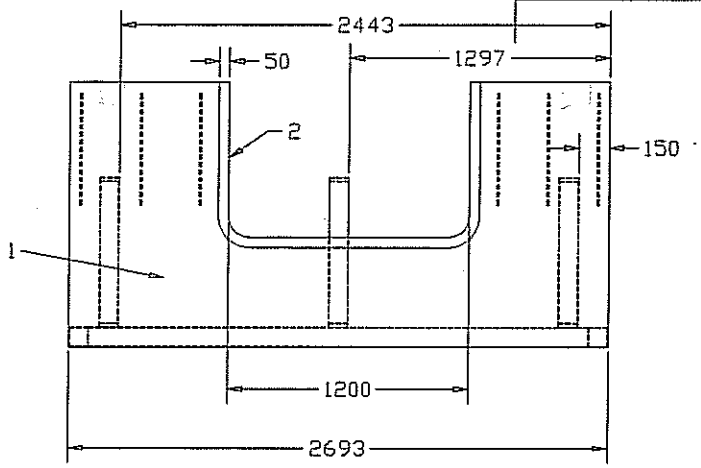

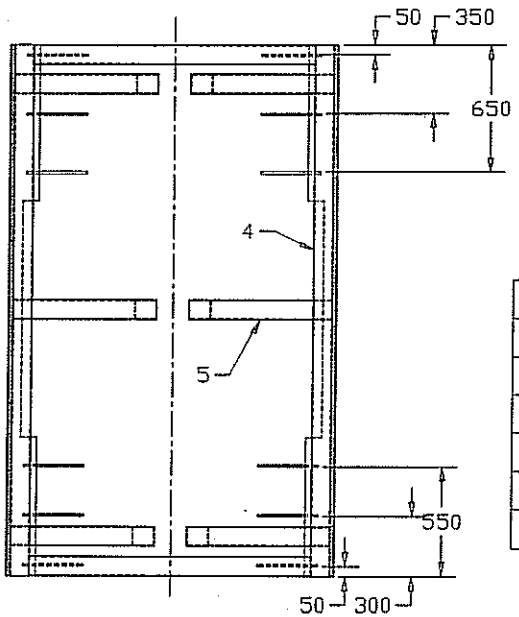

NOTES:
1) DIMENSIONS ARE IN mm
2) ALL CONTACT AREA WELDED

QTY.	ITEM	DWG. No.	DESCRIPTION	NOTE
12	6	MICE-F00 6	GUSSET PLATE	304 S.S.
6	5	MICE-F005	SQUARE 3	304 S.S.
2	4	MICE-F004	SQUARE 2	304 S.S.
2	3	MICE-F003	SQUARE 1	304 S.S.
2	2	MICE-F002	REINFORCE PLATE	304 S.S.
2	1	MICE-F001	PLATE	304 S.S.

UNLESS OTHERWISE SPECIFIED TOLERANCES:
.XXX ± .005
.XX ± .02

WANG NMR, INC.
550 North canyons Parkway, Livermore, CA 94550

SUPPORT STAND

C

MICE-F000

DO NOT SCALE

Proprietary

Proprietary

REVISIONS				
ZONE	REV	DESCRIPTION	DATE	APPROVED

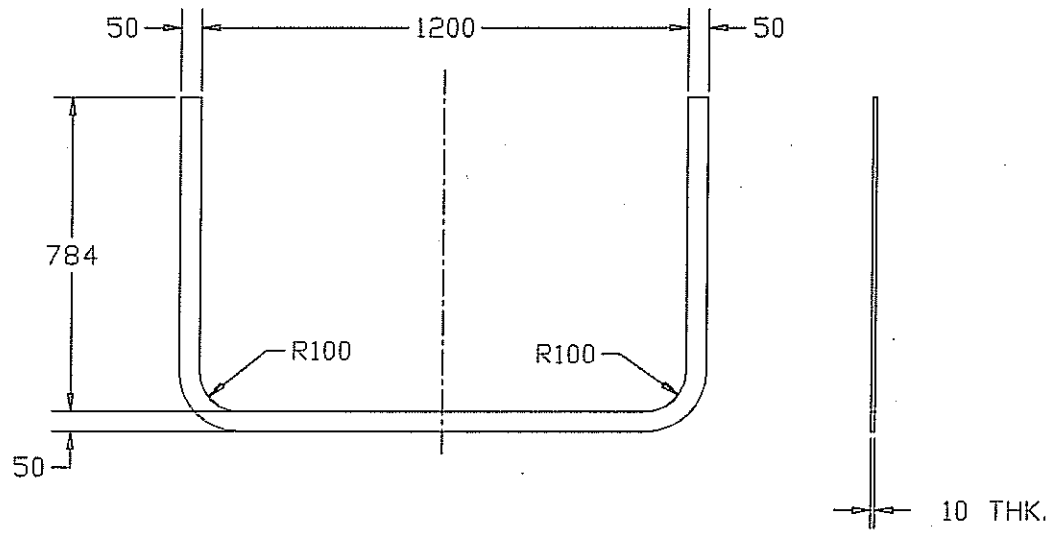

NOTES:
1) DIMENSIONS ARE IN mm
2) MATERIAL IS 3/8" THK. 304 S.S. PLATE
3) QTY. 2

UNLESS OTHERWISE SPECIFIED TOLERANCES:
.XXX ± .005
.XX ± .02

TREATMENT
FINISH
ACT. WT. CALC. WT.

CONTRACT NO.
DRAWN DATE
CHECK
DESIGN
DESIGN ACTIVITY
CUSTOMER

WANG NMR, INC.
550 North canyons Parkway, Livermore, CA 94550

TITLE
REINFORCE PLATE

SIZE C
DWG NO. MICE-F002
SCALE DO NOT SCALE
RELEASE DATE
SHEET

Proprietary

REVISIONS				
ZONE	REV	DESCRIPTION	DATE	APPROVED

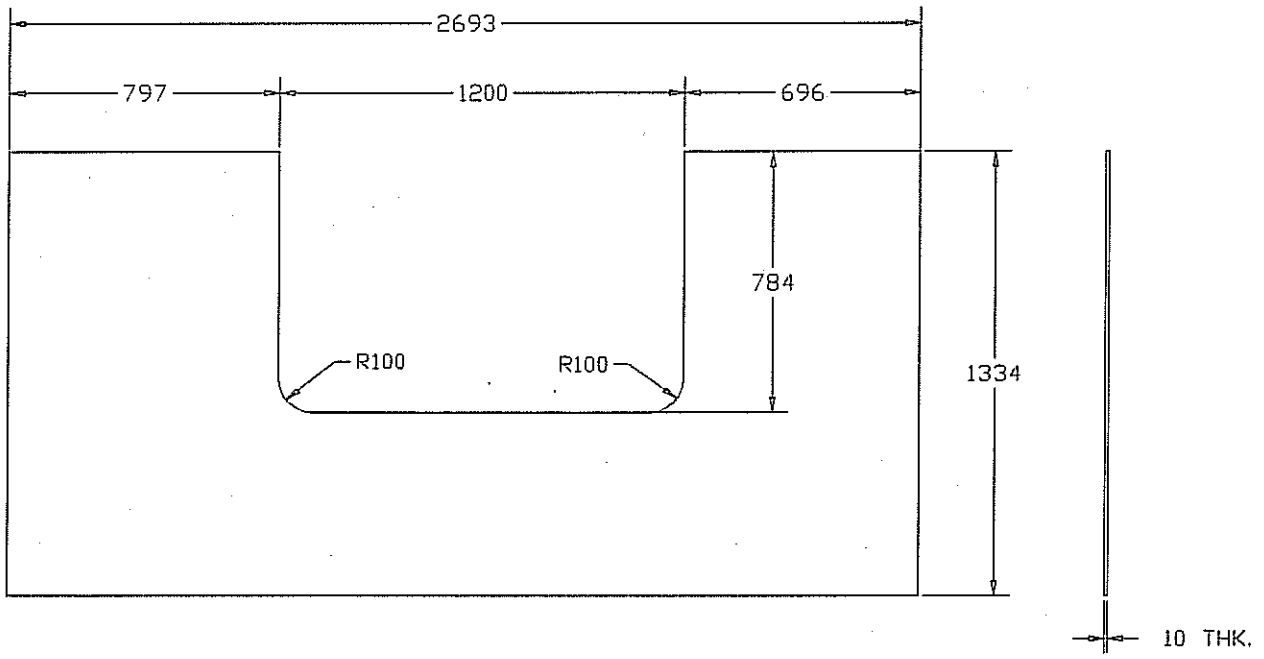

NOTES:
1) DIMENSIONS ARE IN mm
2) MATERIAL IS 3/8" THK. 304 S.S. PLATE
3) QTY. 2

UNLESS OTHERWISE SPECIFIED TOLERANCES:
.XXX ± .005
.XX ± .02

TREATMENT
FINISH
ACT. WT. | CALC. WT.

CONTRACT NO.
DRAWN | DATE
CHECK
DESIGN
DESIGN ACTIVITY
CUSTOMER

WANG NMR, INC.
550 North canyons Parkway, Livermore, CA 94550

TITLE
PLATE

SIZE C
DWG NO. MICE-F001
SCALE DO NOT SCALE
RELEASE DATE
SHEET

Proprietary

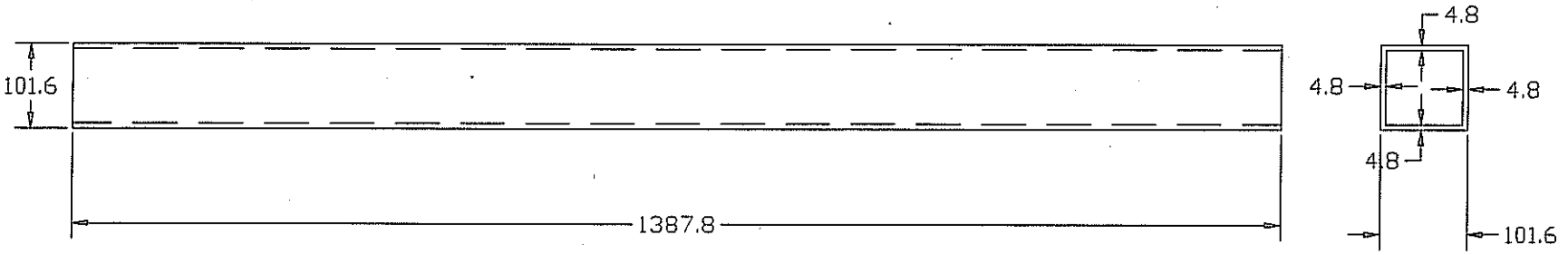

NOTES:
1) DIMENSIONS ARE IN mm
2) MATERIAL IS 4"x4" □D. 0.188" WALL 304 S.S. SHAPE
3) QTY. 2

WANG NMR, INC.
550 North Canyons Parkway, Livermore, CA 94550

SQUARE 1

D MICE-F003

Proprietary

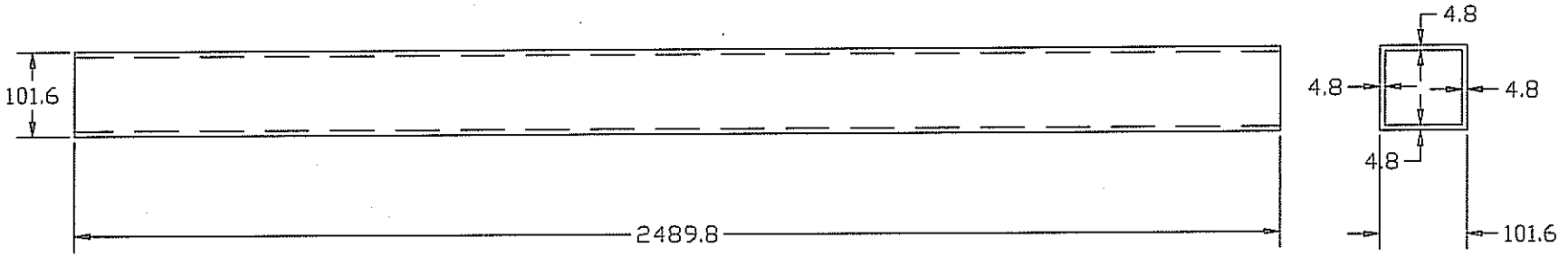

NOTES:
1) DIMENSIONS ARE IN mm
2) MATERIAL IS 4"x4" OD. 0.188" WALL 304 S.S. SHAPE
3) QTY. 2

WANG NMR, INC.
550 North canyons Parkway, Livermore, CA 94550

SQUARE 2

D MICE-F004

Proprietary

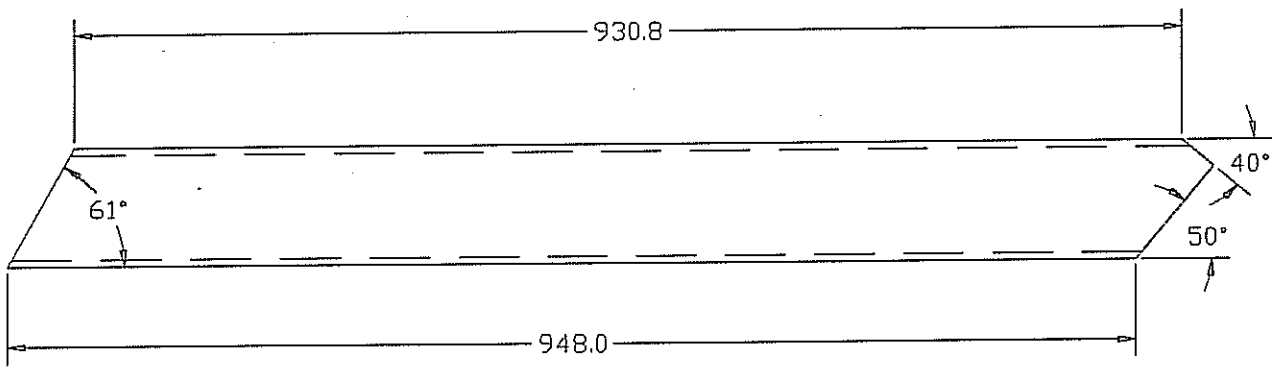

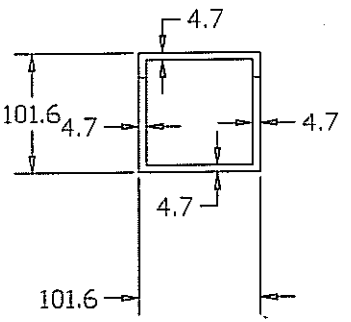

NOTES:
1) DIMENSIONS ARE IN mm
2) MATERIAL IS 4"×4" □D. 0.188" WALL 304 S.S. SHAPE
3) QTY. 6

UNLESS OTHERWISE SPECIFIED TOLERANCES:

WANG NMR, INC.
850 North canyons Parkway, Livermore, CA 94550

SQUARE 3

D MICE-F005

DO NOT SCALE

Proprietary

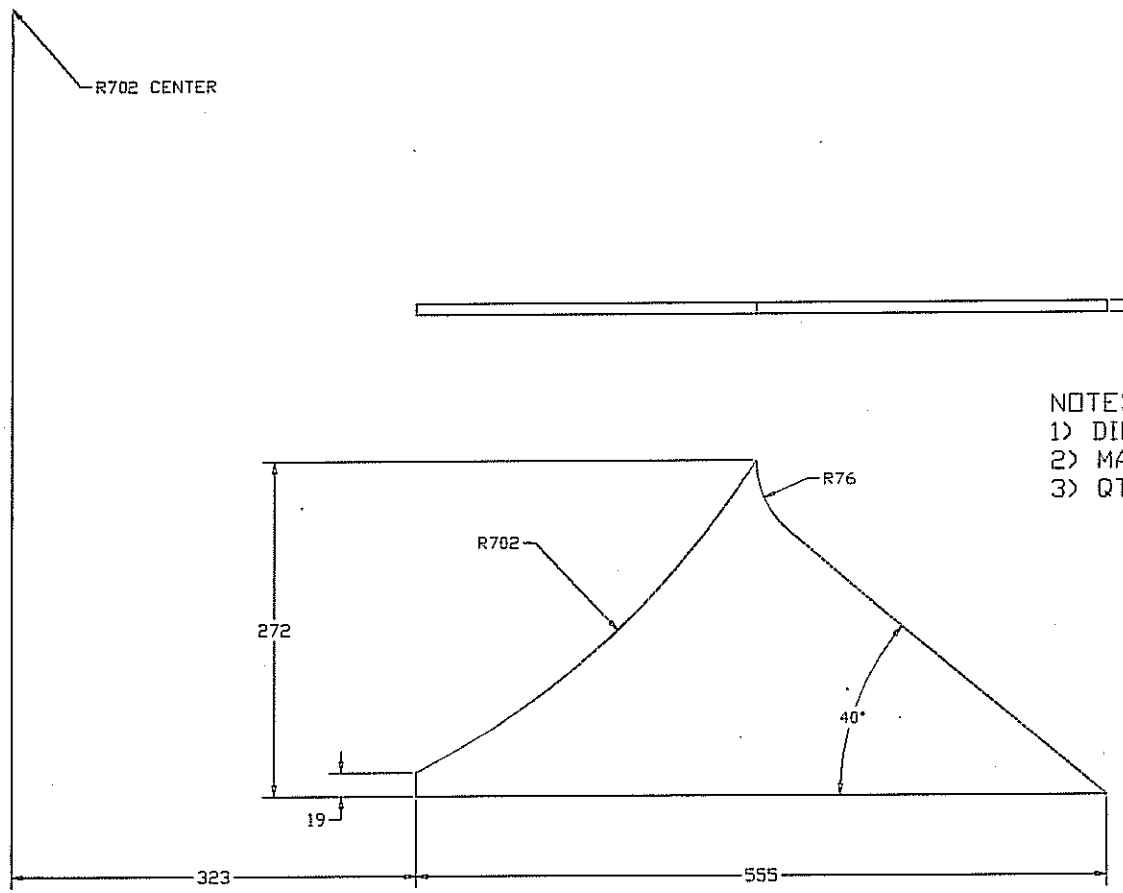

NOTES:
1) DIMENSIONS ARE IN mm
2) MATERIAL IS 3/8" THK. 304 S.S. PLATE
3) QTY. 12

WANG NMR, INC.
330 North canyons Parkway, Livermore, CA 94550

GUSSET PLATE

D MICE-F006

DO NOT SCALE

Appendix III-11-1

Engineering Design Drawing For Cold Mass Support

Wang NMR Inc.

• 550 North Canyons Parkway • Livermore, CA 94551

Proprietary

Proprietary

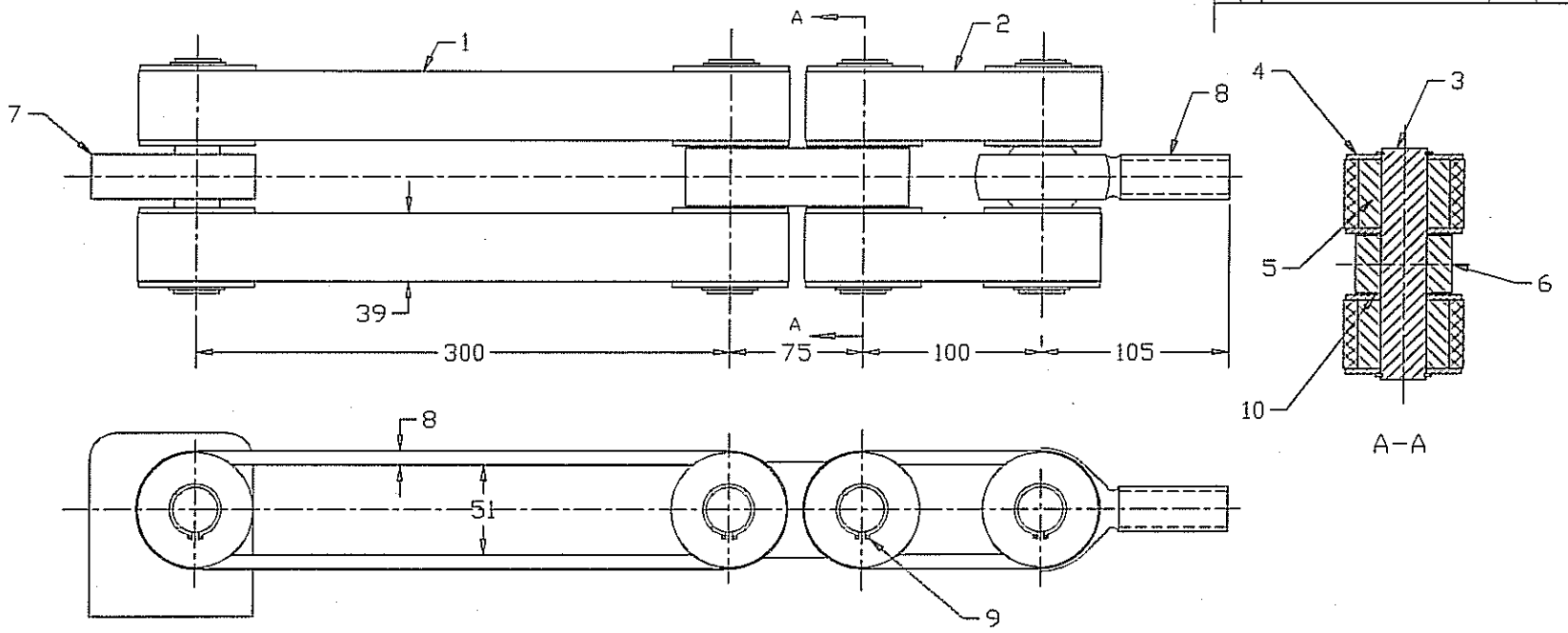

QTY.	ITEM	DWG. No.	DESCRIPTION	NOTE
6	10	MICE-L007	SPACER	304 S.S.
8	9		1' RETAIMAIN RING	
1	8		1' HIGH STRENTH ROD END	
1	7	MICE-C007	4.2K BRACKET	304 S.S.
1	6	MICE-L006	50K BRACKET	304 S.S.
8	5	MICE-L005	BUSHER	304 S.S.
16	4	MICE-L004	WASHER	304 S.S.
4	3	MICE-L003	PIN	INCONEL
2	2	MICE-L002	50K-300K FIBER GLASS STRIP	S2 GLASS
2	1	MICE-L001	4.2K-50K FIBER GLASS STRIP	S2 GLASS

NOTES:
1) DIMENSIONS ARE IN mm
2) QTY. 8 SET

UNLESS OTHERWISE SPECIFIED TOLERANCES:

WANG NMR, INC.
530 North Canyons Parkway, Livermore, CA 94550

MICE TRACKER MODULE
25T COLD MASS
SUPPORT

D MICE-L000

DO NOT SCALE

Proprietary

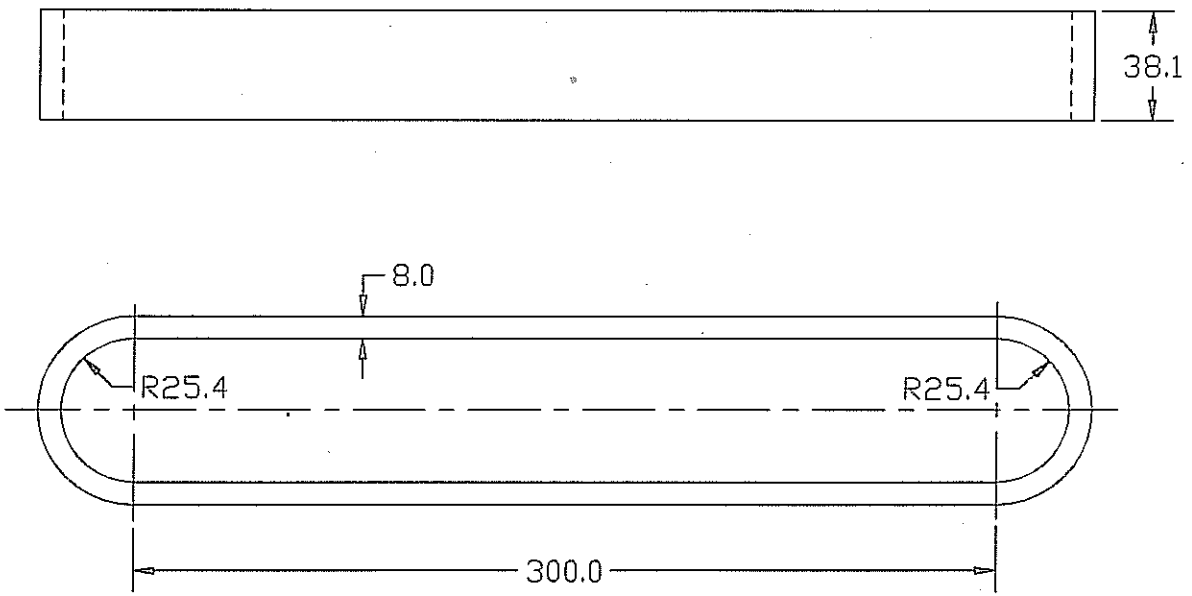

NOTES:
1) DIMENSIONS ARE IN mm
2) MATERIAL IS S-2 FIBER GLASS
   BONDED WITH EPOXY
3) TENSION TEST 12.5T
   BROKEN TENSION 50T
4) QTY. 2

WANG NMR, INC.
550 North Canyons Parkway, Livermore, CA 94550

4.2K-50K
FIBER GLASS STRIP

D | MICE-L001

DO NOT SCALE

Proprietary

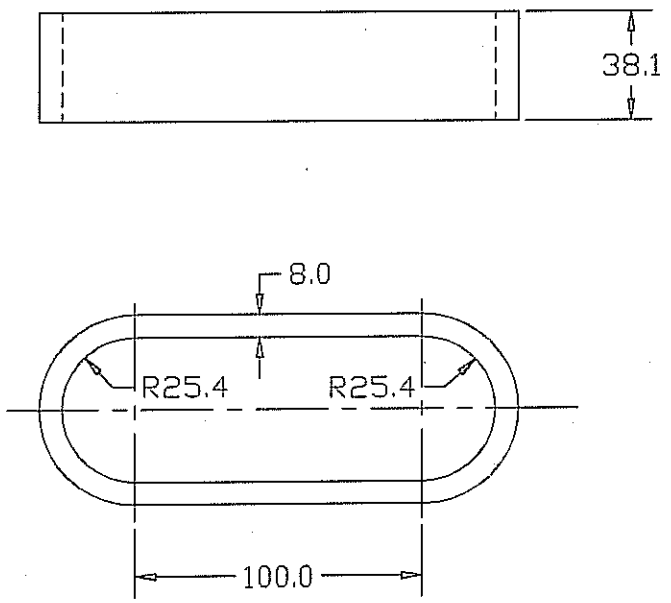

NOTES:
1) DIMENSIONS ARE IN mm
2) MATERIAL IS S-2 FIBER GLASS
   BONDED WITH EPOXY
3) TENSION TEST 12.5T
   BROKEN TENSION 50T
4) QTY. 2

WANG NMR, INC.
330 North campus Parkway, Livermore, CA 94550

50K-300K
FIBER GLASS STRIP

D
MICE-L002

Proprietary

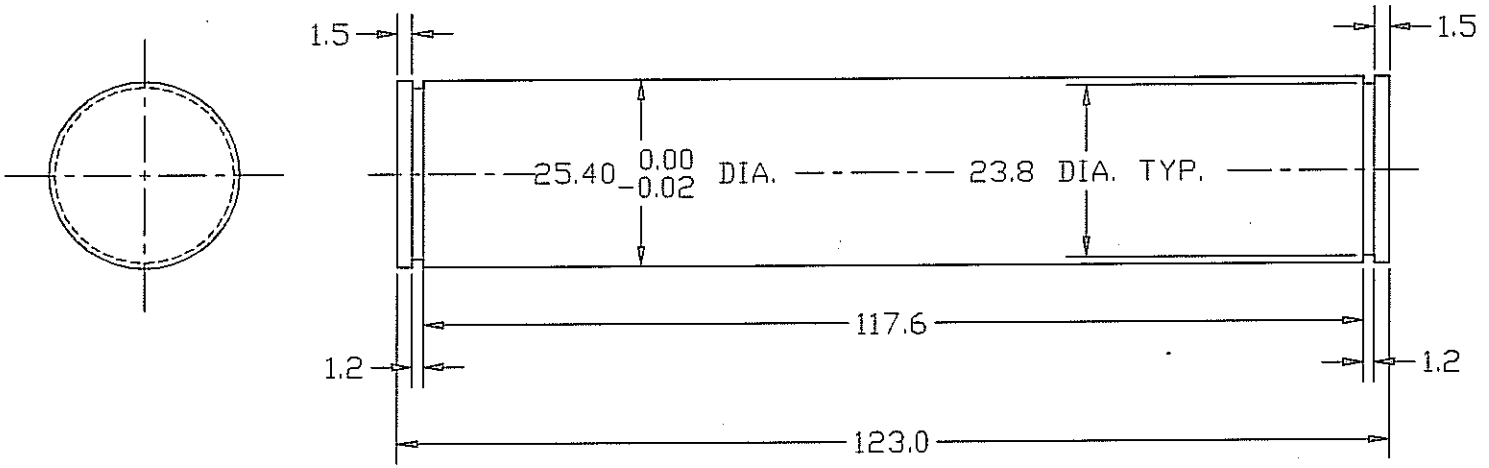

NOTES:
1) DIMENSIONS ARE IN mm
2) MATERIAL IS INCONEL 714
3) QTY. 4

WANG NMR, INC.
550 North Canyons Parkway, Livermore, CA 94550

PIN

D

MICE-L003

DO NOT SCALE

Proprietary

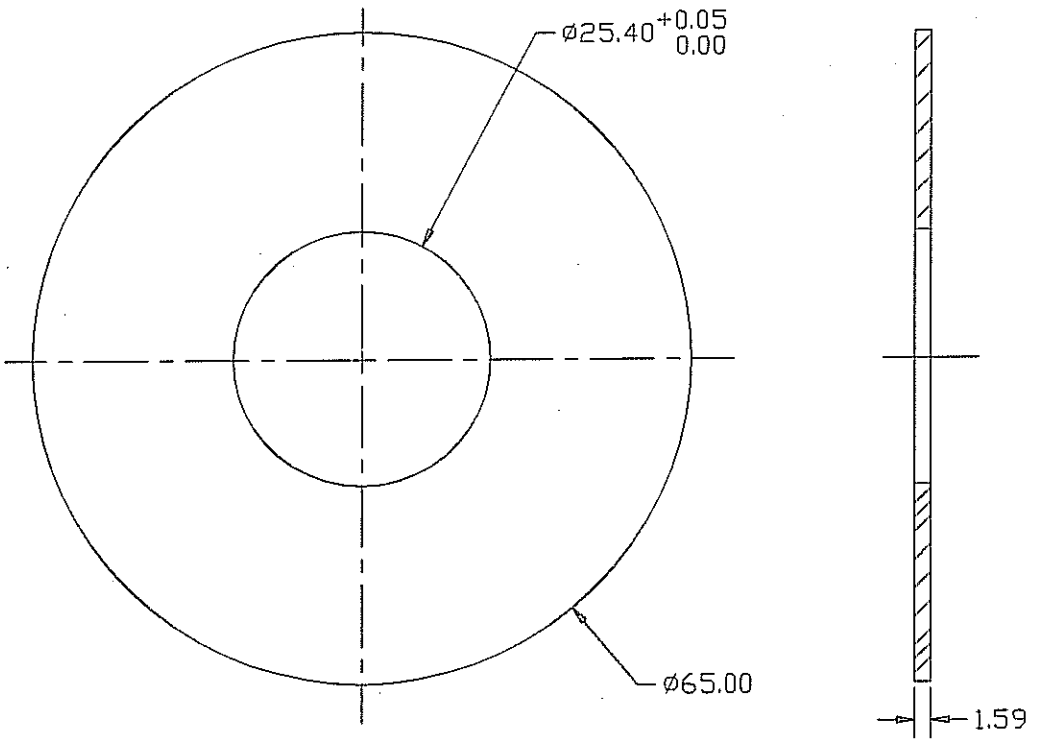

NOTES:
1) DIMENSIONS ARE mm
2) MATERIAL IS 1/16" THK. 304 S.S. SHEET
3) QTY. 16

REVISIONS				
ZONE	REV	DESCRIPTION	DATE	APPROVED

UNLESS OTHERWISE SPECIFIED TOLERANCES:
.XXX ± .005
.XX ± .02

TREATMENT
FINISH
ACT. WT. CALC. WT.

CONTRACT NO.
DRAWN DATE
CHECK
DESIGN
DESIGN ACTIVITY
CLOSTCHKP

WANG NMR, INC.
550 North canyons Parkway, Livermore, CA 94550

TITLE: WASHER

SIZE: C
DWG NO: MICE-L004
SCALE: DO NOT SCALE
RELEASE DATE
SHEET

Proprietary

REVISIONS				
ZONE	REV	DESCRIPTION	DATE	APPROVED

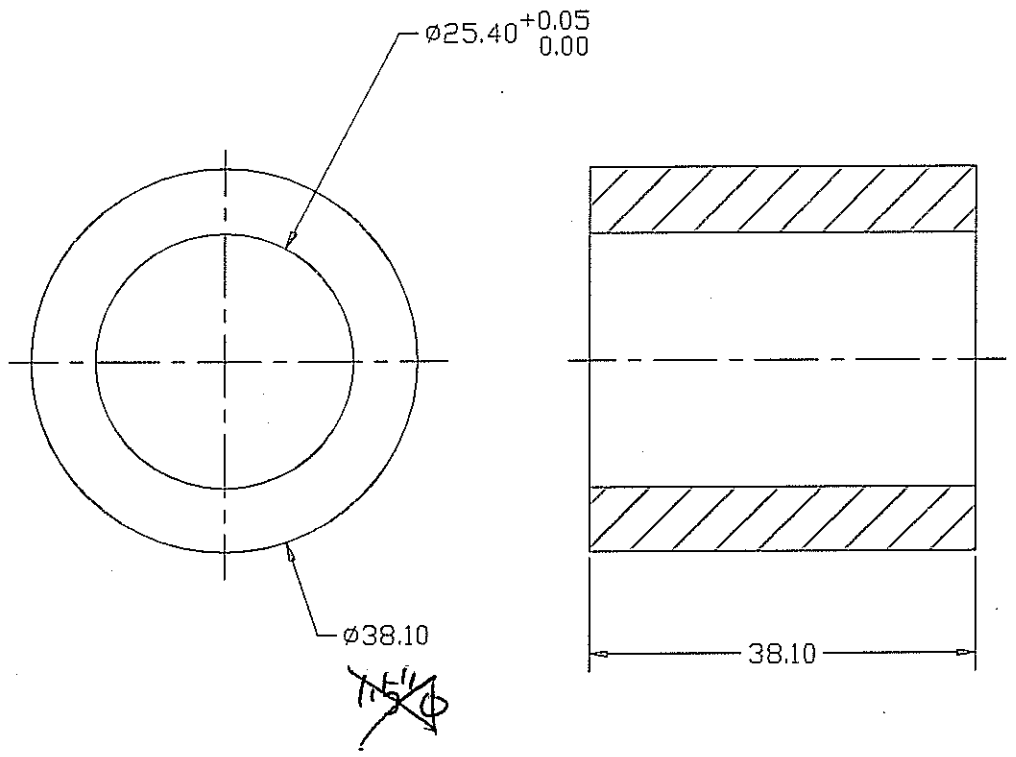

NOTES:
1) DIMENSIONS ARE mm
2) MATERIAL IS 304 OR 303 S.S.
3) QTY. 8

UNLESS OTHERWISE SPECIFIED TOLERANCES:
.XXX ± .005
.XX ± .02

TREATMENT
FINISH
ACT. WT. CALC. WT.

CONTRACT NO.
DRAWN DATE
CHECK
DESIGN
DESIGN ACTIVITY
CUSTOMER

WANG NMR, INC.
550 North canyons Parkway, Livermore, CA 94550

TITLE: BUSHER

SIZE: C
DWG NO: MICE-L005
SCALE: DO NOT SCALE
RELEASE DATE
SHEET

Proprietary

ZONE	REV	DESCRIPTION	DATE	APPROVED

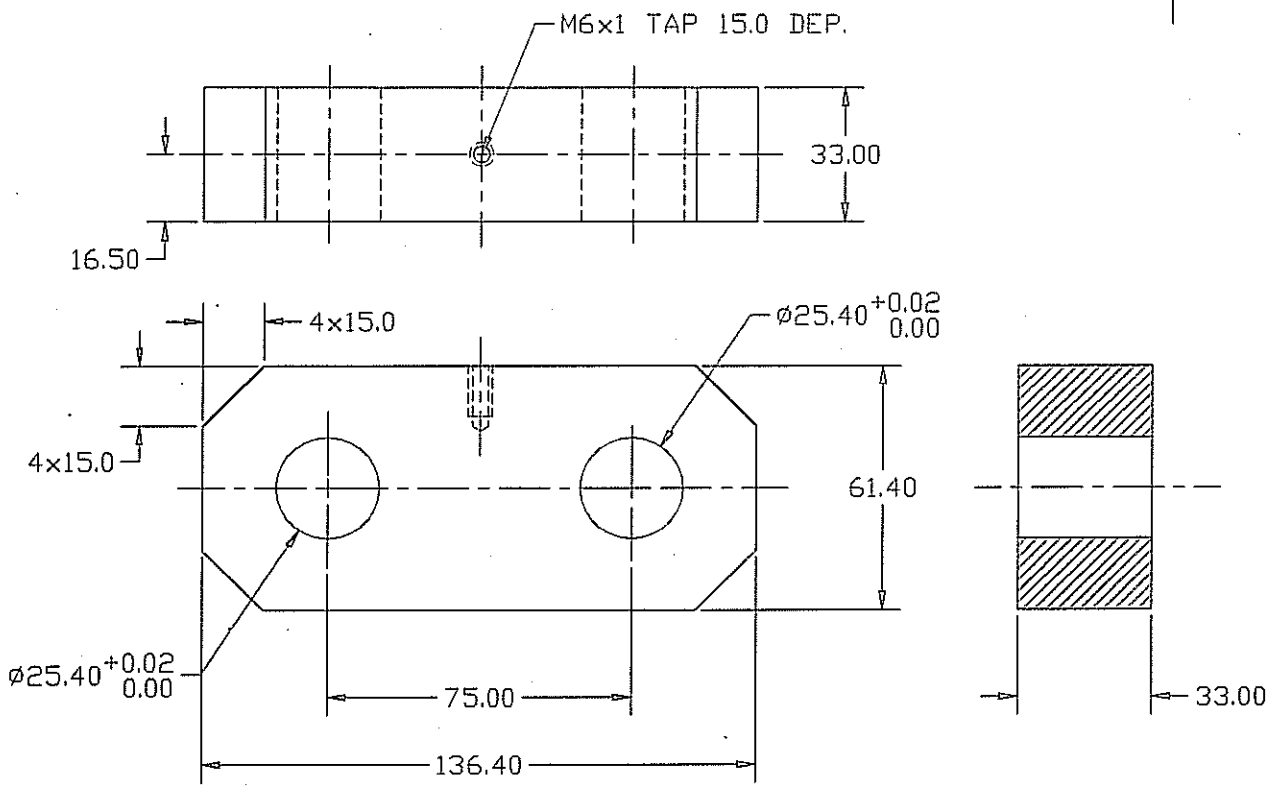

NOTES:
1) DIMENSIONS ARE IN mm
2) MATERIAL IS 1.5" THK. 304 S.S. PLATE
3) QTY. 1

UNLESS OTHERWISE SPECIFIED TOLERANCES:
.XXX ± .005
.XX ± .02

TREATMENT
FINISH
ACT. WT. CALC. WT.

CONTRACT NO.
DRAWN DATE
CHECK
FINISH
DESIGN ACTIVITY
CUSTOMER

WANG NMR, INC.
550 North canyons Parkway, Livermore, CA 94550

TITLE
50K BRACKET

SIZE C
DWG NO. MICE-L006
SCALE DO NOT SCALE
RELEASE DATE
SHEET

Proprietary

REVISIONS				
ZONE	REV	DESCRIPTION	DATE	APPROVED

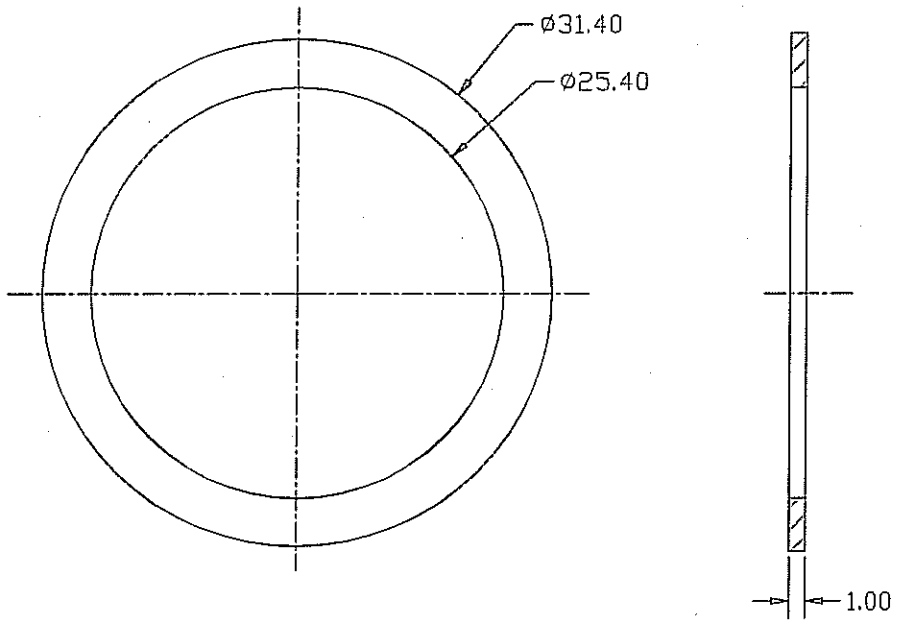

NOTES:
1) DIMENSIONS ARE IN mm
2) MATERIAL IS 1 mm THK. 304 S.S. SHEET
3) QTY.6

UNLESS OTHERWISE SPECIFIED TOLERANCES:
.XXX ± .005
.XX ± .02

TREATMENT
FINISH
ACT. WT. CALC. WT.

CONTRACT NO.
DRAWN DATE
CHECK
DESIGN
DESIGN ACTIVITY
CUSTOMER

WANG NMR, INC.
550 North canyons Parkway, Livermore, CA 94550

TITLE
SPACER

SIZE C
WNR NO. MICE-L007
SCALE DO NOT SCALE
RELEASE DATE
SHEET