MECHANICAL BEHAVIOR OF MICE SS Coil E2
April 16, 2016

A. Marone, P. Wanderer, H. Witte

Summary.
This note summarizes a portion of the talk given at the MICE review at RAL on April 5, 2016. The talk presented results of the independent analyses performed by H. Witte and A. Marone to understand the training behavior of the SS coil E2. The training behavior of the two E2 coils is very unusual: training begins at a relatively low fraction of the conductor limit, is lost after the magnet is thermally cycled, and is very similar following each thermal cycle. These results are "preliminary," in the sense that Witte and Marone plan to perform some final checking. However, the conclusions of both analyses are firm: that the quench training behavior of the E2 coil can be understood as a consequence of the basic mechanical properties of the SS magnet in response to electromagnetic forces and thermal cycles.

The two SS magnets have five solenoid coils mounted on a single aluminum bobbin (Fig. 1).

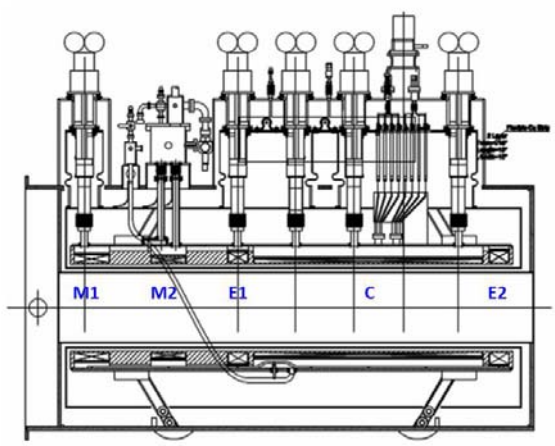

Fig. 1 – Schematic of a SS magnet. M1 and M2 match the beam to the detector. E1 and E2 extend the good field region of the ~ 1m-long solenoid coil which houses the beam tracking system.

Representative training data for the two solenoids SS1 and SS2, following cooldown from room temperature are in Fig. 2. The training curves are very similar: the first quenches occur at currents where there is a very large margin with respect to critical current, training to operating current requires almost the same the number of quenches, and the quench currents increase (almost) monotonically. Nearly all the quenches originate in the E2 coils. Given the large margin in the conductor at the time of the first quench, the root cause is most likely to be mechanical.

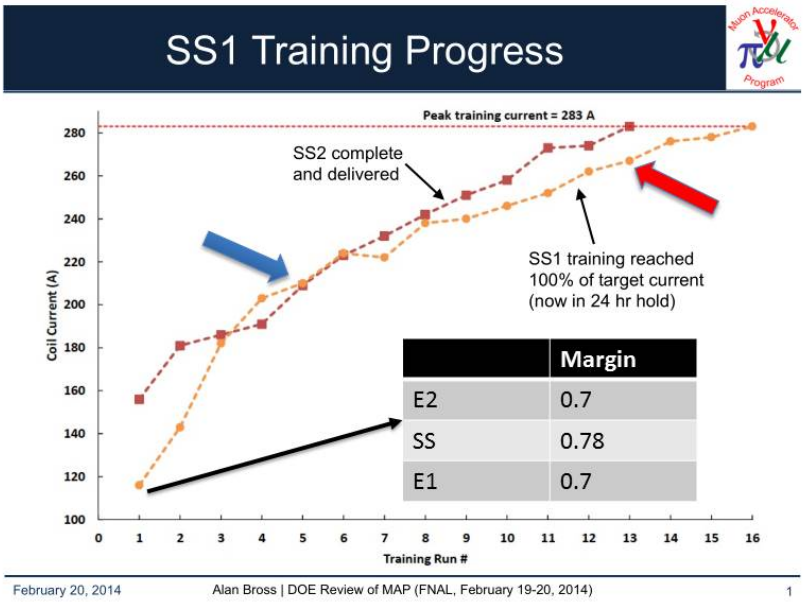

Fig. 2. Representative training data for the solenoids.

The model created for the FEA analysis is shown in Fig. 3. The properties of the orthotropic coil material are taken from measurements made at the National High Magnetic Field Lab in Florida [1]. The bobbin is 6061T6 aluminum. The FEA model contained contact elements between the bobbin with a coefficient of friction of 0.2. The model also included the winding tension, thermal contraction, and the electromagnetic forces due to excitation. The coil model exhibits both transient and quasi-static states

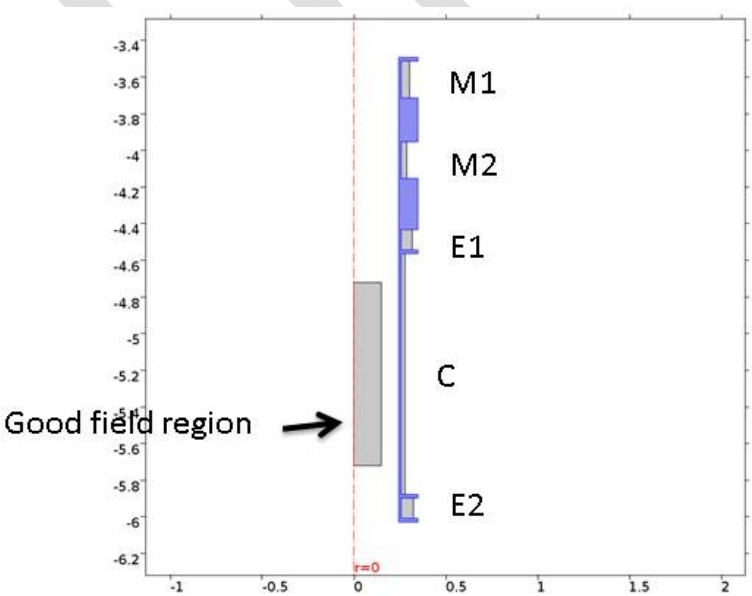

Fig. 3. Model of the solenoid used for analysis. (This initial version did not have the aluminum sleeve that formed the helium containment vessel. The sleeve was added later.) Dimensions are in meters.

Since the bobbin shrinks more than the coil, a radial gap opens up during cooldown (Fig. 4). The E2 coil restricts the axial contraction of the bobbin, producing a deflection of the bottom support and reducing the contact area of the coil there (large arrow in Fig 4).

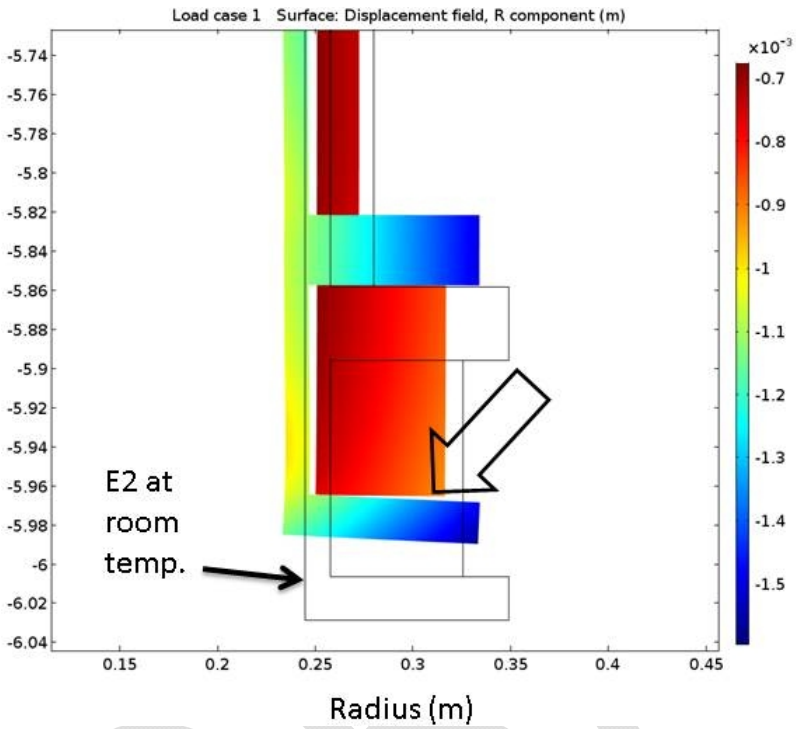

Fig. 4. Coil E2 after cooldown is shown in color. The position of the coil at room temperature is indicated by the outline. The vertical scale on the right shows the change in radius relative to the size at room temperature (m).

The E2 coil is subject to the usual self-generated forces of a solenoid -- compressive along the axis and radially outward. In addition, the flux lines of the C coil compress it axially toward the C coil with 200 T of force. This is shown schematically in Fig. 5.

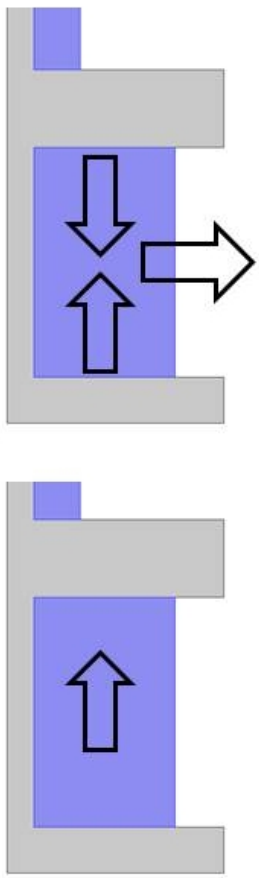

Fig. 5. Schematic representation of the directions of the electromagnetic forces acting on the E2 coil. The upper figure shows the forces generated by the solenoid itself: axial contraction, radial expansion. The lower figure shows the force due to the current in the E2 coil and the field generated by the C coil.

As coil E2 is cycled (Fig. 6), its radius increases and then decreases but to a value slightly larger than the initial radius (indicated by the straight line). The cumulative effect of this cycling is indicated in Fig. 7, where the radial displacements of the first and last cycles of Fig. 6 are plotted as a function of radius. The cumulative effect of cycling is clearly visible.

DRAFT

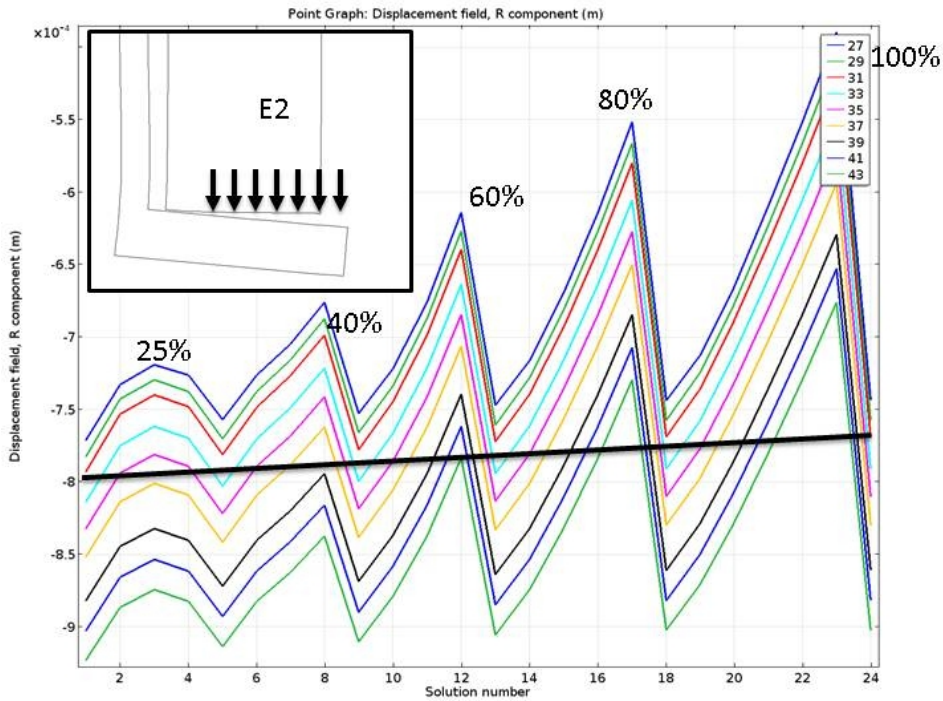

Fig. 6 .Radial position of the lower face of coil E2 as the magnet is "cycled" by powering to progressively higher levels. At each step("solution number"), the displacements of nine radial positions are shown. The straight line shows the gradual increase of the radius as a result of the cycling.

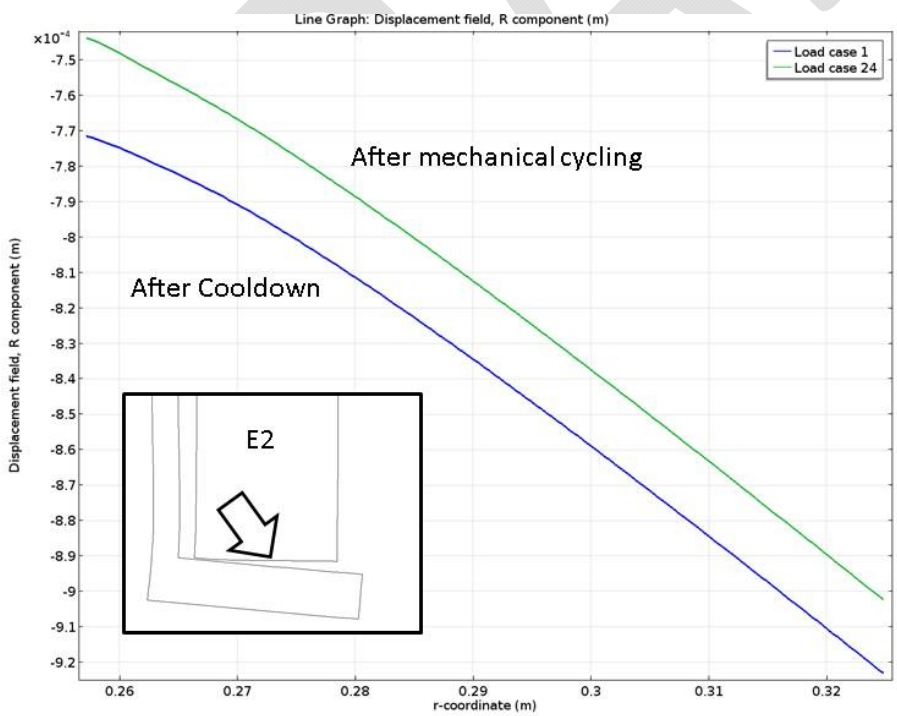

Fig. 7 Radial displacements for the first and last cycles shown in fig.6.

The model was also checked by comparing the positions of the E2 coil before and after a cycle of cooldown – train – warmup. It has been found that the E2 coils lose their training after a thermal cycle (Fig. 1). The comparison (Fig. 8) shows that the E2 coil position before and after such a cycle are essentially the same.

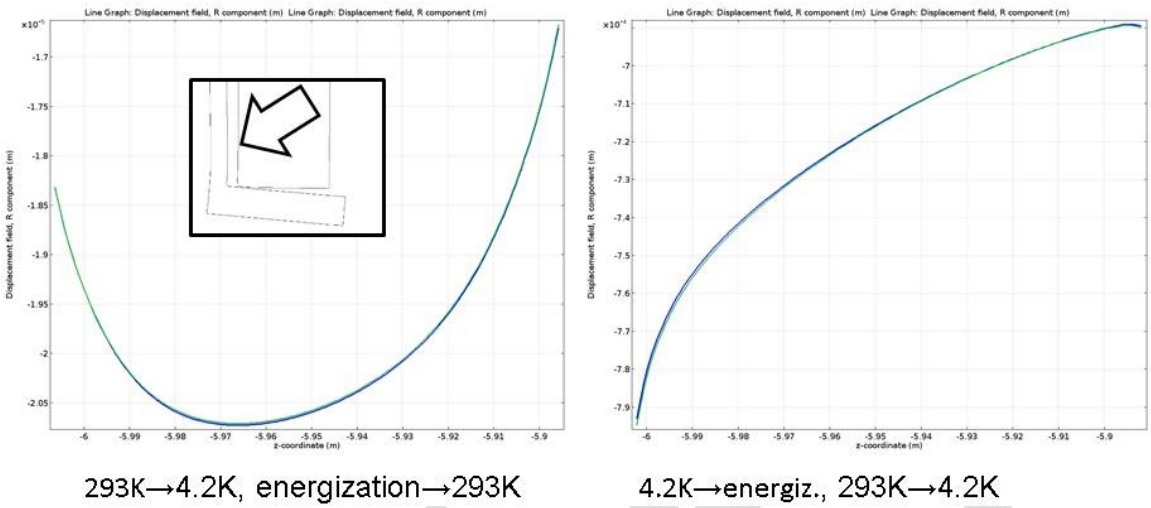

Fig. 8. Left side: Radial displacement of the E2 inner radius versus axial position before and after the coil is cooled, energized and trained, and then warmed to room temperature (left). The before and after positions are plotted in blue and green. The two curves are nearly indistinguishable, indicating that the positions are essentially the same. Right side: same variables but with a starting point of 4K instead of room temperature.

Another check of the model was made by running it with the parameters of coil E1, which experiences much lower axial forces than E2. Cycling E1 as was done for E2 (Fig.6) produces a result (Fig. 9) consistent with E1's quench performance (i.e., not a principal source of training quenches).

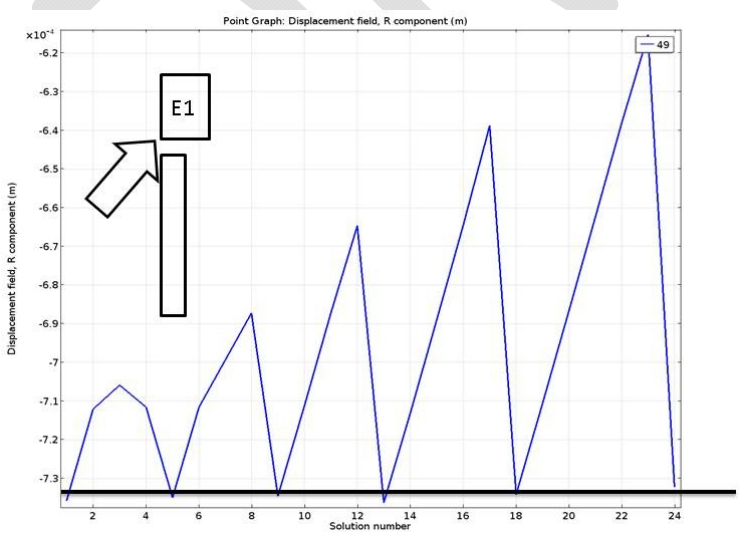

Fig. 9. Same model but applied to E1 coil. The E1 coil radius does not increase with cycling, consistent with the observation that the quenching behavior seen in E2 is not seen in E1.

The aluminum sleeve was welded to the two end flanges on the solenoid to form the helium containment vessel. When it was added to the model (Fig. 10), the model's results (Fig. 11, 12) showed the same overall characteristics as the model without the sleeve.

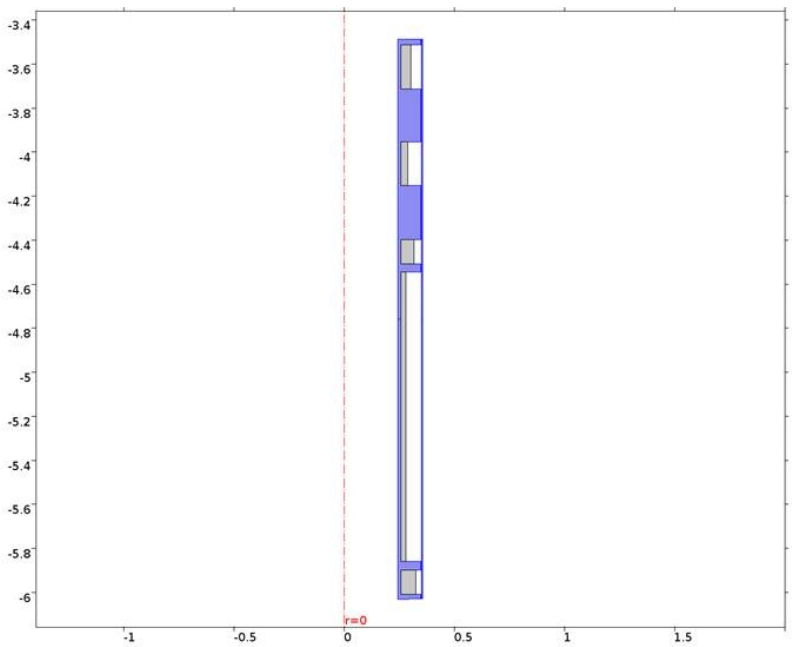

Fig.10. Model with 6 mm aluminum sleeve added.

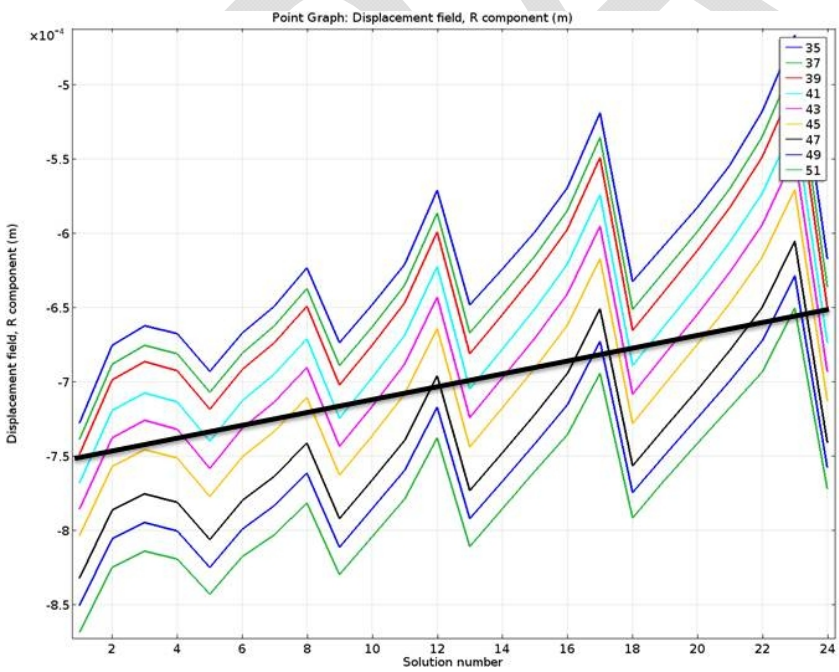

Fig. 11 – Displacement versus cycling for solenoid with sleeve. The slope of the straight line is about 2.5 times larger than with the no-sleeve model (Fig. 6).

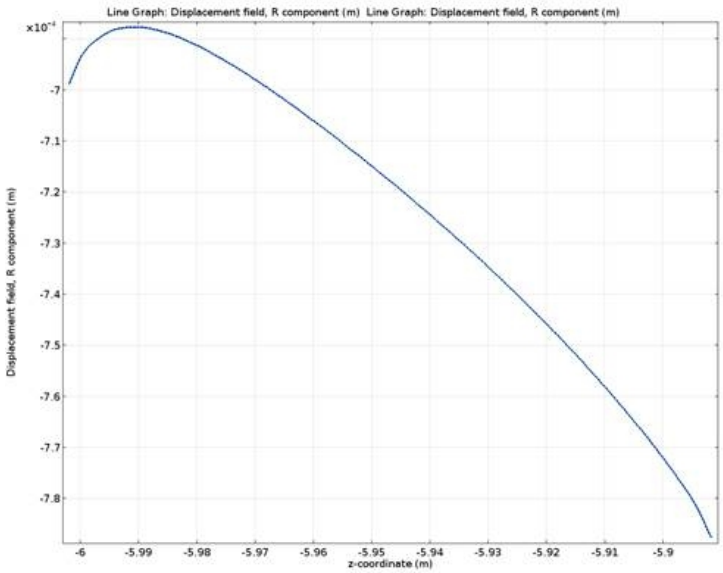

4.2K→energiz., 293K→4.2K

Fig. 12. Displacement as a function of radius before and after a cooldown – energize-warmup cycle for solenoid with sleeve. Compare to Fig. 8 (right).

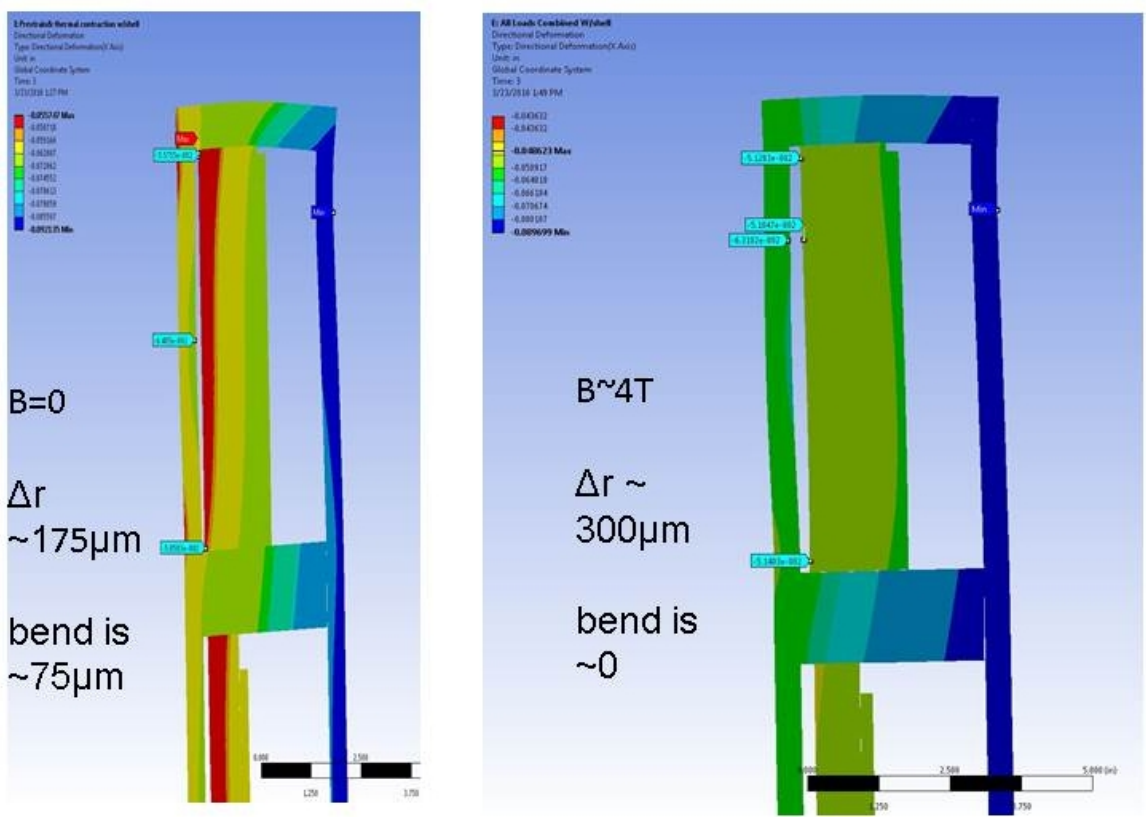

Fig. 13. Comparison with parallel analysis (previous slides). In both cases, the coil and sleeve are at 4 K.

As a consistency check, A. Marone performed an analysis in parallel with H.Witte. The results are qualitatively similar in spite of slightly different assumptions (see Table below). For example (Fig. 13 left), A. Marone's analysis shows significant deflections (75μm bending) of the coil and end flange following cooldown. Additional significant deflections occur when the coil is energized (Fig. 13 right).

	Friction	Sleeve	Coil design	Field	Thermal contraction	Other
Witte	Y	N and Y	Wang	~5.6T	Y	TBD
Marone	N	Y	Gupta #2	~ 4.0T	Y	TBD

Gupta #2 refers to a redesign of the E and C coils to reduce the peak field in the E coils while maintaining the same good-field region.

REFERENCE

[1] DOI 10.1109/20.511486

DRAFT