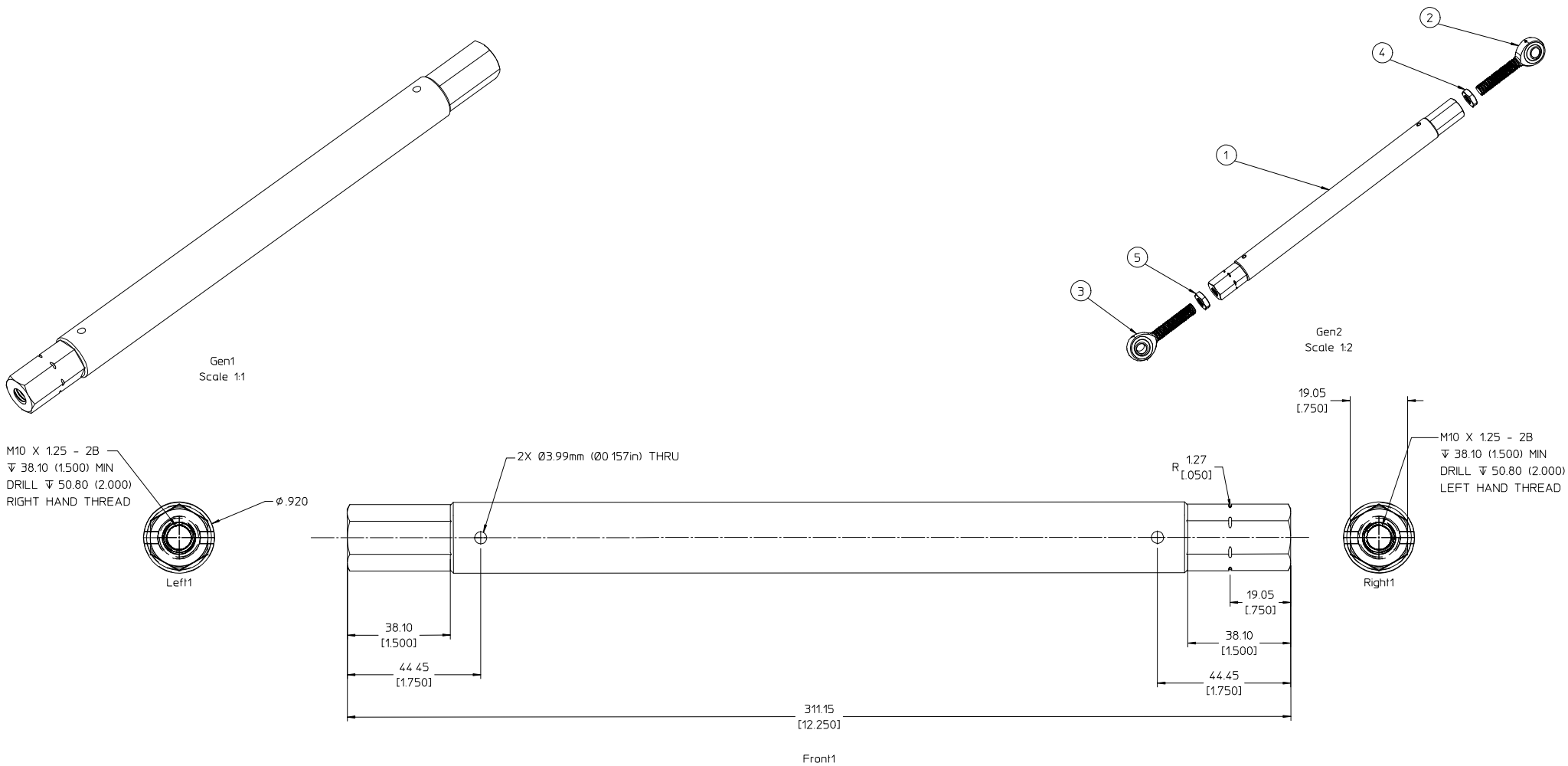

NOTES: (UNLESS OTHERWISE SPECIFIED)

1. ALL DIMENSIONS ARE IN MILLIMETERS. (DIMENSION IN PARENTHESIS ARE IN INCHES)
2. THIS IS A HIGH VACUUM COMPONENT. CLEAN PER LBNL SPECIFICATION M20013.
3. ALL HIDDEN LINES MAY NOT BE SHOWN.
4. TAKE EXTREME CARE NOT TO DING, SCRATCH, DENT OR OTHERWISE MARK ANY MACHINED SURFACE. PROTECT FINISHED PART BY BAGGING OR SIMILAR METHOD TO MAINTAIN CLEANLINESS DURING SHIPMENT AND STORAGE.

ITEM	REQ'D	PART NUMBER	DESCRIPTION
5	1	STIG'S STAINLESS FASTENERS OR EQUIV. www.a2stainless.co.uk	JAM NUT, STAINLESS STEEL, 10MM X 1.25 LEFT HAND THREAD
4	1	McMASTER #91938A115 OR EQUIV.	JAM NUT, STAINLESS STEEL, 10MM X 1.25 RIGHT HAND THREAD
3	1	SB-M10ED-1	ROD END, 10MM X 1.25 LEFT HAND THREAD, AURORA BEARING CO.
2	1	SM-M10ED-1	ROD END, 10MM X 1.25 RIGHT HAND THREAD, AURORA BEARING CO.
1	1	29H031	STRUT TUBE CENTER SECTION (ALUMINUM BRONZE, CAST, UNS C95400)

REV	AUTHOR	APPROVER	DATE	CHANGE DESCRIPTION
A	lkistule			INITIAL REVISION

UNLESS OTHERWISE SPECIFIED
TOLERANCES: .X± .5 .XX± .25 XXX± .125; FRACTIONS: ± -/--; ANGLES: ± 0.5°/MM; MACH. SURFS.: 1.6 OR BETTER
REF. ASME Y14.5M-1994, THREADS ARE CLASS 2
BREAK EDGES .016 MAX. ON MACHINED WORK
REMOVE BURRS, WELD SPLATTER & LOOSE SCALE

PROJECT NAME: MICE
UNIQUE NUMBER: MU-0007-5994
DO NOT SCALE PRINT
SCALE 1 . 5 : 1
CATEGORY CODE: MU1020
THIRD ANGLE PROJECTION

ERNEST ORLANDO LAWRENCE BERKELEY NATIONAL LABORATORY
UNIVERSITY OF CALIFORNIA
MUON IONIZATION COOLING EXPT. (MICE)
MICE - RF & COUPLING COIL MODULE
STRUT WITH AURORA ROD END ASSY

SHEET 1 OF 1 | SIZE D | DWG NO: 29H031 | REV A