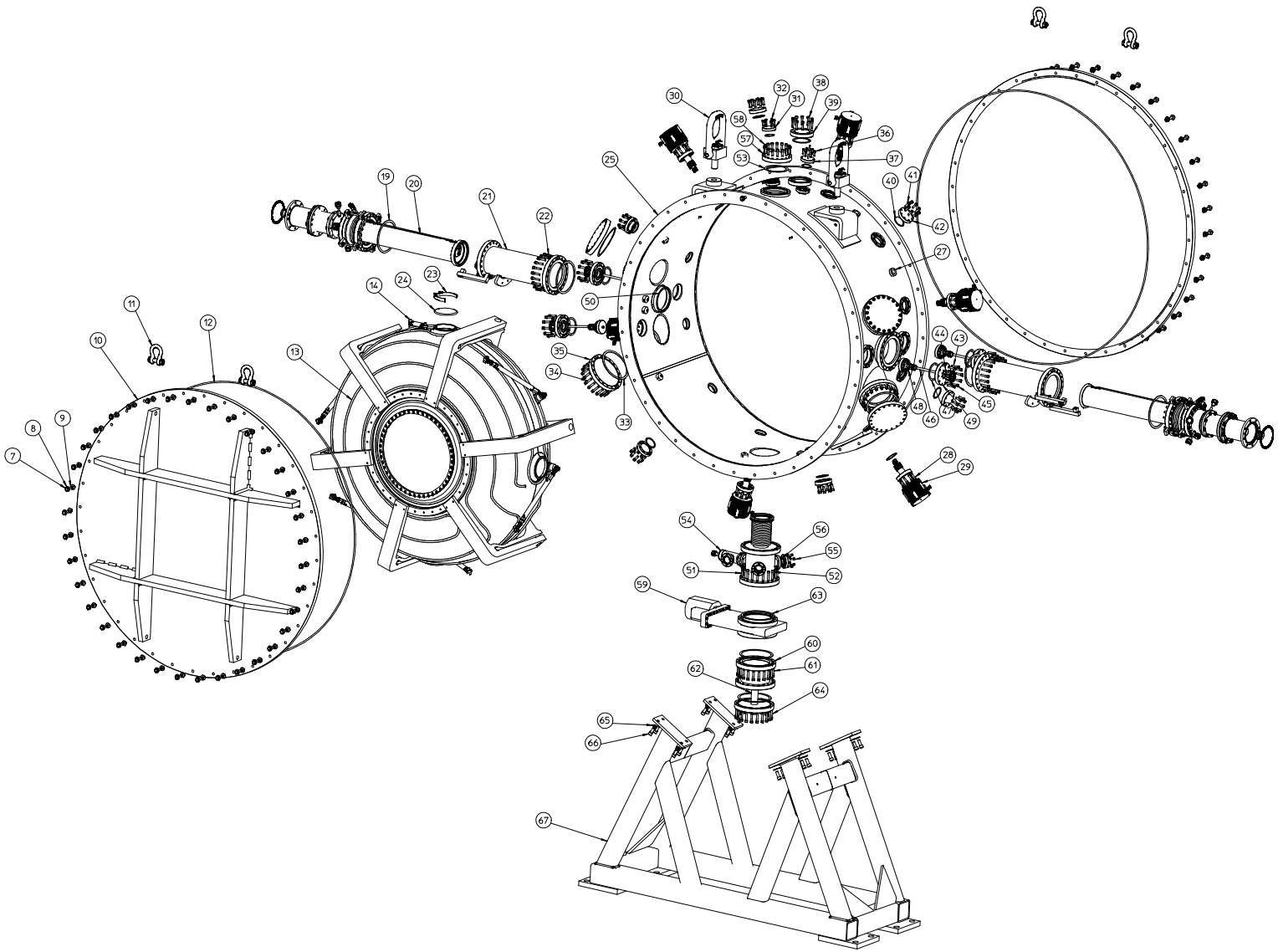

Scale 1:8

REQD	ITEM	PART NO	DESCRIPTION
1	67	-	VACUUM VESSEL SUPPORT STRUCTURE ASSEMBLY
16	66	-	M12 X 15 X 27 mm LG. STAINLESS STEEL HEX HEAD BOLT (SILVER PLATED)
16	65	-	M12 WASHER, STAINLESS STEEL, MCMASTER-CARR #90945A210 or EQUIV
20	64	-	M8 X 1.25 X 40 mm LG. STAINLESS STEEL SHCS (SILVER PLATED)
4	63	-	COPPER GASKET FOR Ø203 mm [8#] CFF
1	62	BT300	SAES CAPACITORR NEG (GETTER) VACUUM PUMP
20	61	-	M8 X 1.25 X 40 mm LG. STAINLESS STEEL SHCS (SILVER PLATED)
1	60	-	Ø203 mm [8"] CFF SPOOL
1	59	-	Ø524.4 mm [#4"] I.D. GATE VALVE
16	58	-	M8-1.25 X 25mm STAINLESS STEEL SHCS (SILVER PLATED)
1	57	-	6in CFF WITH M8 CLEARANCE HOLES
5	56	-	COPPER GASKET FOR Ø70 mm [#2.75"] CFF
14	55	-	M6 X 1 X 20 mm LG. STAINLESS STEEL SHCS (SILVER PLATED)
1	54	MDC-314003	ALL METAL MANUAL VALVE, MDC-314003 or EQUIV.
1	53	-	COPPER GASKET FOR 6in CFF
1	52	29H033	VACUUM MANIFOLD TUBE ASSEMBLY
40	51	-	M8-1.25 X 40mm STAINLESS STEEL SHCS (SILVER PLATED)
2	50	V09-3-64-54-001	V BAND CLAMP, CLAMPCO OR EQUIV
4	49	26L290	WATER FEEDTHRU EXTERNAL FLANGE
4	48	26L292	SPECIAL COPPER GASKET, 616mm OD, 511mm ID x 2mm THK
5	47	-	COPPER GASKET FOR Ø117 mm [#4.62"] CFF
4	46	SS-8-VCR-4-RALE	SWAGLOK VCR METAL GASKET FACE SEAL FITTING (NOTE: NON-METRIC THREADS)
40	45		M8 X 1.25 X 35 mm LG. STAINLESS STEEL SHCS (SILVER PLATED)
32	44	-	M6 WASHER, STAINLESS STEEL, MCMASTER-CARR #90945A070 or EQUIV.
32	43	-	M6 X 1 X 30 mm LG. STAINLESS STEEL SHCS (SILVER PLATED)
6	42	-	Ø85 mm [#3.37"] CONFLAT FLANGE WITH Ø8.8 mm HOLES, MDC 110075 or EQUIV.
48	41	-	M8 X 1.25 X 25 mm LG. STAINLESS STEEL SHCS (SILVER PLATED)
12	40	-	COPPER GASKET FOR Ø85 mm [#3.37"] CFF
1	39	MDC-450023	4.625 CFF QUARTZ (NON MAGNETIC) VIEWPORT, MDC 450023 or EQUIV
10	38	-	M8 X 1.25 X 35 mm LG. STAINLESS STEEL SHCS (SILVER PLATED)
1	37	MDC-450006	UP-TO-AIR VALVE, MDC 420006 or EQUIV.
6	36	-	M6 X 1 X 20 mm LG. STAINLESS STEEL SHCS (SILVER PLATED)
6	35	-	8in CFF FLANGE WITH M8 CLEARANCE HOLES
140	34	-	M8-1.25 X 40mm STAINLESS STEEL SHCS (SILVER PLATED)
7	33	-	COPPER GASKET FOR 8in CFF
6	32	-	M6 X 1 X 20 mm LG. STAINLESS STEEL SHCS (SILVER PLATED)
1	31	-	Ø70 mm [#2.75"] CONFLAT FLANGE WITH Ø6.0 mm HOLES, MDC 110008 or EQUIV.
2	30	P/N 23979	JERGENS HOIST RING 23979 7000-lb. CAPACITY M30 THREAD or EQUIV.
6	29	26L263	RF TUNER ACTUATOR ASSEMBLY
48	28	-	M8 X 1.25 X 25 mm LG. STAINLESS STEEL SHCS (SILVER PLATED)
10	27	15THDN	DRIFT NEST SURVEY POINT, BRUNSON OR EQUIV
-	26		
1	25	(SHEET 6)	VACUUM VESSEL ASSEMBLY (SEE ASSEMBLY CAVITY STRUT MOUNTS, WELDING)
1	24	26L221	RF CAVITY PORT CAP
2	23	V01-3-51-XX-4-0079-R	CLAMPCO STAINLESS STEEL V BANK CLAMP
40	22	-	M8 X 1.25 X 40 mm LG. STAINLESS STEEL SHCS (SILVER PLATED)
2	21	29H024	SPOOL, RF COUPLER, VACUUM VESSEL FEED THRU
2	20	26L231	CAVITY RF COUPLER ASSEMBLY
4	19	-	COPPER GASKET FOR Ø203mm [Ø8.0in] CFF
-	18	-	
-	17	-	
-	16	-	
-	15	-	
12	14	-	M10 X 15 X 25mm LG STAINLESS STEEL SHCS (SILVER PLATED)
1	13	26L291	RF CAVITY ASSEMBLY WITH TUNERS AND STRUTS
2	12	-	O-RING, Ø6.35 mm (#¼") CROSS SECTION, CUT LENGTH TO FIT (NOMINAL ID 1427.50 mm [56.2"])
4	11	P/N 36541	LIFTING RING, CARR-LANE 36541 or EQUIV.
2	10	29B914	914.4 mm DIAMETER FLANGED COVER PLATE ASSEMBLY
72	9	-	M10 NUT, STAINLESS STEEL
144	8	-	M10 WASHER, STAINLESS STEEL, MCMASTER-CARR #90945A200 or EQUIV.
72	7	-	M10 X 15 X 60 mm LG STAINLESS STEEL HEX HEAD BOLT
-	6	-	-
-	5	-	-
-	4	-	-
-	3	-	-
-	2	-	-
-	1		

NOTES:
1) THIS ASSEMBLY IS DESIGNED FOR USE WITH METRIC FASTENERS.

REV	AUTHOR	APPROVER	DATE	CHANGE DESCRIPTION
A	ikistule			INITIAL REVISION

UNLESS OTHERWISE SPECIFIED
TOLERANCES: X.X ± .- XX.X ± .-- XXX.X ± .---
FRACTIONS: ± -/--
ANGLES: ± - .*/INCH
MACH. SURFS.. 125√ IN MICRO
REF: ASME Y14.5M-1994, THREADS ARE CLASS 2
BREAK EDGES 0.16 MAX ON MACHINED WORK
REMOVE BURRS, WELD SPLATTER & LOOSE SCALE

PROJECT NAME: MICE
UNIQUE NUMBER: MU-0009-5826
DO NOT SCALE FROM DRAWING
SCALE: 1:10
CATEGORY CODE: MU1020
THIRD ANGLE PROJECTION

ERNEST ORLANDO LAWRENCE BERKELEY NATIONAL LABORATORY
UNIVERSITY OF CALIFORNIA

MUON IONIZATION COOLING EXPT (MICE)
MICE - RF & COUPLING COIL MODULE
SINGLE CAVITY VACUUM VESSEL, COMPLETE

SHEET 1 OF 6 | SIZE: E | DWG NO 29H030 | REV A

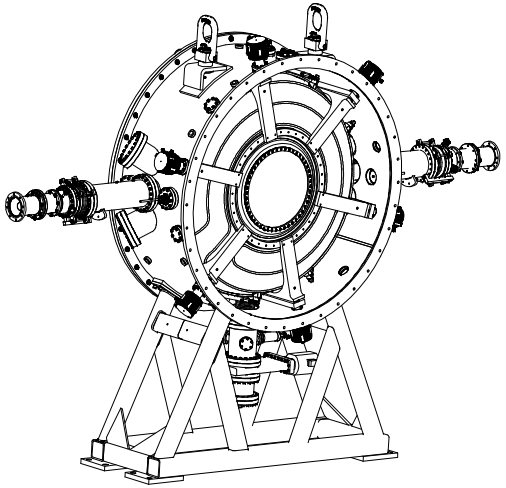

(VACUUM VESSEL COVER REMOVED)

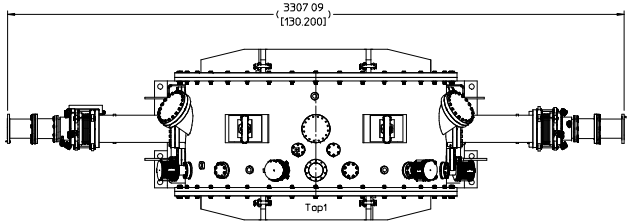

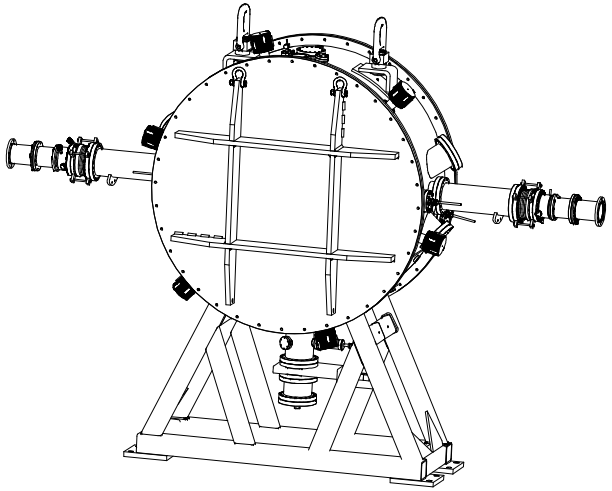

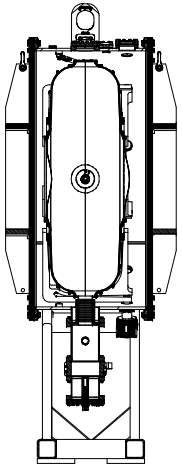

Section A-A

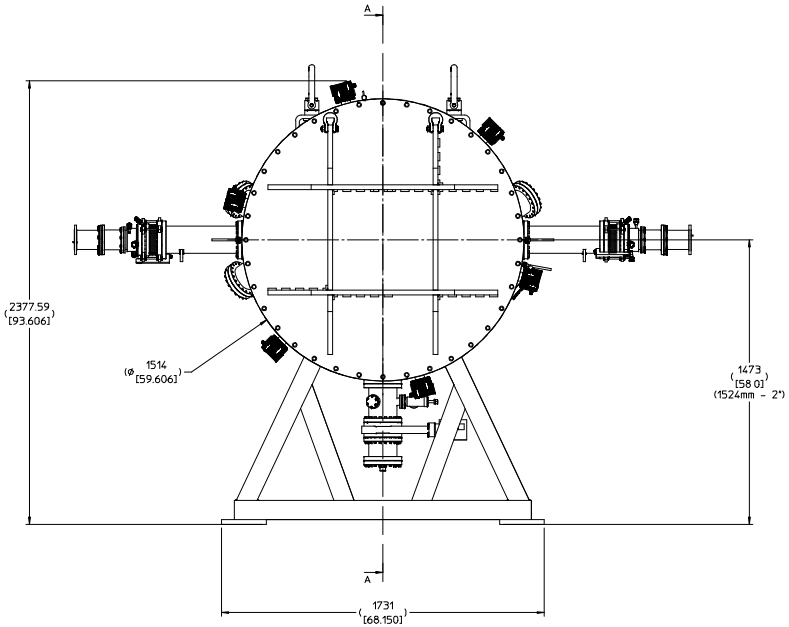

Front1

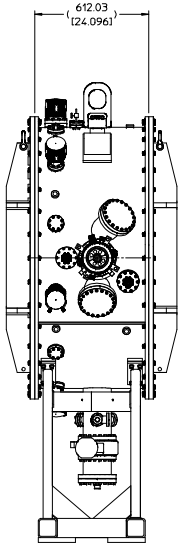

Right1

NOTES.
1.) THIS ASSEMBLY IS DESIGNED FOR USE WITH METRIC FASTENERS.

REV	AUTHOR	APPROVER	DATE	CHANGE DESCRIPTION
A	ikistule			INITIAL REVISION

UNLESS OTHERWISE SPECIFIED
TOLERANCES: X+.- XX+.76 XXX+.--- FRACTIONS: ± -/-- ANGLES: ± 1 0°/ 25mm MACH. SURFS.. 1.6√ in metres
REF: ASME Y14.5M-1994, THREADS ARE CLASS 2
BREAK EDGES 0.16 MAX ON MACHINED WORK
REMOVE BURRS, WELD SPLATTER & LOOSE SCALE

PROJECT NAME: MICE
UNIQUE NUMBER: MU-0009-5826
DO NOT SCALE FROM DRAWING
CATEGORY CODE
SCALE: 1 : 10 MU1020
THIRD ANGLE PROJECTION

ERNEST ORLANDO LAWRENCE BERKELEY NATIONAL LABORATORY
UNIVERSITY OF CALIFORNIA

MUON IONIZATION COOLING EXPT (MICE)
MICE - RF & COUPLING COIL MODULE
SINGLE CAVITY VACUUM VESSEL, OVERALL DIMENSIONS

SHEET 2 OF 6 SIZE: E DWG NO 29H030 REV A

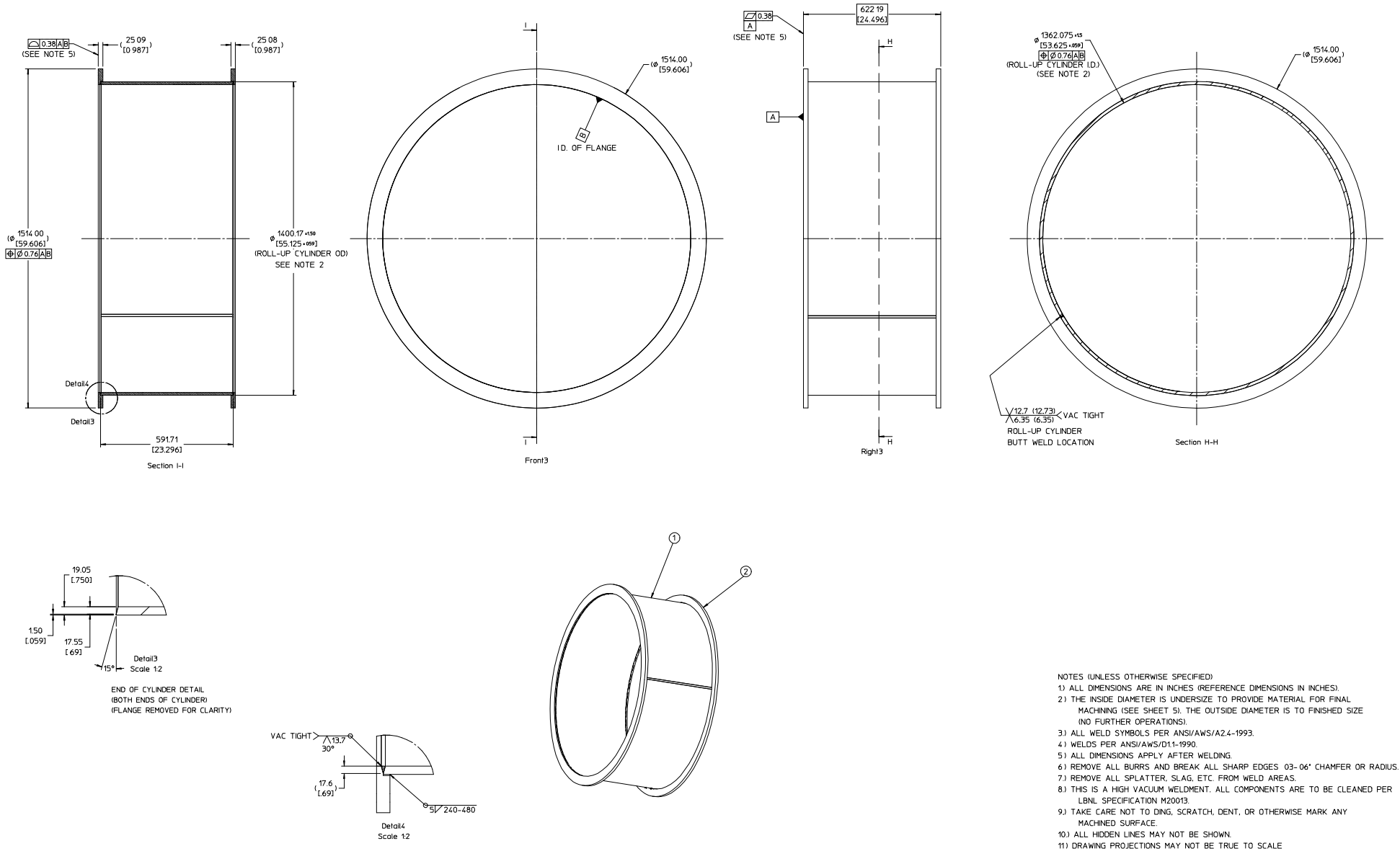

NOTES (UNLESS OTHERWISE SPECIFIED)

1.) ALL DIMENSIONS ARE IN INCHES (REFERENCE DIMENSIONS IN INCHES).
2.) THE INSIDE DIAMETER IS UNDERSIZE TO PROVIDE MATERIAL FOR FINAL MACHINING (SEE SHEET 5). THE OUTSIDE DIAMETER IS TO FINISHED SIZE (NO FURTHER OPERATIONS).
3.) ALL WELD SYMBOLS PER ANSI/AWS/A2.4-1993.
4.) WELDS PER ANSI/AWS/D1.1-1990.
5.) ALL DIMENSIONS APPLY AFTER WELDING.
6.) REMOVE ALL BURRS AND BREAK ALL SHARP EDGES 03-06" CHAMFER OR RADIUS.
7.) REMOVE ALL SPLATTER, SLAG, ETC. FROM WELD AREAS.
8.) THIS IS A HIGH VACUUM WELDMENT. ALL COMPONENTS ARE TO BE CLEANED PER LBNL SPECIFICATION M20013.
9.) TAKE CARE NOT TO DING, SCRATCH, DENT, OR OTHERWISE MARK ANY MACHINED SURFACE.
10.) ALL HIDDEN LINES MAY NOT BE SHOWN.
11.) DRAWING PROJECTIONS MAY NOT BE TRUE TO SCALE
12.) APPROXIMATE WEIGHT: 1000 lbs.

REQD	ITEM	DWG#	DESCRIPTION
1	1		VACUUM VESSEL ROLL UP CYLINDER SS 304L
2	1	29B918	1514MM DIAMETER FLANGE, NO HOLES

REV	AUTHOR	APPROVER	DATE	CHANGE DESCRIPTION
A	ikistule			INITIAL REVISION

UNLESS OTHERWISE SPECIFIED
TOLERANCES: .X± .- .XX± .76 .XXX± .---
FRACTIONS: ± -/--
ANGLES: ± 1 0/25mm
MACH. SURFS.. 1.6√ IN METER
REF: ASME Y14.5M-1994, THREADS ARE CLASS 2
BREAK EDGES 0.16 MAX ON MACHINED WORK
REMOVE BURRS, WELD SPLATTER & LOOSE SCALE

PROJECT NAME: MICE
UNIQUE NUMBER: MU-0009-5826
DO NOT SCALE PRINT
SCALE: 1:6
CATEGORY CODE MU1020
THIRD ANGLE PROJECTION

ERNEST ORLANDO LAWRENCE BERKELEY NATIONAL LABORATORY
UNIVERSITY OF CALIFORNIA
MUON IONIZATION COOLING EXPT (MICE)
MICE - RF & COUPLING COIL MODULE
VACUUM VESSEL CYLINDER WELDMENT

SHEET 3 OF 6 | SIZE: E | DWG NO 29H030 | REV A

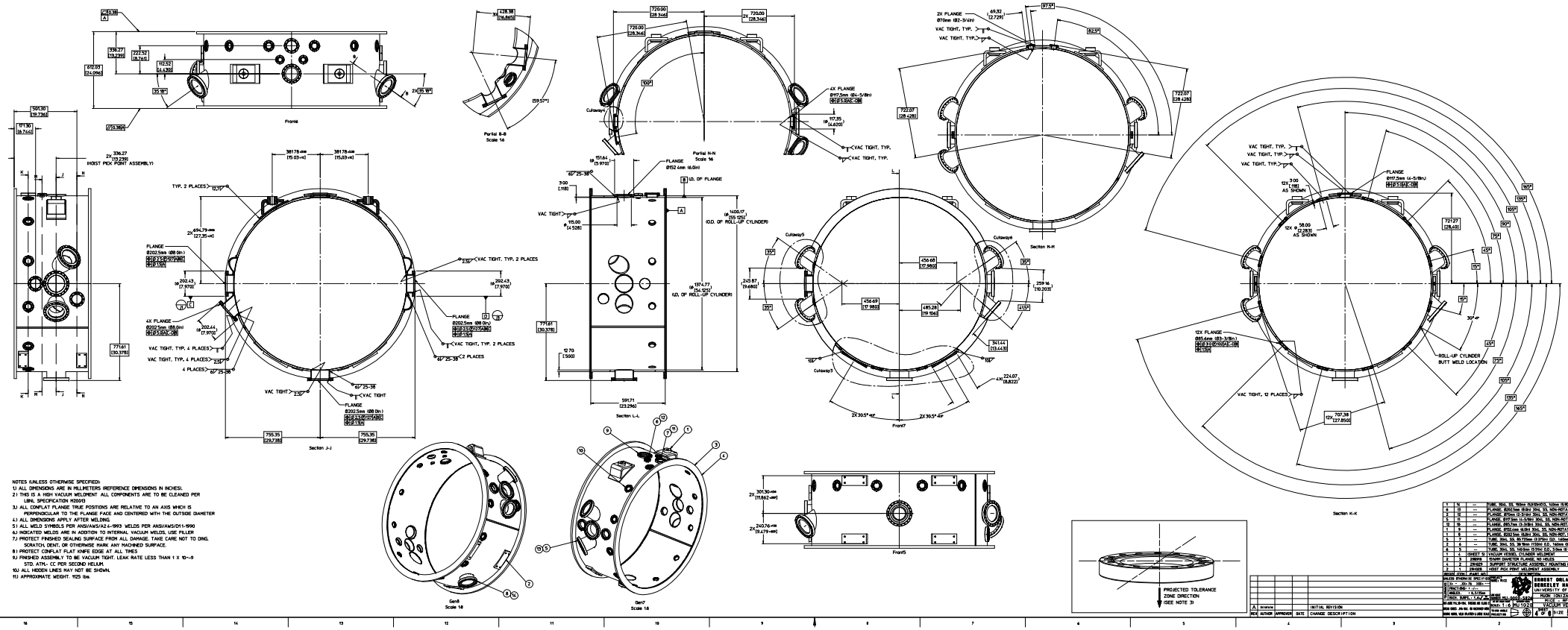

NOTES (UNLESS OTHERWISE SPECIFIED)
1.) ALL DIMENSIONS ARE IN MILLIMETERS (REFERENCE DIMENSIONS IN INCHES).
2.) THIS IS A HIGH VACUUM WELDMENT. ALL COMPONENTS ARE TO BE CLEANED PER LBNL SPECIFICATION M2001.
3.) ALL CONFLAT FLANGE TRUE POSITIONS ARE RELATIVE TO AN AXIS WHICH IS PERPENDICULAR TO THE FLANGE FACE AND CENTERED WITH THE OUTSIDE DIAMETER
4.) ALL DIMENSIONS APPLY AFTER WELDING.
5.) ALL WELD SYMBOLS PER ANSI/AWS/AZ4-1993. WELDS PER ANSI/AWS/D11-1990.
6.) INDICATED WELDS ARE IN ADDITION TO INTERNAL VACUUM WELDS. USE FILLER.
7.) PROTECT FINISHED SEALING SURFACE FROM ALL DAMAGE. TAKE CARE NOT TO DING, SCRATCH, DENT, OR OTHERWISE MARK ANY MACHINED SURFACE.
8.) PROTECT CONFLAT FLAT KNIFE EDGE AT ALL TIMES
9.) FINISHED ASSEMBLY TO BE VACUUM TIGHT. LEAK RATE LESS THAN 1 X 10^-9 STD. ATM- CC PER SECOND HELIUM.
10.) ALL HIDDEN LINES MAY NOT BE SHOWN.
11.) APPROXIMATE WEIGHT: 1125 lbs.

ITEM	NO.	PART NO.	DESCRIPTION
1	16	--	TUBE, 3A21, S5, 168mm (6.614in)O.D., 12mm (0.906in) ID
4	12	--	FLANGE, 8202.5mm (88.0in) 3A21, S5, NON-ROTATABLE, NO TAPPED HOLES
3	12	--	FLANGE, 8170mm (5.5in) 3A21, S5, NON-ROTATABLE, W/ TAPPED HOLES
5	12	--	FLANGE, 8117.5mm (4-5/8in) 3A21, S5, NON-ROTATABLE, NO TAPPED HOLES
6	12	--	FLANGE, 8152.4mm (6.0in) 3A21, S5, NON-ROTATABLE, W/ TAPPED HOLES
1	8	--	FLANGE, 8152.4mm (6.0in) 3A21, S5, NON-ROTATABLE, NO TAPPED HOLES
1	7	--	TUBE, 3A21, S5, 88.9mm (3.5in) O.D., 140mm (5.512in) WALL
1	6	--	TUBE, 3A21, S5, 38.1mm (1.5in) O.D., 140mm (5.512in) WALL
1	5	--	TUBE, 3A21, S5, 152.4mm (6.0in) O.D., 5.8mm (0.227in) WALL
1	4	(SHEET 5)	VACUUM VESSEL, CYLINDER WELDMENT
3	3	28H04	RAMP, SHAFTER FLANGE, NO HOLES
1	2	28H03	SUPPORT, STRUCTURE ASSEMBLY, MOUNTING PLATE
2	1	28H02	HOIST PICK POINT WELDMENT ASSEMBLY

REV	AUTHOR	APPROVER	DATE	CHANGE DESCRIPTION
A				INITIAL REVISION

UNLESS OTHERWISE SPECIFIED DIMENSIONS ARE IN MM
X.X ± .03 X.XX ± .005
FRACTIONAL ± 1/16
ANGLES ± 0.5 DEG
SURF. ROUGH. 125 µ
SURFACE TOL. 0.1 DEG. DRAWN BY: JAN 10, 1995
DRAWN BY: JAN 10, 1995 DRAWN BY: JAN 10, 1995
DRAWN BY: JAN 10, 1995 DRAWN BY: JAN 10, 1995

ERNEST ORLANDO LAWRENCE BERKELEY NATIONAL LABORATORY
UNIVERSITY OF CALIFORNIA
MUON IONIZATION COOLING EXPT. (MICE)
MICE - RF & COUPLING COIL MODULE
VACUUM VESSEL WELDMENT, FLANGES
SCALE: 1:6 MU1020
SIZE: 4'0" 6
DWG: 28H030
REV: A

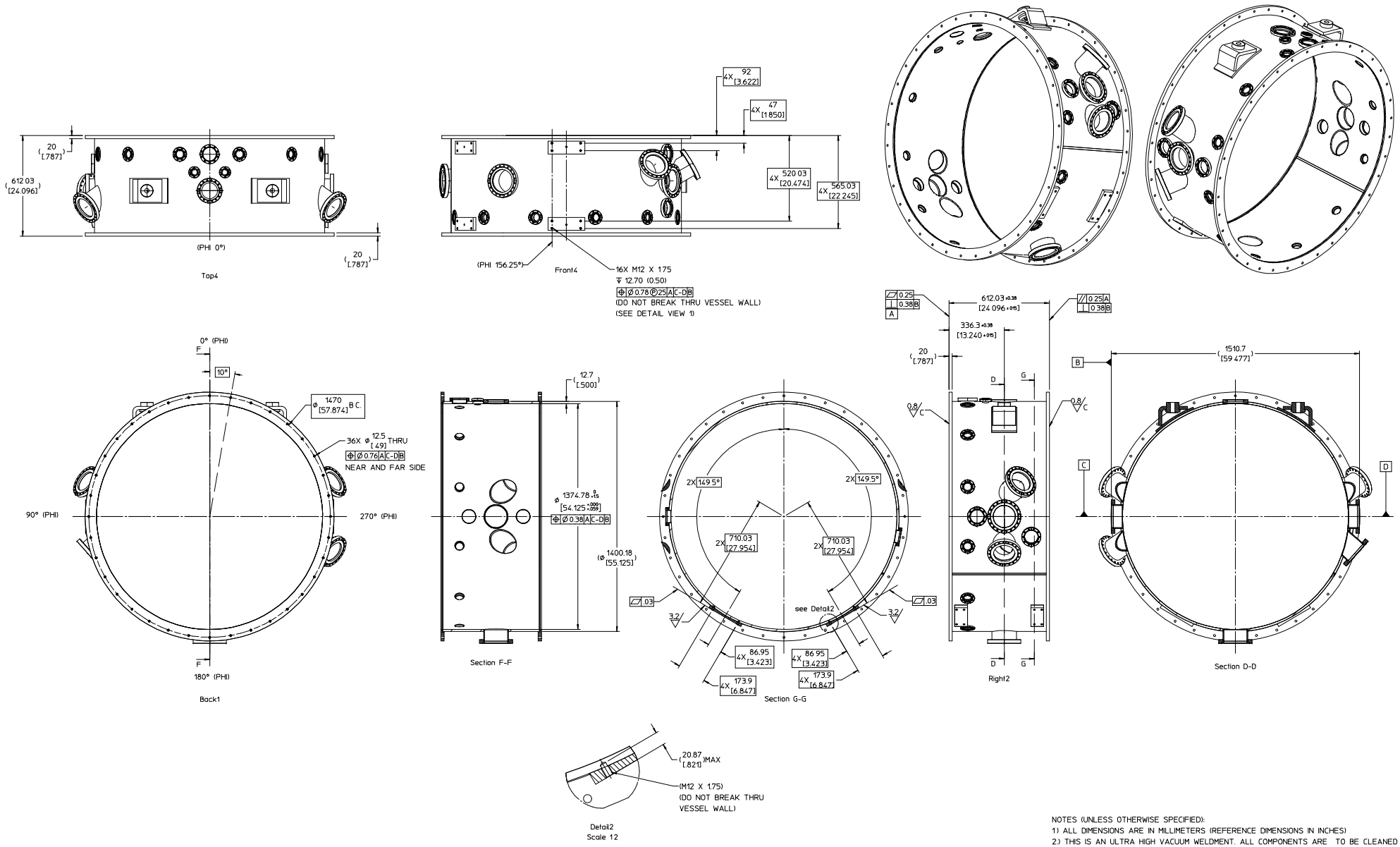

NOTES (UNLESS OTHERWISE SPECIFIED):

1) ALL DIMENSIONS ARE IN MILLIMETERS (REFERENCE DIMENSIONS IN INCHES)
2.) THIS IS AN ULTRA HIGH VACUUM WELDMENT. ALL COMPONENTS ARE TO BE CLEANED PER LBNL SPECIFICATION M20013.
3.) PROTECT FINISHED SEALING SURFACE FROM ALL DAMAGE. TAKE CARE NOT TO DING, SCRATCH, DENT, OR OTHERWISE MARK ANY MACHINED SURFACE.
4.) PROTECT CONFLAT FLANGE KNIFE EDGE AT ALL TIMES.
5.) FINISHED ASSEMBLY TO BE VACUUM TIGHT. LEAK RATE LESS THAN 1 X 10^-9 STD. ATM.- CC PER SECOND HELIUM.
6.) ALL HIDDEN LINES MAY NOT BE SHOWN.
7.) APPROXIMATE WEIGHT: 875 LBS

REQD.	ITEM	PART NO.	DESCRIPTION
1	1	29H030 (SHEET 4)	VACUUM VESSEL WELDMENT, FLANGES

REV	AUTHOR	APPROVER	DATE	CHANGE DESCRIPTION
A	ikistule			INITIAL REVISION

UNLESS OTHERWISE SPECIFIED
TOLERANCES: .X+.- .XX+.76 XXX+.---
FRACTIONS: ± -/--
ANGLES: ± 5/25mm
MACH. SURFS.. 1.6 in METER
REF: ASME Y14.5M-1994, THREADS ARE CLASS 2
BREAK EDGES 0.16 MAX ON MACHINED WORK
REMOVE BURRS, WELD SPLATTER & LOOSE SCALE

PROJECT NAME: MICE
UNIQUE NUMBER: MU-0009-5826
DO NOT SCALE PRINT
SCALE: 1 : 8
CATEGORY CODE MU1020
THIRD ANGLE PROJECTION

ERNEST ORLANDO LAWRENCE BERKELEY NATIONAL LABORATORY
UNIVERSITY OF CALIFORNIA
MUON IONIZATION COOLING EXPT (MICE)
MICE - RF & COUPLING COIL MODULE
VACUUM VESSEL FINAL MACHINING

SHEET 5 OF 6 | SIZE: E | DWG NO 29H030 | REV A

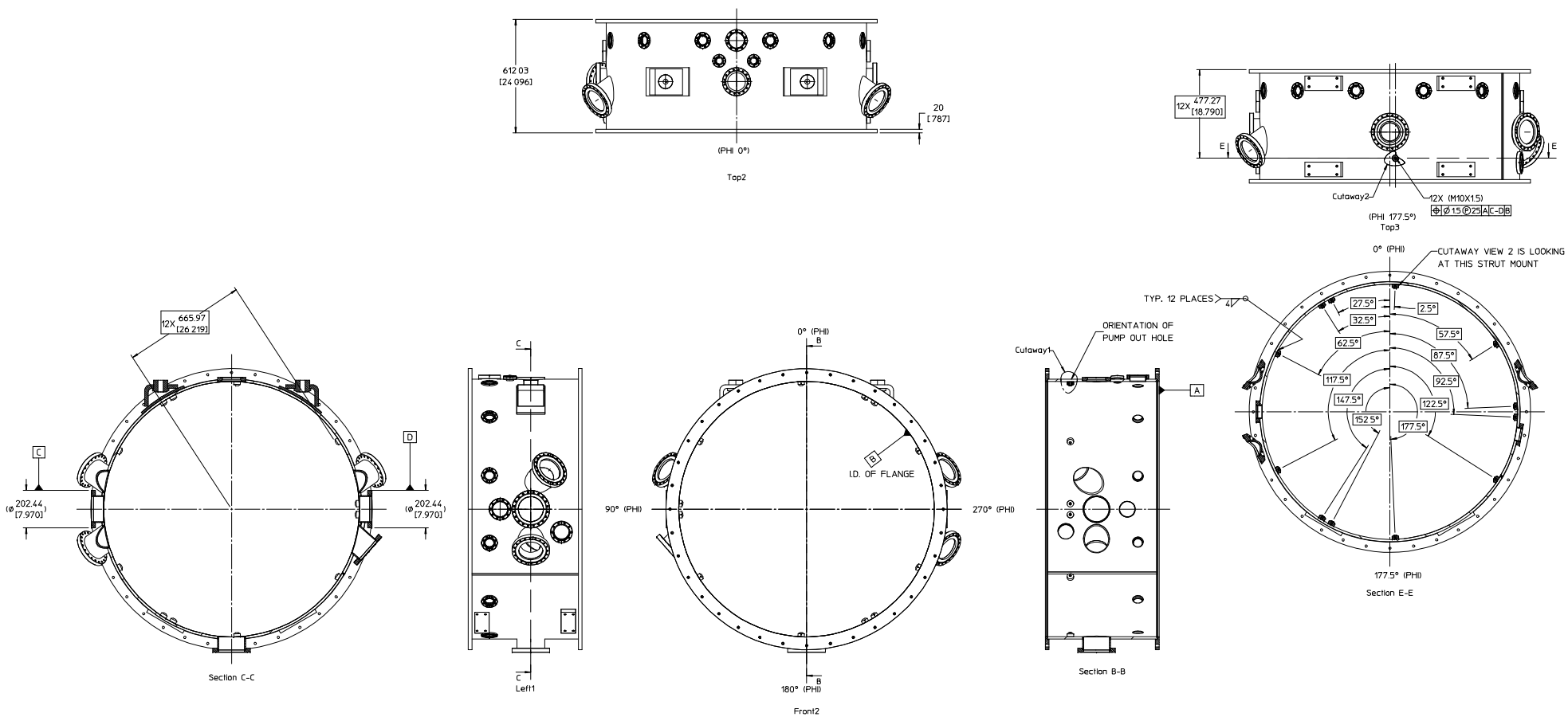

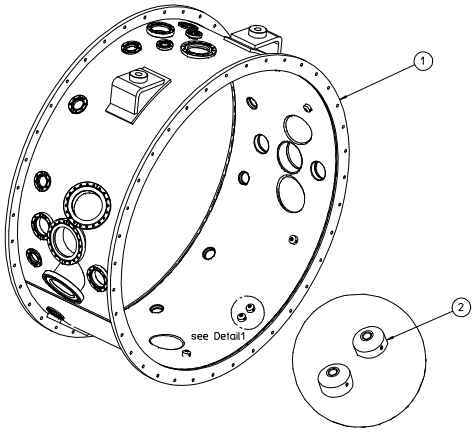

NOTES (UNLESS OTHERWISE SPECIFIED)

1.) ALL DIMENSIONS ARE IN MILLIMETERS (INCHES IN PARENTHESIS ARE FOR REFERENCE ONLY).
2.) ALL DIMENSIONS APPLY AFTER WELDING.
3.) ALL WELD SYMBOLS PER ANSI/AWS/A2.4-1993.
4.) WELDS PER ANSI/AWS/D11-1990
5.) THIS IS A HIGH VACUUM WELDMENT. ALL COMPONENTS ARE TO BE CLEANED PER LBNL SPECIFICATION M20013.
6.) PROTECT FINISHED SEALING SURFACE FROM ALL DAMAGE. TAKE CARE NOT TO DING, SCRATCH, DENT, OR OTHERWISE MARK ANY MACHINED SURFACE.
7.) PROTECT CONFLAT FLANGE KNIFE EDGES AT ALL TIMES.
8.) FINISHED ASSEMBLY TO BE VACUUM TIGHT, LEAK RATE LESS THAN 1 X 10^-9 STD. ATM.- CC PER SECOND HELIUM.
9.) ALL HIDDEN LINES MAY NOT BE SHOWN.
10.) APPROXIMATE WEIGHT 900 LBS.

REQD.	ITEM	PART NO.	DESCRIPTION
12	2	26L283	VACUUM VESSEL STRUT MOUNT
1	1	29H030 (SHEET 5)	VACUUM VESSEL FINAL MACHINING

REV	AUTHOR	APPROVER	DATE	CHANGE DESCRIPTION
A	ikistule			INITIAL REVISION

UNLESS OTHERWISE SPECIFIED
TOLERANCES: .X±.- .XX±.76 .XXX±.---
FRACTIONS: ± -/--
ANGLES: ± 5/25mm
MACH. SURFS.. 1.6√ IN METER
REF: ASME Y14.5M-1994, THREADS ARE CLASS 2
BREAK EDGES 0.16 MAX ON MACHINED WORK
REMOVE BURRS, WELD SPLATTER & LOOSE SCALE

PROJECT NAME: MICE
UNIQUE NUMBER: MU-0009-5826
DO NOT SCALE PRINT
SCALE: 1 : 8
CATEGORY CODE MU1020
THIRD ANGLE PROJECTION

ERNEST ORLANDO LAWRENCE BERKELEY NATIONAL LABORATORY
UNIVERSITY OF CALIFORNIA
MUON IONIZATION COOLING EXPT (MICE)
MICE - RF & COUPLING COIL MODULE
WELDMENT WITH STRUT MOUNTS

SHEET 6 OF 6 | SIZE: E | DWG NO 29H030 | REV A