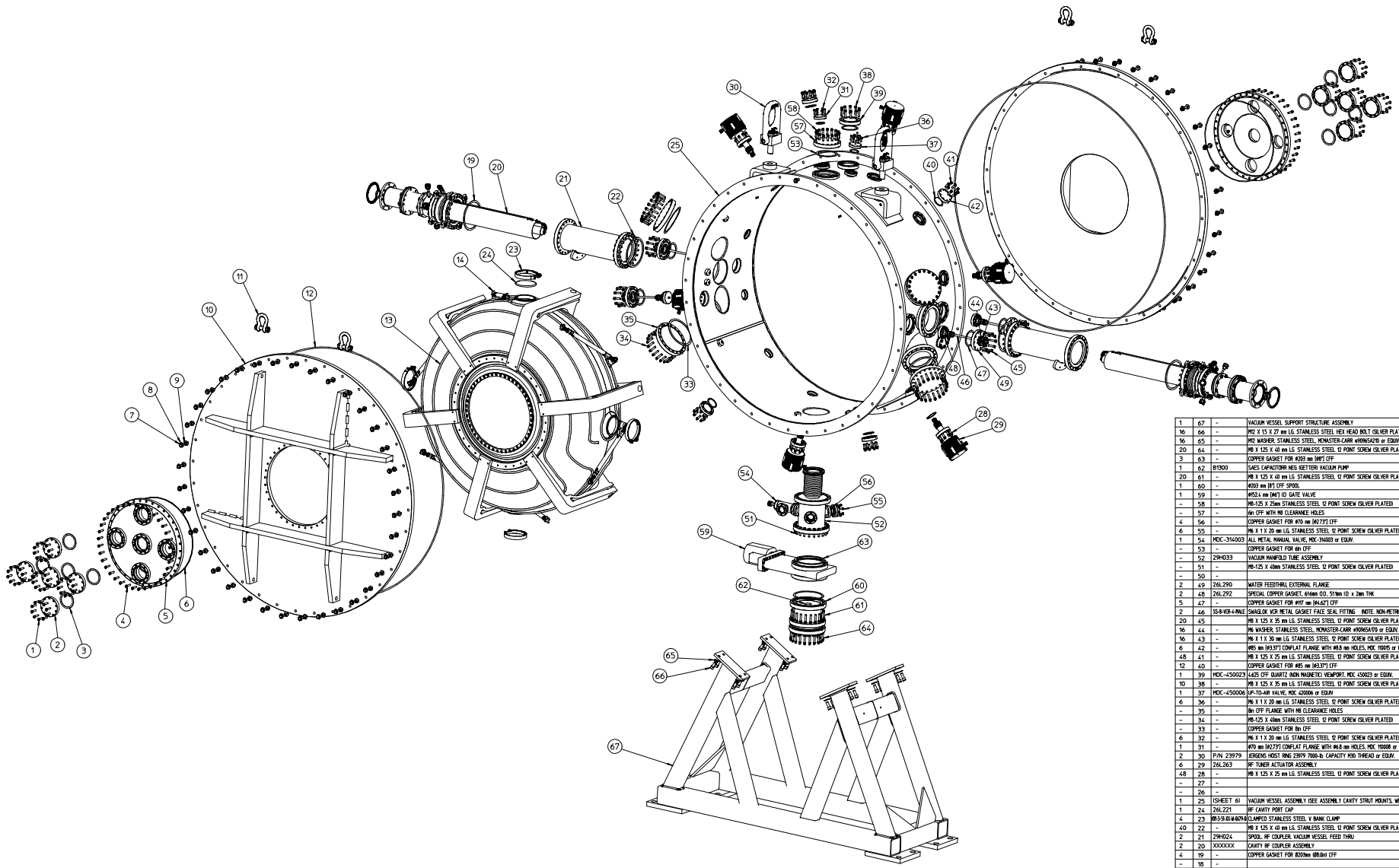

Scale 1:8

REQD	ITEM	PART NO.	DESCRIPTION
1	67	-	VACUUM VESSEL SUPPORT STRUCTURE ASSEMBLY
16	66	-	M12 X 15 X 27 mm LG. STAINLESS STEEL HEX HEAD BOLT (SILVER PLATED)
16	65	-	M12 WASHER, STAINLESS STEEL, MCMASTER-CARR #6696SA210 or EQUIV.
20	64	-	M8 X 1.25 X 40 mm LG STAINLESS STEEL 12 POINT SCREW (SILVER PLATED)
3	63	-	COPPER GASKET FOR Ø203 mm [8"] CFF
1	62	B1300	SAES CAPACITORR NEG (GETTER) VACUUM PUMP
20	61	-	M8 X 1.25 X 40 mm LG STAINLESS STEEL 12 POINT SCREW (SILVER PLATED)
1	60	-	Ø203 mm [8"] CFF SPOOL
1	59	-	Ø152.4 mm [6"] ID GATE VALVE
-	58	-	M6-1.25 X 25mm STAINLESS STEEL 12 POINT SCREW (SILVER PLATED)
-	57	-	6in CFF WITH M8 CLEARANCE HOLES
4	56	-	COPPER GASKET FOR Ø70 mm [2.75"] CFF
6	55	-	M6 X 1 X 20 mm LG. STAINLESS STEEL 12 POINT SCREW (SILVER PLATED)
1	54	MDC-314003	ALL METAL MANUAL VALVE, MDC-314003 or EQUIV.
-	53	-	COPPER GASKET FOR 6in CFF
-	52	29H033	VACUUM MANIFOLD TUBE ASSEMBLY
-	51	-	M6-1.25 X 40mm STAINLESS STEEL 12 POINT SCREW (SILVER PLATED)
-	50	-	
2	49	26L290	WATER FEEDTHRU, EXTERNAL FLANGE
2	48	26L292	SPECIAL COPPER GASKET, 616mm O.D. 511mm ID x 2mm THK
5	47	-	COPPER GASKET FOR Ø117 mm [4.62"] CFF
2	46	SS-8-VCR-4-MALE	SWAGLOK VCR METAL GASKET FACE SEAL FITTING (NOTE: NON-METRIC THREADS)
20	45		M8 X 1.25 X 35 mm LG. STAINLESS STEEL 12 POINT SCREW (SILVER PLATED)
16	44	-	M6 WASHER, STAINLESS STEEL, MCMASTER-CARR #9096SA179 or EQUIV.
16	43	-	M6 X 1 X 30 mm LG. STAINLESS STEEL 12 POINT SCREW (SILVER PLATED)
6	42	-	Ø85 mm [#3.37"] CONFLAT FLANGE WITH Ø8.8 mm HOLES, MDC 110015 or EQUIV.
48	41	-	M8 X 1.25 X 25 mm LG. STAINLESS STEEL 12 POINT SCREW (SILVER PLATED)
12	40	-	COPPER GASKET FOR Ø85 mm [#3.37"] CFF
1	39	MDC-450023	4.625 CFF QUARTZ (NON MAGNETIC) VIEWPORT, MDC 450023 or EQUIV.
10	38	-	M8 X 1.25 X 35 mm LG. STAINLESS STEEL 12 POINT SCREW (SILVER PLATED)
1	37	MDC-450006	UP-TO-AIR VALVE, MDC 420006 or EQUIV.
6	36	-	M6 X 1 X 20 mm LG. STAINLESS STEEL 12 POINT SCREW (SILVER PLATED)
-	35	-	8in CFF FLANGE WITH M8 CLEARANCE HOLES
-	34	-	M8-1.25 X 40mm STAINLESS STEEL 12 POINT SCREW (SILVER PLATED)
-	33	-	COPPER GASKET FOR 8in CFF
6	32	-	M6 X 1 X 20 mm LG. STAINLESS STEEL 12 POINT SCREW (SILVER PLATED)
1	31	-	Ø70 mm [#2.75"] CONFLAT FLANGE WITH Ø6.0 mm HOLES, MDC 110008 or EQUIV.
2	30	P/N 23979	JERGENS HOIST RING 23979 7000-lb CAPACITY M30 THREAD or EQUIV.
6	29	26L263	RF TUNER ACTUATOR ASSEMBLY
48	28	-	M8 X 1.25 X 25 mm LG. STAINLESS STEEL 12 POINT SCREW (SILVER PLATED)
-	27	-	
-	26	-	
1	25	(SHEET 6)	VACUUM VESSEL ASSEMBLY (SEE ASSEMBLY CAVITY STRUT MOUNTS, WELDING)
1	24	26L221	RF CAVITY PORT CAP
4	23	100-3-51-XX-N-6679-A	CLAMPCO STAINLESS STEEL V BANK CLAMP
40	22	-	M8 X 1.25 X 40 mm LG. STAINLESS STEEL 12 POINT SCREW (SILVER PLATED)
2	21	29H024	SPOOL, RF COUPLER, VACUUM VESSEL FEED THRU
2	20	XXXXXX	CAVITY RF COUPLER ASSEMBLY
4	19	-	COPPER GASKET FOR Ø203mm (Ø8.0in) CFF
-	18	-	
-	17	-	
-	16	-	
-	15	-	
12	14	-	M10 X 15 X 25mm LG STAINLESS STEEL SHCS (SILVER PLATED)
1	13	XXXXXX	RF CAVITY ASSEMBLY WITH TUNERS AND STRUTS
2	12	-	O-RING, Ø6.35 mm [Ø1/4"] CROSS SECTION, CUT LENGTH TO FIT (NOMINAL I.D. 1427.50 mm [56.2"])
4	11	P/N 36541	LIFTING RING, CARR-LANE 36541 or EQUIV.
2	10	29B914	15¼ mm DIAMETER FLANGED COVER PLATE ASSEMBLY
72	9	-	M10 NUT, STAINLESS STEEL
144	8	-	M10 WASHER, STAINLESS STEEL, MCMASTER-CARR #6696SA200 or EQUIV
72	7	-	M10 X 1.5 X 40 mm LG. STAINLESS STEEL HEX HEAD BOLT
2	6	-	O-RING, Ø3.175 mm [Ø1/8"] CROSS SECTION, 457 mm [Ø18 inch] I.D., PARKER 2-284 CLASS -1 or EQUIV.
2	5	29B913	20 INCH DIAMETER FLANGE PLATE ASSEMBLY
72	4	-	M8 X 1.25 X 35 mm LG. STAINLESS STEEL 12 POINT SCREW (SILVER PLATED)
10	3	-	COPPER GASKET FOR Ø117 mm [4.62"] CFF
10	2	-	Ø117 mm [4.62"] CONFLAT FLANGE WITH Ø8.8 mm HOLES, MDC 110022 or EQUIV
100	1	-	M8 X 1.25 X 35 mm LG. STAINLESS STEEL 12 POINT SCREW (SILVER PLATED)

NOTES
1) THIS ASSEMBLY IS DESIGN FOR USE WITH METRIC FASTENERS

REV	AUTHOR	APPROVER	DATE	CHANGE DESCRIPTION
A	lkisfule			INITIAL REVISION

UNLESS OTHERWISE SPECIFIED
TOLERANCES: .X± .- .XX± .-- .XXX± .---
FRACTIONS: ± -/--
ANGLES: ± - °/INCH
MACH. SURFS. 125√ MRMS
REF:KONE Y14.5M-1994, THREADS ARE CLASS 2
BREAK EDGES .016 MAX. ON MACHINED WORK
REMOVE BURRS, WELD SPLATTER & LOOSE SCALE

PROJECT NAME: MICE
UNIQUE NUMBER: MU-0009-5826
DO NOT SCALE PRINT
CURRENT CODE:
SCALE: 1 : 10 | MU 1 0 5 2 0
THIRD ANGLE PROJECTION

ERNEST ORLANDO LAWRENCE BERKELEY NATIONAL LABORATORY
UNIVERSITY OF CALIFORNIA
MUON IONIZATION COOLING EXPT. (MICE)
MICE - RF & COUPLING COIL MODULE
SINGLE CAVITY VACUUM VESSEL COMPLETE.NEW FRAME 20150116

SHEET 1 OF 6 | SIZE: E | DWG NO 29H030 | REV A

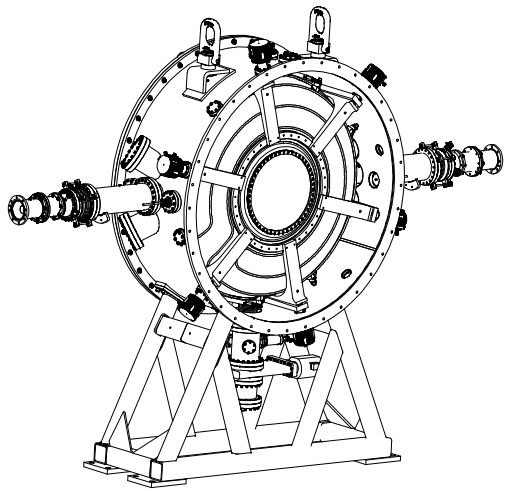

(VACUUM VESSEL COVER REMOVED)

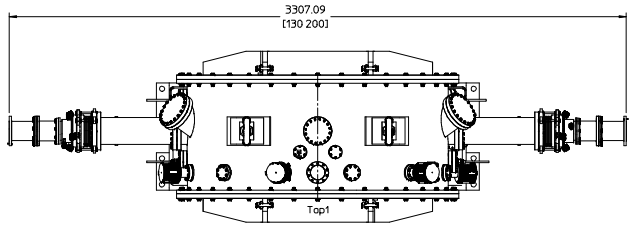

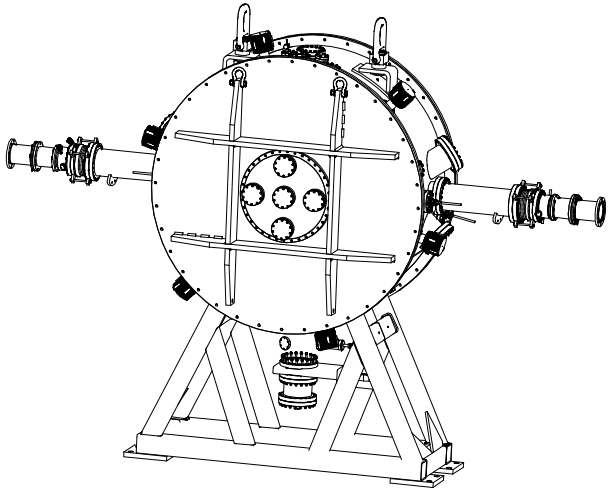

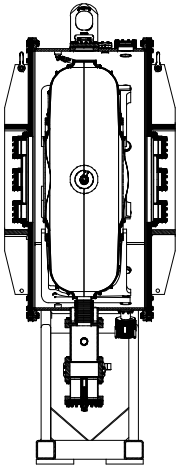

Section A-A

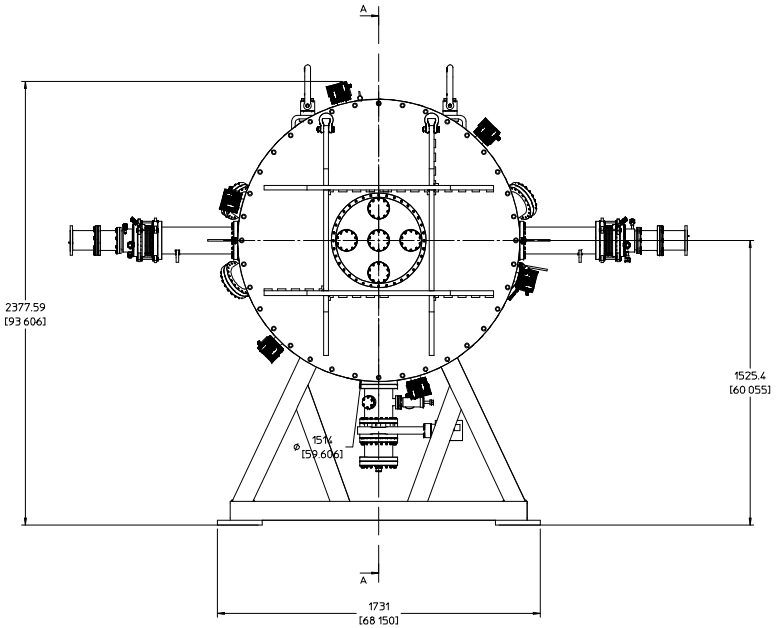

Front1

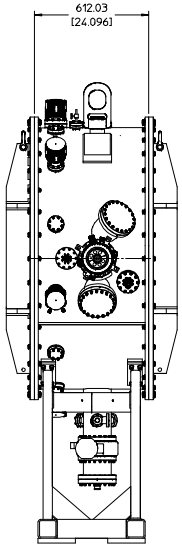

Right1

NOTES:
1) THIS ASSEMBLY IS DESIGNED FOR USE WITH METRIC FASTENERS.

REV	AUTHOR	APPROVER	DATE	CHANGE DESCRIPTION
A	lkisfule			INITIAL REVISION

UNLESS OTHERWISE SPECIFIED
TOLERANCES: X.- ±.XX±.76 .XXX±.--- FRACTIONS: ± -/-- ANGLES: ± 1 0°/ 25mm MACH. SURFS. 1.6√ RMS
REF: ASME Y14.5M-1994, THREADS ARE CLASS 2
BREAK EDGES .016 MAX. ON MACHINED WORK
REMOVE BURRS, WELD SPLATTER & LOOSE SCALE

PROJECT NAME MICE
UNIQUE NUMBER: MU-0009-5826
DO NOT SCALE PRINT
CATEGORY CODE:
SCALE: 1 : 10 MU1020
THIRD ANGLE PROJECTION

ERNEST ORLANDO LAWRENCE BERKELEY NATIONAL LABORATORY
UNIVERSITY OF CALIFORNIA

MUON IONIZATION COOLING EXPT. (MICE)
MICE - RF & COUPLING COIL MODULE
SINGLE CAVITY VACUUM VESSEL, OVERALL DIMENSIONS

SHEET 2 OF 6 SIZE: E DWG NO 29H030 REV A

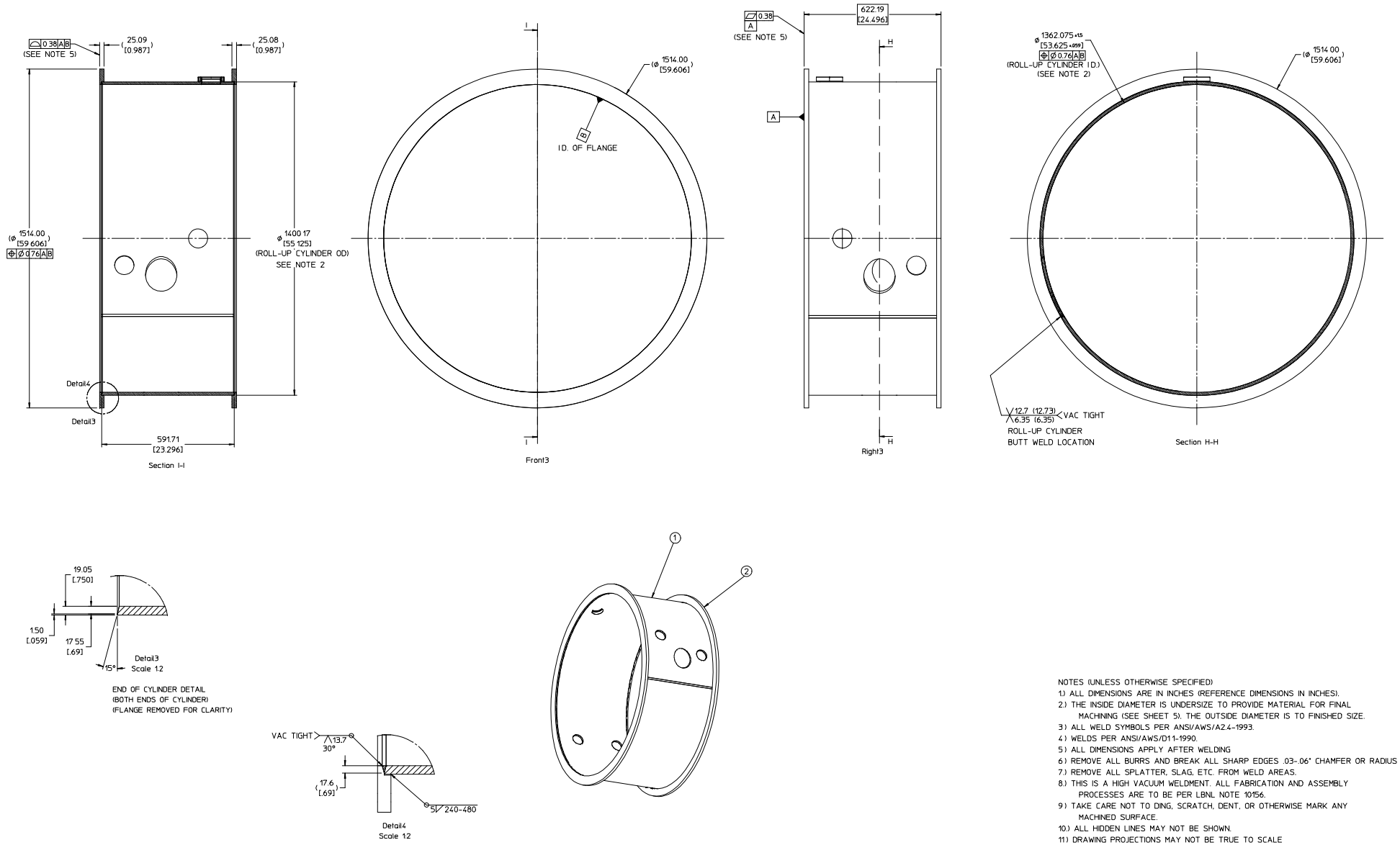

NOTES (UNLESS OTHERWISE SPECIFIED)

1.) ALL DIMENSIONS ARE IN INCHES (REFERENCE DIMENSIONS IN INCHES).
2.) THE INSIDE DIAMETER IS UNDERSIZE TO PROVIDE MATERIAL FOR FINAL MACHINING (SEE SHEET 5). THE OUTSIDE DIAMETER IS TO FINISHED SIZE.
3.) ALL WELD SYMBOLS PER ANSI/AWS/A2.4-1993.
4.) WELDS PER ANSI/AWS/D11-1990.
5.) ALL DIMENSIONS APPLY AFTER WELDING
6.) REMOVE ALL BURRS AND BREAK ALL SHARP EDGES .03-.06" CHAMFER OR RADIUS
7.) REMOVE ALL SPLATTER, SLAG, ETC. FROM WELD AREAS.
8.) THIS IS A HIGH VACUUM WELDMENT. ALL FABRICATION AND ASSEMBLY PROCESSES ARE TO BE PER LBNL NOTE 10156.
9.) TAKE CARE NOT TO DING, SCRATCH, DENT, OR OTHERWISE MARK ANY MACHINED SURFACE.
10.) ALL HIDDEN LINES MAY NOT BE SHOWN.
11.) DRAWING PROJECTIONS MAY NOT BE TRUE TO SCALE
12.) APPROXIMATE WEIGHT: 925 lbs.

REV	AUTHOR	APPROVER	DATE	CHANGE DESCRIPTION
A	lkistule			INITIAL REVISION

REQD	ITEM	DWG#	DESCRIPTION
1	1		VACUUM VESSEL ROLL UP CYLINDER SS 304L
2	1	29B918	1514MM DIAMETER FLANGE, NO HOLES

UNLESS OTHERWISE SPECIFIED
TOLERANCES: .X± .- .XX± .76 .XXX± .---
FRACTIONS: ± -/--
ANGLES: ± 1 0/25mm
MACH. SURFS. 1.6√ BETTER
REF: ASME Y14.5M-1994, THREADS ARE CLASS 2
BREAK EDGES .016 MAX. ON MACHINED WORK
REMOVE BURRS, WELD SPLATTER & LOOSE SCALE

PROJECT NAME: MICE
UNIQUE NUMBER: MU-0009-5826
DO NOT SCALE PRINT
CATEGORY CODE: MU1020
SCALE: 1:6
THIRD ANGLE PROJECTION

ERNEST ORLANDO LAWRENCE BERKELEY NATIONAL LABORATORY
UNIVERSITY OF CALIFORNIA
MUON IONIZATION COOLING EXPT. (MICE)
MICE - RF & COUPLING COIL MODULE
VACUUM VESSEL CYLINDER WELDMENT

SHEET 3 OF 6 | SIZE: E | DWG NO 29H030 | REV A

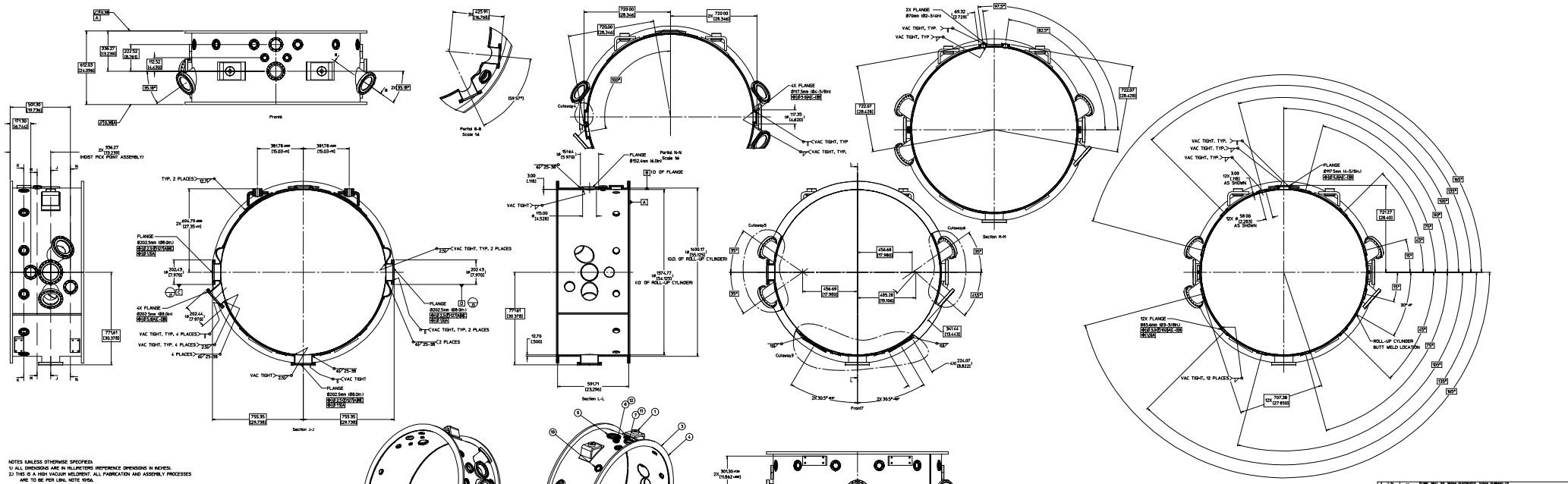

NOTES (UNLESS OTHERWISE SPECIFIED):
1) ALL DIMENSIONS ARE IN MILLIMETERS (REFERENCE DIMENSIONS IN INCHES).
2) THIS IS A HIGH VACUUM WELDMENT. ALL FABRICATION AND ASSEMBLY PROCESSES ARE TO BE PER LBNL NOTE 10156.
3) ALL CONFLAT FLANGE TRUE POSITIONS ARE RELATIVE TO AN AXIS WHICH IS PERPENDICULAR TO THE FLANGE FACE AND CENTERED WITH THE OUTSIDE DIAMETER.
4) ALL DIMENSIONS APPLY AFTER WELDING.
5) ALL WELD SYMBOLS PER ANSI/AWS/A2.4-1993 WELDS PER ANSI/AWS/D11-1990
6) INDICATED WELDS ARE IN ADDITION TO INTERNAL VACUUM WELDS. USE FILLER.
7) PROTECT FINISHED SEALING SURFACE FROM ALL DAMAGE. TAKE CARE NOT TO DING, SCRATCH, DENT, OR OTHERWISE MARK ANY MACHINED SURFACE.
8) PROTECT CONFLAT FLAT KNIFE EDGE AT ALL TIMES.
9) FINISHED ASSEMBLY TO BE VACUUM TIGHT. LEAK RATE LESS THAN 1 X 10-9 STD. ATM.- CC PER SECOND HELIUM.
10) ALL HIDDEN LINES MAY NOT BE SHOWN.
11) APPROXIMATE WEIGHT 850 lbs

1	14	--	CONF. SEAL SS, 304SS SUSTAINED, 304SS SUPPORTED
2	13	--	FLANGE, 8.00 Dia. 8.00 L 304L SS, NON-ROTATABLE, 16 TAPPED HOLES
2	12	--	FLANGE, 8.00 Dia. 2.00 L 304L SS, NON-ROTATABLE, 16 TAPPED HOLES
2	11	--	FLANGE, 8.00 Dia. 2.00 L 304L SS, NON-ROTATABLE, 16 TAPPED HOLES
12	10	--	FLANGE, 8.00 Dia. 2.00 L 304L SS, NON-ROTATABLE, 16 TAPPED HOLES
1	9	--	FLANGE, 8.00 Dia. 8.00 L 304L SS, NON-ROTATABLE, 16 TAPPED HOLES
1	8	--	FLANGE, 8.00 Dia. 8.00 L 304L SS, NON-ROT. HS CLEARANCE HOLES
1	7	--	TUBE, 304L SS, 88.9 mm 3.5 mm O.D. MINI BIAXIS WALL
2	6	--	TUBE 304L SS, 19.10 mm 1.00 mm O.D. 1.65 mm CURVE WALL
1	5	--	TUBE 304L SS, 12.0 mm 0.50 mm O.D. 0.9 mm BIAXIS WALL
1	4	2HX8	HEXAGON SOCKET HEAD CAP SCREW
2	3	2HW8	WASHER SANDSTRIP FLANGED HS HOLES
4	2	2HX8	SUPPORT STRUCTURE ASSEMBLY MOUNTING PLATE
2	1	2HX8	HOIST PICK POINT WELDMENT ASSEMBLY
QTY	ITEM	PART NO.	DESCRIPTION

UNLESS OTHERWISE SPECIFIED:
DIM: IN. TOL: .XXX ±.010
.XX ±.030
FRACTIONS ±1/16
ANGLES ±1/2 DEG
MATL. SPEC. 1.4.2.4
DO NOT SCALE DRAWING
DIMENSIONS APPLY AFTER PLATING
DIMENSIONS APPLY AFTER WELDING
DIMENSIONS APPLY AFTER PAINTING
DIMENSIONS APPLY AFTER ASSEMBLY
DIMENSIONS APPLY AFTER PRESSURE TEST
DIMENSIONS APPLY AFTER HEAT TREATMENT
DIMENSIONS APPLY AFTER CLEANING
DIMENSIONS APPLY AFTER PASSIVATION
DIMENSIONS APPLY AFTER ELECTROPOLISHING
DIMENSIONS APPLY AFTER ELECTROPLATING
DIMENSIONS APPLY AFTER ANODIZING
DIMENSIONS APPLY AFTER PHOSPHATE COATING
DIMENSIONS APPLY AFTER CHEMICAL FILM
DIMENSIONS APPLY AFTER PRIMER COATING
DIMENSIONS APPLY AFTER FINISH COATING
DIMENSIONS APPLY AFTER PRESSURE TEST
DIMENSIONS APPLY AFTER HEAT TREATMENT
DIMENSIONS APPLY AFTER CLEANING
DIMENSIONS APPLY AFTER PASSIVATION
DIMENSIONS APPLY AFTER ELECTROPOLISHING
DIMENSIONS APPLY AFTER ELECTROPLATING
DIMENSIONS APPLY AFTER ANODIZING
DIMENSIONS APPLY AFTER PHOSPHATE COATING
DIMENSIONS APPLY AFTER CHEMICAL FILM
DIMENSIONS APPLY AFTER PRIMER COATING
DIMENSIONS APPLY AFTER FINISH COATING

REV	AUTHOR	APPROVED	DATE	CHANGE DESCRIPTION
A	Bristol			INITIAL REVISION

ERNEST ORLANDO LAWRENCE BERKELEY NATIONAL LABORATORY
UNIVERSITY OF CALIFORNIA

MAIN INSULATION COIL (HS) EXPT. (HCEX)
HIGH - GP & CONFLAT (HG) (CI) MODULE
VACUUM VESSEL WELDMENT FLANGES

SCALE: 1 : 8 | 04/15/05 | SIZE: D | CODE: 4 F 8 | 31.8 | 5 | DWG: 29H030 | REV: A

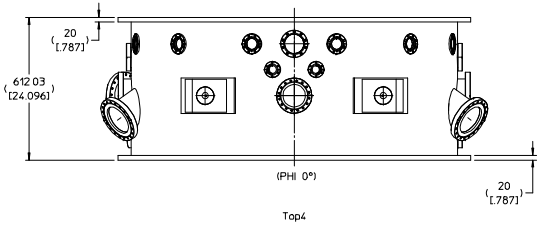

Top4

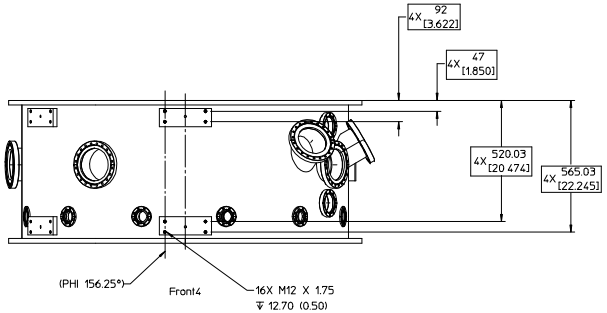

Front4

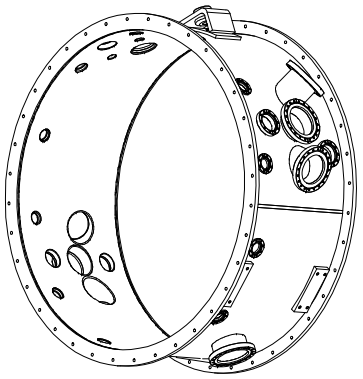

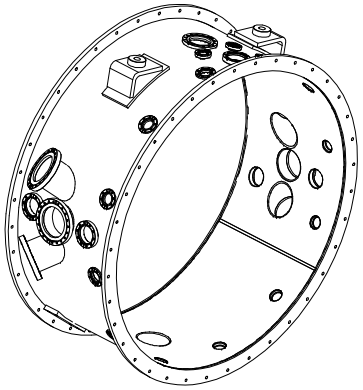

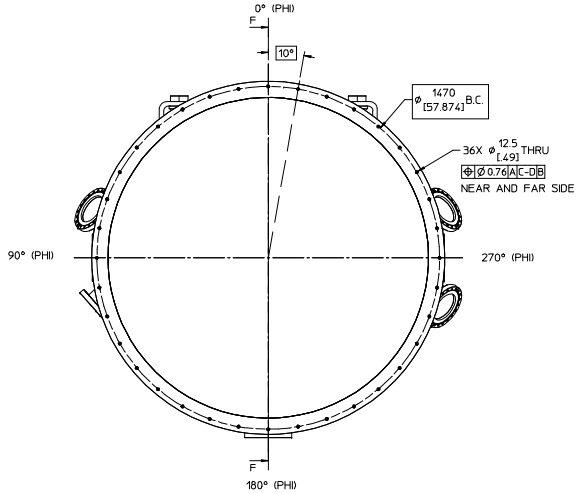

Back1

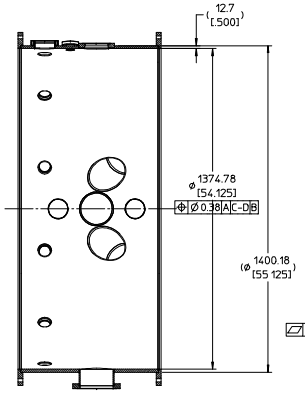

Section F-F

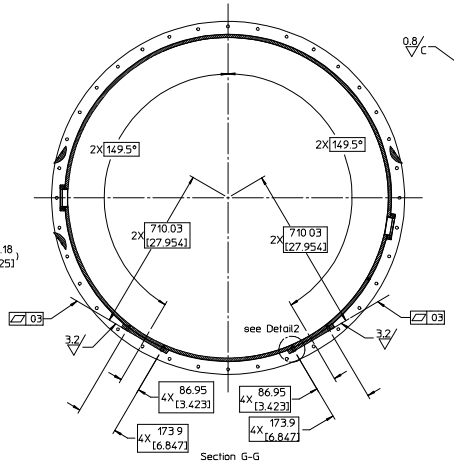

Section G-G

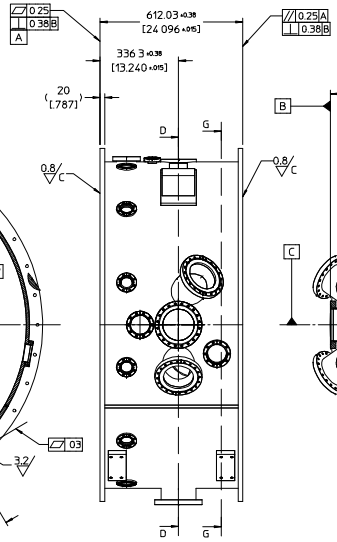

Right2

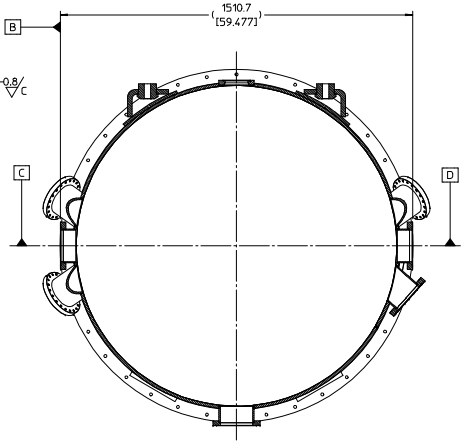

Section D-D

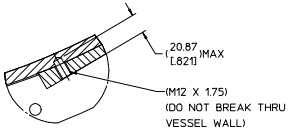

Detail2
Scale 1:2

NOTES (UNLESS OTHERWISE SPECIFIED):

1.) ALL DIMENSIONS ARE IN MILLIMETERS (REFERENCE DIMENSIONS IN INCHES).
2.) THIS IS AN ULTRA HIGH VACUUM WELDMENT. ALL FABRICATION AND ASSEMBLY PROCESSES ARE TO BE PER LBL NOTE 10156.
3.) PROTECT FINISHED SEALING SURFACE FROM ALL DAMAGE. TAKE CARE NOT TO DING, SCRATCH, DENT, OR OTHERWISE MARK ANY MACHINED SURFACE.
4.) PROTECT CONFLAT FLANGE KNIFE EDGE AT ALL TIMES.
5.) FINISHED ASSEMBLY TO BE VACUUM TIGHT. LEAK RATE LESS THAN 1 X 10^-9 STD. ATM.- CC PER SECOND HELIUM.
6.) ALL HIDDEN LINES MAY NOT BE SHOWN.
7.) APPROXIMATE WEIGHT: 1000 LBS.

REV	AUTHOR	APPROVER	DATE	CHANGE DESCRIPTION
A	lkisfule			INITIAL REVISION

REQD.	ITEM	PART NO.	DESCRIPTION
1	1	29H030 (SHEET 4)	VACUUM VESSEL WELDMENT, FLANGES

UNLESS OTHERWISE SPECIFIED
TOLERANCES: X± .- XX± .76 XXX± .---
FRACTIONS: ± -/--
ANGLES: ± 5/25mm
MACH. SURFS. 1.6√ RMS
REF: ASME Y14.5M-1994, THREADS ARE CLASS 2
BREAK EDGES .016 MAX. ON MACHINED WORK
REMOVE BURRS, WELD SPLATTER & LOOSE SCALE

PROJECT NAME MICE
UNIQUE NUMBER: MU-0009-5826
DO NOT SCALE PRINT
CATEGORY CODE: MU1020
SCALE: 1 : 8
THIRD ANGLE PROJECTION

ERNEST ORLANDO LAWRENCE BERKELEY NATIONAL LABORATORY
UNIVERSITY OF CALIFORNIA

MUON IONIZATION COOLING EXPT. (MICE)
MICE - RF & COUPLING COIL MODULE
VACUUM VESSEL FINAL MACHINING

SHEET 5 OF 6 SIZE: E DWG NO 29H030 REV A

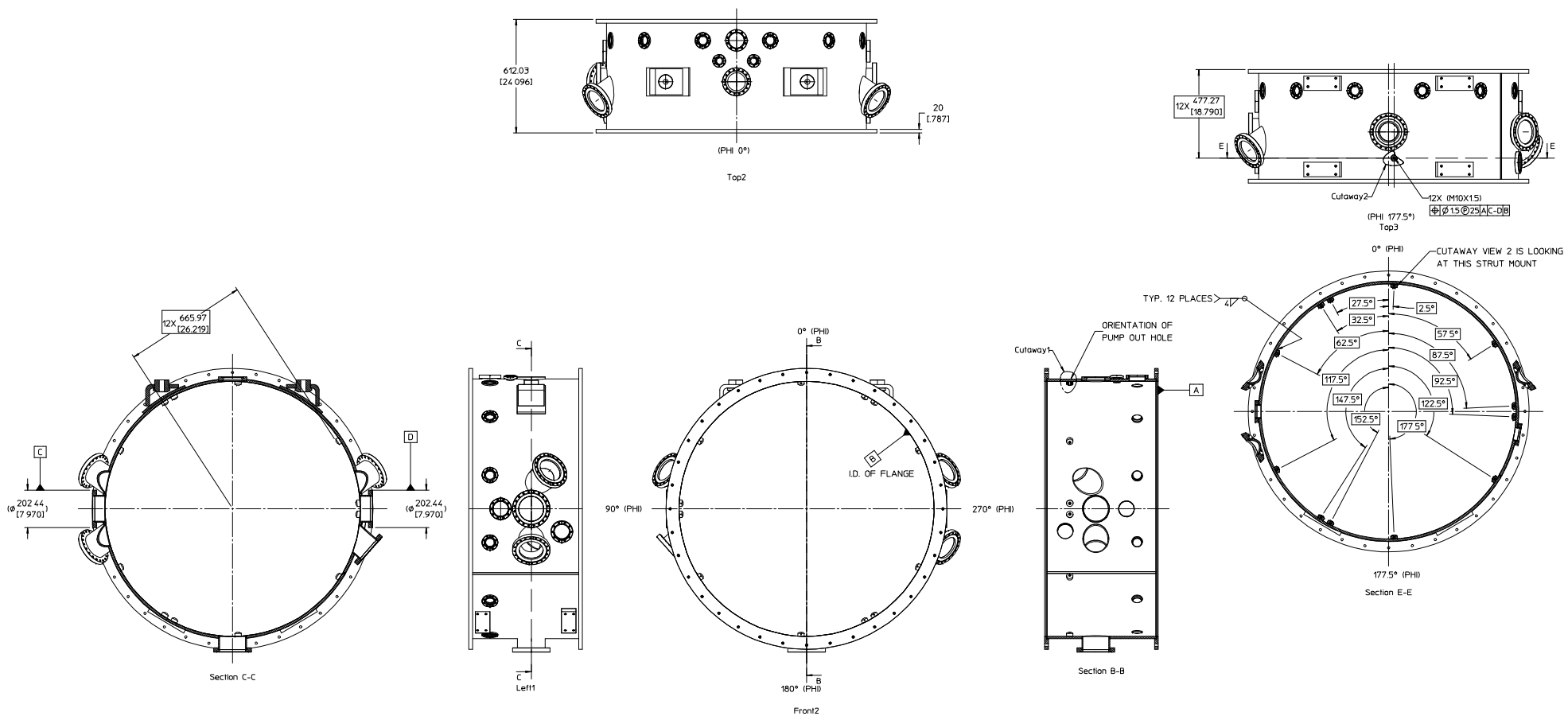

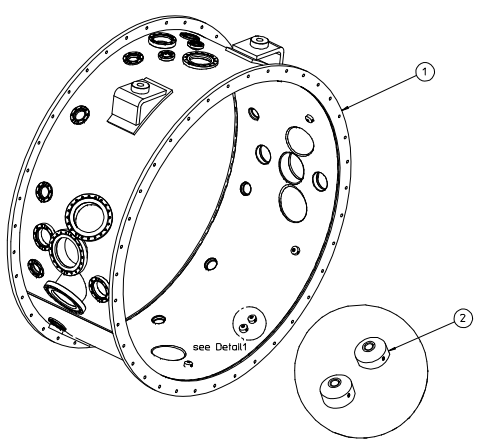

Detail1
Scale 1:2

NOTES: (UNLESS OTHERWISE SPECIFIED)

1.) ALL DIMENSIONS ARE IN MILLIMETERS (INCHES IN PARENTHESIS ARE FOR REFERENCE ONLY).
2.) ALL DIMENSIONS APPLY AFTER WELDING.
3.) ALL WELD SYMBOLS PER ANSI/AWS/A2.4-1993.
4.) WELDS PER ANSI/AWS/D1.1-1990.
5.) THIS IS A HIGH VACUUM WELDMENT. ALL FABRICATION AND ASSEMBLY PROCESSES ARE TO BE PER LBNL NOTE 10156.
6.) PROTECT FINISHED SEALING SURFACE FROM ALL DAMAGE. TAKE CARE NOT TO DING, SCRATCH, DENT, OR OTHERWISE MARK ANY MACHINED SURFACE.
7.) PROTECT CONFLAT FLANGE KNIFE EDGES AT ALL TIMES.
8.) FINISHED ASSEMBLY TO BE VACUUM TIGHT, LEAK RATE LESS THAN 1 X 10^-9 STD. ATM.- CC PER SECOND HELIUM.
9.) ALL HIDDEN LINES MAY NOT BE SHOWN
10.) APPROXIMATE WEIGHT: 1260 LBS.

REQD.	ITEM	PART NO.	DESCRIPTION
12	2	26L283	VACUUM VESSEL STRUT MOUNT
1	1	29H030 (SHEET 5)	VACUUM VESSEL FINAL MACHINING

REV	AUTHOR	APPROVER	DATE	CHANGE DESCRIPTION
A	lkistule			INITIAL REVISION

UNLESS OTHERWISE SPECIFIED
TOLERANCES: .X± .- .XX± .76 .XXX± .---
FRACTIONS: ± -/--
ANGLES: ± 5/25mm
MACH. SURFS. 1.6√ IN MICRO
REF: KOPE Y14.5M-1994, THREADS ARE CLASS 2
BREAK EDGES .016 MAX. ON MACHINED WORK
REMOVE BURRS, WELD SPLATTER & LOOSE SCALE

PROJECT NAME: MICE
UNIQUE NUMBER: MU-0009-5826
DO NOT SCALE PRINT
SCALE: 1:8
CATEGORY CODE: MU1020
THIRD ANGLE PROJECTION

ERNEST ORLANDO LAWRENCE BERKELEY NATIONAL LABORATORY
UNIVERSITY OF CALIFORNIA
MUON IONIZATION COOLING EXPT. (MICE)
MICE - RF & COUPLING COIL MODULE
WELDMENT WITH STRUT MOUNTS

SHEET 6 OF 6 | SIZE: E | DWG NO 29H030 | REV A