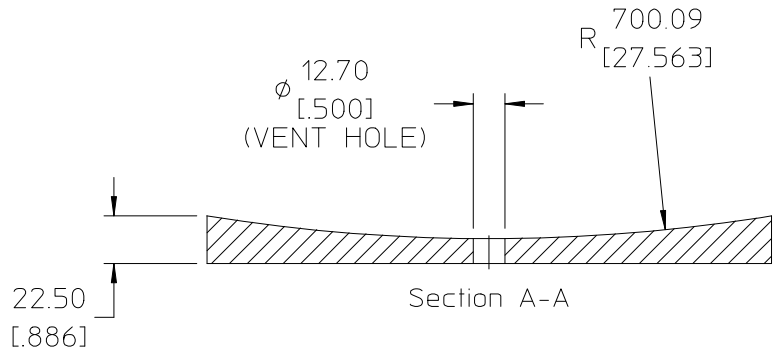

EXTRA MATERIAL ADDED
TO BE REMOVED AT FINAL MACHINING

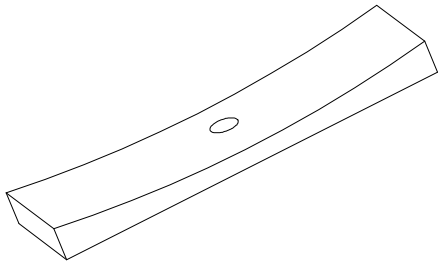

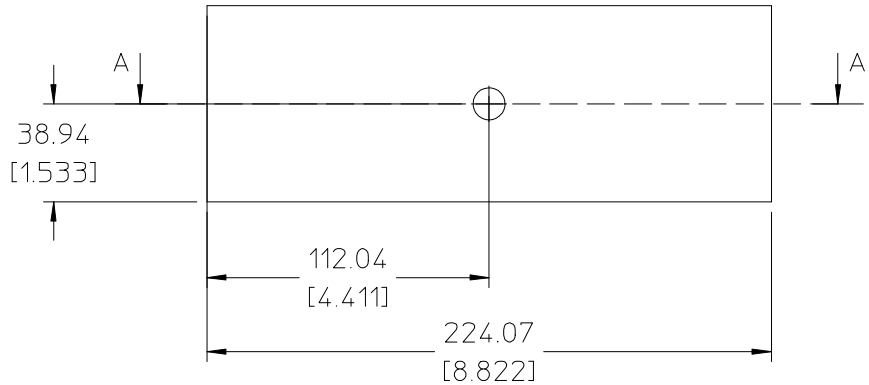

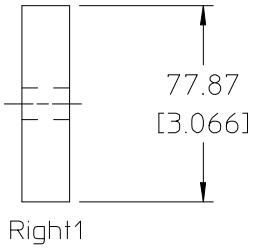

REV	AUTHOR	APPROVER	DATE	CHANGE DESCRIPTION
A	lkistule			INITIAL REVISION

UNLESS OTHERWISE SPECIFIED
TOLERANCES: .X± - .XX±.76 .XXX±.---
FRACTIONS: ± -/--
ANGLES: ± 1.0°/INCH
MACH. SURFS.: 6.3 OR BETTER
REF:ASME Y14.5M-1994, THREADS ARE CLASS 2
BREAK EDGES .016 MAX. ON MACHINED WORK
REMOVE BURRS, WELD SPLATTER & LOOSE SCALE

MAT 2 . NOTES:
MAT 1: PLATE, STAINLESS STEEL 304L NOTES:

PROJECT NAME: Advanced Light Source
UNIQUE NUMBER: MU-0009-6790
DO NOT SCALE PRINT
SCALE: 1 : 2
CATEGORY CODE. MU1020
THIRD ANGLE PROJECTION

ERNEST ORLANDO LAWRENCE
BERKELEY NATIONAL LABORATORY
UNIVERSITY OF CALIFORNIA

MUON IONIZATION COOLING EXPT. (MICE)
MICE - RF & COUPLING COIL MODULE
VACUUM VESSEL, SUPPORT FRAME MOUNTING PLATE

SHEET 1 OF 1 | SIZE: B | DWG NO: 29H029 | REV A