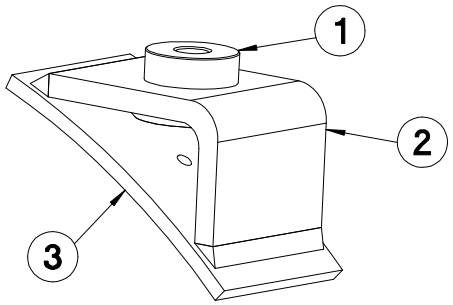

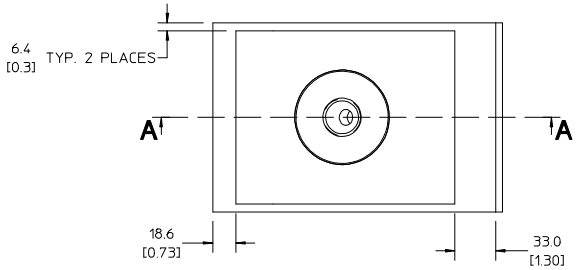

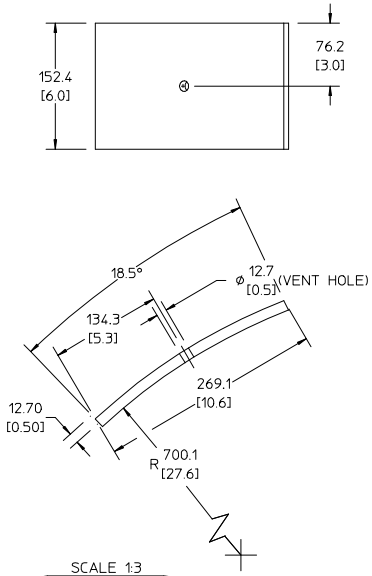

SCALE 1:3

PART 3

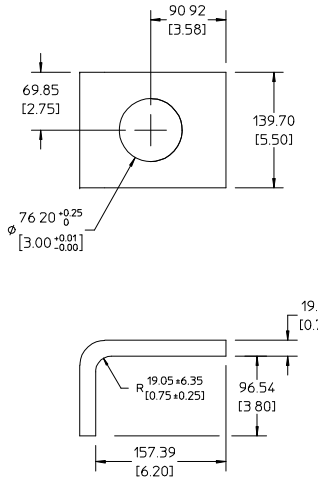

SCALE 1:3

PART 2

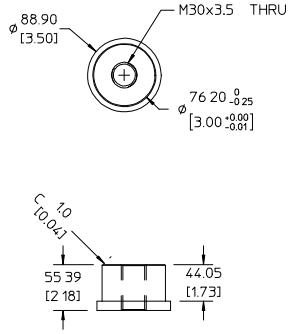

SCALE 1:3

PART 1

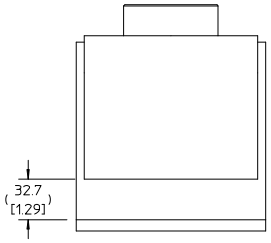

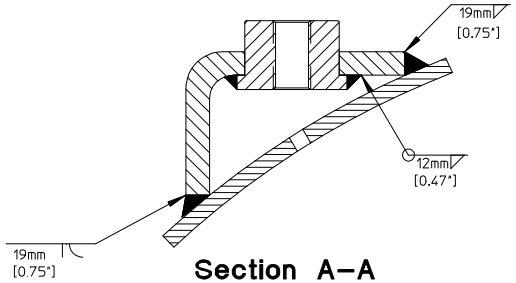

Section A–A

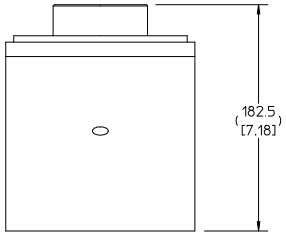

NOTES (UNLESS OTHERWISE SPECIFIED)

1. ALL DIMENSIONS ARE IN MILLIMETERS.
   (DIMENSION IN PARENTHESIS ARE IN INCHES)
2. ALL WELD SYMBOLS PER ANSI/AWS/A2.4-1993.
3. WELDS PER ANSI/AWS/D1.1-1990.
4. ALL DIMENSIONS APPLY AFTER WELDING.
5. ALL HIDDEN LINES MAY NOT BE SHOWN.

ITEM	REQ'D	MATERIAL	DESCRIPTION
3	1	304L STAINLESS STEEL	HOIST PICK POINT, MOUNTING PLATE
2	1	304L STAINLESS STEEL	HOIST PICK POINT, L-PLATE
1	1	304L STAINLESS STEEL	HOIST PICK POINT, THREADED INSERT

REV	AUTHOR	APPROVER	DATE	CHANGE DESCRIPTION
A	ajdemell			INITIAL REVISION

UNLESS OTHERWISE SPECIFIED
TOLERANCES: X ± 1.5 .XX ± .76 .XXX ± .--
FRACTIONS: ± -/--
ANGLES: ± -.-°/INCH
MACH SURFS . 3 2√ OR BETTER
REF ASME Y14.5M-1994, THREADS ARE CLASS 2
BREAK EDGES .016 MAX. ON MACHINED WORK
REMOVE BURRS, WELD SPLATTER & LOOSE SCALE

PROJECT NAME: MICE
UNIQUE NUMBER: MU-0009-6500
DO NOT SCALE PRINT
CATEGORY CODE: MU1020
SCALE: 1 : 2
THIRD ANGLE PROJECTION

ERNEST ORLANDO LAWRENCE BERKELEY NATIONAL LABORATORY
UNIVERSITY OF CALIFORNIA

MUON IONIZATION COOLING EXPT. (MICE)
MICE - RF & COUPLING COIL MODULE
PICK POINT WELDMENT ASSY

SHEET 1 OF 1 | SIZE: D | DWG NO: 29H028 | REV A