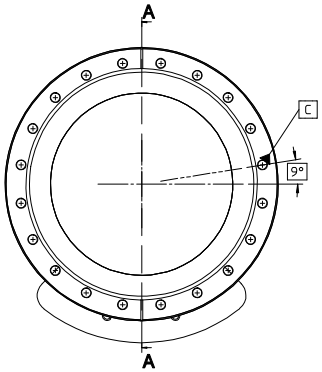

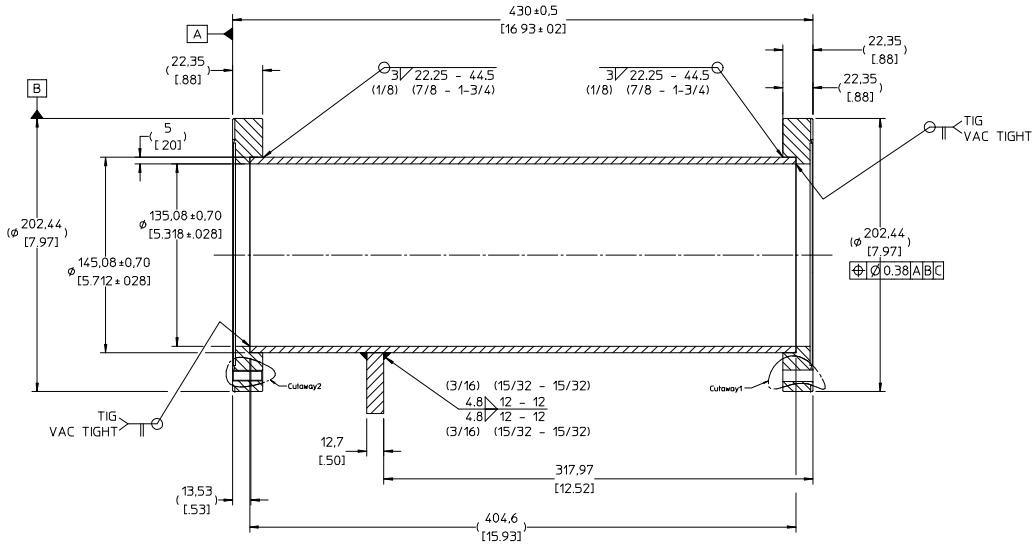

Section A–A

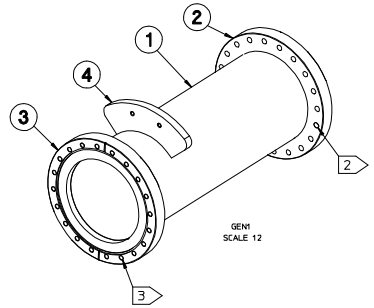

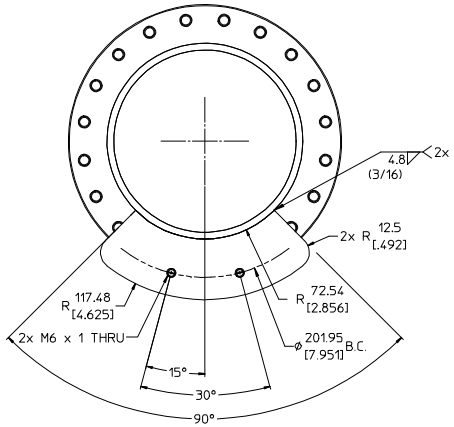

(ONE FLANGE REMOVED FOR CLARITY)

NOTES (UNLESS OTHERWISE SPECIFIED)

1. ALL DIMENSIONS ARE IN MILLIMETERS. (DIMENSION IN PARENTHESIS ARE IN INCHES).
2. ITEM 2 (FLANGE) TO HAVE 8.4mm THROUGH HOLES
3. ITEM 3 (FLANGE) TO HAVE M8 x 1.25 TAPPED HOLES
4. ALL WELD SYMBOLS PER ANSI/AWS/A2.4-1993.
5. WELDS PER ANSI/AWS/D1.1-1990.
6. ALL DIMENSIONS APPLY AFTER WELDING.
7. PROTECT CONFLAT FLANGE KNIFE EDGE AT ALL TIMES.
8. FINISHED ASSEMBLY TO BE VACUUM TIGHT. LEAK RATE LESS THAN 1 X 10^-9 STD. ATM.- CC PER SECOND HELIUM.
9. THIS IS A VACUUM WELDMENT. CLEAN ALL COMPONENTS PER LBNL SPECIFICATION M20013.
10. ALL HIDDEN LINES MAY NOT BE SHOWN.

REQD	ITEM	PART NO	DESCRIPTION
1	4	-	PLATE, 304L STAINLESS STEEL
1	3	-	FLANGE, Ø320mm (NB INCH 304L SS BLANK, M8 TAPPED HOLES
1	2	-	FLANGE, Ø320mm (NB INCH 304L SS BLANK, 8.4mm CLEARANCE HOLES
1	1	-	TUBE, Ø168mm (5.5" INCH O.D.) x Ø150mm (5.0" INCH I.D. 304L STAINLESS STEEL

REV	AUTHOR	APPROVER	DATE	CHANGE DESCRIPTION
A	initials			INITIAL REVISION

UNLESS OTHERWISE SPECIFIED
X.x = ±.XX = ±.38 .XXX = ±.127
FRACTIONS = ± 1/64
ANGLES = ± 0°15'/25mm
FINISH SURFS. = 1.6 µm
DO NOT SCALE DRAWING
REF DIMS (*) IN SQ. BRKTS. TOWARDS ARE CORR.
BREAK EDGES .016 MAX. ON MACHINED MEMB.
REMOVE BURRS. WELD SPLATTER & LARGE SCALE

PROJECT NAME: MICE

ERNEST ORLANDO LAWRENCE BERKELEY NATIONAL LABORATORY
UNIVERSITY OF CALIFORNIA

DRAWING NUMBER: MLL-0008-5474
DWG SIZE: A
MUON IONIZATION COOLING EXPT. (MICE)
MICE – RF & COUPLING COIL MODULE
SCALE: 1 : 1 | MU10208 SPOOL RF COUPLER VACUUM VESSEL FEED THRU, 1:1
THIRD ANGLE PROJECTION
SHEET 1 OF 1 | SIZE: 5 | DWG NO: 29H024 | REV: A