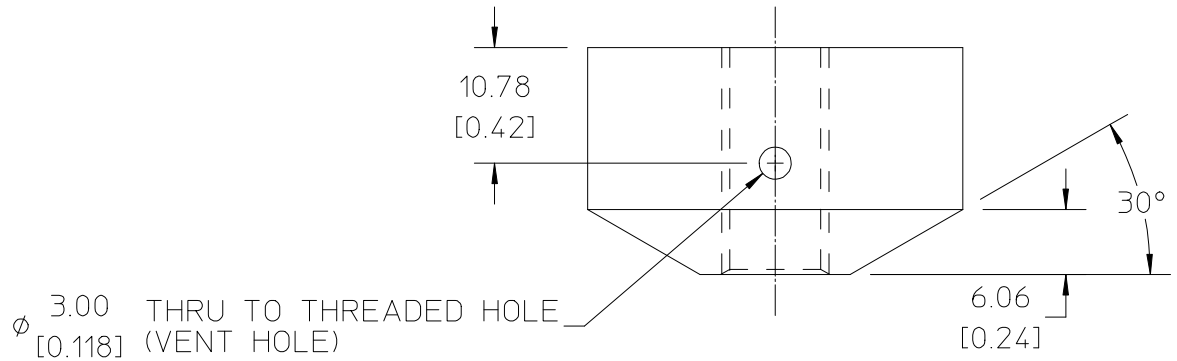

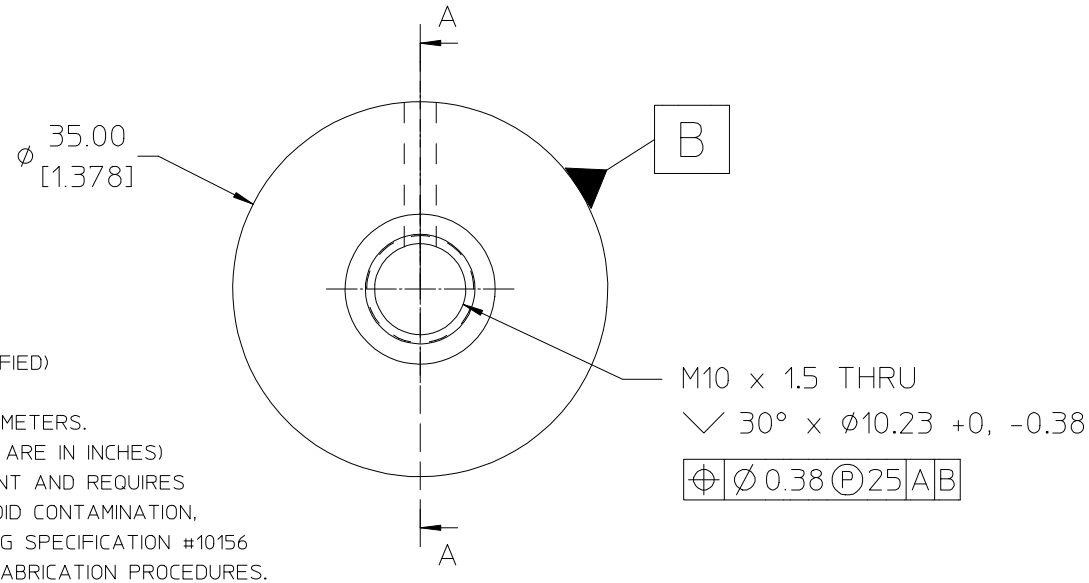

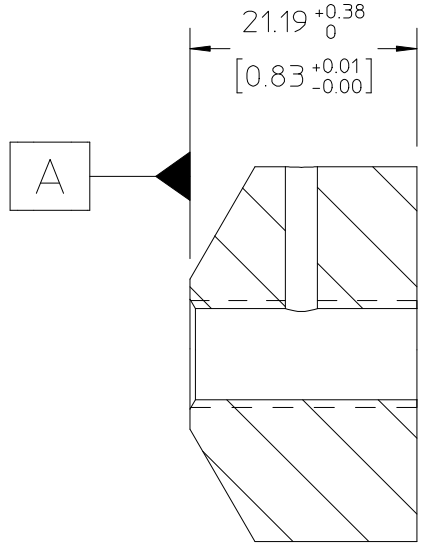

Section A-A

NOTES (UNLESS OTHERWISE SPECIFIED)

1. ALL DIMENSIONS ARE IN MILLIMETERS.
   (DIMENSION IN PARENTHESIS ARE IN INCHES)
2. THIS IS A VACUUM COMPONENT AND REQUIRES SPECIAL ATTENTION TO AVOID CONTAMINATION, REFER TO LBNL ENGINEERING SPECIFICATION #10156 BEFORE PERFORMING ANY FABRICATION PROCEDURES.
3. ALL HIDDEN LINES MAY NOT BE SHOWN.

REV	AUTHOR	APPROVER	DATE	CHANGE DESCRIPTION
A	lkistule			INITIAL REVISION

MAT 2: , NOTES:

MAT 1: , 304L STAINLESS STEEL NOTES:

UNLESS OTHERWISE SPECIFIED

TOLERANCES: .X± .- .XX± 38 .XXX± .--- ; FRACTIONS: ± -/-- ; ANGLES: ± 0.5°/25mm ; MACH. SURFS.: 1.6 OR BETTER

REF: ASME Y14.5M-1994, THREADS ARE CLASS 2
BREAK EDGES .016 MAX. ON MACHINED WORK
REMOVE BURRS, WELD SPLATTER & LOOSE SCALE

PROJECT NAME: MICE

UNIQUE NUMBER MU-0010-6118

DO NOT SCALE PRINT — SCALE: 2 : 1 — CATEGORY CODE: MU1020

THIRD ANGLE PROJECTION

ERNEST ORLANDO LAWRENCE BERKELEY NATIONAL LABORATORY
UNIVERSITY OF CALIFORNIA

MUON IONIZATION COOLING EXPT. (MICE)
MICE - RF & COUPLING COIL MODULE
VACUUM VESSEL STRUT MOUNT INNER CAVITY

SHEET 1 OF 1 — SIZE: B — DWG NO: 29H023 — REV A