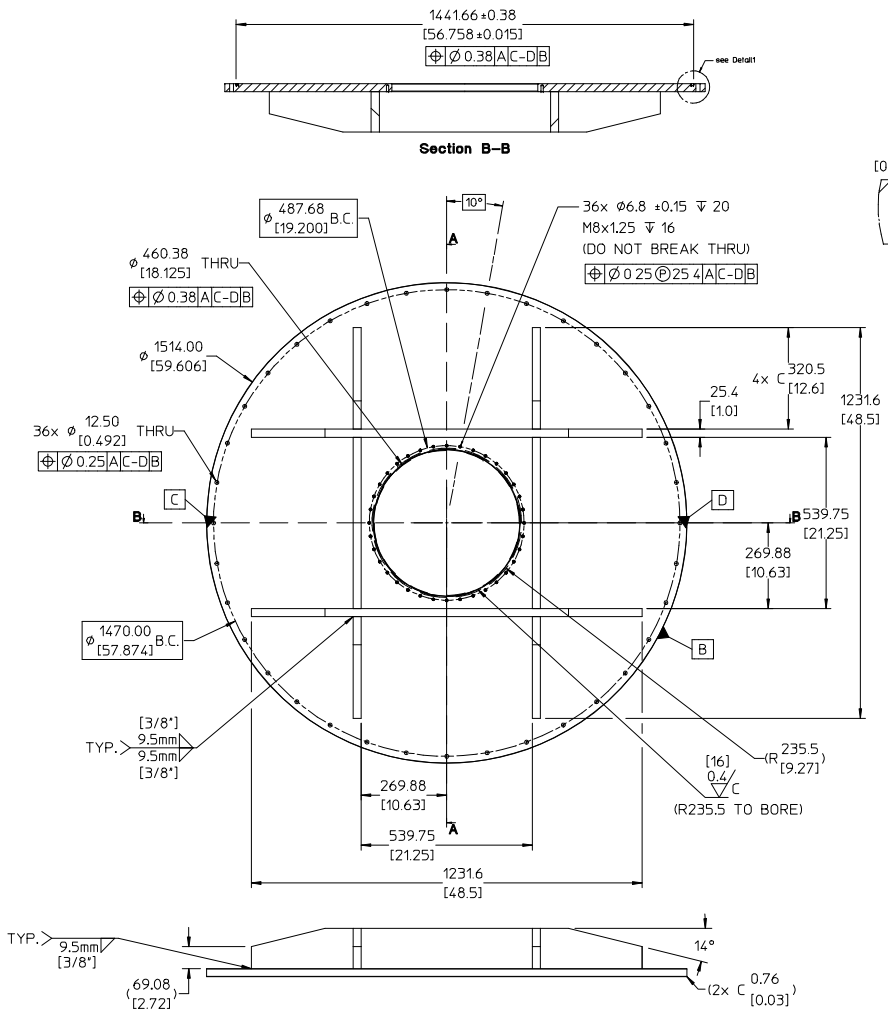

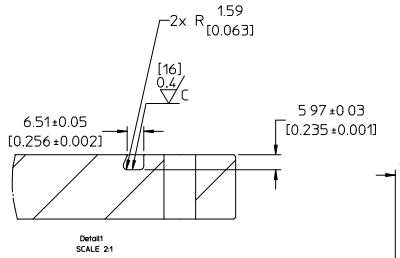

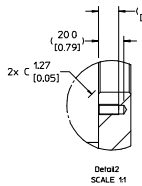

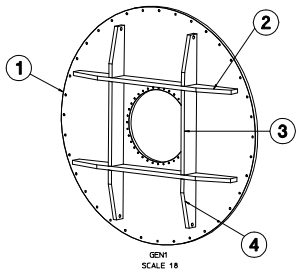

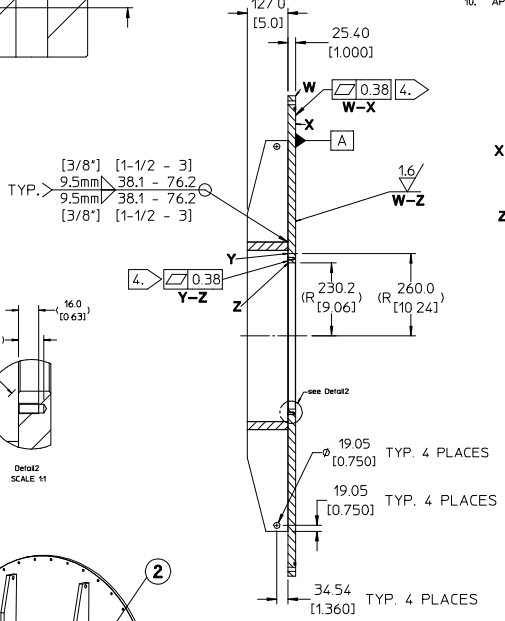

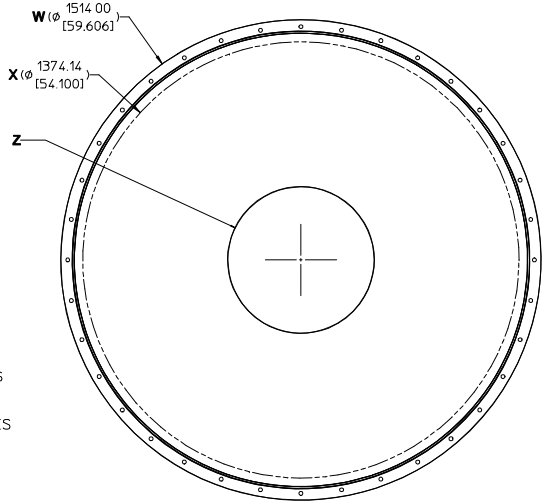

NOTES (UNLESS OTHERWISE SPECIFIED)

1. ALL DIMENSIONS ARE IN MILLIMETERS. (DIMENSION IN PARENTHESIS ARE IN INCHES)
2. ALL WELD SYMBOLS PER ANSI/AWS/A2.4-1993.
3. WELDS PER ANSI/AWS/D1.1-1990.
4. ALL DIMENSIONS APPLY AFTER WELDING.
5. REMOVE ALL BURRS AND BREAK ALL SHARP EDGES .03-.06" CHAMFER OR RADIUS.
6. REMOVE ALL SPLATTER, SLAG ETC. FROM WELD AREAS.
7. PROTECT FINISHED SEALING SURFACE FROM ALL DAMAGE. TAKE CARE NOT TO DING, SCRATCH, DENT, OR OTHERWISE MARK ANY MACHINED SURFACE.
8. THIS IS A VACUUM COMPONENT AND REQUIRES SPECIAL ATTENTION TO AVOID CONTAMINATION. REFER TO LBNL ENGINEERING SPECIFICATION #10156 BEFORE PERFORMING ANY FABRICATION PROCEDURES.
9. ALL HIDDEN LINES MAY NOT BE SHOWN.
10. APPROXIMATE WEIGHT: 980 lbs.

REV	AUTHOR	APPROVER	DATE	CHANGE DESCRIPTION
A	Niehle			INITIAL REVISION

REQD	ITEM	PART NO.	DESCRIPTION
4	4	-	304L PLATE, 25.4 (1 INCH) THK x 3293mm (129.6 INCH) LG, x 127.0mm (5.0 INCH) HT.
2	3	-	304L PLATE, 25.4 (1 INCH) THK x 1397mm (55.0 INCH) LG, x 127.0mm (5.0 INCH) HT.
2	2	-	304L PLATE, 25.4 (1 INCH) THK x 1219.4mm (48.0 INCH) LG, x 127.0mm (5.0 INCH) HT.
1	1	-	304L PLATE, 25.4 (1 INCH) THK x 1470.0mm (58.0INCH) INCH

UNLESS OTHERWISE SPECIFIED: DIMENSIONS ARE IN MILLIMETERS; FRACTIONS: ± 1/64"; ANGLES: ± 1.0°/25mm; DECIMAL (INCH): ± 0.4/.25mm; DO NOT SCALE THIS DRAWING; DRAWN DIMENSIONS ONLY; DRAWN BORDER, BOLD LEADER & LARGE BORDER DIMENSIONS

DRAWN BY: NIECE

ERNEST ORLANDO LAWRENCE BERKELEY NATIONAL LABORATORY
UNIVERSITY OF CALIFORNIA

UNIQUE IDENTIFICATION: AL-0092-6820

MUON IONIZATION COOLING EXPT (MICE)
MICE — RF & COUPLING COIL MODULE
151MM DIAMETER FLANGED COVER PLATE ASSY 2

SCALE: 1 : 4 | MU102C | THIRD ANGLE PROJECTION | SHEET 1 OF 1 | SIZE: 5 | DWG NO 29B914 | REV A