NOTES (UNLESS OTHERWISE SPECIFIED)

1. ALL DIMENSIONS ARE IN MILLIMETERS.
   (DIMENSION IN PARENTHESIS ARE IN INCHES)
2. PROTECT CONFLAT FLANGE KNIFE EDGE AT ALL TIMES.
3. THIS IS A HIGH VACUUM COMPONENT AND REQUIRES SPECIAL ATTENTION TO AVOID CONTAMINATION, REFER TO LBNL ENGINEERING SPECIFICATION #10156 BEFORE PERFORMING ANY FABRICATION PROCEDURES.
4. ALL HIDDEN LINES MAY NOT BE SHOWN.

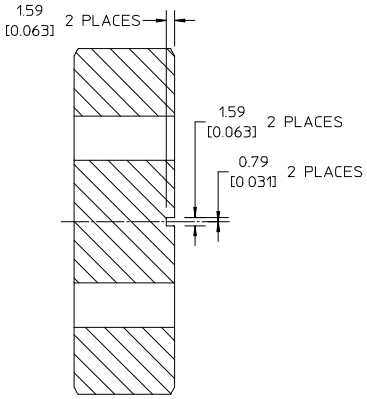

Section C–C

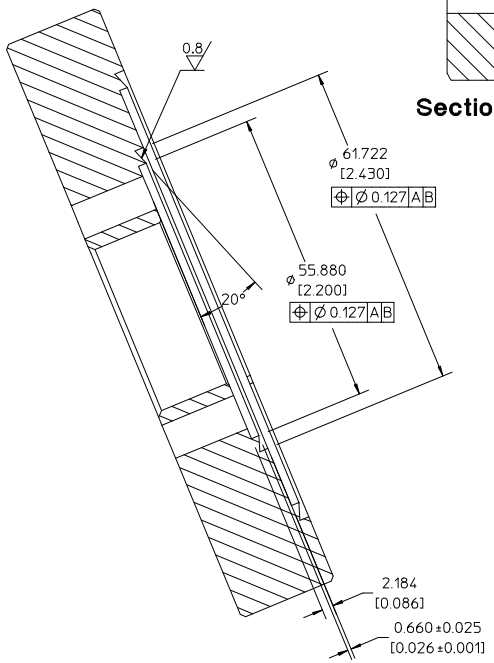

Section B–B

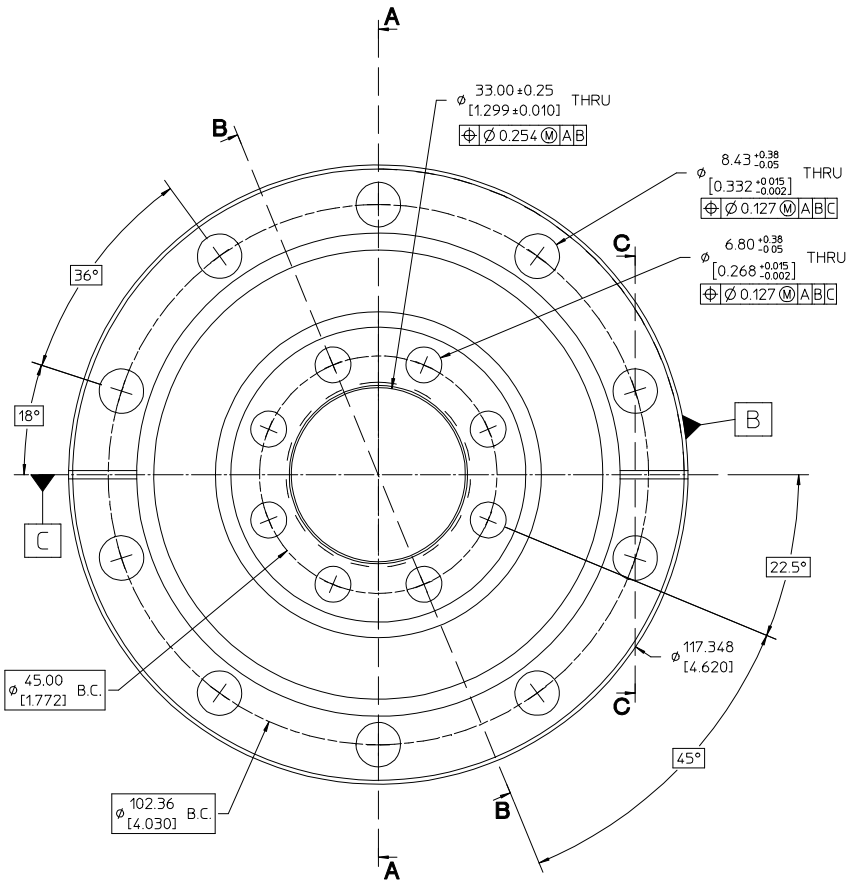

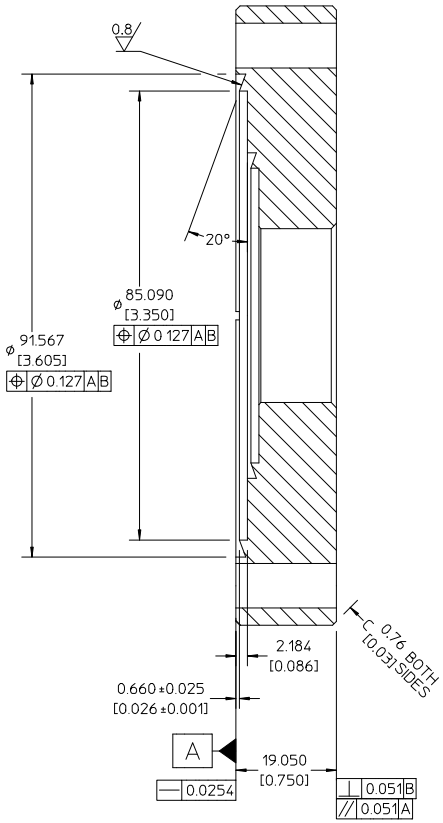

Section A–A

REV	AUTHOR	APPROVER	DATE	CHANGE DESCRIPTION
B	ajdemell	ajdemell	7/1/13	MOVE Ø6.80 HOLES ONTO Ø45.00 BOLT CIRCLE
A	ajdemell	ajdemell	3/15/11	INITIAL REVISION

UNLESS OTHERWISE SPECIFIED
TOLERANCES: .X± = .XX±.38 XXX±.127; FRACTIONS: ± -/--; ANGLES: ± 0.5°/25mm; MACH. SURFS.: 1.6 OR BETTER
REF ASME Y14.5M-1994, THREADS ARE CLASS 2
BREAK EDGES .016 MAX. ON MACHINED WORK
REMOVE BURRS, WELD SPLATTER & LOOSE SCALE

MAT 2 . NOTES
MAT 1 . STAINLESS STEEL 304L NOTES

PROJECT NAME: MICE
UNIQUE NUMBER: MU-0006-6185
DO NOT SCALE PRINT
SCALE 2 1
CATEGORY CODE: MU1020
THIRD ANGLE PROJECTION

ERNEST ORLANDO LAWRENCE BERKELEY NATIONAL LABORATORY
UNIVERSITY OF CALIFORNIA

MUON IONIZATION COOLING EXPT. (MICE)
MICE - RF & COUPLING COIL MODULE
WATER FEEDTHRU, EXTERNAL FLANGE

SHEET 1 OF 1 SIZE D DWG NO: 26L290 REV B