NOTES (UNLESS OTHERWISE SPECIFIED)

1. ALL DIMENSIONS ARE IN MILLIMETERS.
   (DIMENSION IN PARENTHESIS ARE IN INCHES)
2. PROTECT CONFLAT FLANGE KNIFE EDGE AT ALL TIMES.
3. THIS IS A HIGH VACUUM COMPONENT AND REQUIRES SPECIAL ATTENTION TO AVOID CONTAMINATION, REFER TO LBNL ENGINEERING SPECIFICATION #10156 BEFORE PERFORMING ANY FABRICATION PROCEDURES.
4. ALL HIDDEN LINES MAY NOT BE SHOWN.

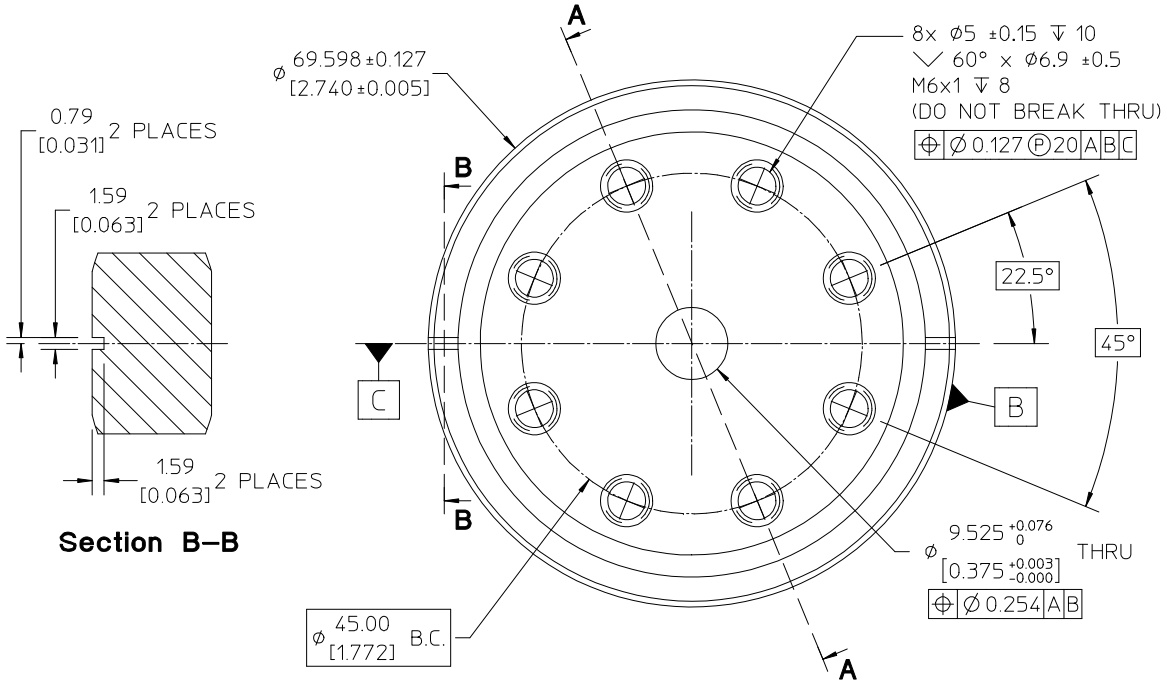

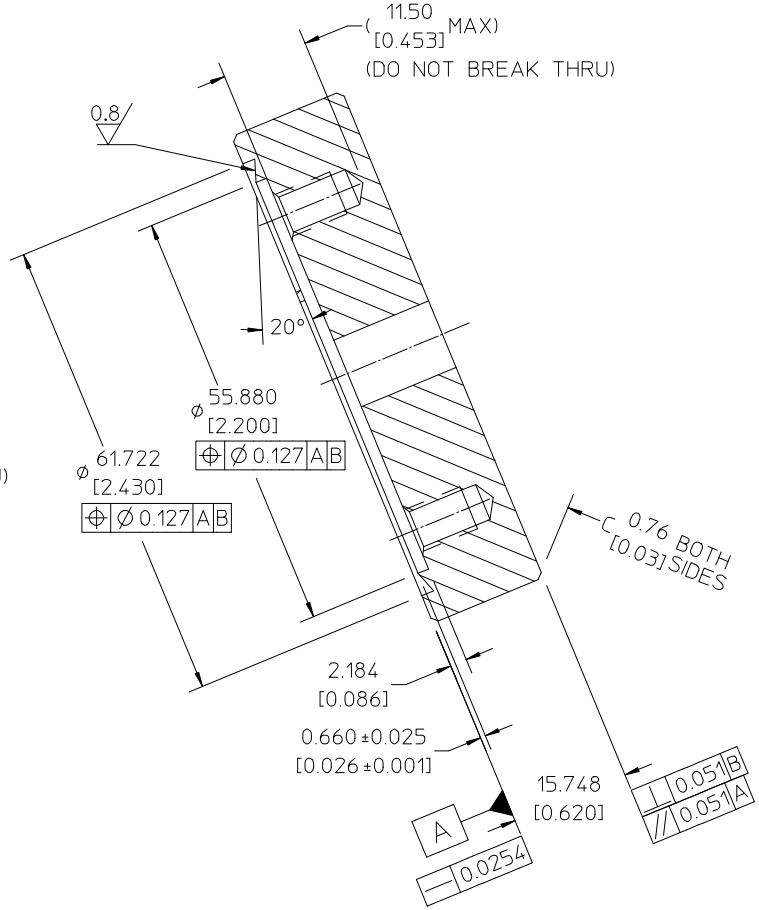

REV	AUTHOR	APPROVER	DATE	CHANGE DESCRIPTION
B	ajdemell	ajdemell	7/1/13	CHANGE Ø44.30 B.C. TO Ø45.00 B.C.
A	ajdemell	ajdemell	3/15/11	INITIAL REVISION

UNLESS OTHERWISE SPECIFIED
TOLERANCES: X± .- .XX± .38 .XXX± .127; FRACTIONS: ± -/--; ANGLES ± 0.5°/25mm; MACH. SURFS.: 1.6 ✓ OR BETTER
REF: ASME Y14.5M-1994, THREADS ARE CLASS 2
BREAK EDGES .016 MAX. ON MACHINED WORK
REMOVE BURRS, WELD SPLATTER & LOOSE SCALE

MAT 2: , NOTES:
MAT 1: , STAINLESS STEEL 304L NOTES:

PROJECT NAME: MICE
UNIQUE NUMBER: MU-0006-6276
DO NOT SCALE PRINT
SCALE: 2 : 1
CATEGORY CODE: MU1020
THIRD ANGLE PROJECTION

ERNEST ORLANDO LAWRENCE BERKELEY NATIONAL LABORATORY
UNIVERSITY OF CALIFORNIA

MUON IONIZATION COOLING EXPT. (MICE)
MICE - RF & COUPLING COIL MODULE
WATER FEEDTHRU, INTERNAL FLANGE

SHEET 1 OF 1 | SIZE: C | DWG NO: 26L289 | REV B