Fermilab

Managed by Fermi Research Alliance, LLC for the U.S. Department of Energy Office of Science

CRR Review of Hayman2 Target for Mu2e

Dave Pushka

Mu2e Target Construction Readiness Review

15 January 2020

Charge, Context / Background:

- The charge has been provided by Julie; 8 questions to address.
- The design presented in this review represents the conclusion of the project funded design effort.
  - Future development work will be performed on operations money.
  - While the target presented likely has room for improvements, this design will be used to meet the project key performance parameters (KPP's).
- Context / Background:
  - Mu2e project is under significant financial constraints.
  - Target Station is significantly over budget.
  - This target will be the first used and likely will not see full design intensity as it will take some time to tune the extraction.

Target Requirements

- 8 GeV Protons from Delivery Ring
- Eight 43 msec long spills during 380 ms. Then, 1020 msec of no beam.
- Operate for 1 year (2×10^7 seconds ~ 5555 hrs ~ 33 weeks)
- Goal is to make pions which decay to muons, and the muons transported to and absorbed in a stopping target.
- Goal is a target lifetime > 1 year of operation.

- Beam Power is 7.3 kW for the design intensity running
  - Used in the analysis presented here.
- A reduced intensity of 3.8 kW will be the running mode for the first 2-3 years of operation.

Target Requirements

- A target change not during a scheduled shutdown effectively reduces the muon rate:
  - Duration ~ 4 weeks (working assumed duration)
  - Each change is a 12 % reduction in muons over the year of running ($4/33 \approx 0.12$)

- Operating Cost to Replace a target is on the order of $100,000 (perhaps more, unlikely to be significantly less).

Target Position Requirements

- Target Position Requirements in Mu2e docdb 887 by James Popp, Rick Coleman and Kevin Lynch.
- Transverse:
  - Overall alignment of the target rod with respect to the beam transversely (i.e. x-y where the beam is along z) needs to be less than about 0.5 mm to avoid losing more than a few percent of the muon yield [4].
- Longitudinal:
  - Muon yield is significantly less sensitive to target position along the muon channel (z), locating the target within +/-1 cm is sufficient

Requirements and Design Goals:

- Maximize the stopped muons in the stopping target.
  - Estimated by Simulations in G4 beamline and the Framework
  - Material around the target absorbs pions and reduces the muons in the stopping target.

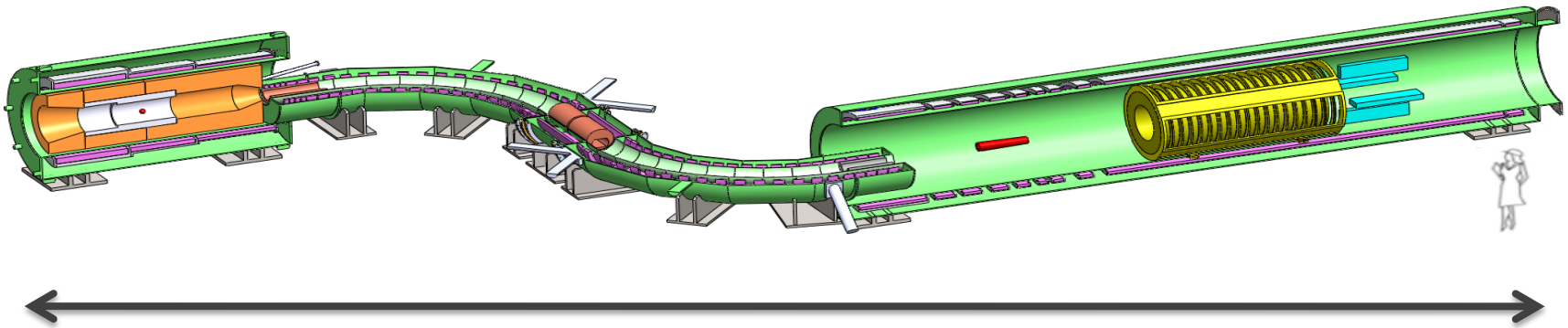

about 75 feet end-to-end

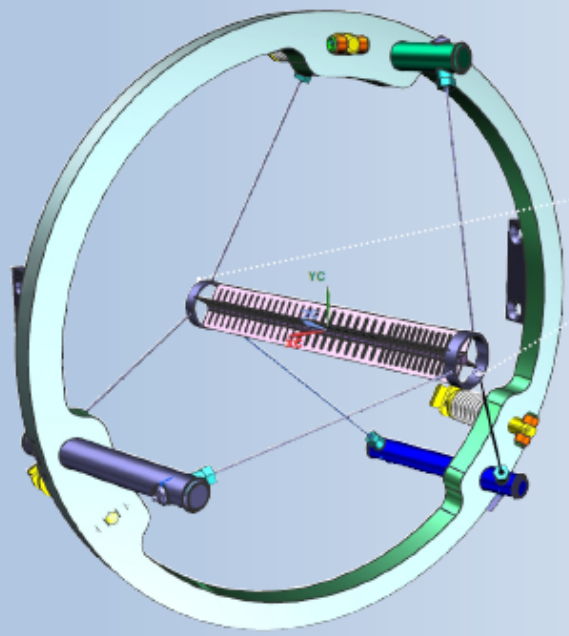

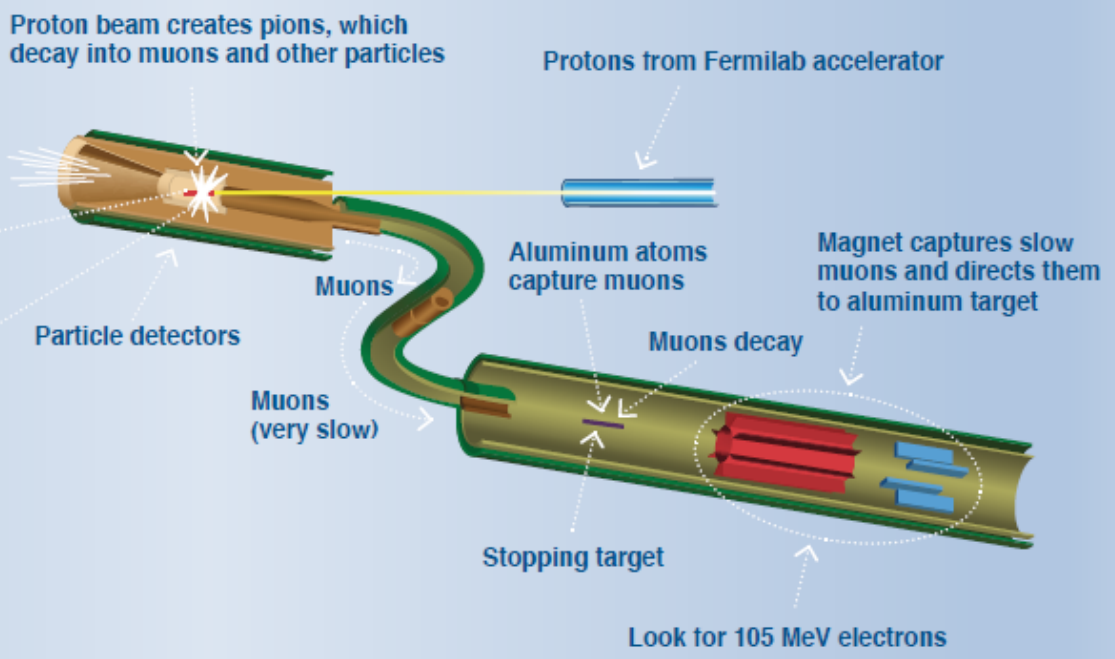

Production Target

The Mu2e production target is suspended by spokes within a bicycle wheel structure. The current version of the tungsten production target has circular rings at the ends and its core is finned and segmented to allow for sag minimization and temperature control.

Plans for a Muon Conversion Experiment

The proposed Mu2e experiment will test a fundamental symmetry of the quantum world. Scientists have observed the transformation of one type of quark into another, as well as the transition of one type of neutrino into another. The question remains: Can the muon, a charged lepton, change into another type of charged lepton? In particular, can a muon turn into an electron? The discovery of this process would revolutionize scientists' understanding of elementary particles and the principles that govern their interactions.

Meeting Target Position Requirements

- Transverse: 0.5 mm
- Longitudinal: within +/-1 cm is sufficient
- This effectively Sets requirements on the spoke angles.
  - To maximize the transverse rigidity, spokes should be *perpendicular* to the target long (z) axis.
  - To maximize longitudinal rigidity, spokes should be *parallel* to the target long (z) axis.
- Spokes at 70 degrees to the target long axis (20 degrees to perpendicular) is a compromise that meets both requirements.

Target Pion Production Performance

- Bob Bernstein (Fermilab) and Kevin Lynch (CUNY, York College) have both calculated the stopped muon production.
  - Bob has used the Framework (I think this is a full Geant simulation).
  - Kevin has used G4 beamline (an optimized form of Geant which includes some cuts to accelerate performance)
- From Kevin Lynch in mu2e docdb 26811 page 8 Summary of Yield Calculations:
  - TDR: 0.0019 mu/POT (optimistic no supports)
  - TDR Target: 0.0016
  - Tier 1: 0.00156
  - Hayman 2: 0.00151
- Bob has provided Edep output for Hayman2 in docdb 30629 and muon yield numbers in docdb 30111.
  - Hayman 2: 0.001463 +/- 10 stopped muons per POT

Target Pion Production Performance

- Results for this design are in the range of 0.001463 (Bob) to 0.001510 (Kevin) stopped muons per POT.
- Using 0.0016 for the TDR target value based on realistic assumptions, this target design is 91% to 94% of the TDR value.
  - 5.6 % lower using Kevin's stopped muons per POT
  - 8.7 % lower using Bob's stopped muons per POT
  - 0.0015/ 0.0019 = 79% of theoretical (bare rod) version.

- The mechanical integrity improvements cost us less than 6-9% in muon yield. The experiment spokesmen had given us 20% to accomplish this.
- Success.

Target Failure Modes (not in chronological order as identified by RAL):

- Melting, Tungsten melting temperature ~ 3500 K
- But, long before it melts, it softens and low mechanical stresses result in plastic deformations.
  - think of a stick of butter on a warm summer day.
  - Usually called Creep which is a function of Temperature, Stress, and Time. Strain, ϵ, Described by Norton Creep Law:
    - Stress to the 0.9 power
    - Time to the 0.3 power

$$\varepsilon = B \exp\left(-\frac{Q}{RT}\right)\sigma^n t^m$$

    - Constant B = 0.4, Q = 122 kJ/mol for 1% La_2O_3 doped W.
    - Conclude: Support target to minimize mechanical stress.
- Thermal Stresses.
  - Parts that heat up are constrained by those that heat up less, resulting in thermal stresses.

Target Failure Modes Continued, Oxidation:

Oxidation driven by residual Oxygen and Water Vapor in the vacuum.

- Depends on the concentrations of O2 and H2O and on the temperature. Negligible if the temperature is sufficiently low.
- Oxygen Cycle:

$$W_{(s)} + O_{2\,(g)} \rightarrow WO_{2\,(g)}$$

$$2W_{(s)} + 3O_{2\,(g)} \rightarrow 2WO_{3\,(g)}$$

- Water Catalyst:

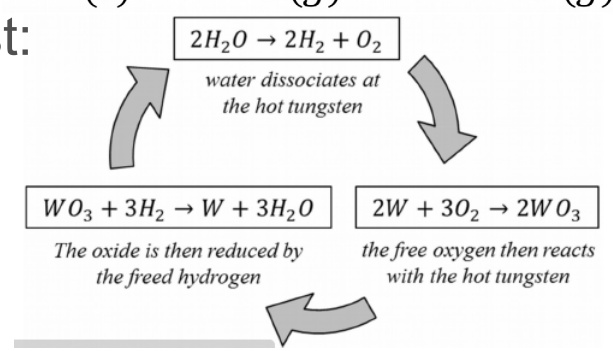

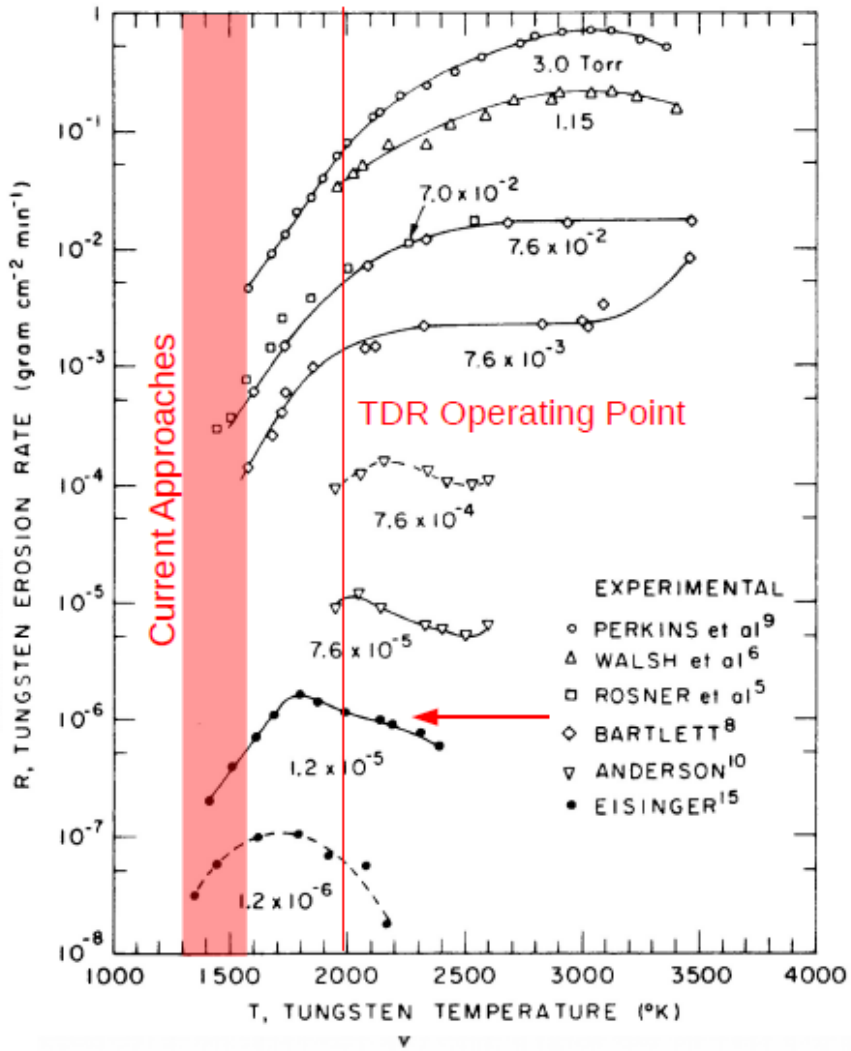

Target Failure Modes Continued, Oxidation:

The two photographs show before and after oxidation tests performed by RAL with an air leak to a vacuum.

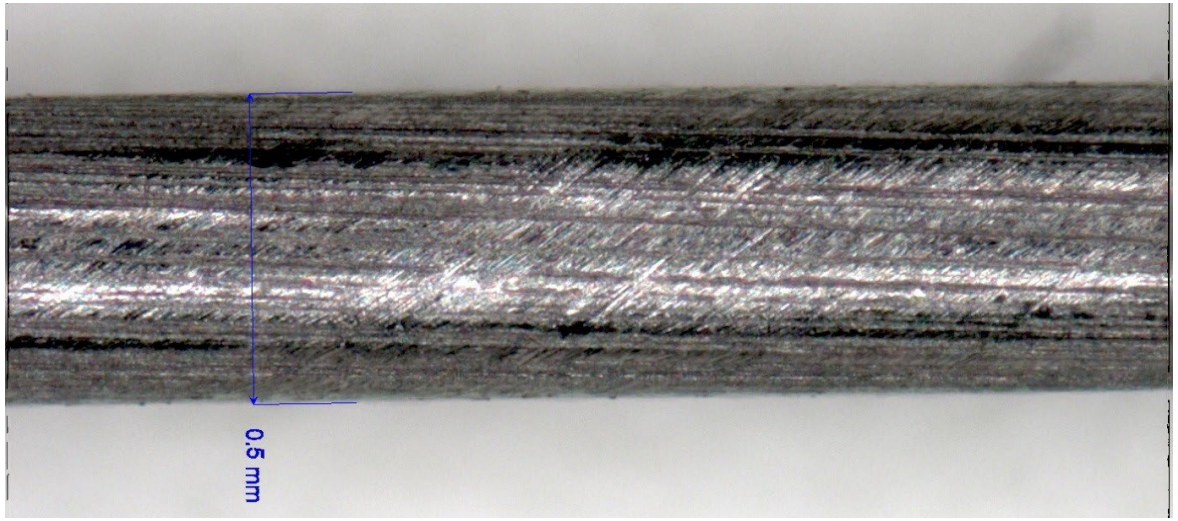

Better Vacuum lowers residual Oxygen and water vapor, reducing the material loss.

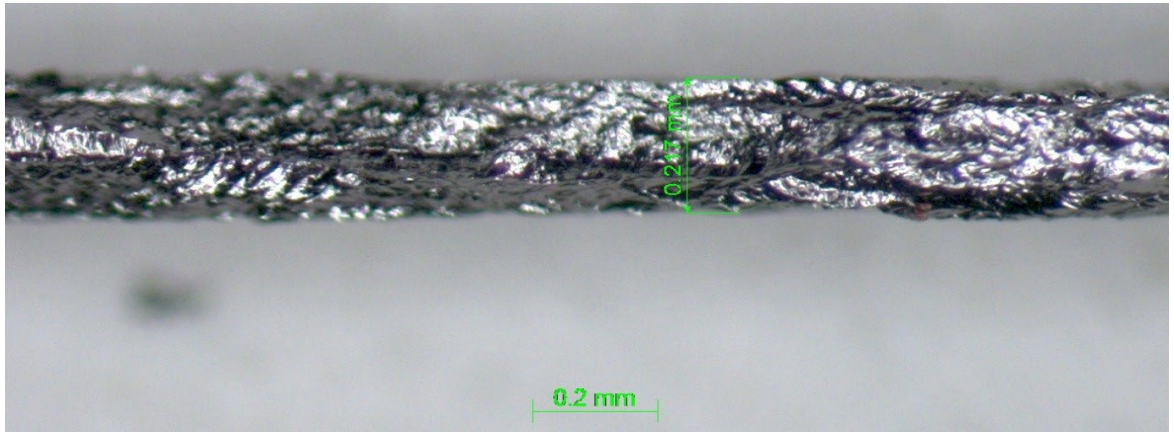

Vacuum Calculations indicate 1×10^{-5} torr around target.

Better vacuum limited by conductance of high vacuum line.

Difficult to Quantify Failure Modes: Recrystallization & Radiation Damage.

- Recrystallization:
  - Deformed grains in the material are replaced by defect free grains.
  - Usually results in loss of strength & reduced hardness.
  - Ductility usually increases
  - For tungsten, starts around 1300 C, 1% La_2O_3 doped W raises this to about 1500 C.
  - Conventional wisdom is to avoid recrystallizing after cold work option if possible.
- Radiation Damage:
  - Very large DPA (Displacement Per Atom).
  - Production of Hydrogen and Helium within the Tungsten Material.
  - Flying blindly into this with no way to test prior to operation

Other Constraints:

- Remote Handling System Design Very Mature.
  - Started in 2014, Design effort completed. Built, some testing completed. NO opportunity to change significantly.
- Extinction Monitor looks at core of the target for out of time protons hitting the target (which if not identified would mimic the out of time signal the experiment is looking for).
  - Extinction Monitor needs minimally obstructed view.
- Heat and Radiations Shield (HRS) is in fabrication.
  - Target and bicycle ring mount in the HRS
- All Edep used in the target ANSYS has come from G4 beamline simulations by Kevin Lynch CUNY- York College.
  - Some results from the Framework Model by Bob Bernstein (FNAL)

Charge Questions 4 & 6

Extinction Monitor View of the Target:

Images below come from the solid model (F10002515, a.k.a the integration model in Teamcenter) and represent the view of the target from the perspective of the extinction monitor.

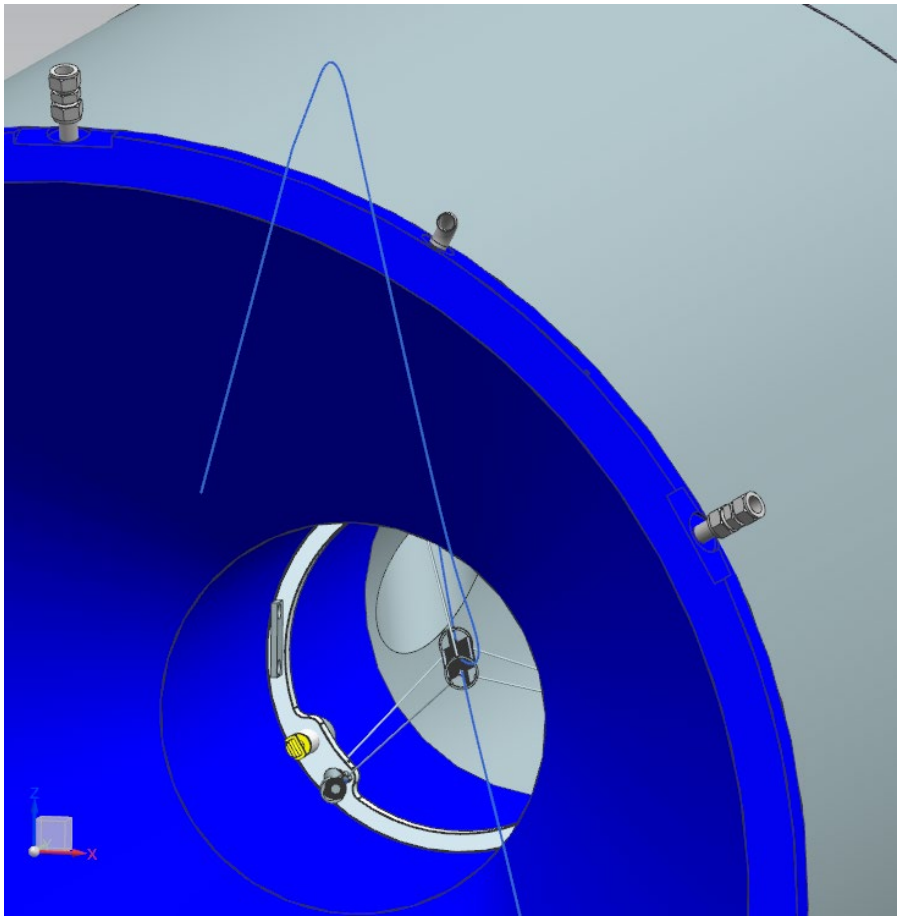

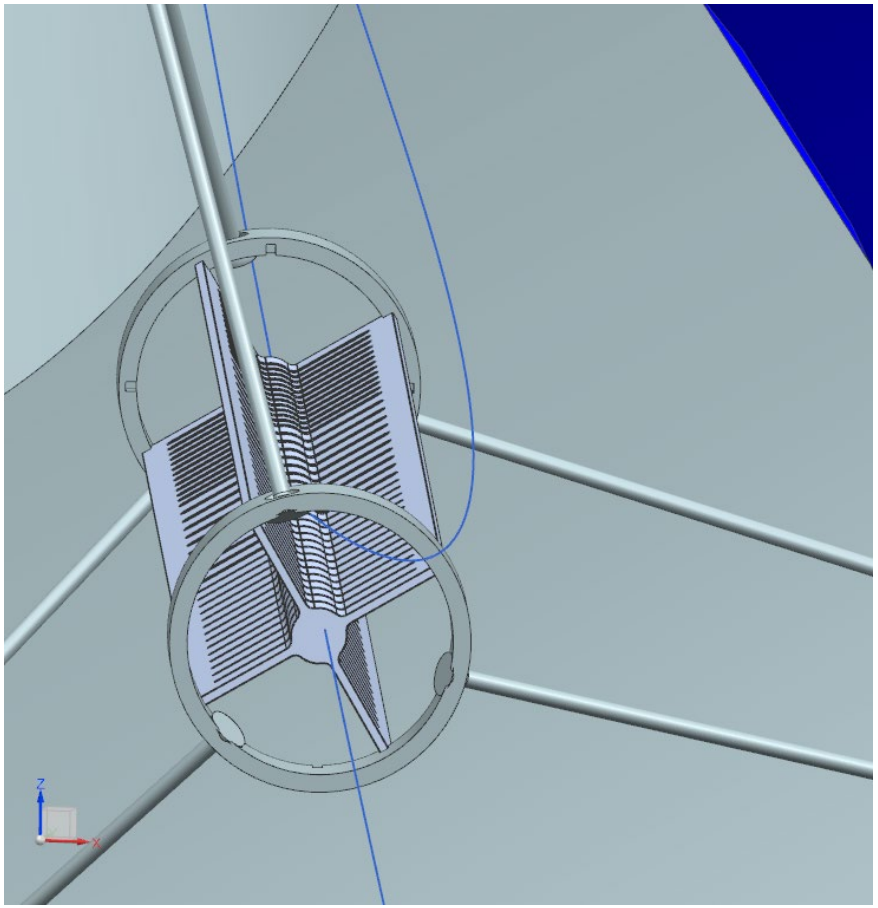

Design Goals to Thwart Identified Failure Modes:

- Reducing the temperature of the target solves some of the problems:
  - Oxidation
  - Creep
  - Recrystallization
- Temperature does not necessarily affect the radiation damage or the production of hydrogen and helium, but it may allow better diffusion of gaseous isotopes out of the metal.
  - Extent of the impact is not well understood.
- Thermal Stress can be reduced by separating the core elements and giving the hot part room to expand:

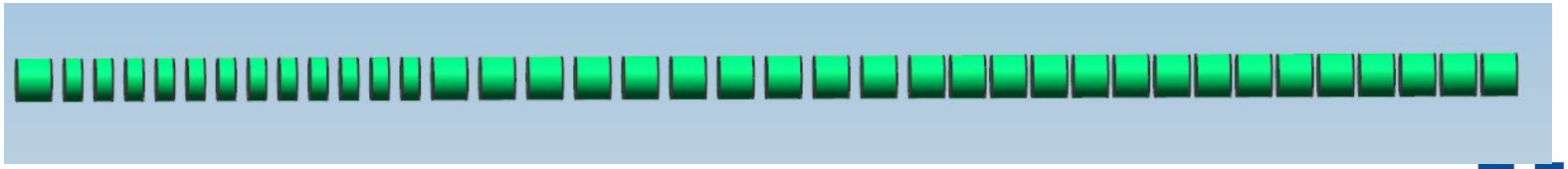

Start with the Governing Thermal Equation:

$$P = \sigma \times \varepsilon \times A \times (T^4 - T_b{}^4)$$

- P = Energy Deposition from the Protons in the Target
- σ = Stefan-Boltzmann **constant** (5.67x 10^{-8} W/m2* K)
- ϵ = emissivity (temperature dependent)
- A = surface area of the target
- T = temperature of the target
- T_b = temperature of the surroundings (about 305 K , 90 F)
- Absorber Power (P) is between 600 and 700 Watts.

- Conclusion, only two parameters can be adjusted to change the target temperature with constant power input, ϵ & A.

Ground We have Covered:

Various FNAL/ RAL iterations with fins (n_{fins} = 3 to 18) to augment cooling with increased surface area during 2018. Includes the T1 Milestone target (CRR in April 2018) (rightmost blue target)

Starting in 2018 Analysis included emissivity as a function of temperature, non-uniform time dependent Energy Deposition (Edep) (380 msec of Edep, 1.02 sec of no heating).

Original Rod for TDR/ CDR circa 2011 to 2014

1st cone iteration by FNAL circa 2014

RAL cone version circa 2014 to 2017

Various RAL design iterations with cantilevers to reduce stress and small fins circa 2018 Analysis by Ingrid

Strawman (a.k.a Ugly), Strawman 2 with core segmentation and much larger fin areas circa June 2018

Hayman 1 iterations with segmentation, shorter OAL, end support Rings Circa 2018-19

Hayman2, presented in this review started July 2019

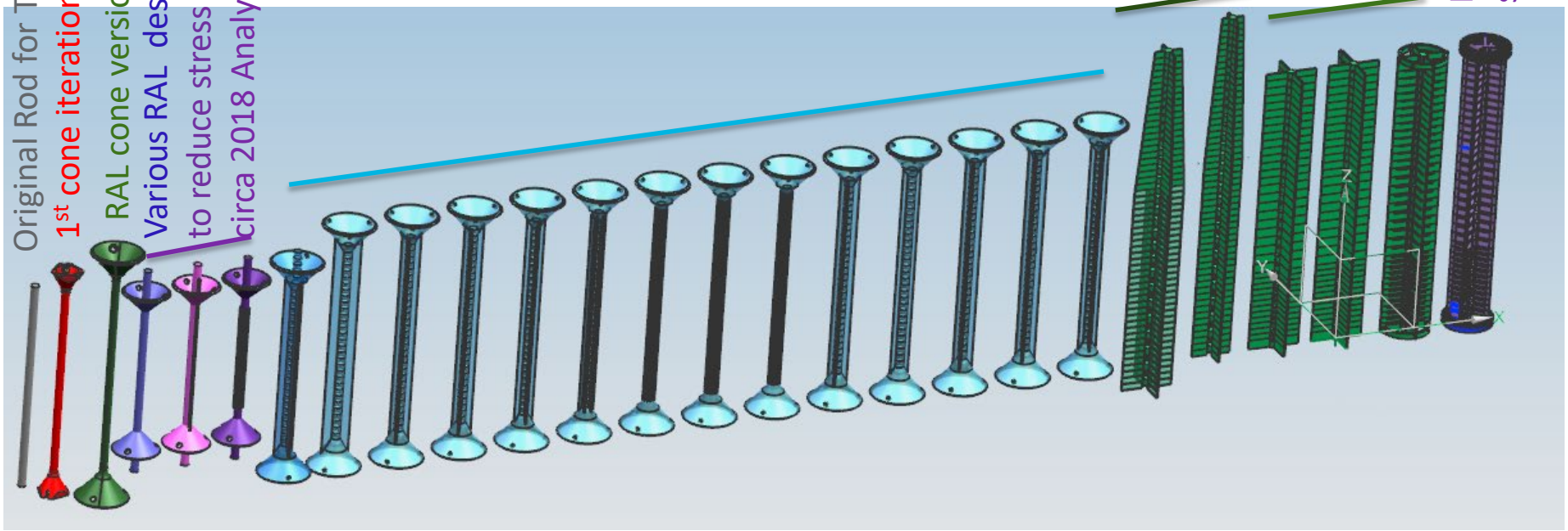

So, What is left to change to reduce the temperature?

- The area term by adding fins to increase the area:
  - The Strawman 1
    - Peak at 1000 C
  - The Strawman 3
    - Peak at 1000 C
  - Hangman
    - Peak at 1400 C
  - Hayman 1
    - Peak at 1120 C

Hayman2…..

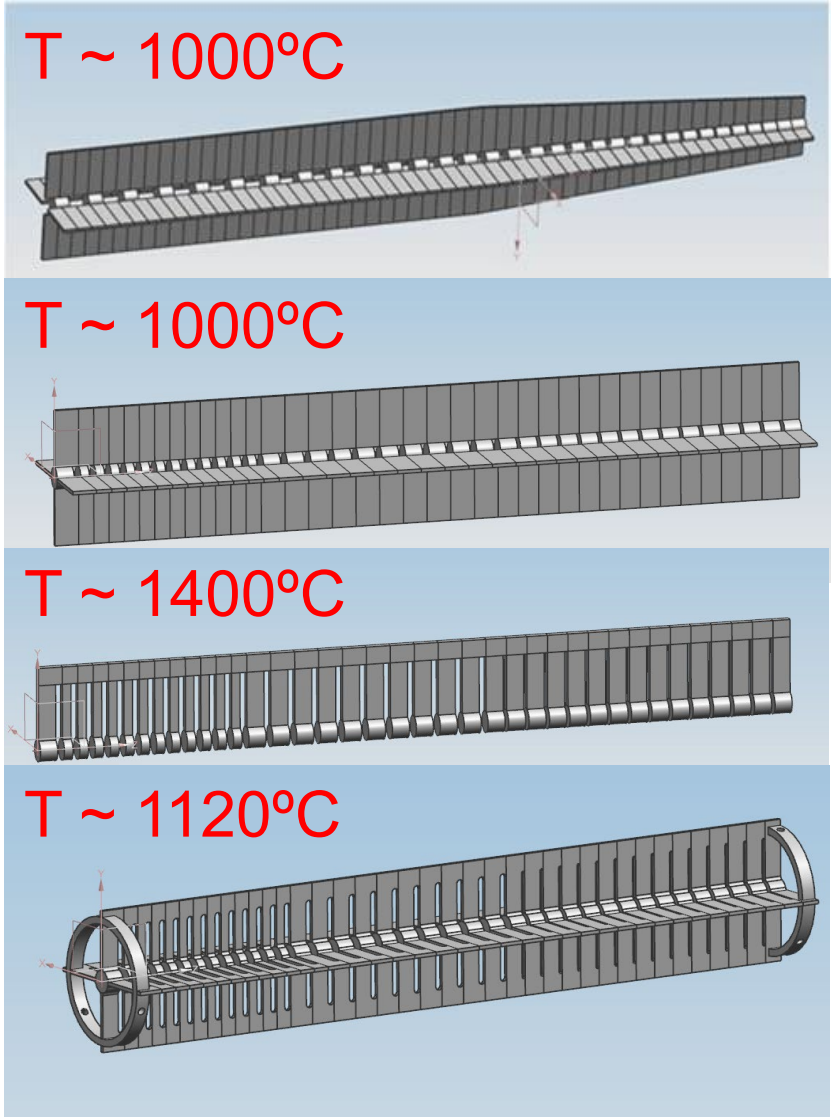

Ingrid’s Thermal Results for Hayman2

Thermal Results Summary:

Charge Question 1

Erosion Rate of about 1 x 10^{-7} g/cm^2/min

Time = 2 x 10^7 seconds = 3.34 x 10^5 min

Erosion Rate of 3.34 x 10^{-2} g/cm^2 per year

Density = 19.3 g/cm^3

Material loss = 1.73 x 10^{-3} cm / year

Material loss = 1.73 x 10^{-2} mm / year

Conclusions:

- Material Loss Failure Mode Not Likely to Limit the target lifetime.
- Will avoid Recrystallization since temperature is less than 1500 C.

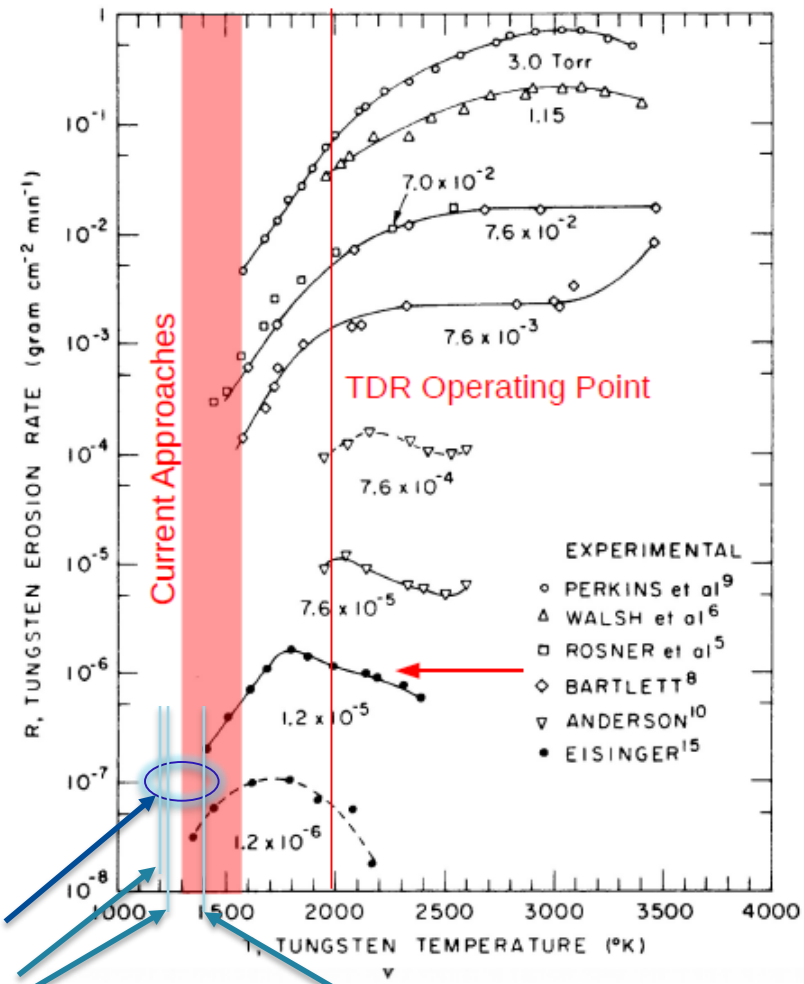

Hayman2 Operating Range

Spoke Peak 945 C = 1218 K

Ring Peak 967 C = 1240 K

Core & Fin Peak 1130 C = 1403

Target and Target Support Design Plays Nicely with the Remote Handling

View from the EOAT:

Things to note:

- Fins not exactly on the 45 degree angle, but do minimize the fin view from the extinction monitor.
- Only minor change to the bicycle ring from the test unit used for remote handling is the additional material at the 3 anchor points.
- Spokes at both ends are at the same angle. No + / - 12 degree offset at each end.
  - 15 degrees from 12, 4 and 8 o'clock positions

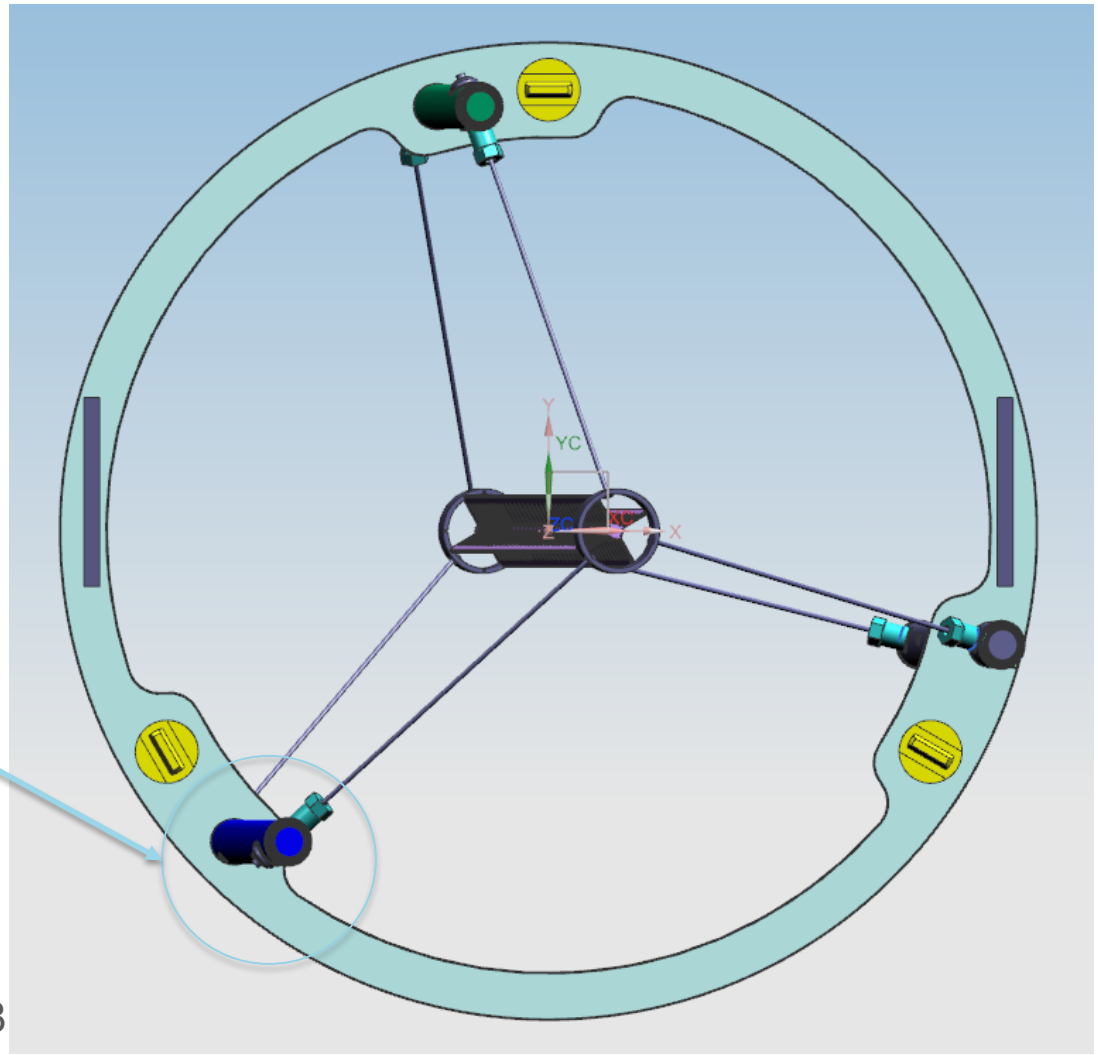

Hayman2 mounted in the EOAT

Charge Question 6

- View as seen from the TSu.
- Pink Ring represents the HRS inner shell.
- Yellow represents the EOAT removable tooling
- White and Gray parts are the target, spokes, bicycle ring, and spoke tensioning hardware.
- No interferences with the EOAT.
  - Only one area close with 0.019 clearance.
- No interferences with the HRS.

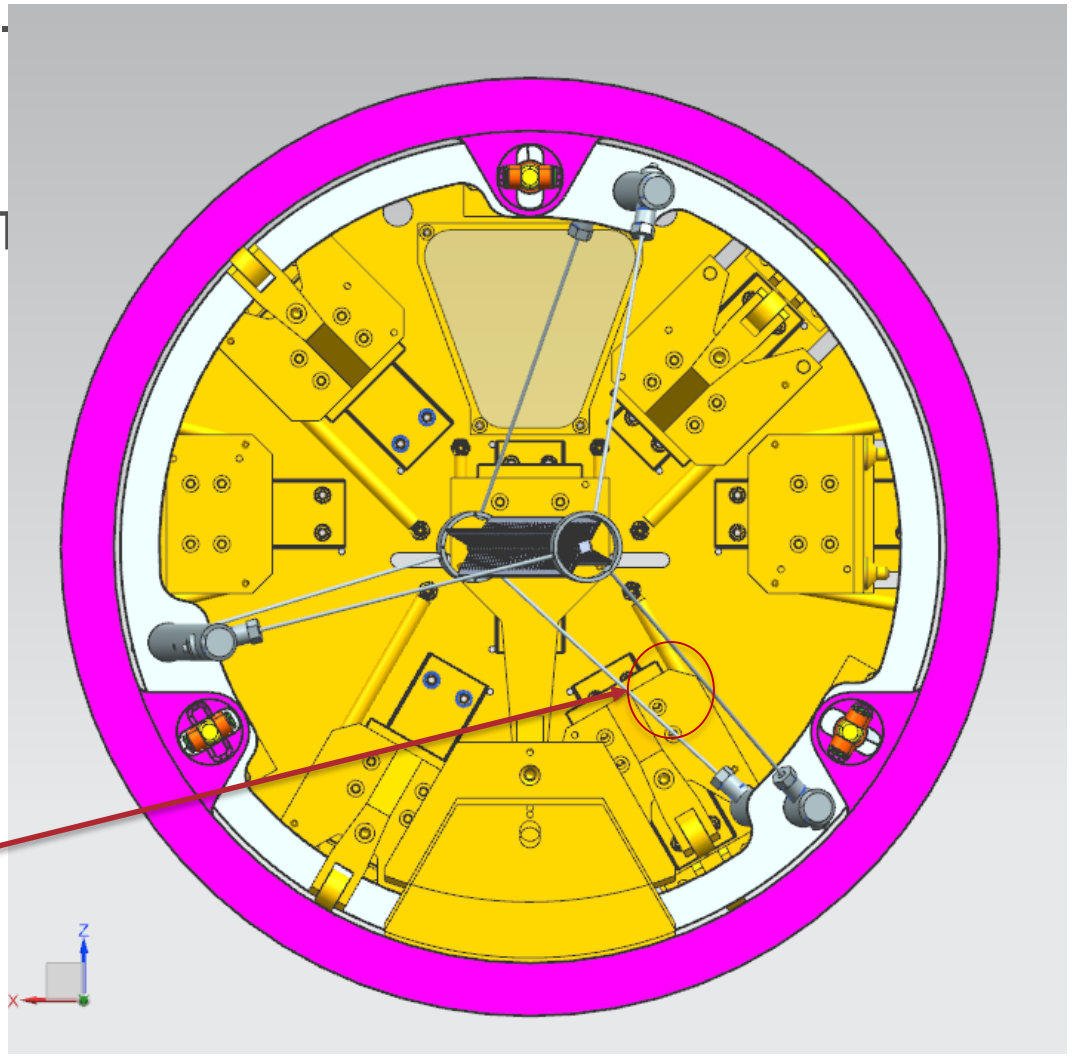

Cross Section thru one of the 3 support posts:

Support Post is stainless steel, 303. (BLUE)

Spoke is 1% La_2O_3 Tungsten

Adjustment nut is 6061-T6 Aluminum or SS as was used in Ingrid's FEA (Green)

Spoke keeper parts are 303 stainless steel for machinability.

Spring is 302 stainless steel.

Ring can be 6061 T-6 Aluminum or SS as was used in Ingrid's FEA (Green)

Roll pin used to lock Support post to the bicycle ring.

Details shown on next page

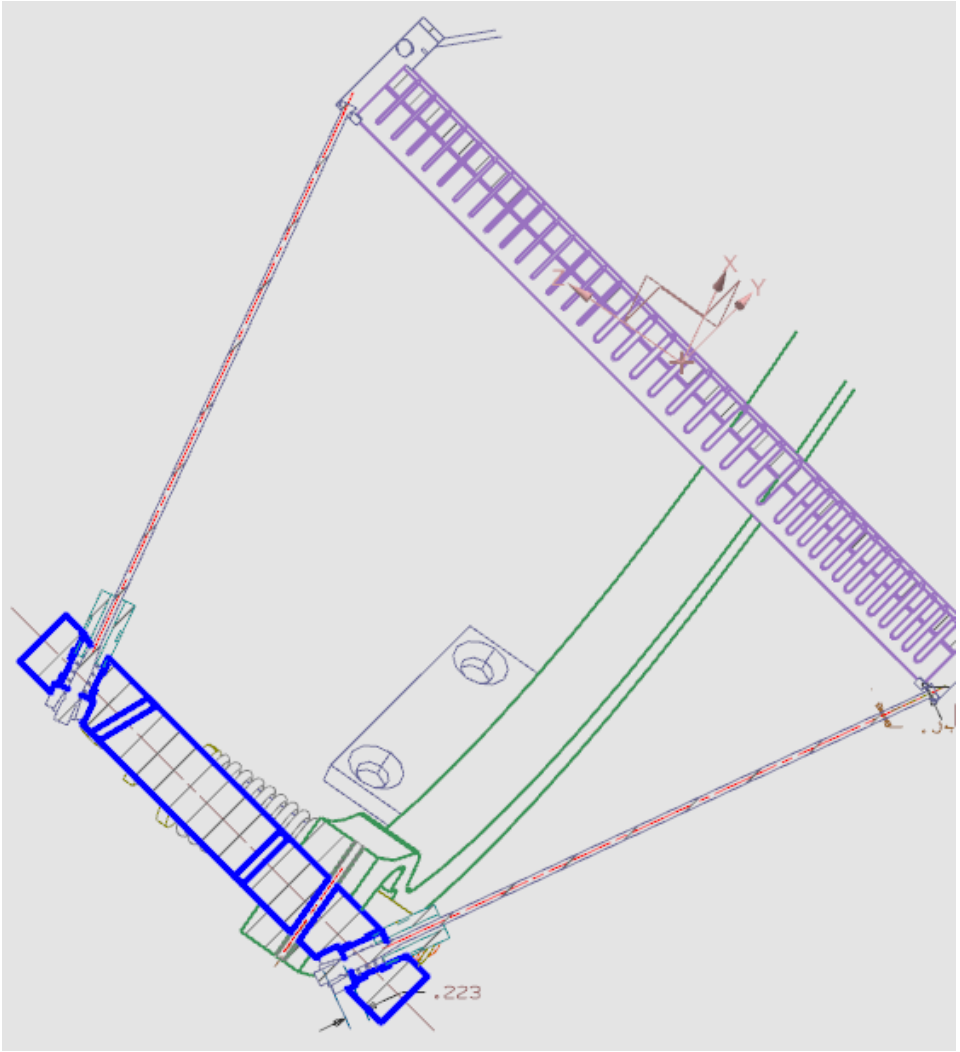

Detail of Spoke Adjustment Mechanism

Support Post is stainless steel, 303. (Translucent Green)

2 mm diameter Spoke is 1% La_2O_3 Tungsten (Purple)

Adjustment nut is 6061 Aluminum (Teal) or 303 SS

- SS Aircraft Wire tie not shown (to prevent loosening) needs to be added.

Spoke keeper and keeper insert are 303 stainless steel (Purple)

- This is like the mechanism that holds the valves in place in a car engine.

Spring is stainless steel (Purple)

- (McMaster Car item shown) Could change to a wave spring to increase stiffness if needed.

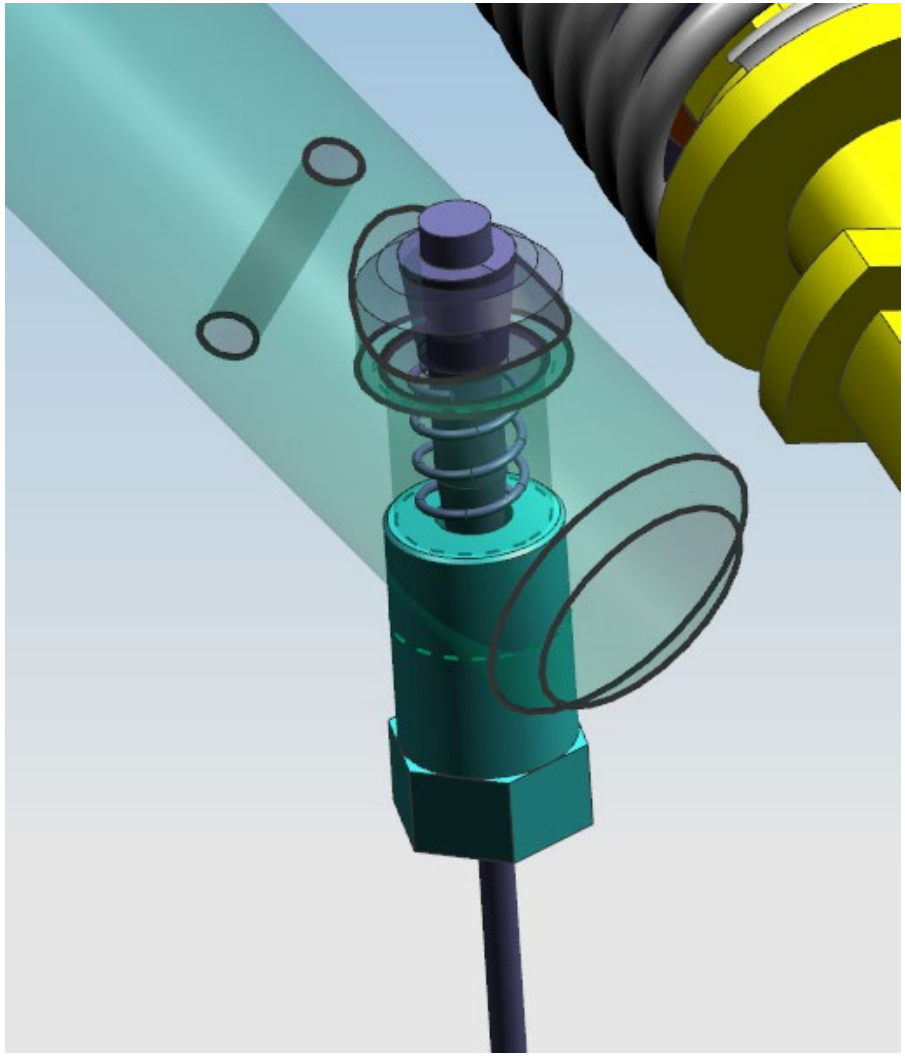

Detail of Spoke Adjustment Mechanism (2)

Problem: Threading Tungsten is difficult and expensive.

Solution: Grab spoke with a less expensive groove in the spoke and use a split valve keeper.

(haven't found commercial ones for 4 mm diameter valve stems. 5 mm, & 7 mm are common)

Note we added a bit of clearance to assemble this (image not updated here, see next page).

Note 3:1 taper on spoke diameter change for stress reduction.

Have added additional taper at the target end for stress reduction since last shown.

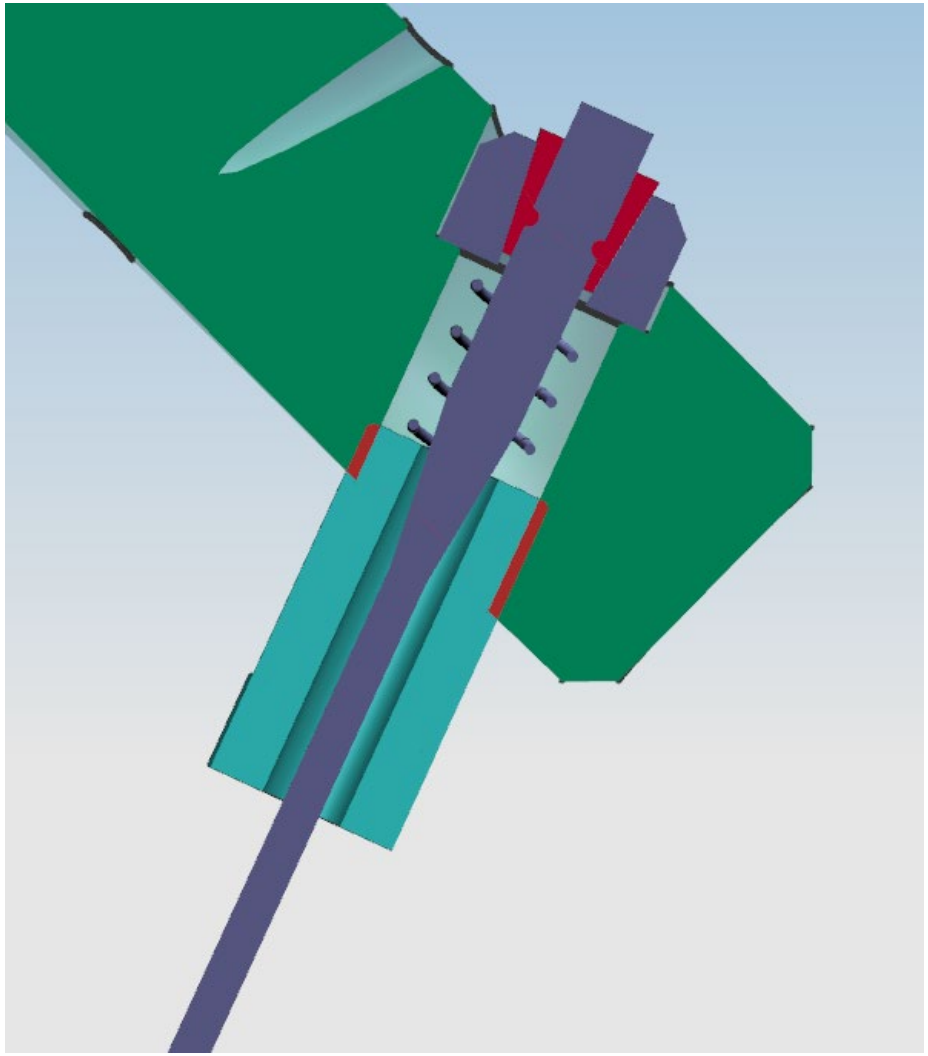

Detail of Spoke Adjustment Mechanism (2)

Note we added a bit of clearance to assemble this:

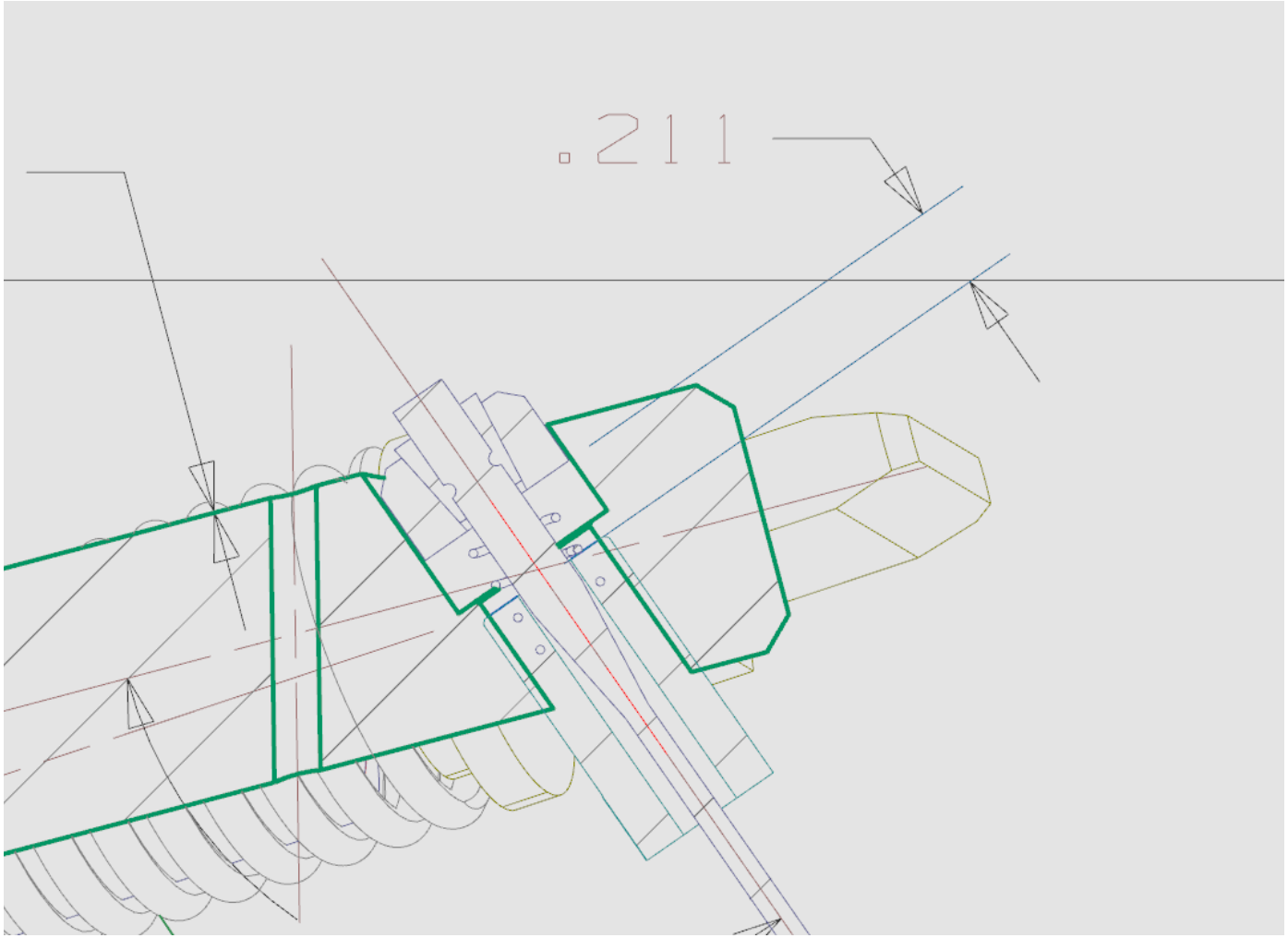

Keeper

Charge Question 2

In our review in July two suggestions were made:

1. Attempt to include a keeper over the small bits in case a spoke fails so that parts stay together during target removal.
   - Able to do in 4 of 6 locations.
   - Two spots interfere with inner surface of HRS
2. Consider a basket under target to catch any bits that break off.
   - Was proposed in 2015.
   - Interferes with existing remote handling scraper.
   - Additional material likely has negative impact on stopped muons, unable to get this simulated in G4
   - Potentially could increase target temperature as this acts as a thermal shield.
   - Result: not incorporated.

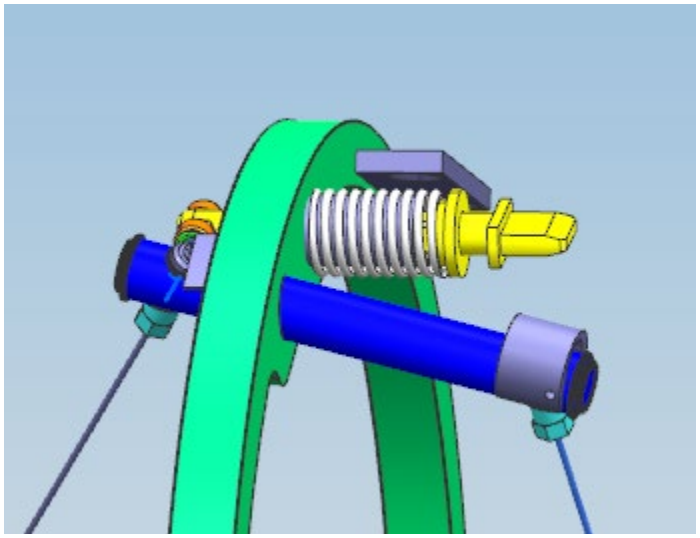

The Spring:

Corrosion-Resistant Compression Springs

These springs are more corrosion resistant than standard compression springs. They're also easier to compress than standard compression springs. As you squeeze a compression spring, it pushes back to return to its original length. Rate is the amount of force required for every inch of compression. The higher the rate, the harder it is to compress the spring.

302 stainless steel springs have good corrosion resistance.

Springs **with closed and ground ends** sit flat, so they won't buckle.

For technical drawings and 3-D models, click on a part number.

Inch

OD	ID	Wire Dia.	Compressed Lg. @ Max. Load	Max. Load, lbs.	Rate, lbs./in.	Material	End Type	Pkg. Qty.		Pkg.
0.375" Lg.										
0.24"	0.196"	0.022"	0.18"	2.09	10.43	302 Stainless Steel	Closed and Ground	5	9435K35	$5.29

Max Load, 2.09 pounds = 9.2 Newtons

McMaster Carr Part Number 9435K35

10 Newtons has been about the spoke tension discussed and analyzed in the vibration studies by RAL.

2 N is the optimum to ensure the spokes are always under tension with minimal deflection without losing significant preload with beam on.

Lower tension = lower stress = lower creep & higher tension = higher stress = higher creep, but higher natural frequency of assembly.

Tunable parameter after target assembled.

Spoke at the Target End

- 4.1 mm diameter hole in the target ring.
- 5 mm diameter half hemisphere on the spoke fits into a female ground sphere section in the ring.
  - Ball and Socket joint.
- Cold end (4 mm diameter) of the spoke enters the ring first during assembly.
- Ran a simple ANSYS to evaluate the stress at the ball / rod interface & ring after our review in July.
  - Revised design and re-ran ANSYS to show stress reduction.

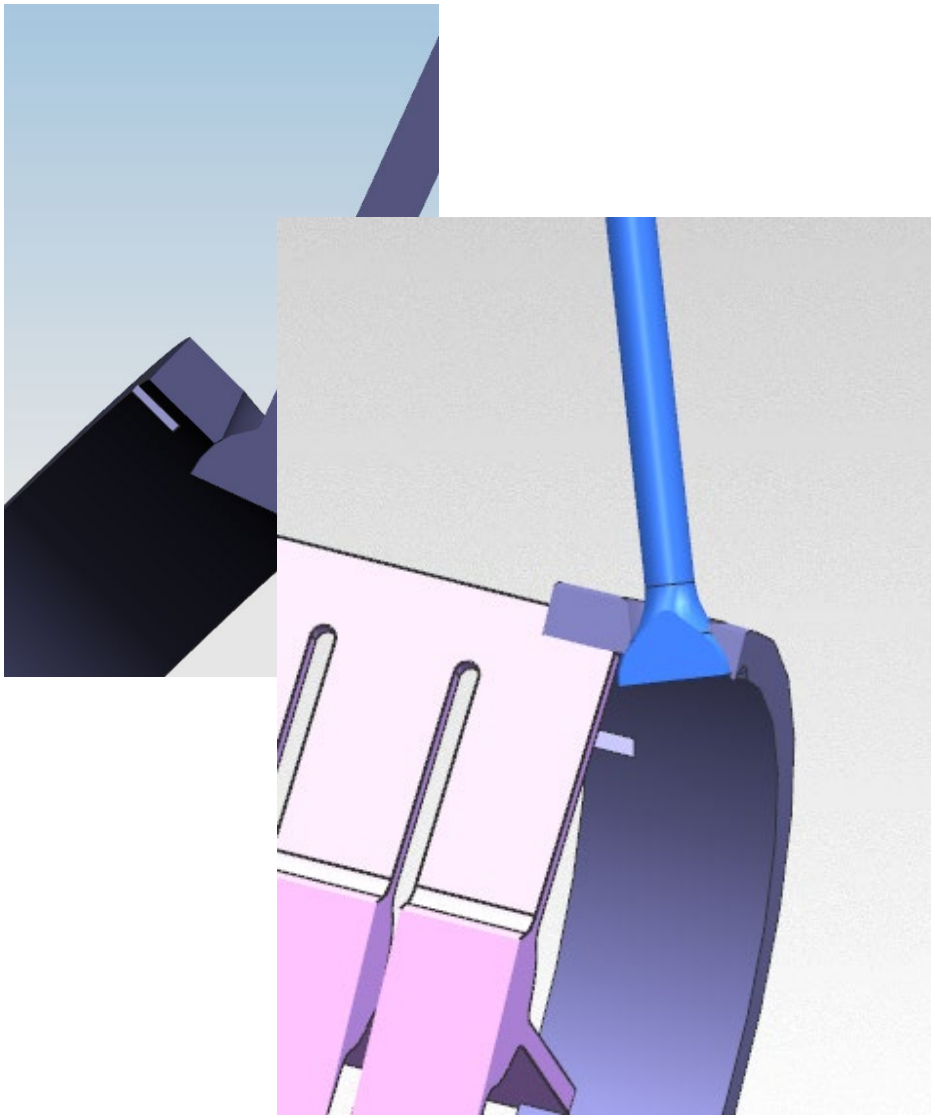

Target to Ring Connection:

- End Rings are separate objects:
  - Simplifies fabrication
  - Reduces thermal stress between hot fins and cold rings.
  - Assembly clearance is sufficient to allow thermal growth of fin without loading ring.
- Analysis indicates T operating = 1000 C (too high to use Inconel).
- Horizontal component of spoke tension keeps ring on target.
- Modified notch and target end based on fabrication feedback which also reduces stresses.

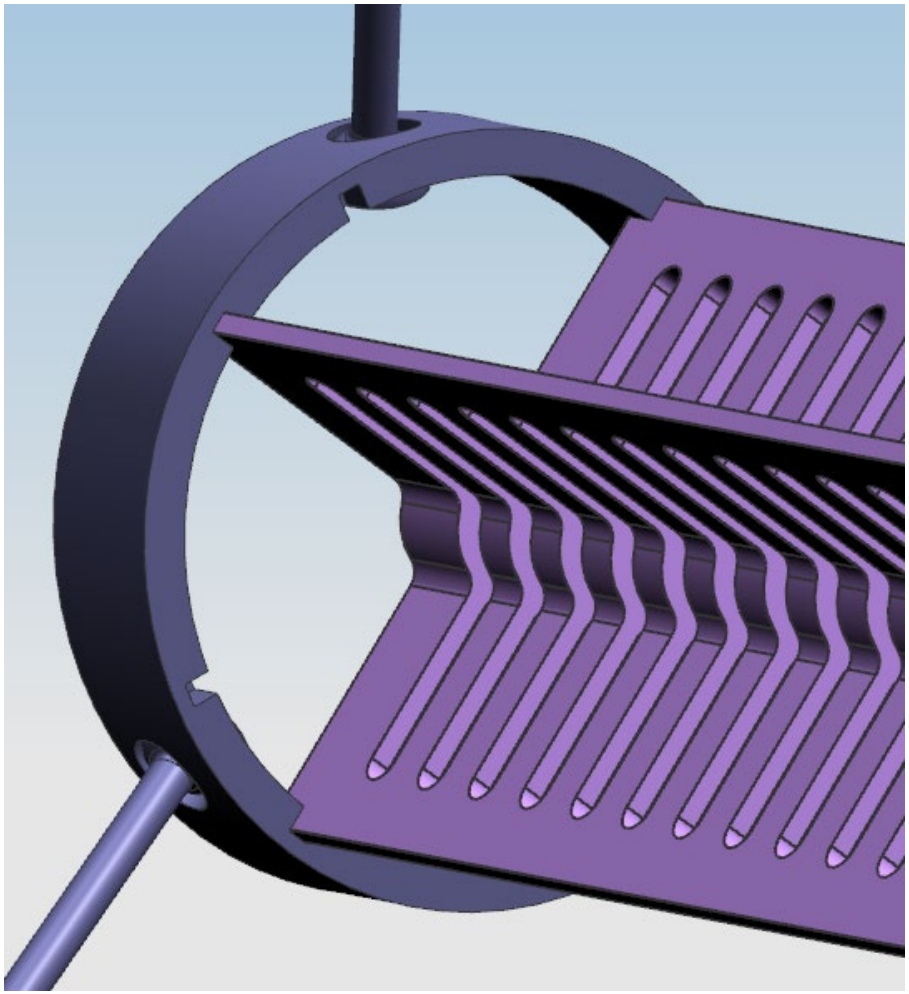

Stress and Creep

Consider Creep:

- A function of Temperature, Stress, and Time. Strain, ϵ, Described by Norton Creep Law:
  - Stress to the 0.9 power
  - Time to the 0.3 power
  - Constant B = 0.4, Q = 122 kJ/mol for 1% La_2O_3 doped W.
  - Conclude: Support target to minimize mechanical stress
  - Source:

AT0100392

D. Gallet et al. RM 40a 277

15th International Plansee Seminar, Eds. G. Kneringer, P. Rödhammer and H. Wildner, Plansee Holding AG, Reutte (2001), Vol. 1

CREEP LAWS FOR REFRACTORY TUNGSTEN ALLOYS BETWEEN 900 AND 1100°C UNDER LOW STRESS

D. Gallet* J. Dhers*, R. Levoy*, P. Polcik**

*CEA, Centre de la vallée du Rhône, Service STME
BP111, 26702 Pierrelatte, France
** Plansee Aktiengesellschaft

Quantify Allowable Stress for Acceptable Creep:

- Time = 2 x 10^7 seconds = 5555.6 hours
- Maximum Desired Deformation set at .5 mm
  - An analysis by Kevin Lynch on the stopped muon production for a rod target deformed by 2 mm from several years ago indicated little change in production for this deformation.
  - At 0.5 mm, the P-Delta effect should be small

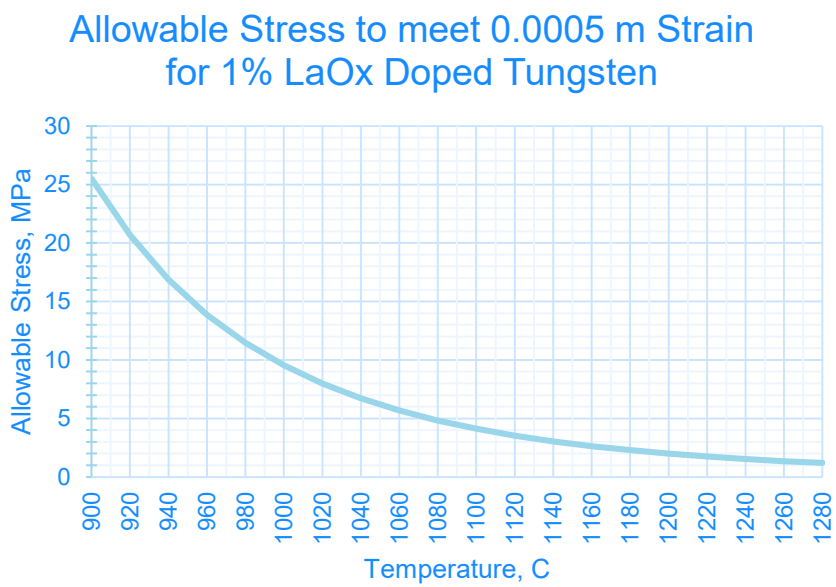

Hand Calculated Stresses in Target and Spokes:

- Target Bending Stress:
  - Moment of Inertia (rolled at 15 degrees) = 1205 mm^4
  - Bending stress for a simply supported beam (assume uniform loading (not perfectly true) = 0.99 MPa
    at 1130 C
- Target Axial Stress:
  - Axial Area = 12 mm^2
  - Axial Load due to target + rings weight = 0.586 N
  - Axial Stress due to target weight = 0.048 MPa
  - Axial Stress due to 3 sets of pre-loaded spokes
    (at 2 N each)= 0.17 MPa; (at 10 N each) Axial Stress = .85 MPa
  - Total Axial Stress = 0.219 MPa
    at 1130 C

Hand Calculated Stresses in Target and Spokes:

- Spoke Stresses:
  - Based on 2 N preload:
    - 2 mm diameter, A = 3.142 mm^2, = 3.14×10^{-6} m^2
    - Stress = 6.37×10^{-5} N/m^2 = 0.6 MPa
  - For 10 N Preload:
    - Stress = 3.18×10^{-4} N/m^2 = 3.0 MPa
  - Load for Target Weight of 2.738 N (mass = 0.274 kg) and two rings each with weight of 0.281 N (mass = 0.0287 kg each). Vertical Load component at each end is: 1.65 N
  - Spoke tension = 1.65 N / (20 Cos * 15 Cos) = 1.81 N
  - Spoke Stress for target weight = .58 MPa
  - Total spoke stress (for upper spokes) = 1.2 MPa to 3.6 MPa at 945 C

Resulting Hand Calculated Stresses for Acceptable Creep:

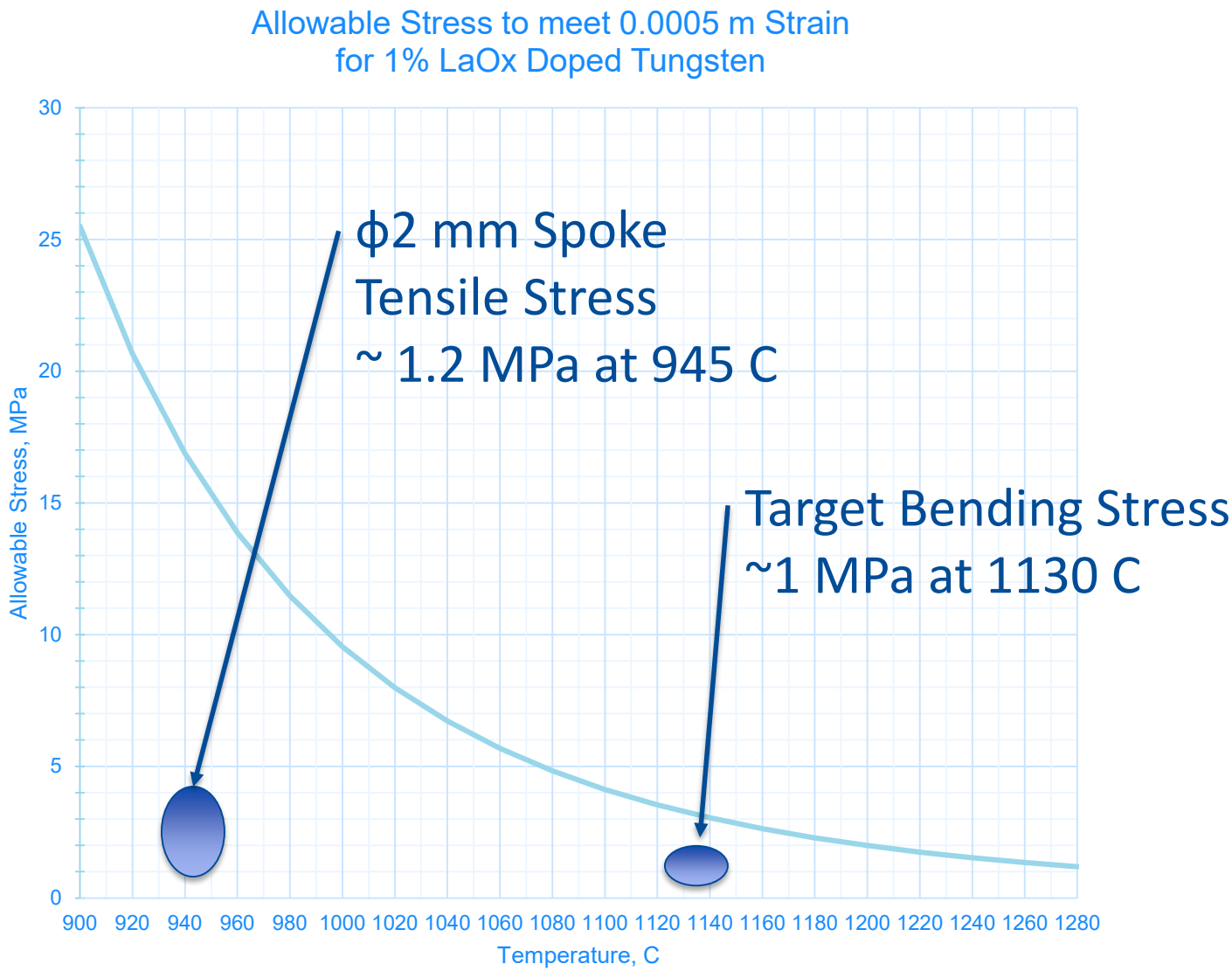

Ingrid’s Stress and Deflection Results for Hayman2

Status of Fabrication Drawings for Hayman2

Fabrication Drawings in Teamcenter:

Charge Question 4

F10120807-A;1-MU2E HAYMAN 2 TARGET - BICYCLE RING ASSEMBLY (eBOM) - Working; Any Status - Date - "New"

BOM Line	Revision	Date Released	Item Name
F10120807-A;1-MU2E HAYMAN 2 TARGET - BICYCLE RING ASSEMBLY (eBOM)	A	08-Jan-2020 08:...	MU2E HAYMAN 2 TARGET - BICYC...
F10082193--;1-ROLLER RETAINER x 6	-	10-Jan-2018 15:...	ROLLER RETAINER
FC0013520--;1-FHCS,M3x.5x6LGxFT,90Deg,SS18-8 x 6	-	18-Apr-2012 12:...	FHCS,M3x.5x6LGxFT,90Deg,SS18-8
F10082151--;1-BRONZE BUSHING x 6	-	10-Jan-2018 15:...	BRONZE BUSHING
F10082153--;1-ROLLER x 6	-	10-Jan-2018 15:...	ROLLER
F10082150--;1-LATCH SHAFT x 3	-	10-Jan-2018 15:...	LATCH SHAFT
F10082194--;1-PIN (eBOM) x 3	-	10-Jan-2018 15:...	PIN
FC0038187--;1-SPRING_PIN,1/8x1_1/2LG:SS,18-8 x 3	-	27-Feb-2014 07:...	SPRING_PIN,1/8x1_1/2LG:SS,18-8
F10121324-A;1-HAYMAN 2 TARGET - 14<$s> TARGET RING WELDMENT (eB...	A	07-Jan-2020 08:...	HAYMAN 2 TARGET - 14<$s> TARG...
F10121763-A;1-HAYMAN 2 TARGET - 14<$s> TARGET RING (eBOM)	A	07-Jan-2020 08:...	HAYMAN 2 TARGET - 14<$s> TARG...
F10132145--;1-HAYMAN 2 TARGET - SIDE SUPPORT PLATE x 2	-	07-Jan-2020 08:...	HAYMAN 2 TARGET - SIDE SUPPOR...
F10132144--;1-HAYMAN 2 TARGET - SPRING SUPPORT COLLAR x 3	-	07-Jan-2020 08:...	HAYMAN 2 TARGET - SPRING SUPP...
F10122543-A;1-GUIDE KEEPER x 12	A	31-Dec-2019 10...	GUIDE KEEPER
F10122542-A;1-KEEPER WASHER x 6	A	23-Dec-2019 13...	KEEPER WASHER
F10123072-A;1-COMPRESSION NUT, M10 x 1.25 x 6	A	31-Dec-2019 10...	COMPRESSION NUT, M10 x 1.25
FC0072611--;1-COMPRESSION SPRING, .375"LG X .24" OD X .196"ID x 6	-	11-Jun-2019 08:...	COMPRESSION SPRING, .375"LG X ....
F10122538-A;1-HAYMAN 2 TARGET - SPOKE x 6	A	31-Dec-2019 10...	HAYMAN 2 TARGET - SPOKE
F10122537-A;1-HAYMAN 2 TARGET - SPOKE TUBE SUPPORT (eBOM) x 3	A	23-Dec-2019 13...	HAYMAN 2 TARGET - SPOKE TUBE ...
F10123352--;1-HAYMAN 2 TARGET - SPOKE COVER x 4	-	07-Jan-2020 08:...	HAYMAN 2 TARGET - SPOKE COVER
F10123399--;1-HAYMAN 2 TARGET - TUBE CLIP x 2	-	07-Jan-2020 08:...	HAYMAN 2 TARGET - TUBE CLIP
FC0038183--;1-SPRING_PIN,1/8x1LG:SS,18-8 x 4	-	27-Feb-2014 07:...	SPRING_PIN,1/8x1LG:SS,18-8
F10123049--;1-HAYMAN 2 TARGET ASSEMBLY (eBOM)	-	31-Dec-2019 10...	HAYMAN 2 TARGET ASSEMBLY
F10120800-C;1-HAYMAN 2 TARGET - BODY (eBOM)	C	08-Jan-2020 07:...	HAYMAN 2 TARGET - BODY
F10121325-C;1-HAYMAN 2 TARGET - END RING x 2	C	08-Jan-2020 07:...	HAYMAN 2 TARGET - END RING
FC0074848--;1-TYPE U DRIVE SCREW - #0 X 3/16" LONG, 18-8 S.S. x 4	-		TYPE U DRIVE SCREW - #0 X 3/16" L...

Drawings Released in Teamcenter (except for one common part (a commercial component, no drawing needed to procure).

Target Drawings

Charge Question 4

- Drawings were extracted from Teamcenter 1-9-2020 and PDF's are in a zip file in the Mu2e docdb 30814.

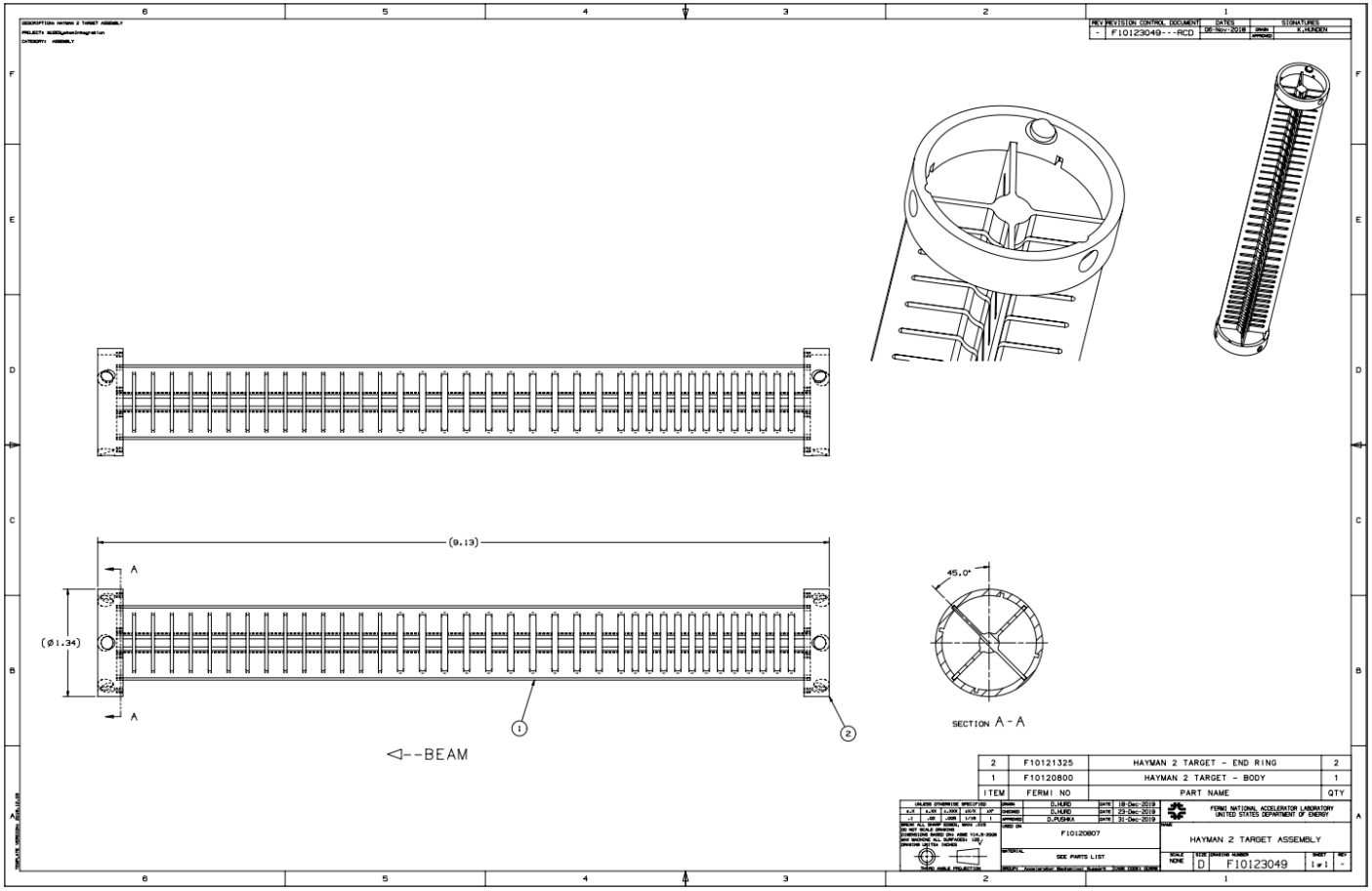

Target in the Bicycle Ring Drawing

Charge Question 4

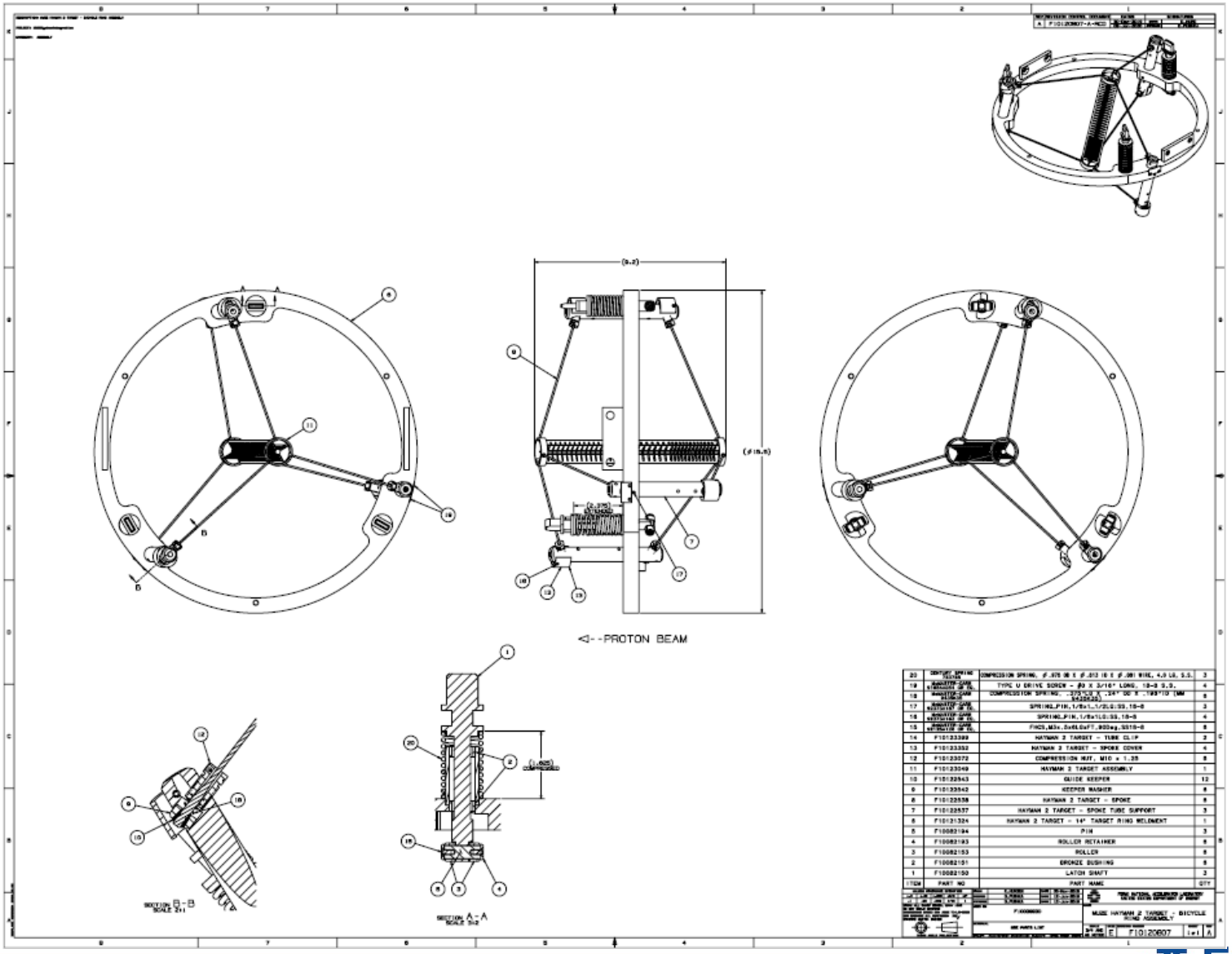

ITEM	PART NO	PART NAME	QTY
20	[illegible]	COMPRESSION SPRING, [illegible]	3
19	[illegible]	TYPE U DRIVE SCREW - [illegible]	4
18	[illegible]	COMPRESSION SPRING, [illegible]	6
17	[illegible]	SPRING_PIN,1/8x1.1/2LG;SS,18-8	3
16	[illegible]	SPRING_PIN,1/8x1LG;SS,18-8	4
15	[illegible]	FHCS,M3x.5x6LGFT,900mg,SS18-8	8
14	F10123389	HAYMAN 2 TARGET - TUBE CLIP	2
13	F10123352	HAYMAN 2 TARGET - SPOKE COVER	4
12	F10123372	COMPRESSION NUT, M10 x 1.25	6
11	F10123349	HAYMAN 2 TARGET ASSEMBLY	1
10	F10122543	GUIDE KEEPER	12
9	F10122542	KEEPER WASHER	6
8	F10122538	HAYMAN 2 TARGET - SPOKE	6
7	F10122537	HAYMAN 2 TARGET - SPOKE TUBE SUPPORT	3
6	F10121324	HAYMAN 2 TARGET - 14" TARGET RING WELDMENT	1
5	F10082194	PIN	3
4	F10082193	ROLLER RETAINER	6
3	F10082153	ROLLER	6
2	F10082151	BRONZE BUSHING	6
1	F10082150	LATCH SHAFT	3

MUSE HAYMAN 2 TARGET - BICYCLE RING ASSEMBLY

F10120807

Target Model in Teamcenter

Charge Question 4

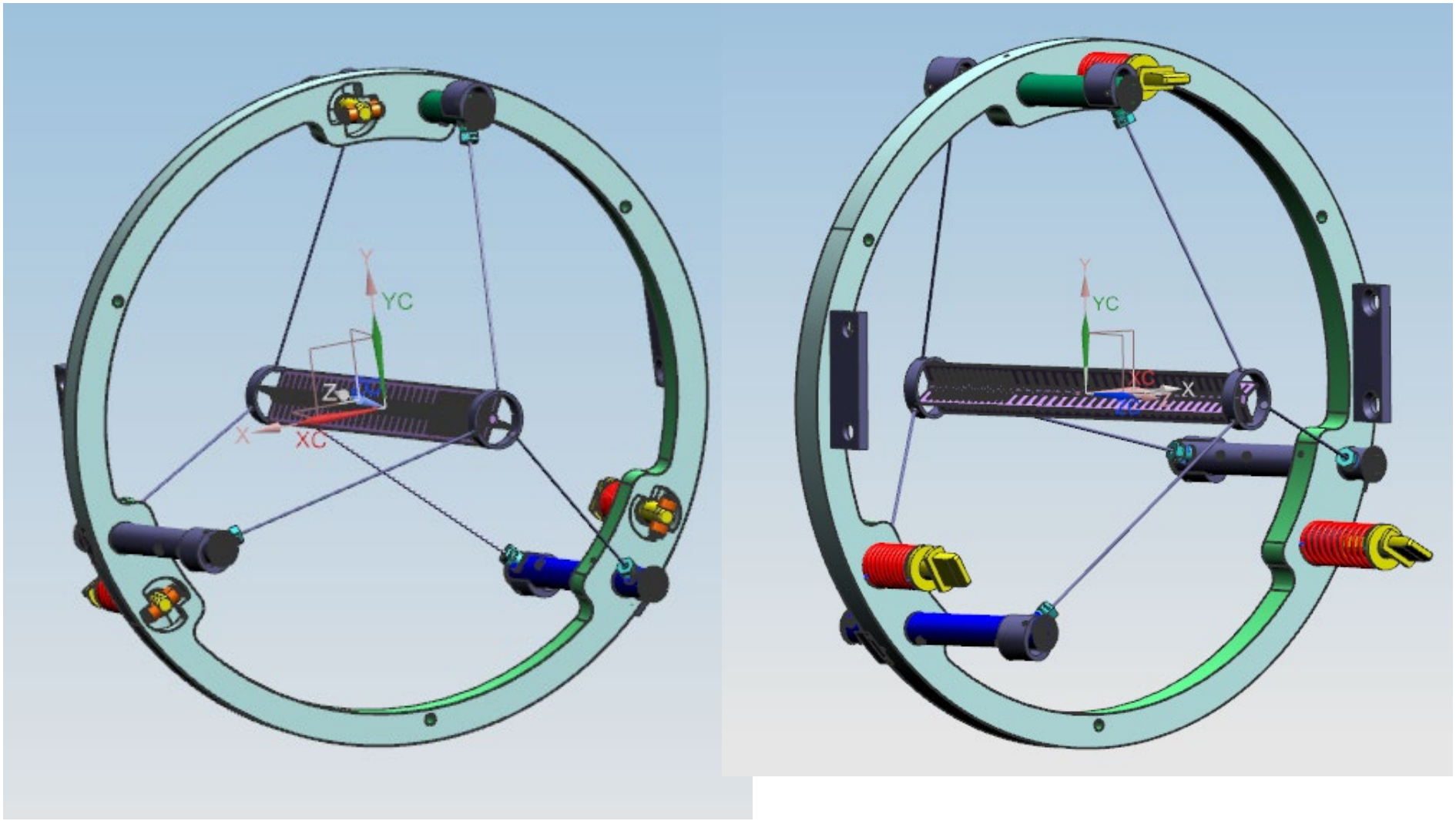

Recommendations from Previous Reviews

Recommendations from Previous Reviews:

Charge Question 2

- 2018 IPR: Develop a plan for the final target design and procurement that satisfies the Mu2e requirements by the next DoE/OS IPR.
  - A plan was developed and executed to modify the design of the Production Target to ensure that it meets the requirement to survive for at least a year at nominal beam intensity. Oxidation and creep are the main issues. These have been addressed through the addition of fins that reduce the temperature significantly and stiffen the target against creep, and by changing the solid tungsten rod to a series of smaller tungsten pieces separated by gaps. The addition of additional material does decrease the stopped muon yield, but this is acceptable compared to the risk of downtime associated with changing a target in the middle of a run.

Recommendations from Previous Reviews:

Charge Question 2

- 2019 TSD Review on November 15th:
  - 1. Document a maximum tolerance stack-up with regards to target assembly, alignment, deformation (including creep) and beam positioning concerns. Determine if possible offset is within experimental positioning requirements.
  - 2. Perform FEA iteration for two additional scenarios listed below. Confirm target/target assembly stress, temperature, & deformation remain within engineering or physics limitations given continuous operation at this offset for 1 year @ 8kW for scenario (b).
    - a. Accident condition assuming rapid extraction occurs as opposed to slow extraction.
    - b. Continuous operation with beam center at greatest possible offset relative to target due to possible alignment/creep/etc… stack-up documented above.
  - 3. Ensure creation and independent review, or confirmation thereof, of supporting documents related to target interfaces, assembly procedures, installation/retraction plans, testing, & commissioning are performed.
- Interpretation of these recommendations:
  - 1. Document that the target can be adjusted into the proper place considering all the fabrication tolerances. This is a work in progress.
  - 2. FEA with Single turn extraction & Off-Axis steady state beam FEA . Both evaluations will occur after FEA resources become available again (transitioned to performing LBNF work in the short term).
  - 3. Document the target assembly & alignment procedures. (Installation machine testing and commissioning is outside the scope of the target CRR). This is work in progress.

Charge Question 2

Previous Off-Axis Analysis results:

- In Docdb 2406 (circa 2012) by RAL a rod target was analyzed for a 2 mm off-set beam. Results include the following images with nominal beam position on the left, 2 mm off-set bean on the right:

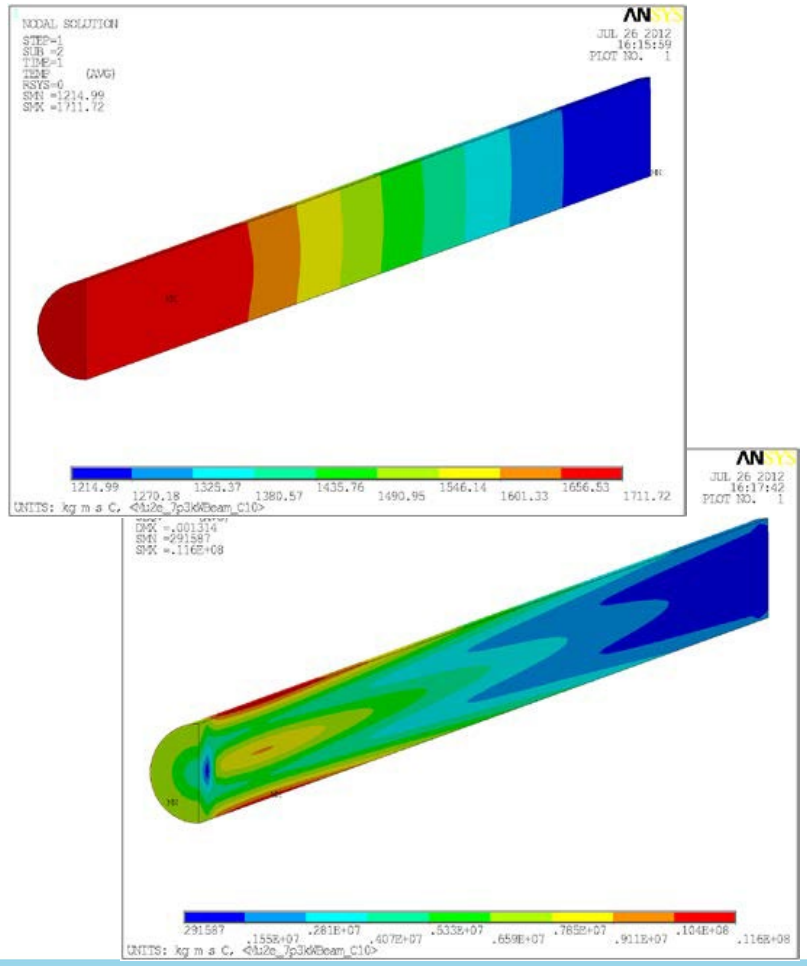

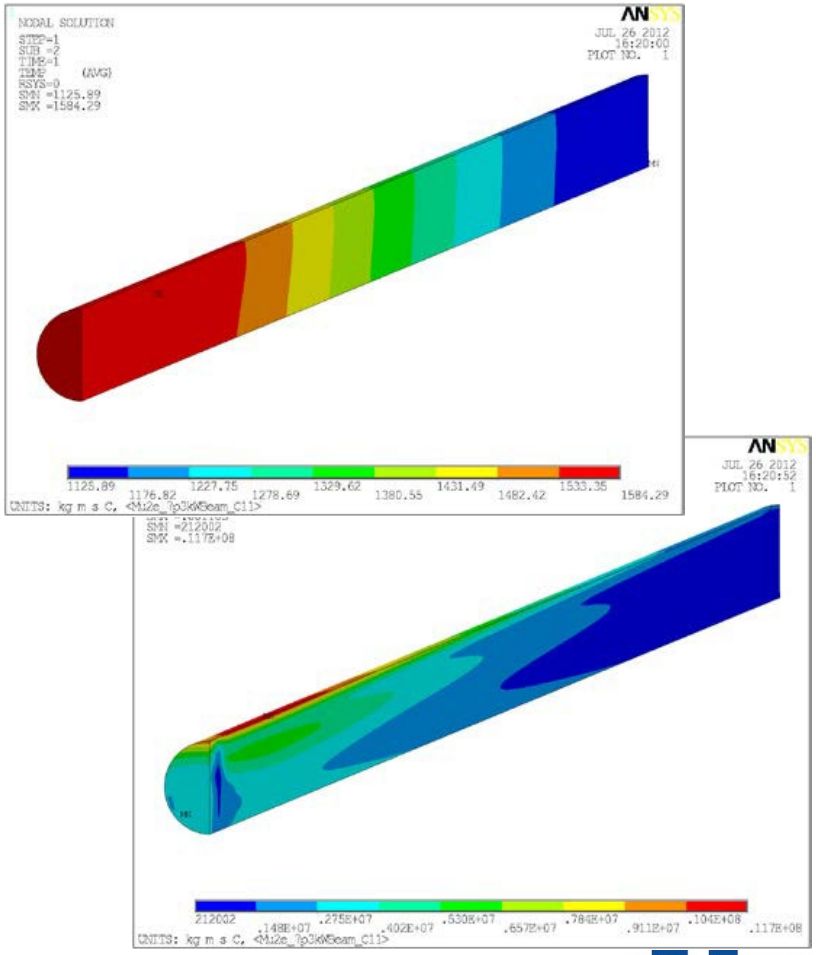

Risks

Charge Question 7

Risks:

- Target had two risks in the risk registry; both transferred to operations circa 2014.
- Obviously, general risks concerning manpower, fabrication difficulties remain, although not captured in the registry.

ID	DocDb #	Type	Title	Date of Risk	Mitigation Cost (included in plan)	Category
ACCEL-041		Threat	Heat and radiation shield insufficient to protect the Production Solenoid	FY21-FY25		Transfer to operations
ACCEL-038	3344	Threat	Radiatively cooled target will not survive in the Beam.	FY17-FY18	$ 100	Transfer to operations
ACCEL-151	3833	Threat	Redesign the Remote Handling System for Water cooled target	FY17-FY18	$ 100	Transfer to operations

Fabrication and QA Procedures

Charge Question 4

Fabrication:

- Greg Bulat, Fabrication Specialist, visited Unified Tool on 1/3/2020 to review the latest drawings and discuss this difficulty of this fabrication, see email below:

Hi Dave,
Please see emails below from Unified tool. Both Unified and myself feel your target can be fabricated and will be an interesting project. Please let me know if I can do anything.
Greg

Sent from my iPhone

Begin forwarded message:

From: Steve Sciurba <ssciurba@unifiedtool.com>
Date: January 6, 2020 at 8:34:31 AM CST
To: Gregory A Bulat <bulatg@fnal.gov>
Subject: RE: Hayman Target Assy

HI Greg

We can make like it is designed now but it will take a few more setups to do it. If you want to add radius on the pockets and legs you can but it is not necessary

Steve

- This is consistent with previous discussions with Unified and other EDM capable vendors.
- The target can be built

Quality Assurance Procedures:

Charge Question 8

- The components (target, spokes, bicycle ring, etc) will all be procured as build-to-print items.
- Acceptance criteria are the dimensions and tolerances shown on the fabrication drawings.
  - There is not a separate written specification.
  - Will require material certificate of conformance (COC) and certified test report (CTR)
- Upon receipt, the completed parts will be measured using standard machinists measuring tools (dial calipers, micrometers, surface plate, etc.) to confirm dimensions have been met within specified tolerances.
  - CMM measurements are not required.
- Mu2e Docdb 7112 include is where the above is documented says:
  - Target Specific:
  - Delivered parts compared to drawings. Deviations identified and evaluated on a case by case basis
  - Material Certificates of Conformance (COCs) and Certified Test Reports (CTR's) compared to specifications.
  - Target in bicycle ring assembly measured to verify correct target position.

Future Work

Future Work (on Project):

- Target Design Work Funded by the Project is finished.
  - (regardless of the outcome of this review, the project has spent the budget)
- Will Perform cross check of EDEP from the Framework model (Bob Bernstein) with EDEP from G4 Beamline (Kevin Lynch).
  - Not likely to repeat FEA unless there is an error discovered with the G4 Beamline EDEP data.
- Map existing Edep data onto to ANSYS model to simulate off-axis beam and re-run ANSYS.
- Re-run ANSYS with EDEP over shorter time period to simulate single turn extraction accident condition.
- Design Target Alignment Tooling and Document Procedure.
  - Calculate stack-up tolerances and compare to adjustment range.

Future Work (Off Project):

- However, Off-Project Work Continues:
  - Staff are working closely with Euclid Tech Labs, the recipient of a phase 1 SBIR to develop a high emissivity surface treatment (coating) for a tungsten target.
  - If successful, the SBIR results could be applied to a future target funded as part of operations. Emissivity enhancements could result in a target with higher stopped muon rates in the stopping target because of fin area reductions.
  - An LDRD full proposal was submitted for an actively cooled Mu2e II target design, capable of being tested in the existing Mu2e facility.
    - If built using operations funds after the LDRD design effort, this is a potential actively cooled back-up Mu2e target.

Conclusions

Conclusions:

Charge Question 1

- Target Core Visible by Extinction Monitor
- Support matched to transverse and longitudinal position requirements
- Works with existing remote handling equipment
- Stress and Temperatures result in Operating conditions below the Curve where Creep will exceed the desired displacement over 1 year of operation
- Tungsten oxidation rate calculated to be negligible over 1 year of operation.
- Stopped Muon Production approximately 90+% of the realistic TDR value.

Discussion