DESCRIPTION: HRS-D BRONZE ASSEMBLY
CATEGORY: VESSEL PROJECT: MU2E%systemintegration

REV	REVISION CONTROL DOCUMENT	DATES		SIGNATURES	
H	F10078098-H-RCD	07-Jan-2019	DRAWN	K.HUNDEN	
		07-Jan-2019	APPROVED	D.PUSHKA	

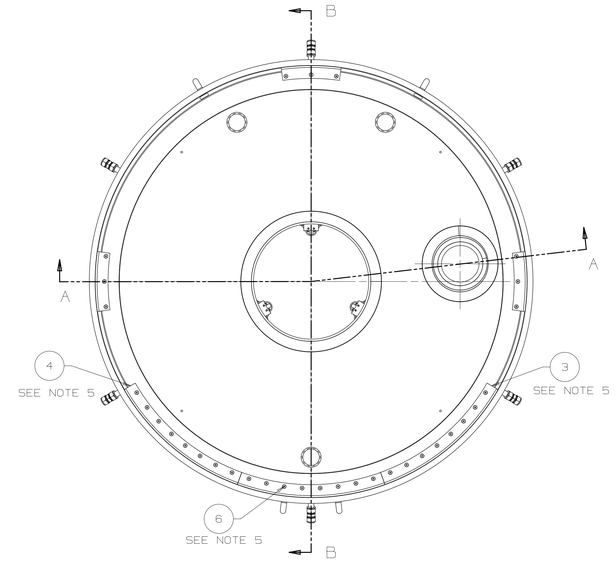

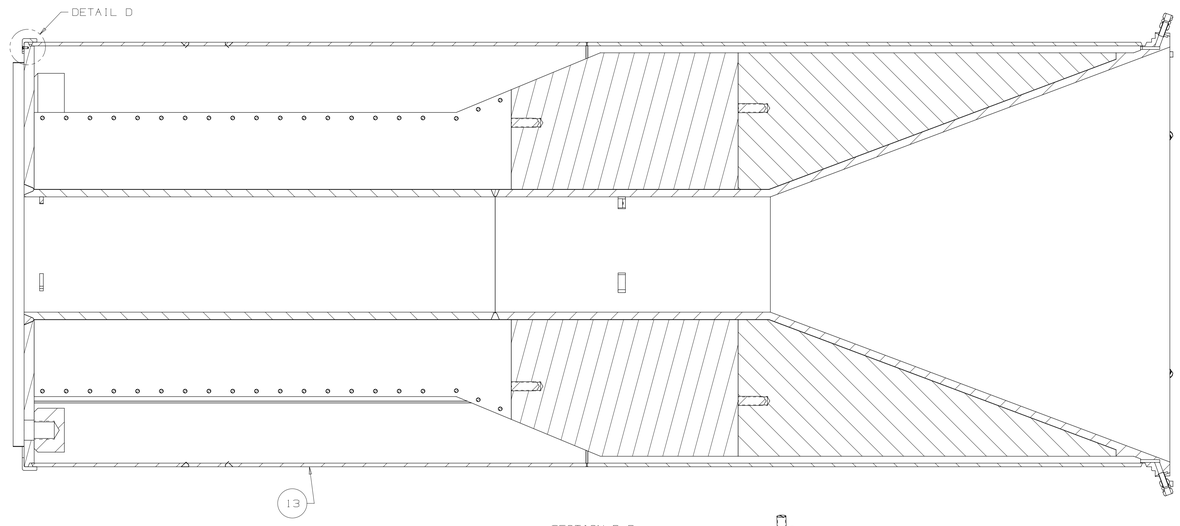

SECTION B-B

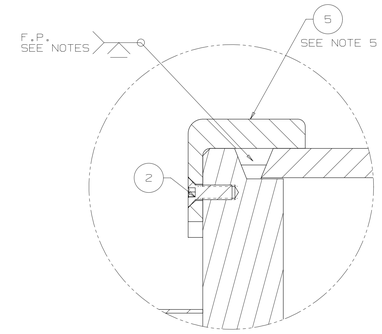

DETAIL D
SCALE 1:1

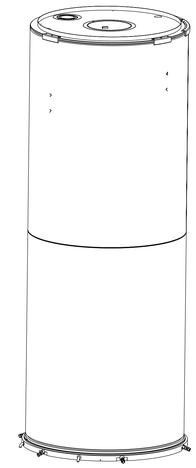

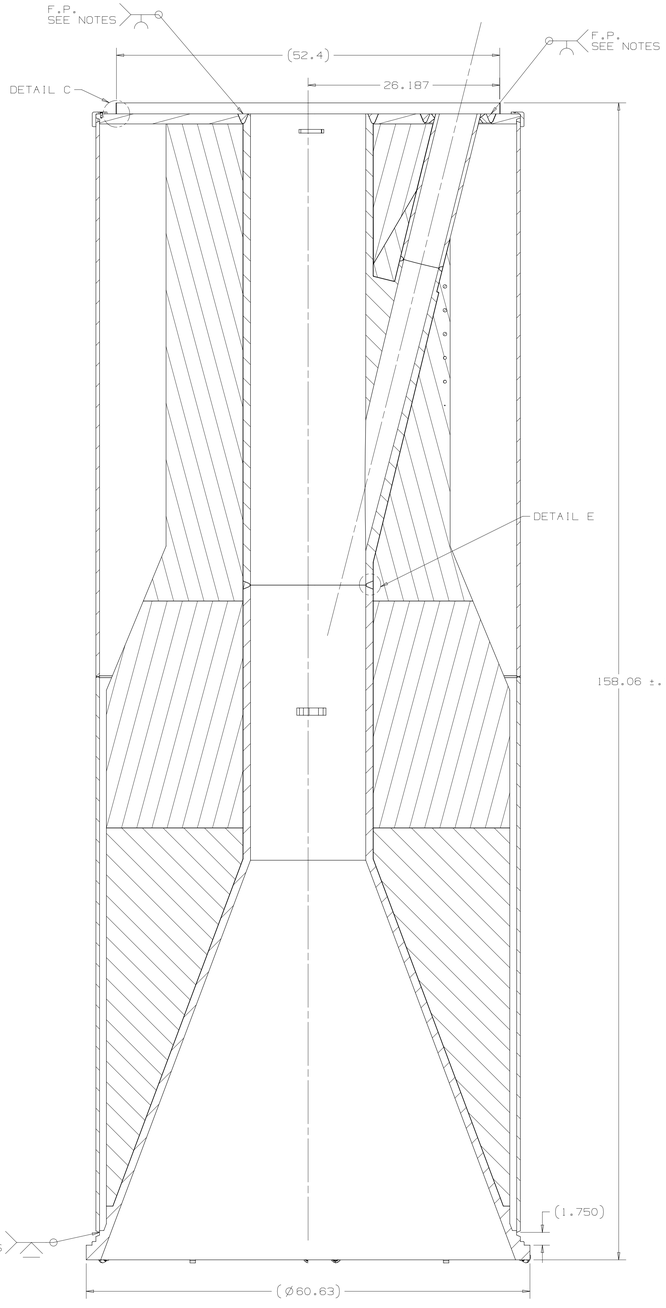

SECTION A-A

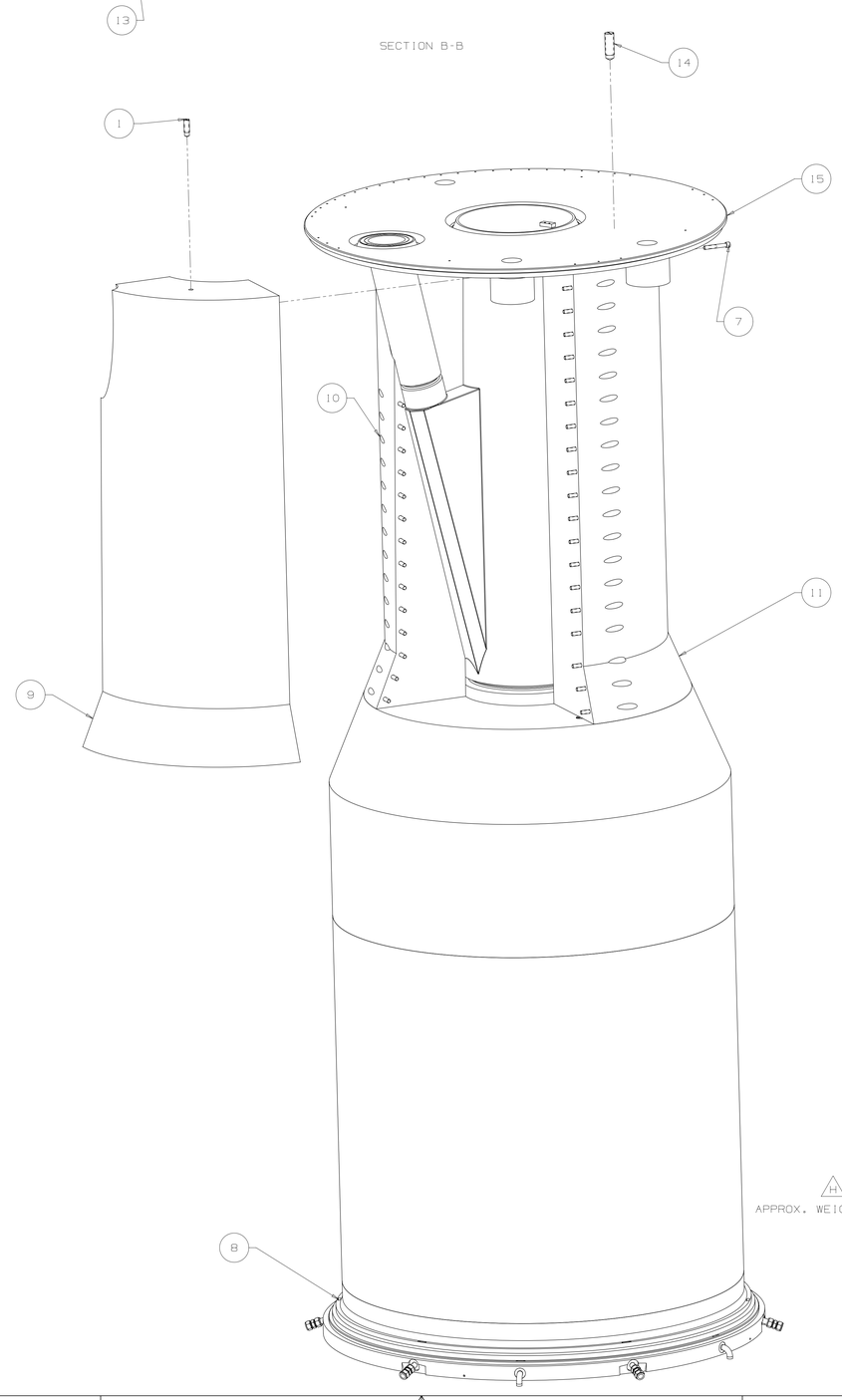

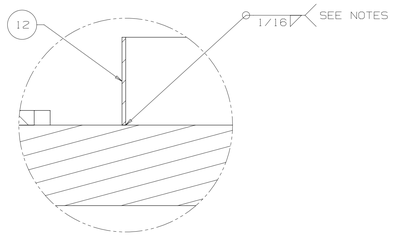

DETAIL C
SCALE 1:1

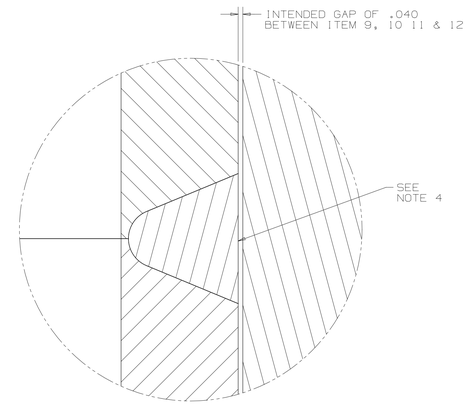

DETAIL E
SCALE 2:1

NOTES:

1. ALL WELDING PER ASME SECTION IX.
2. HELIUM LEAK TEST SHALL BE PERFORMED WITH A MINIMUM DEMONSTRATED SYSTEM SENSITIVITY OF 1 X 10^{-8} STANDARD CC PER SECOND OF HELIUM USING A CALIBRATED LEAK. WELD JOINTS SHALL BE BAGGED AND FLOODED WITH HELIUM AND THE HELIUM SHALL REMAIN FOR A PERIOD OF TIME EQUAL TO OR GREATER THAN THE THREE TIMES SYSTEM RESPONSE TIME. ALL INDIVIDUAL LEAKS GREATER THAN 1 X 10^{-7} STANDARD CC HELIUM PER SECOND SHALL BE REPAIRED AND RE-TESTED. SUM OF ALL LEAKS MUST BE LESS THAN 5 X 10^{-7} STANDARD CC HELIUM PER SECOND. HELIUM LEAK TESTING WILL BE OBSERVED BY FERMILAB STAFF. VENDOR IS RESPONSIBLE FOR PROVIDING TEMPORARY COVER PORTS, MASS SPECTROMETER, HELIUM, AND CALIBRATED LEAK.
3. VENDOR SHALL SUBMIT WPS (WELD PROCEDURE SPECIFICATION), POR (PROCEDURE QUALIFICATION RECORD) AND WQR (WELDER QUALIFICATION RECORD) TO FERMILAB PRIOR TO START WELDING. ALL WELDS SHOWN SHALL USE A TIG PROCESS.
4. INTERIOR & EXTERIOR SURFACE OF WELDS SHALL BE GRIND FLUSH TO CREATE A CONTINUOUS SURFACE OF TUBE. NO WELD BEAD BUILD-UP ALLOWED INSIDE OR OUTSIDE OF TUBE.
5. SHIP ITEMS 3, 4, 5 & 6 LOOSE IN A BAG, TO ASSEMBLY AFTER ARRIVAL TO FERMILAB.

APPROX. WEIGHT : 63,365 LBS

ITEM	VENDOR NO	DB PART NO	DB PART NAME	QTY
15		F10113842	LINNER END PLATE WELDMENT	1
14		F10078072	LIFTING HOLE FILLER 1	2
13		F10078081	OUTER SHELL WELDMENT	1
12		F10078100	BELLOWS ON END PLATE	1
11		F10078082	HRS-D BRONZE-03A	1
10		F10078083	HRS-D BRONZE-03B	1
9		F10078084	HRS-D BRONZE-03C	1
8		F10078097	INNER LINER WELDMENT	1
7		F10089431	SHCS, 1/2-13 UNC-2B, PARTICIAL THD, BRONZE 63200	54
6		F10078080	BRONZE SLIDING BEARING - BOTTOM	1
5		F10078087	BRONZE SLIDING BEARING	3
4		F10078095	BRONZE SLIDING BEARING - BOTTOM LEFT	1
3		F10078102	BRONZE SLIDING BEARING - BOTTOM RIGHT	1
2		FC0012876	FHCS,1/4-20x0.75LGxFT,82Deg,SS18-8,BO	33
1		F10078073	LIFTING HOLE FILLER 2	2

UNLESS OTHERWISE SPECIFIED

±.X	±.XX	±.XXX	±X/X	±X°
.1	.02	.005	1/16	1°

BREAK ALL SHARP EDGES .015 MAX.
DO NOT SCALE DRAWING
DIMENSIONS BASED ON ASME Y14.5-2009
MAX. ALL MACH SURFACES 125
DRAWING UNITS: INCHES

DRAWN	K.HUNDEN	DATE	25-Aug-2017
CHECKED	D.SCHMITT	DATE	17-Aug-2017
APPROVED	D.PUSHKA	DATE	07-Jan-2019

USED ON: F10081713, F10039830

MATERIAL: SEE PARTS LIST

GROUP: Accelerator Mechanical Support | CAGE CODE: 0U5R6

FERMI NATIONAL ACCELERATOR LABORATORY
UNITED STATES DEPARTMENT OF ENERGY

NAME: HRS-D BRONZE ASSEMBLY

SCALE	SIZE	DRAWING NUMBER	SHEET	REV
NONE	E	F10078098	1 or 1	H