DESCRIPTION: INNER LINER FOR HRG-D
CATEGORY: LINER PROJECT: MUSESystemIntegration

REV	REVISION CONTROL DOCUMENT	DATES	SIGNATURES	
F	F10078078-F-RCD	30-Oct-2018	DRAWN	K.HUNDEN
			APPROVED	D.PUSHKA

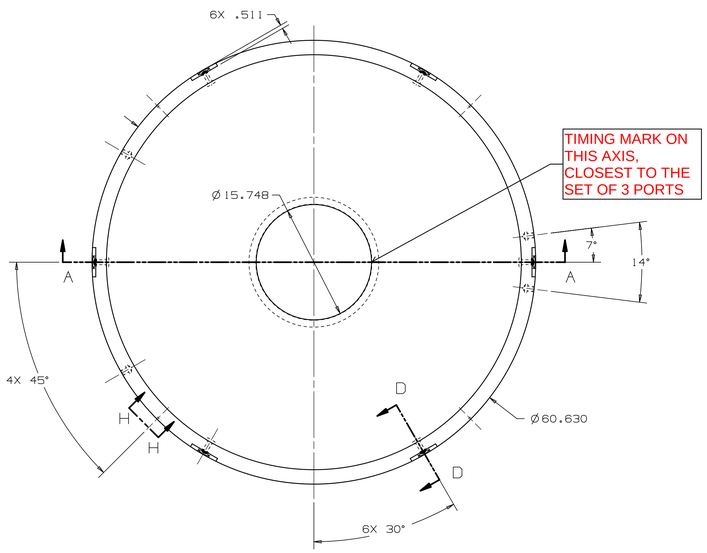

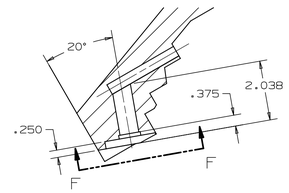

SECTION D-D

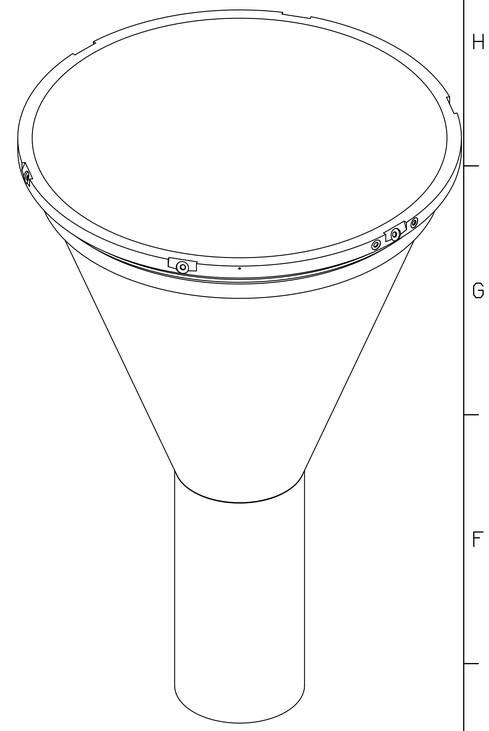

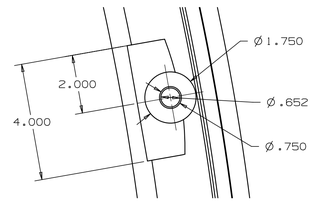

SECTION F-F

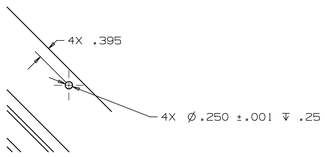

SECTION H-H

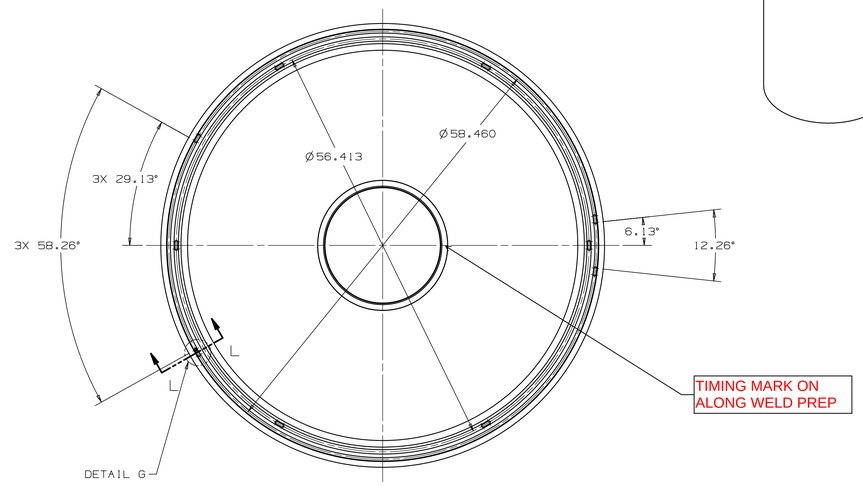

SECTION C-C

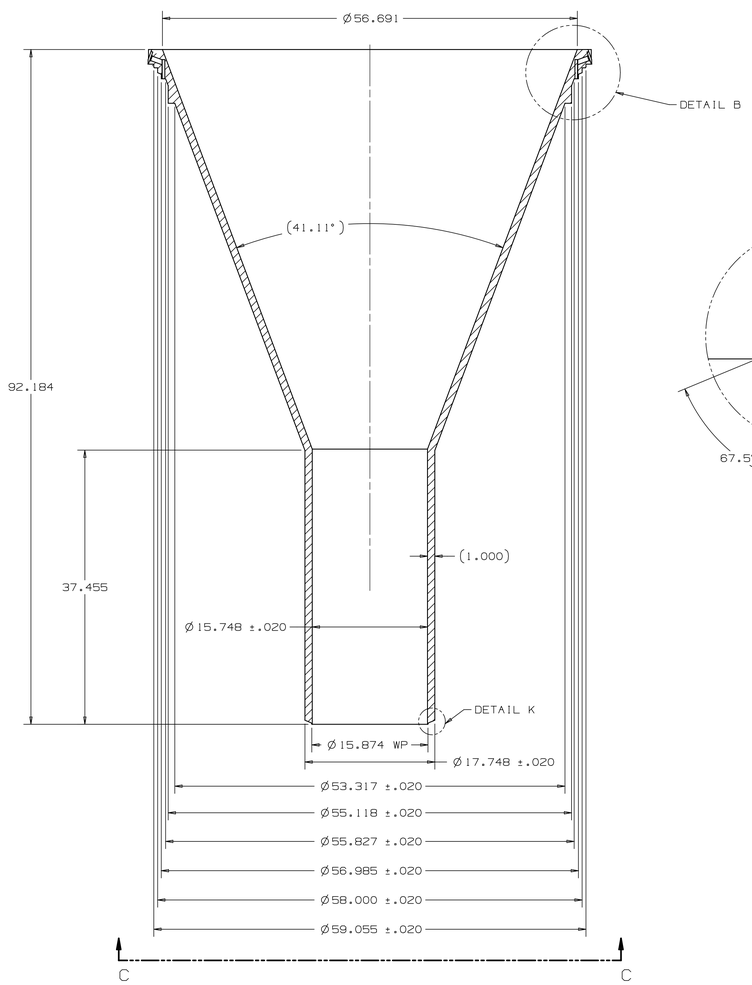

SECTION A-A

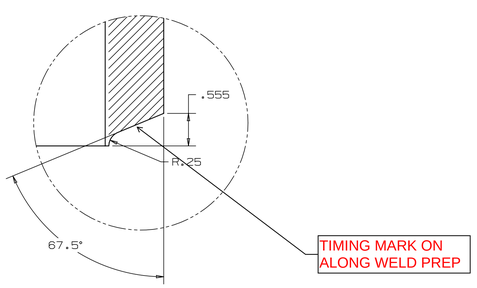

DETAIL K
SCALE 1:1

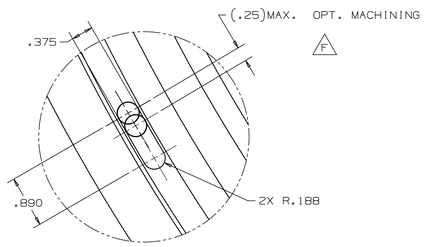

DETAIL G
SCALE 1:1
TYP 10 PLACES

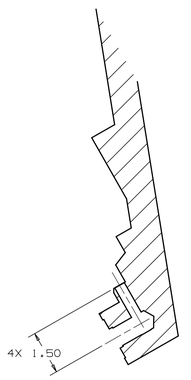

SECTION L - L
F

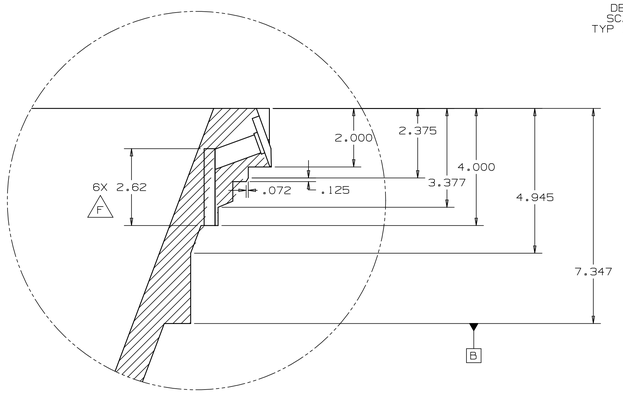

DETAIL B
SCALE 1:2

PART WEIGHT : 2,456 LBS APPROX.

UNLESS OTHERWISE SPECIFIED				
±.X	±.XX	±.XXX	±X/X	±X°
.1	.02	.020	1/16	1°

BREAK ALL SHARP EDGES .015 MAX.
DO NOT SCALE DRAWING
DIMENSIONS BASED ON ASME Y14.5-2009
MAX. ALL MACH SURFACES 125√
DRAWING UNITS: INCHES

DRAWN	K.HUNDEN	DATE	09-Aug-2017
CHECKED	D.SCHMITT	DATE	17-Aug-2017
APPROVED	D.PUSHKA	DATE	17-Aug-2017
USED ON	F10078097		
MATERIAL	SA182 F 316L STAINLESS		
GROUP: Accelerator Mechanical Support		CAGE CODE: 0U5R6	

FERMI NATIONAL ACCELERATOR LABORATORY
UNITED STATES DEPARTMENT OF ENERGY

F10078078-TIMING, REV --