DESCRIPTION: ME TARGET TO HORN 1 INTEGRATION
CATEGORY: PROJECT: NuMI Target Hall

REV	REVISION CONTROL DOCUMENT	DATES	SIGNATURES	
A	F00433995-A-RCD		DRAWN	G.WAVER
			APPROVED	

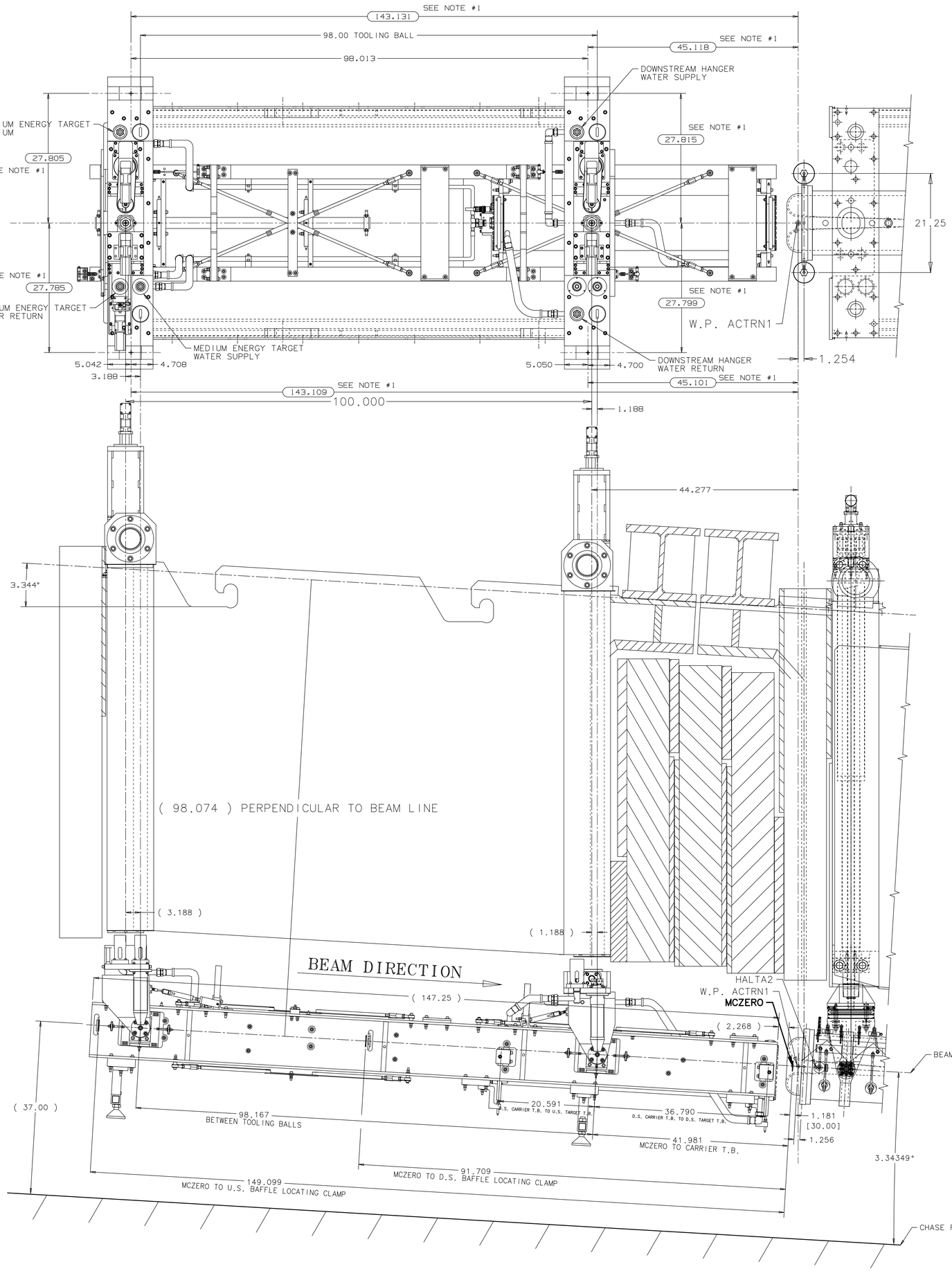

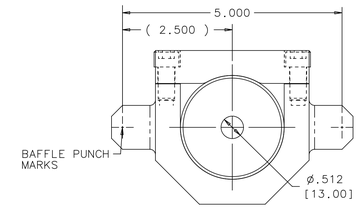

U.S. BAFFLE CLAMP
SCALE: 3/4

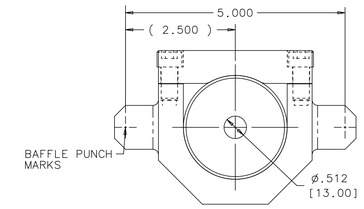

D.S. BAFFLE CLAMP
SCALE: 3/4

NOTES:

1.) DIMENSION REFLECTS AS BUILT.

Summary Target Module features and MET 10_2_2018
Local Coordinate System = Gravity
Origin = ACTRN1
X = positive beam right (Eastward) when looking downstream beamline
Y (stationing) = positive downstream beamline
Z = positive upward when looking downstream beamline (local gravity vector at ACTRN-1)
Module features and Tgt MET-03

Name	X(in)	Y(in)	Z(in)	Comments
UPRT_OUT	28.740	-145.105	119.419	module fids
UPRT_IN	26.851	-145.079	119.412	module fids
UPLT_OUT	-28.772	-145.009	119.418	module fids
UPLT_IN	-26.835	-144.951	119.420	module fids
ULNewRefHole	-27.805	-143.131	119.321	upst left 0.25 inch hole
URNewRefHole	27.785	-143.109	119.314	upst right 0.25 inch hole
DNLT_IN	-26.840	-47.077	113.701	module fids
DNLT_OUT	-28.771	-47.019	113.705	module fids
DNRT_IN	27.065	-46.907	113.682	module fids
DLNewRefHole	-27.815	-45.118	113.603	dnst left 0.25 inch hole
DRNewRefHole	27.799	-45.101	113.580	dnst right 0.25 inch hole
UpstShaftBase-Center	0.050	-144.133	118.308	upst shaft center
DnstShaftBase-Center	0.035	-44.100	112.587	dnst shaft center
TA-03_TC-03_UL	-19.447	-141.198	8.226	carrier upst left TB
TA-03_TC-03_UR	19.578	-141.143	8.194	carrier dnst left TB
TA-03_MET-03_UP	-0.045	-56.428	3.228	Tgt fin upst
TA-03_TC-03_DL	-19.561	-43.188	2.449	carrier dnst left TB
TA-03_TC-03_DR	19.501	-43.145	2.419	carrier dnst right TB
TA-03_MET-03_DN	-0.097	-9.162	0.436	Tgt fin dnst

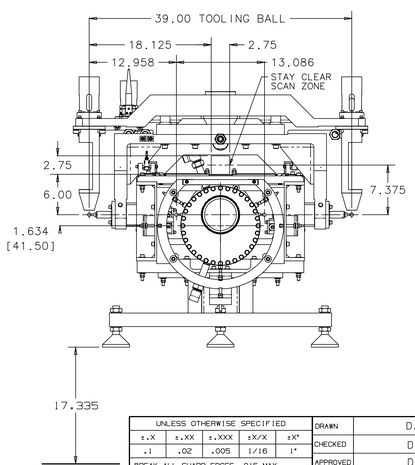

UNLESS OTHERWISE SPECIFIED				
±.X	±.XX	±.XXX	±X/X	±X°
.1	.02	.005	1/16	1°

BREAK ALL SHARP EDGES .015 MAX.
DO NOT SCALE DRAWING
DIMENSIONS BASED ON ASME Y14.5M-1994
MAX. ALL MACH SURFACES 125
DRAWING UNITS: INCHES

DRAWN	D.HURD	DATE	
CHECKED	D.HURD	DATE	
APPROVED	D.HURD	DATE	
USED ON			
MATERIAL			
GROUP:		CAGE CODE: 0U5R6	

FERMI NATIONAL ACCELERATOR LABORATORY
UNITED STATES DEPARTMENT OF ENERGY

NAME: ME TARGET TO HORN 1 INTEGRATION

SCALE	SIZE	DRAWING NUMBER	SHEET	REV
	E	F00433995	2 or 2	A