DESCRIPTION: ME TARGET TO HORN 1 INTEGRATION
CATEGORY: PROJECT: NUMITargetHall

REV	REVISION CONTROL DOCUMENT	DATES	SIGNATURES	
A	F00433995-A-RCD		DRAWN	G.WAVER
			APPROVED	

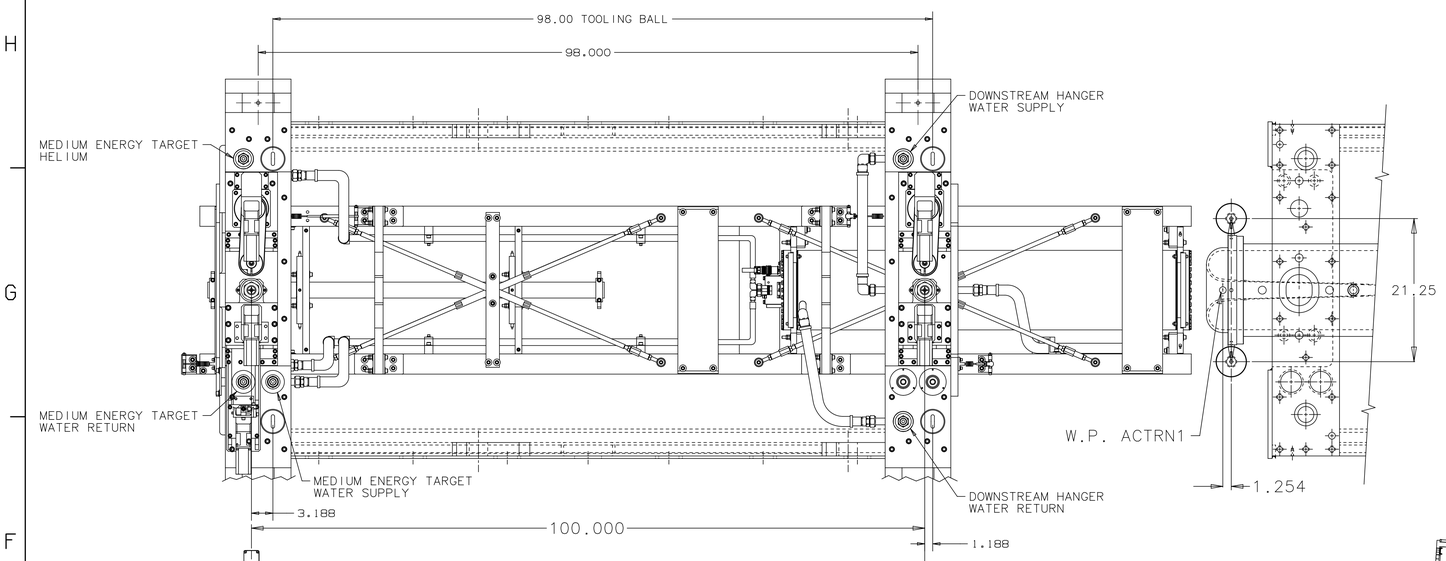

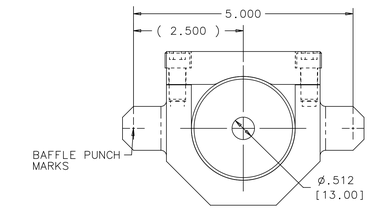

U.S. BAFFLE CLAMP
SCALE: 3/4

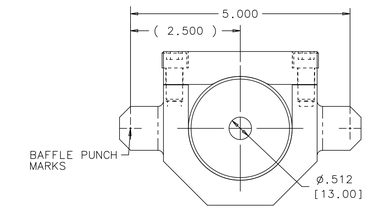

D.S. BAFFLE CLAMP
SCALE: 3/4

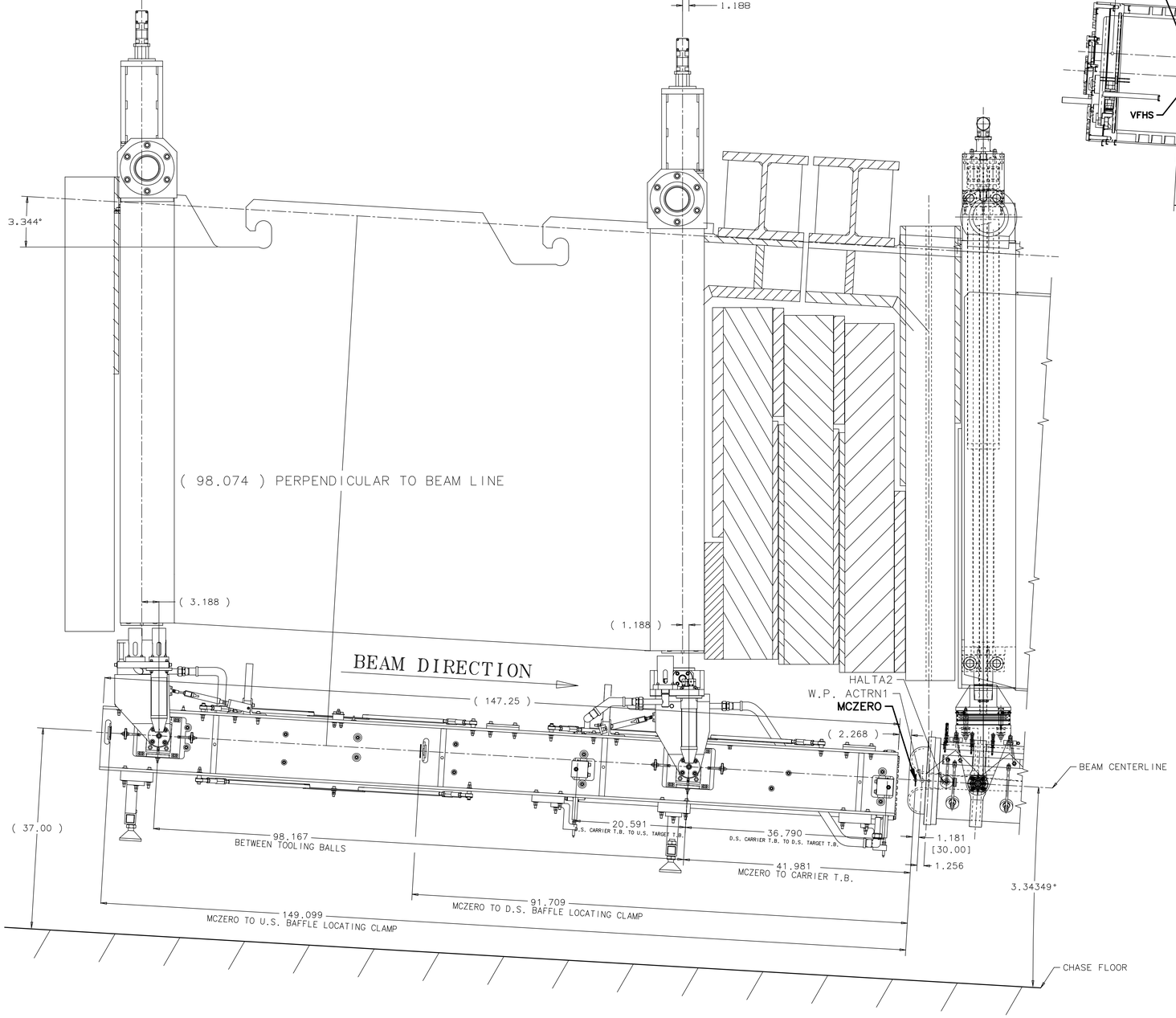

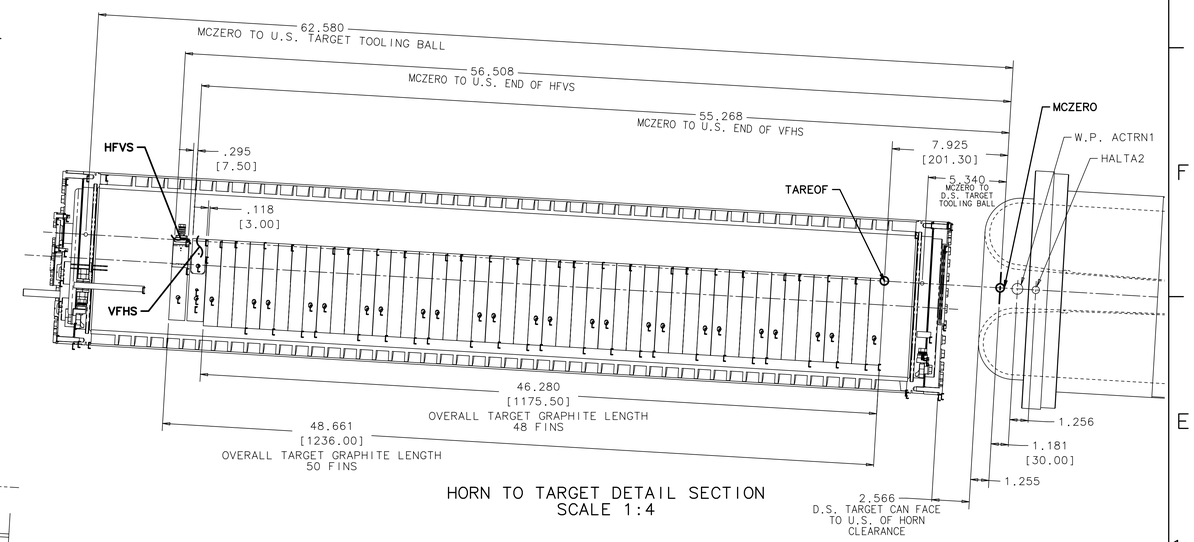

HORN TO TARGET DETAIL SECTION
SCALE 1:4

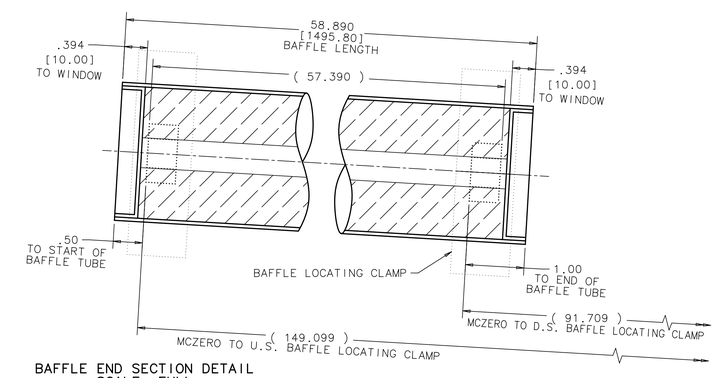

BAFFLE END SECTION DETAIL
SCALE: FULL

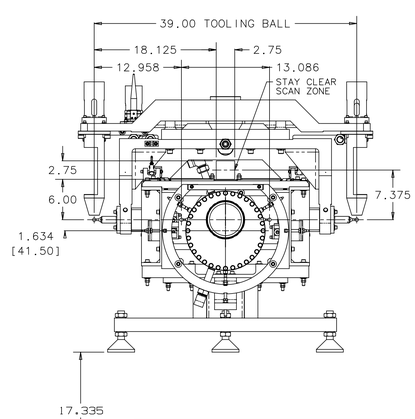

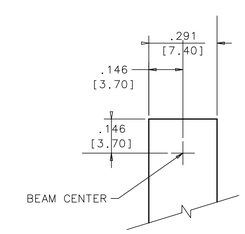

TARGET GRAPHITE BEAM POSITION DETAIL
SCALE: 4:1

UNLESS OTHERWISE SPECIFIED				
±.X	±.XX	±.XXX	±X/X	±X°
.1	.02	.005	1/16	1°

BREAK ALL SHARP EDGES .015 MAX.
DO NOT SCALE DRAWING
DIMENSIONS BASED ON ASME Y14.5M-1994
MAX. ALL MACH SURFACES 125
DRAWING UNITS: INCHES

DRAWN	D.HURD	DATE	
CHECKED	D.HURD	DATE	
APPROVED	D.HURD	DATE	
USED ON			
MATERIAL			
GROUP:		CAGE CODE: 0U5R6	

FERMI NATIONAL ACCELERATOR LABORATORY
UNITED STATES DEPARTMENT OF ENERGY

NAME: ME TARGET TO HORN 1 INTEGRATION

SCALE	SIZE	DRAWING NUMBER	SHEET	REV
	E	F00433995	1 of 2	A