REV	DESCRIPTION	DRAWN	DATE
		APPROVED	DATE
A	UPDATED	G SMITH	12-JAN-2007
		G SMITH	17-JAN-2007

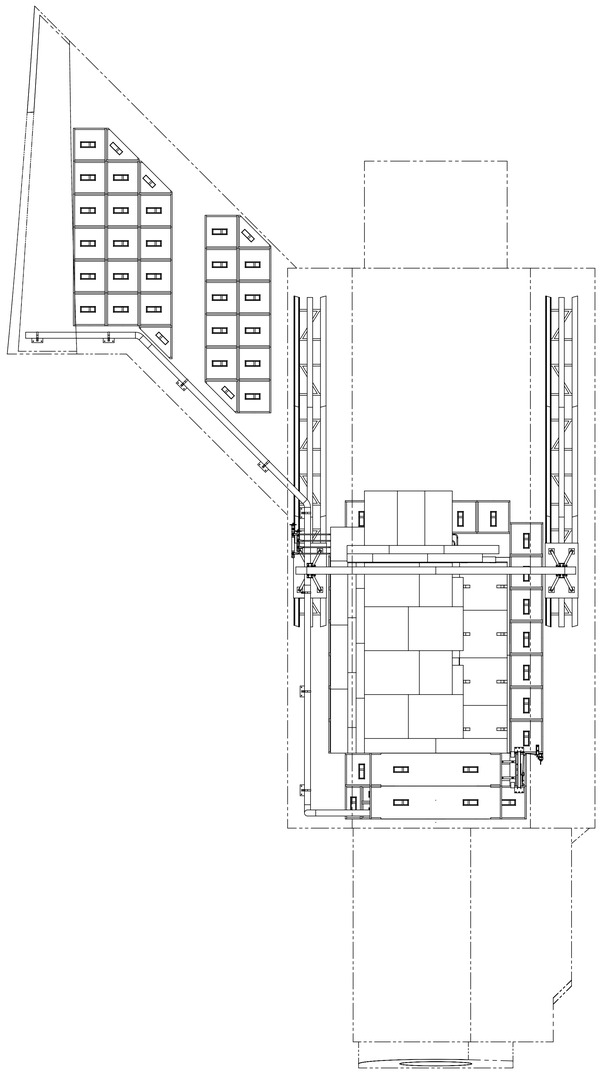

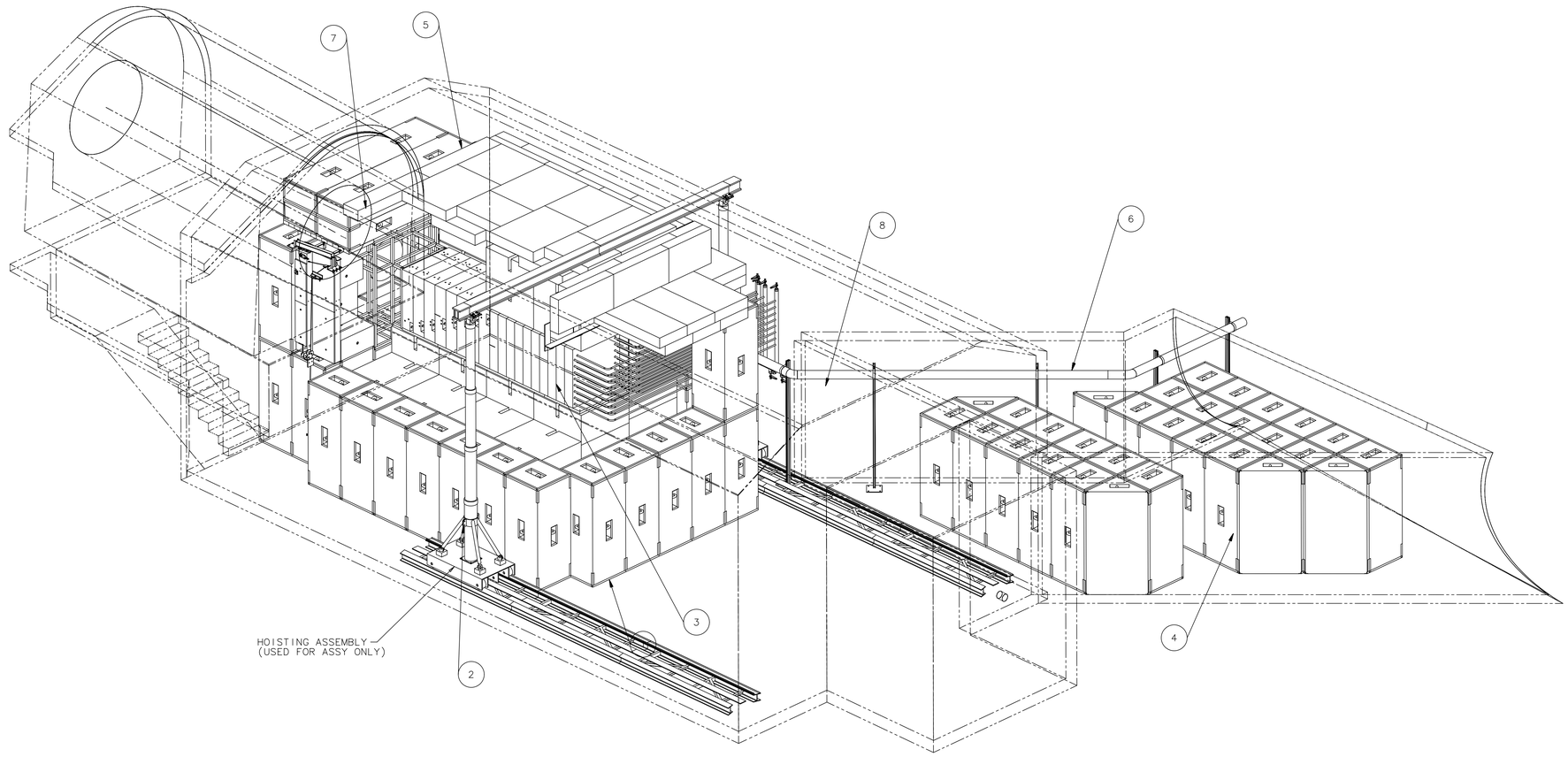

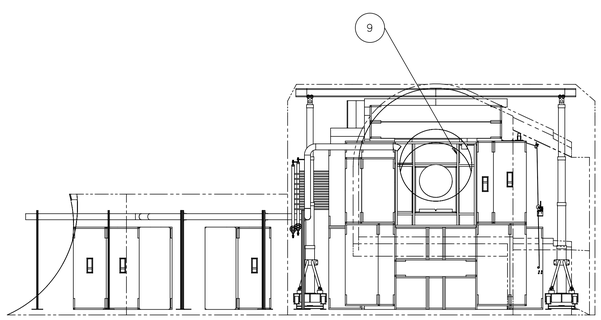

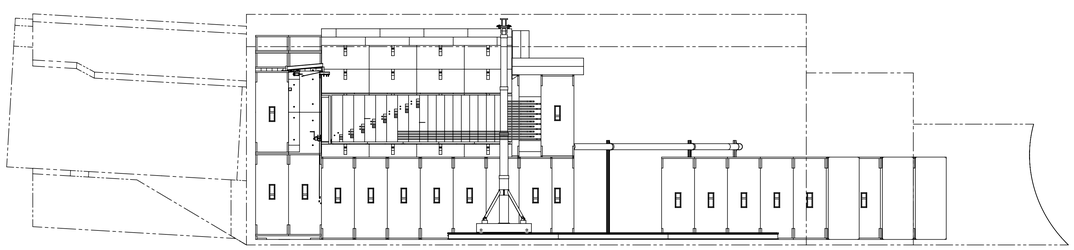

ITEM	PART NO.	DESCRIPTION OR SIZE	QTY.
9	ME-433147	AIR DISPLACEMENT BOX FRAME	1
8	ME-406347	DECAY PIPE COOLING TUBE ROUTING	1
7	ME-406886	DECAY PIPE EXT INSTALL ASSY D.S.	1
6	ME-406519	CORE COOLING ASSEMBLY	1
5	ME-431220	VACUUM PUMP OUT ASSY	1
4	ME-427	ABSORBER CAVERN PASSAGEWAY SHIELDING ASSY	1
3	ME-427127	CORE WELDMENT ASSY	1
2	ME-427337	STEEL SHIELDING ASSY	1
1	ME-427334	CONCRETE SHIELDING ASSY	1

PARTS LIST

UNLESS OTHERWISE SPECIFIED			ORIGINATOR	E.VILLEGAS	13-MAR-2003
.XX	.XXX	ANGLES	DRAWN	G.SMITH	13-MAR-2003
±	±	± 1°	CHECKED		
			APPROVED		

1. BREAK ALL SHARP EDGES .015 MAX.
2. DO NOT SCALE DRAWING.
3. DIMENSIONS BASED UPON ANSI Y14.5M-1982
4. ALL DIMENSIONS ARE INCHES
5. MAX. ALL MACH. SURFACES 125

USED ON: NUMI BEAMLINE

MATERIAL: SEE PARTS LIST ABOVE

FERMI NATIONAL ACCELERATOR LABORATORY
UNITED STATES DEPARTMENT OF ENERGY

PPD/MECHANICAL DEPT.
NUMI HADRON BEAM ABSORBER
ABSORBER CAVERN GENERAL LAYOUT

SCALE	DRAWING NUMBER	SHEET	REV
1/64 & NOTED	8875.114-ME-427776	1 OF 1	

CREATED WITH : ideas9m3 GROUP: PPD/MECHANICAL DEPARTMENT

REV	DESCRIPTION	DRAWN	DATE
		APPROVED	DATE
A	UPDATED	G SMITH	12-JAN-2007
		G SMITH	17-JAN-2007

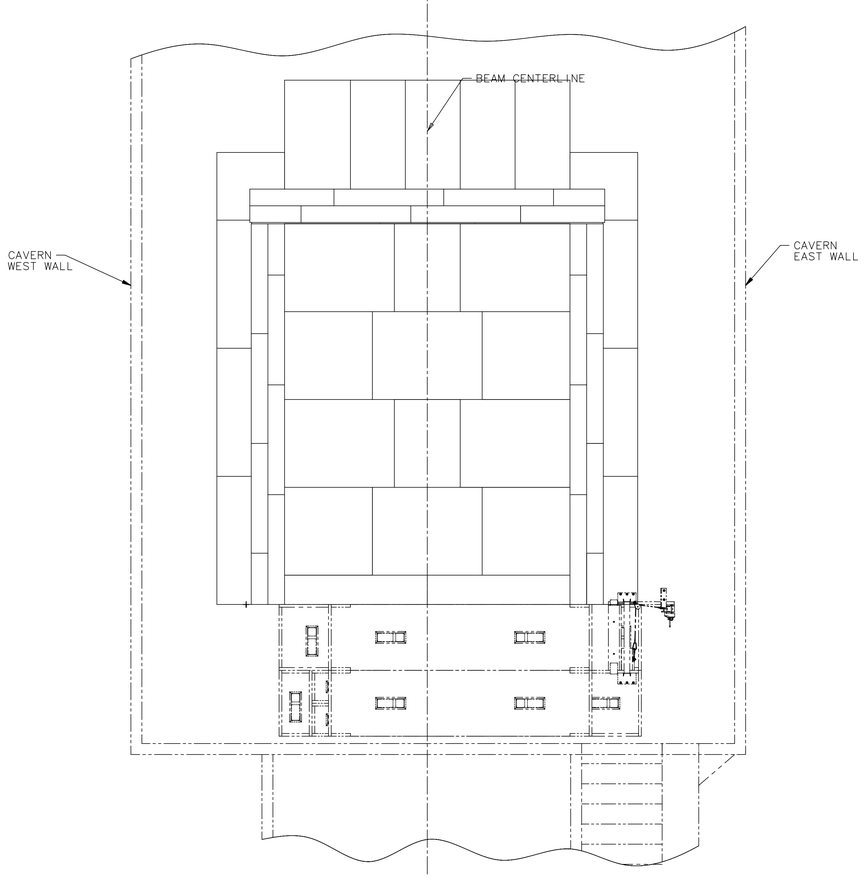

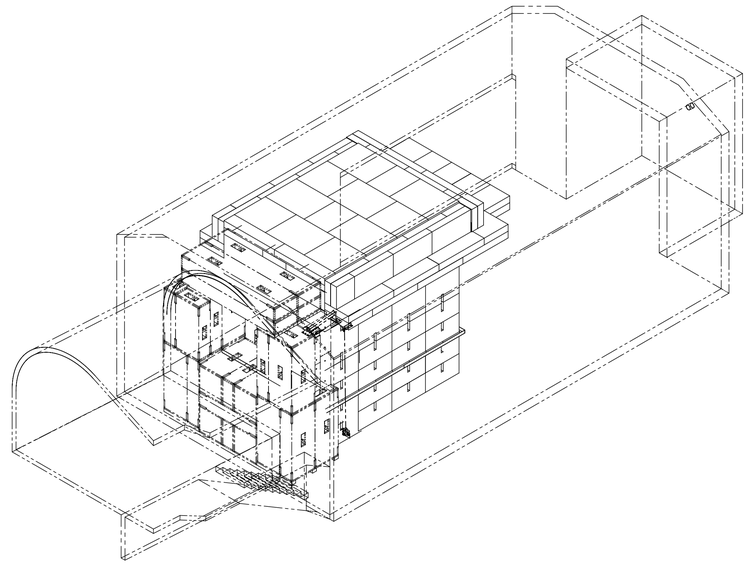

ISOMETRIC VIEW
SCALE=1:1/32

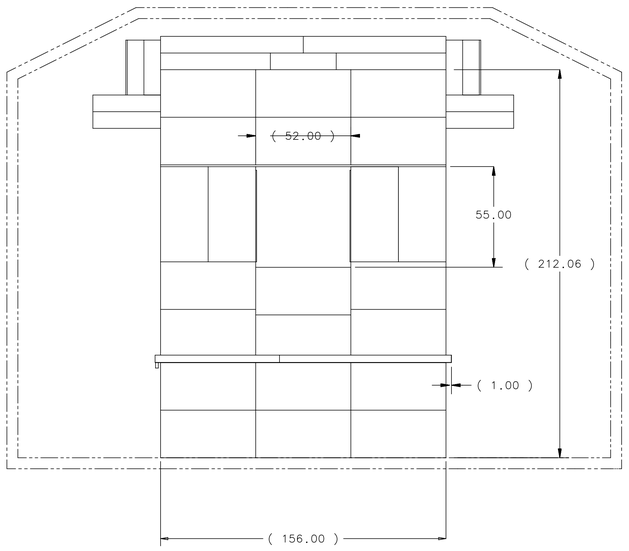

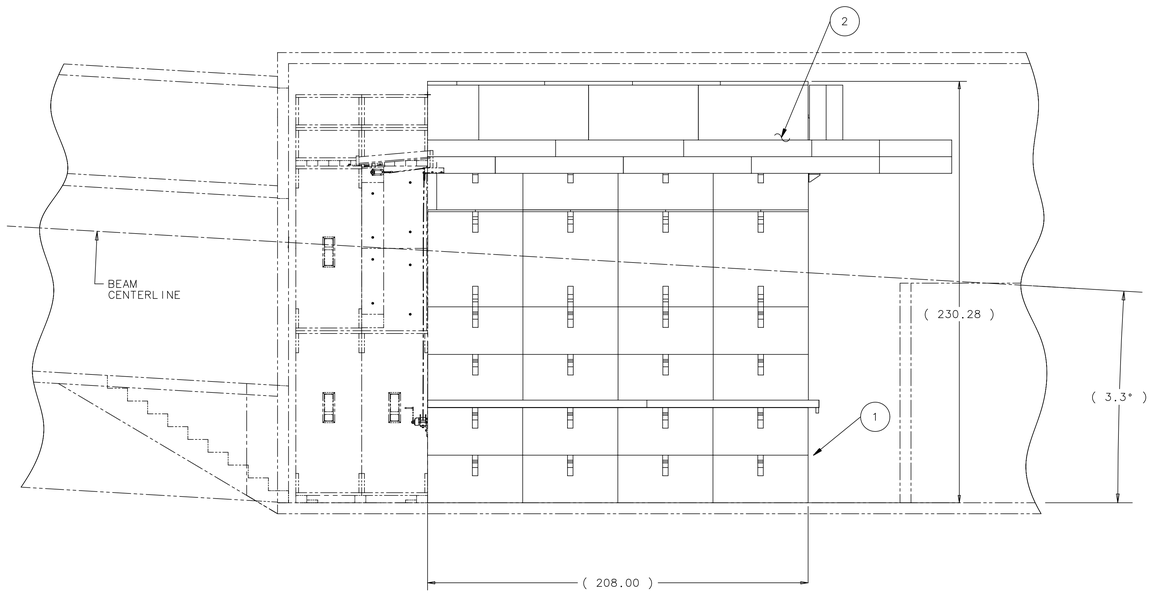

BEAM DIRECTION

WGT:994.5 TONS

ITEM	PART NO.	DESCRIPTION OR SIZE	QTY.
2	MD-427379	STEEL SHIELDING ASS'Y.,TOP	1
1	ME-427376	STEEL SHIELDING ASS'Y.,BOTTOM	1

PARTS LIST

UNLESS OTHERWISE SPECIFIED			ORIGINATOR	E.VILLEGAS	07-NOV-2002
.XX	.XXX	ANGLES	DRAWN	R.WILLIAMS	07-NOV-2002
± .06	± --	± --	CHECKED	C.GRIMM	18-DEC-2003
			APPROVED	E.VILLEGAS	19-DEC-2003

1. BREAK ALL SHARP EDGES .015 MAX.
2. DO NOT SCALE DRAWING.
3. DIMENSIONS BASED UPON ASME Y14.5M-1994
4. MAX. ALL MACH. SURFACES 125
5. DRAWING UNITS:U.S.INCH

USED ON: ME-427776

MATERIAL: SEE PARTS LIST ABOVE

FERMI NATIONAL ACCELERATOR LABORATORY
UNITED STATES DEPARTMENT OF ENERGY

PPD/MECHANICAL DEPT.
NUMI HADRON BEAM ABSORBER
STEEL SHIELDING ASS'Y.

SCALE	DRAWING NUMBER	SHEET	REV
1/32 & NOTED	8875.114-ME-427337	1 OF 1	A

CREATED WITH : Ideas12NXSeries | GROUP: PPD/MECHANICAL DEPARTMENT

REV	DESCRIPTION	DRAWN	DATE
		APPROVED	DATE

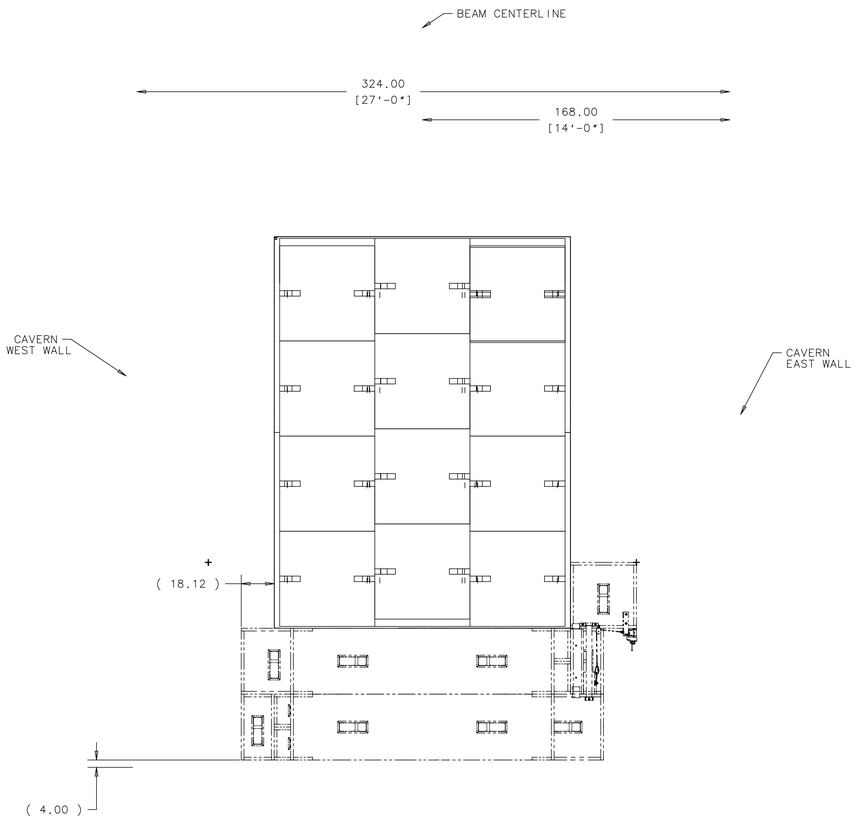

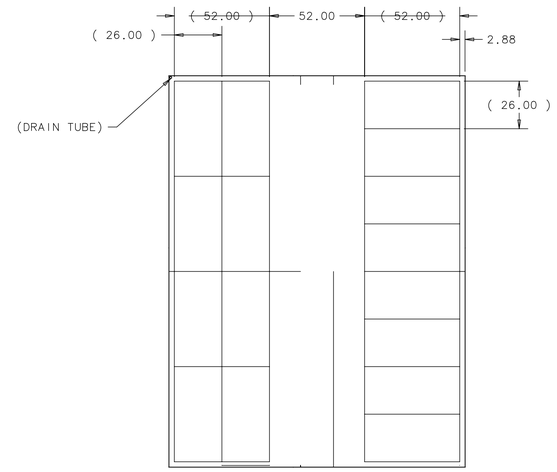

VIEW A-A
SCALE=1:1/32

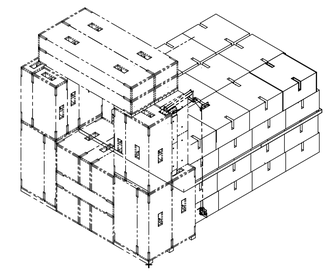

ISOMETRIC VIEW
SCALE=1:1/64

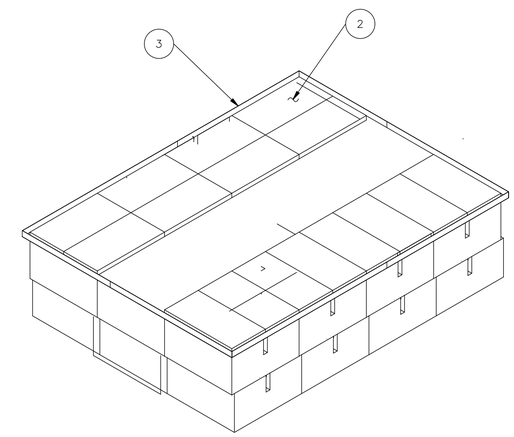

VIEW A-A(ISOMETRIC)
SCALE=1:1/32

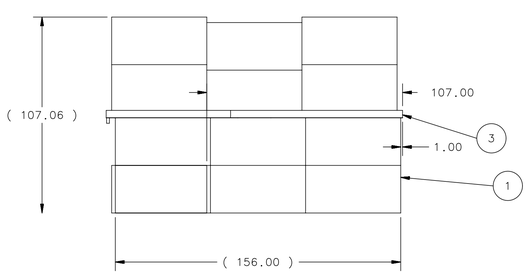

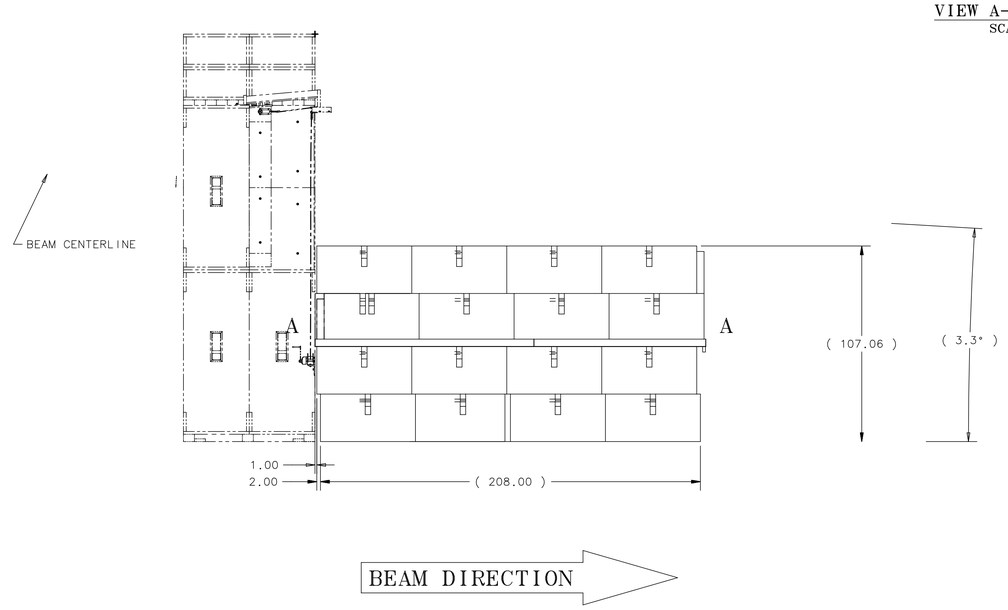

WGT:558.5 TONS

3	MD-427383	RADIATED WATER TROUGH WELDMENT ASSY	1
2	CGML	SPACER 3X26X62-A36 STEEL	16
1	CGML	S2 SHIELD BLOCK 10 TON STD 17-025 STEEL	48

UNLESS OTHERWISE SPECIFIED			ORIGINATOR	E.VILLEGAS	18-NOV-2002
.XX	.XXX	ANGLES	DRAWN	R.WILLIAMS	18-NOV-2002
± .06	± --	± --	CHECKED	C.GRIMM	18-DEC-2003
			APPROVED	E.VILLEGAS	19-DEC-2003

1. BREAK ALL SHARP EDGES .015 MAX.
2. DO NOT SCALE DRAWING.
3. DIMENSIONS BASED UPON ASME Y14.5M-1994
4. MAX. ALL MACH. SURFACES 125

USED ON: ME-427337

MATERIAL: SEE PARTS LIST ABOVE

FERMI NATIONAL ACCELERATOR LABORATORY
UNITED STATES DEPARTMENT OF ENERGY

PPD/MECHANICAL DEPT.
NUMI HADRON BEAM ABSORBER
STEEL SHIELDING ASSY BOTTOM

SCALE	DRAWING NUMBER	SHEET	REV
1/32 & NOTED	8875.114-ME-427376	1 OF 1	

CREATED WITH : Ideas9m3 GROUP: PPD/MECHANICAL DEPARTMENT

REV	DESCRIPTION	DRAWN	DATE
		APPROVED	DATE

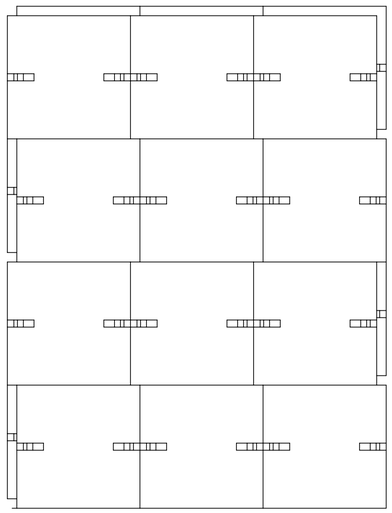

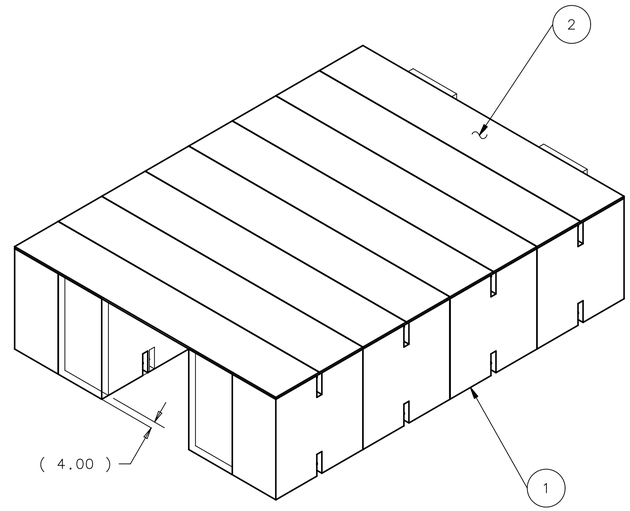

VIEW A-A (ISOMETRIC)
SCALE=1:1/32

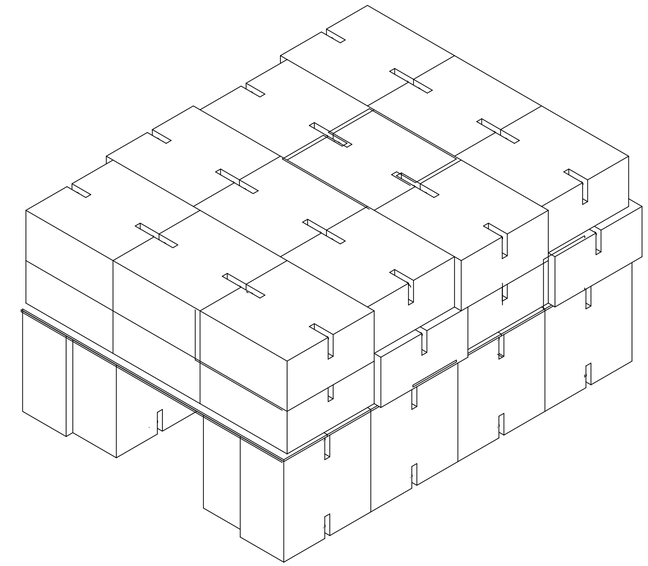

ISOMETRIC VIEW
SCALE=1:1/32

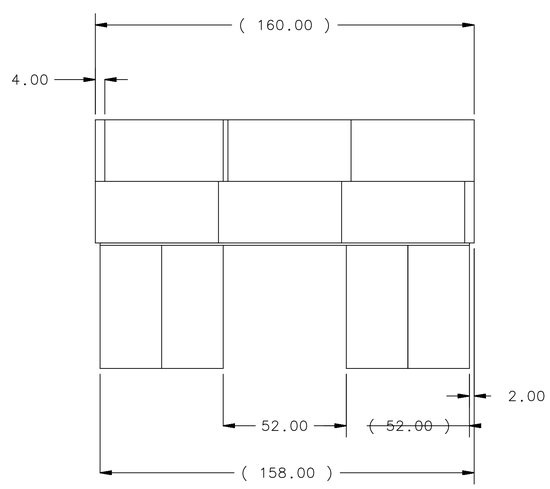

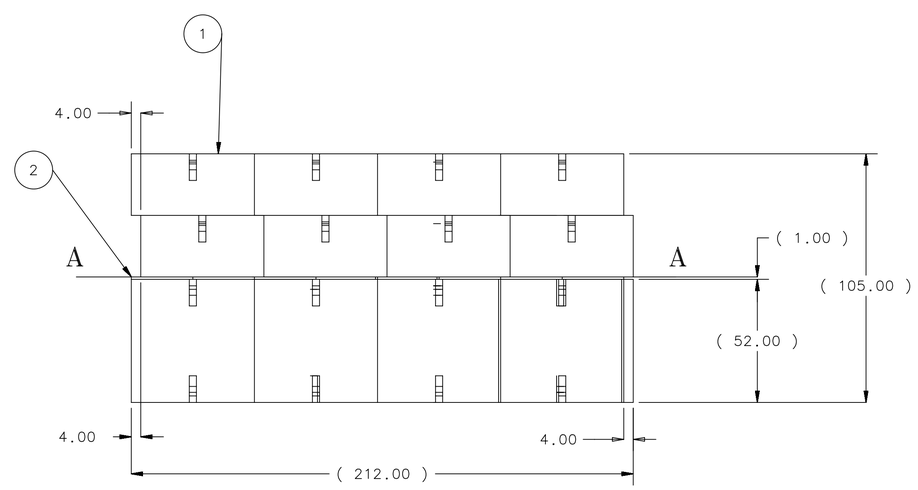

BEAM DIRECTION

WGT:436 TONS

ITEM	PART NO.	DESCRIPTION OR SIZE	QTY.
2	CGML	1X26X156 LG. PLATE-A36 STEEL	8
1	CGML	S2 SHIELD BLOCK 10 TON STD 17-025 STEEL	40

PARTS LIST

UNLESS OTHERWISE SPECIFIED					
.XX	.XXX	ANGLES	ORIGINATOR	E.VILLEGAS	18-NOV-2002
± .06	± --	± --	DRAWN	R.WILLIAMS	18-NOV-2002
			CHECKED	C.GRIMM	18-DEC-2003
			APPROVED	E.VILLEGAS	19-DEC-2003

1. BREAK ALL SHARP EDGES .015 MAX.
2. DO NOT SCALE DRAWING.
3. DIMENSIONS BASED UPON ASME Y14.5M-1994
4. ALL DIMENSIONS ARE INCHES
5. MAX. ALL MACH. SURFACES 125

USED ON: ME-427337

MATERIAL: SEE PARTS LIST ABOVE

FERMI NATIONAL ACCELERATOR LABORATORY
UNITED STATES DEPARTMENT OF ENERGY

PPD/MECHANICAL DEPT.
NUMI HADRON BEAM ABSORBER
STEEL SHIELDING ASS'Y. TOP

SCALE	DRAWING NUMBER	SHEET	REV
1/32	8875.114-MD-427379	1 OF 1	

CREATED WITH : Ideas9m3 | GROUP: PPD/MECHANICAL DEPARTMENT