REV	DESCRIPTION	DRAWN	DATE
		APPROVED	DATE
A	TUBING LAYOUT MODIFIED	G SMITH	1/28/03
		GRIMM/E.M.VILLEGAS	11-MAR-2004

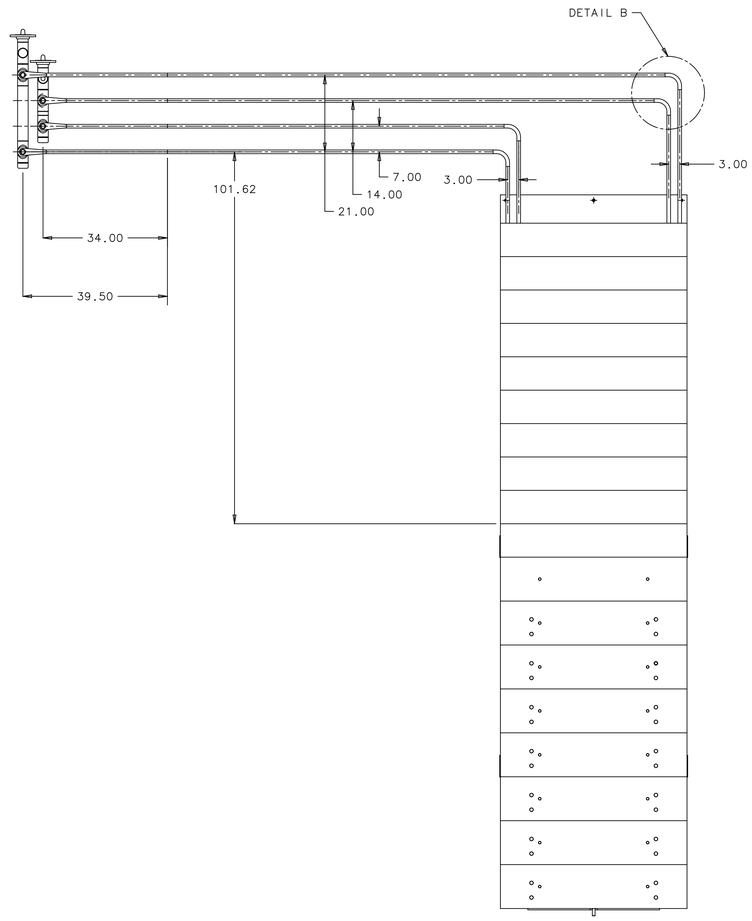

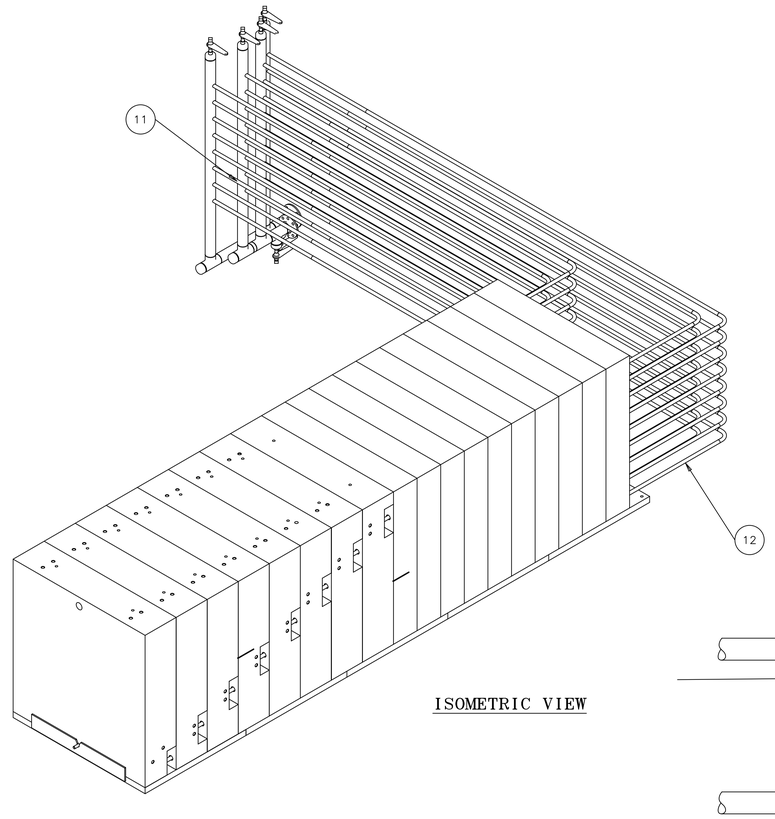

ISOMETRIC VIEW

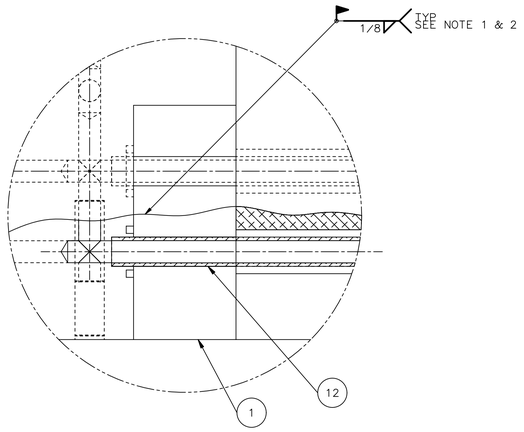

DETAIL A

SCALE:1/2

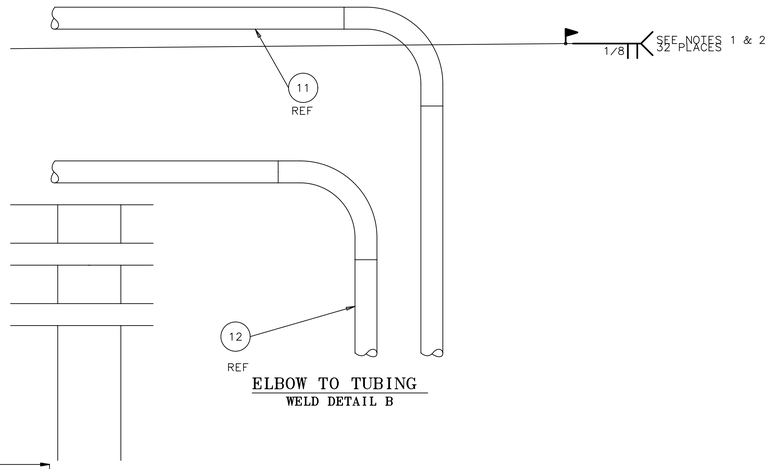

ELBOW TO TUBING

WELD DETAIL B

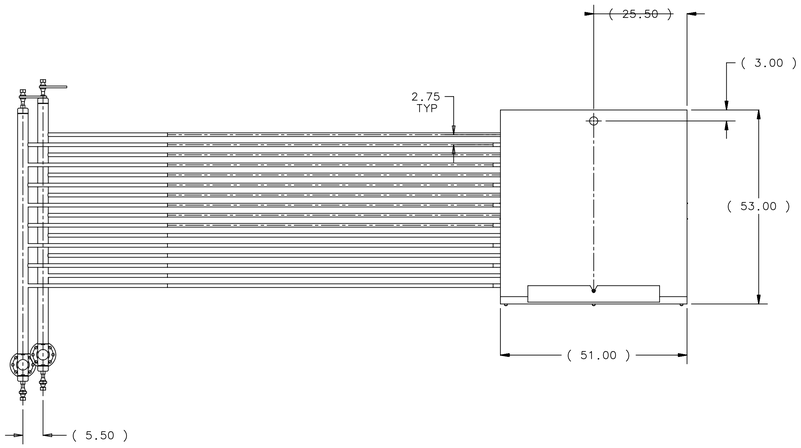

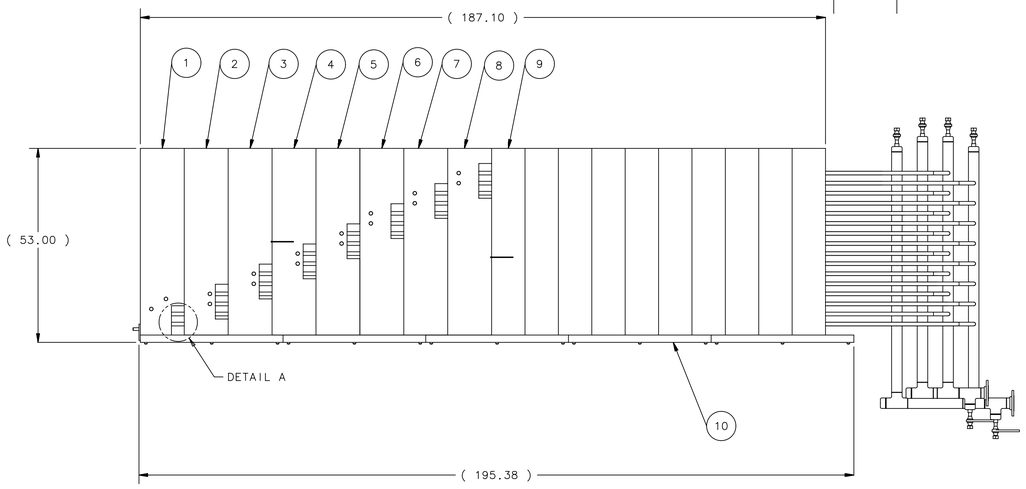

ITEM	PART NO.	DESCRIPTION OR SIZE	QTY.
12	MD-431701	CORE TUBING ASSEMBLY	1
11	ME-431708	CORE COOLING ASSEMBLY	1
10	MD-427159	CORE SUPPORT ASSY	1
9	MD-427154	CORE BACK+SHIELDING	10
8	MD-427624	CORE ALUMINUM MODULE #8	1
7	MD-427623	CORE ALUMINUM MODULE #7	1
6	MD-427141	CORE ALUMINUM MODULE #6	1
5	MD-427140	CORE ALUMINUM MODULE #5	1
4	MD-427139	CORE ALUMINUM MODULE #4	1
3	MD-427138	CORE ALUMINUM MODULE #3	1
2	MD-427137	CORE ALUMINUM MODULE #2	1
1	MD-427136	CORE ALUMINUM MODULE #1	1

PARTS LIST

UNLESS OTHERWISE SPECIFIED			ORIGINATOR	E.VILLEGAS	24-SEP-2002
.XX	.XXX	ANGLES	DRAWN	R.WILLIAMS	24-SEP-2002
± .06	± --	± ---	CHECKED	W.CYKO	16-APR-2003
			APPROVED	E.VILLEGAS	16-APR-2003

1. BREAK ALL SHARP EDGES .015 MAX.
2. DO NOT SCALE DRAWING.
3. DIMENSIONS BASED UPON ASME Y14.5M-1994
4. MAX. ALL MACH. SURFACES 250
5. DRAWING UNITS:U.S.INCH

USED ON: ME-427776

MATERIAL: SEE PARTS LIST ABOVE

FERMI NATIONAL ACCELERATOR LABORATORY
UNITED STATES DEPARTMENT OF ENERGY

PPD/MECHANICAL DEPARTMENT
NUMI HADRON BEAM ABSORBER
CORE ASSEMBLY

SCALE	DRAWING NUMBER	SHEET	REV
1/16 & AS NOTED	8875.114-ME-427127	1 OF 1	A

CREATED WITH : Ideas9m3 GROUP: PPD/MECHANICAL DEPARTMENT

NOTES

1. USE 5154 WELDING ROD OR EQUIV.
2. PRESSURE TEST AT 80 PSI AND CHECK FOR LEAKS AFTER WELDING.

WGT:47.5 TONS

REV	DESCRIPTION	DRAWN	DATE
		APPROVED	DATE
A	(2) LIFTING HOLES ADDED	G SMITH	1/22/04
		E.M.V	1/22/04

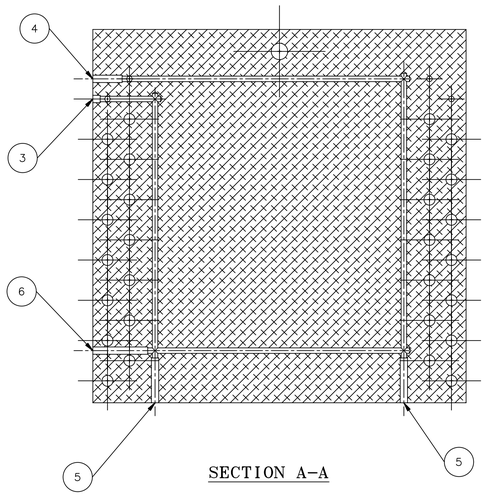

SECTION A-A

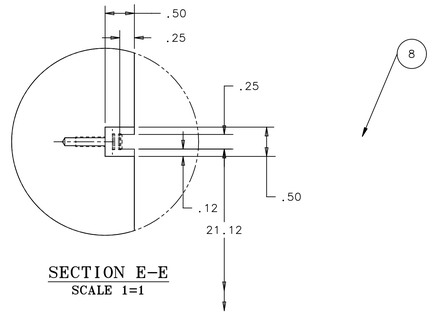

SECTION E-E
SCALE 1=1

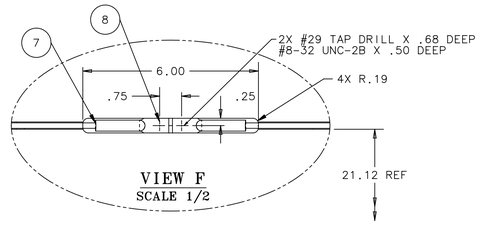

VIEW F
SCALE 1/2

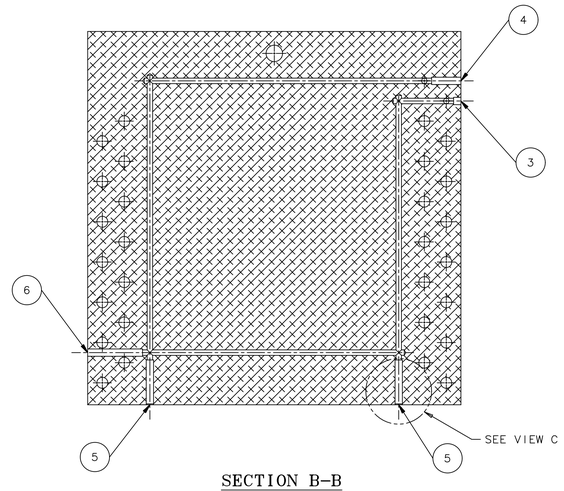

SECTION B-B

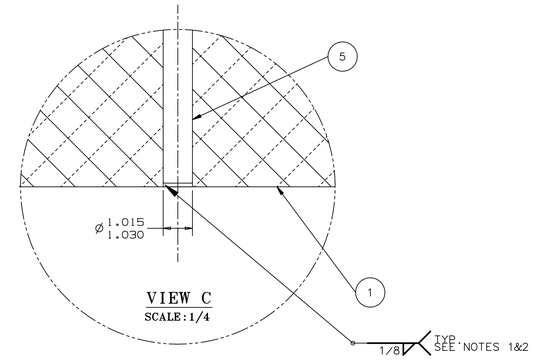

VIEW C
SCALE:1/4

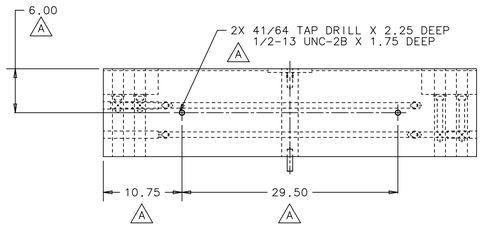

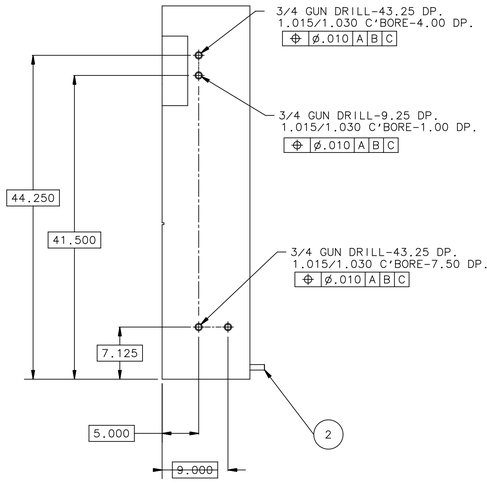

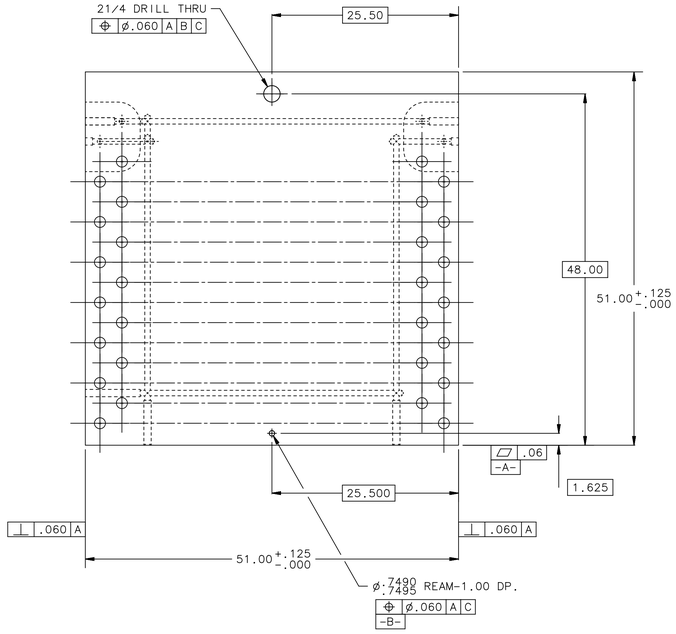

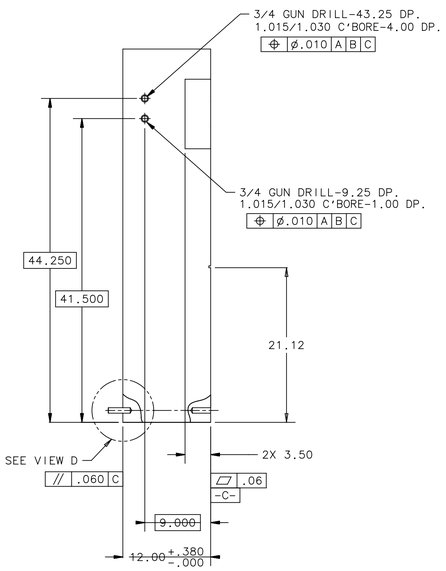

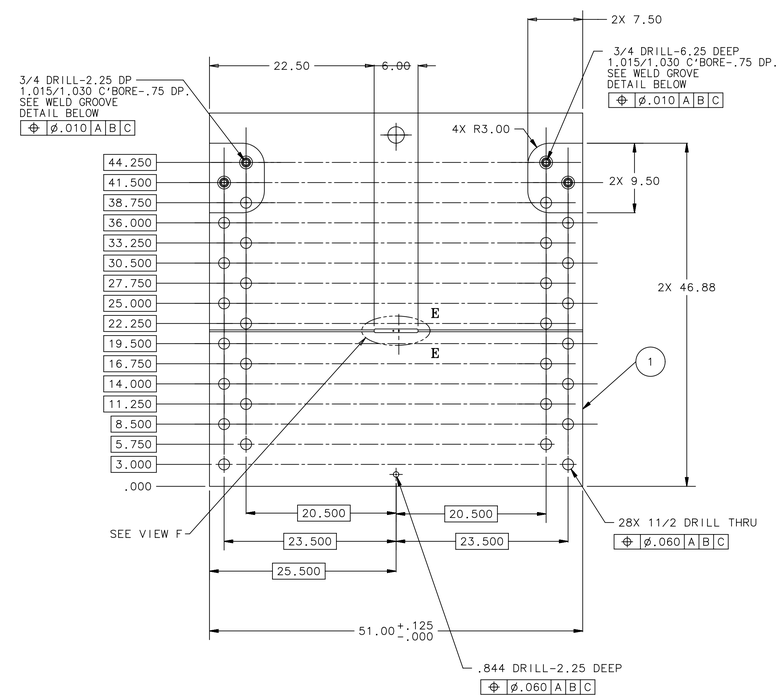

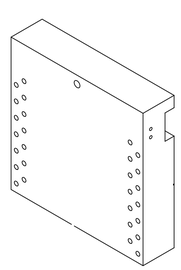

SCALE:1/16

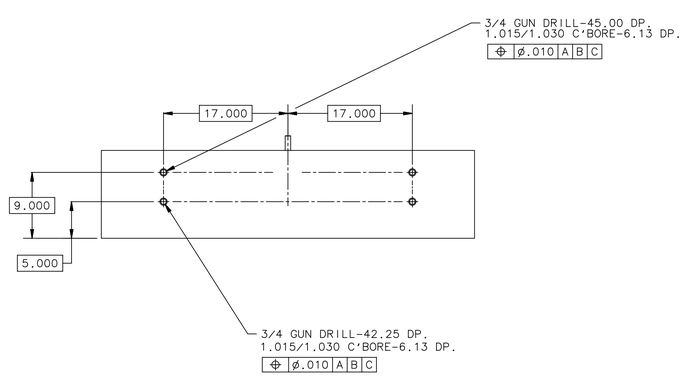

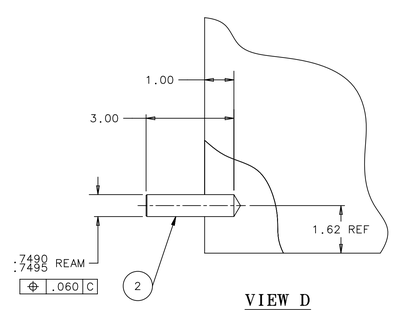

VIEW D
SCALE:1/2

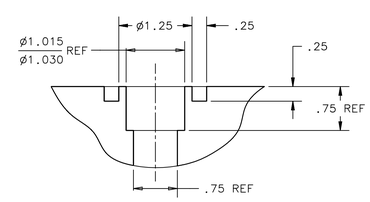

WELD GROOVE DETAIL
SCALE:1/1

NOTES

1. USE 5154 WELDING ROD OR EQUIV.
2. PRESSURE TEST AT 80 PSI AND CHECK FOR LEAKS AFTER WELDING.

WGT:2932.6 LBS.

ITEM	PART NO.	DESCRIPTION OR SIZE	QTY.
8	COML	SOCKET HD.SCREW #8-32 UNC-2A X 1/2" LG.	2
7	COML	OMEGA THERMOCOUPLE #XCIB-4-3-10	2
6	COML	PLUG - ALUM. 6061-T6511 1.00 X 7.38 LG.	2
5	COML	PLUG - ALUM. 6061-T6511 1.00 X 8.00 LG.	4
4	COML	PLUG - ALUM. 6061-T6511 1.00 X 3.88 LG.	2
3	COML	PLUG - ALUM. 6061-T6511 1.00 X 7.88 LG.	2
2	COML	LOCATING DOWEL PIN 3/4ø X 3.00 LG.-STEEL	4
1	COML	ALUM 6061-T6 HEAVY PLATE #8	1

PARTS LIST

UNLESS OTHERWISE SPECIFIED			ORIGINATOR	E.VILLEGAS	03-FEB-2003
.XX	.XXX	ANGLES	DRAWN	G.SMITH	03-FEB-2003
± .03	± .010	± ---	CHECKED	W.CYKO	16-APR-2003
			APPROVED	E.VILLEGAS	16-APR-2003

1. BREAK ALL SHARP EDGES .015 MAX.
2. DO NOT SCALE DRAWING.
3. DIMENSIONS BASED UPON ANSI Y14.5M-1982
4. ALL DIMENSIONS ARE INCHES
5. MAX. ALL MACH. SURFACES 125

USED ON: ME-427127

MATERIAL: 12.00 X 51.00 X 51.00 6061-T651,T6 ALUM

FERMI NATIONAL ACCELERATOR LABORATORY
UNITED STATES DEPARTMENT OF ENERGY

PPD/MECHANICAL DEPARTMENT
NUMI HADRON BEAM ABSORBER
CORE ALUM MODULE ASSY NO.8

SCALE	DRAWING NUMBER	SHEET	REV
1/8 & NOTED	8875.114-ME-427624	1 OF 1	

CREATED WITH : Ideas11NXSeries | GROUP: PPD/MECHANICAL DEPARTMENT

REV	DESCRIPTION	DRAWN	DATE
		APPROVED	DATE
A	(2) LIFTING HOLES ADDED	G SMITH	1/22/04
		E.M.V	1/22/04

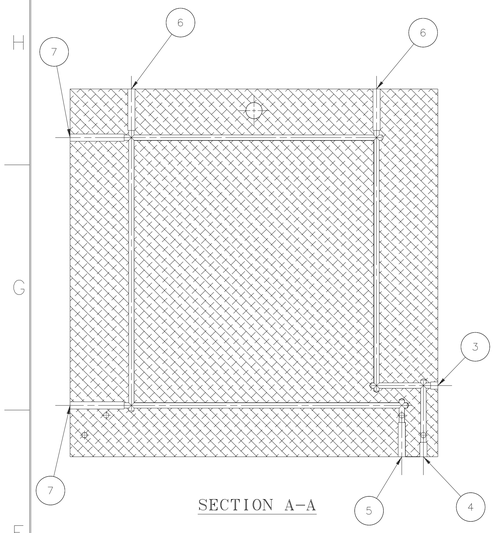

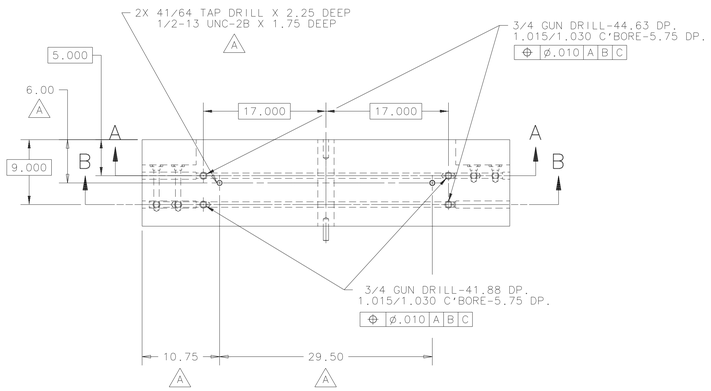

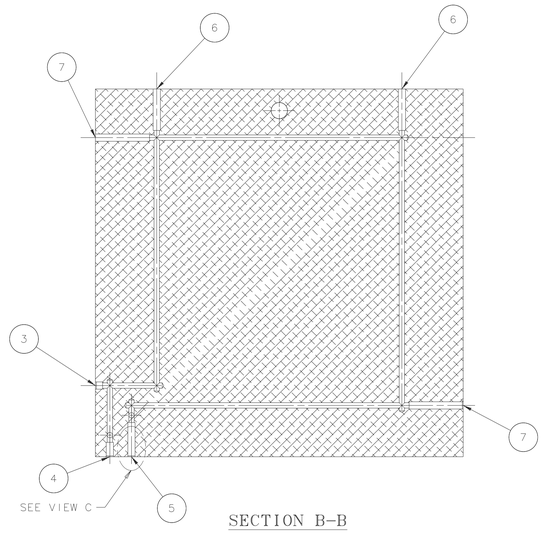

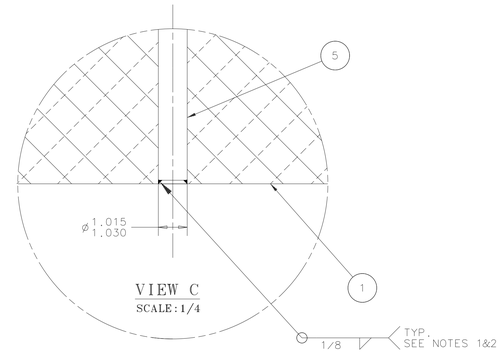

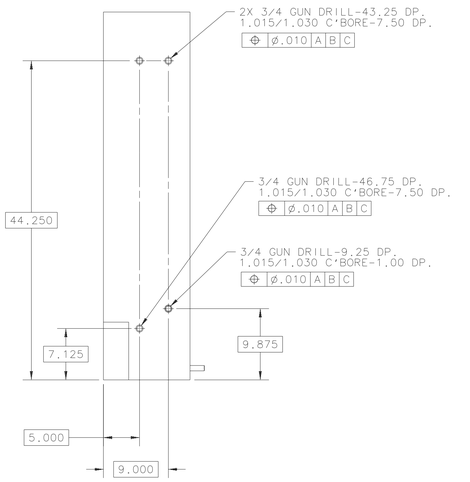

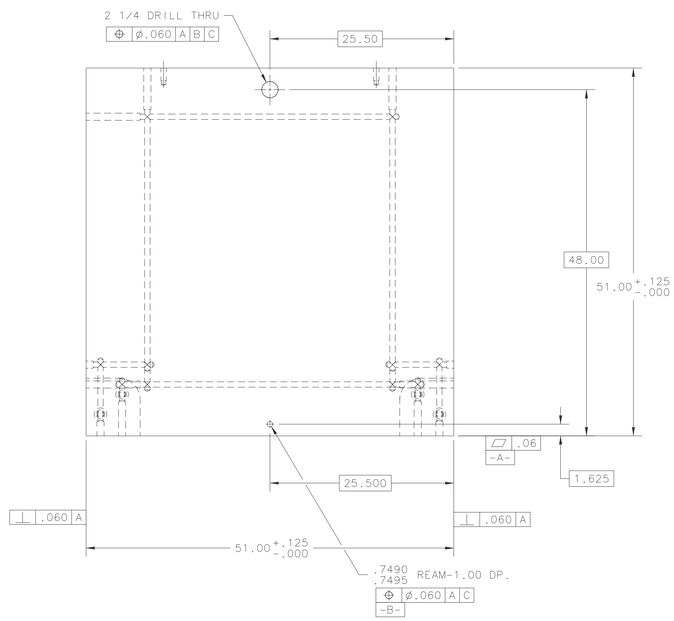

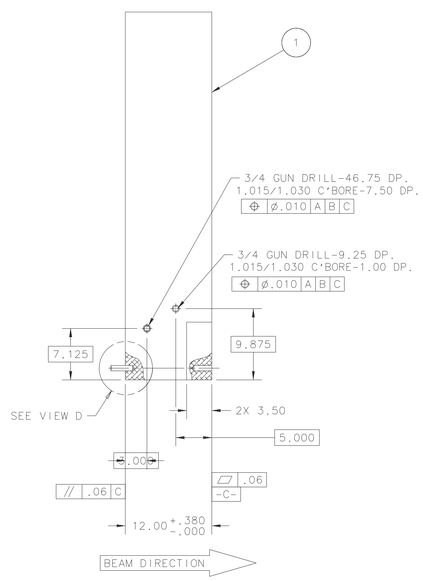

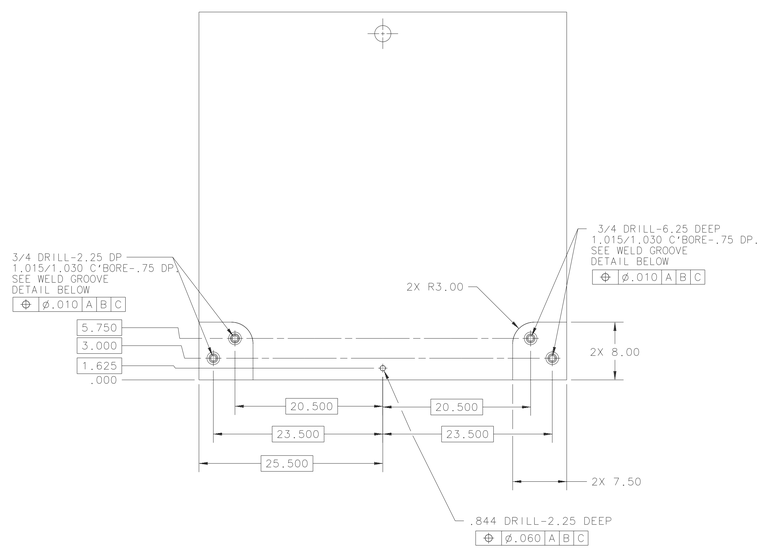

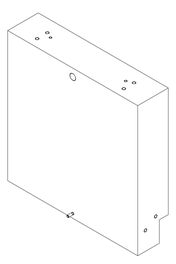

SCALE:1/16

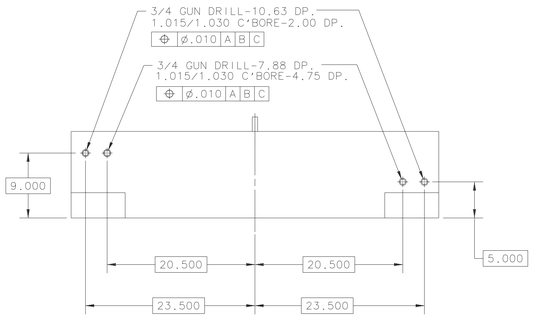

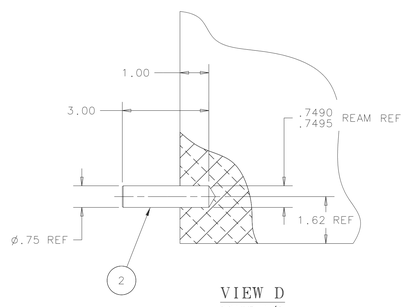

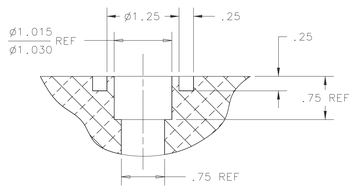

NOTES

1. USE 515
2. PRESSURE TEST AT 80 PSI AND
CHECK FOR LEAKS AFTER WELDING

NOTICE: IMAGE OBTAINED FROM FERMILAB WEB SITE
This information is provided for REFERENCE use only.
Not for MANUFACTURE, or DESIGN INFORMATION.
All information contained in this document represents
work sponsored by an agency of the U.S. Government.
Neither the U.S. Government nor any agency thereof,
nor Universities Research Association, Inc., nor any of
their employees or officers, makes any warranty, express
or implied, or assumes any legal liability or
responsibility for the accuracy, completeness, or
usefulness of any information, apparatus, product or
process disclosed, or represents that its use would not
infringe privately owned rights.

ITEM	PART NO.	DESCRIPTION OR SIZE	QTY.
7	COML	PLUG - ALUM, 6061-T6511 1.00 X 7.38 LG.	4
6	COML	PLUG - ALUM, 6061-T6511 1.00 X 5.63	4
5	COML	PLUG - ALUM, 6061-T6511 1.00 X 4.63	2
4	COML	PLUG - ALUM, 6061-T6511 1.00 X 1.88 LG.	2
3	COML	PLUG - ALUM, 6061-T6511 1.00 X .88 LG.	2
2	COML	LOCATING DOWEL PIN ø3/4 X 3.00 LG.-STEEL	1
1	COML	ALUM 6061-T6 HEAVY PLATE #1	1

PARTS LIST

UNLESS OTHERWISE SPECIFIED			ORIGINATOR	E.VILLEGAS	26-SEP-2002
.XX	.XXX	ANGLES	DRAWN	R.WILLIAMS	26-SEP-2002
± .03	± .010	± ---	CHECKED	W.CYKO	16-APR-2003
			APPROVED	E.VILLEGAS	16-APR-2003

1. BREAK ALL SHARP EDGES .015 MAX.
2. DO NOT SCALE DRAWING.
3. DIMENSIONS BASED UPON ANSI Y14.5M-1982.
4. ALL DIMENSIONS ARE INCHES
5. MAX. ALL MACH. SURFACES 125 √

USED ON: ME-427127

MATERIAL: 12.00 X 51.00 X 51.00 6061-T651,T6 ALUM

FERMI NATIONAL ACCELERATOR LABORATORY
UNITED STATES DEPARTMENT OF ENERGY

PPD/MECHANICAL DEPARTMENT
NUMI HADRON BEAM ABSORBER
CORE ALUM MODULE ASSY NO.1

SCALE	DRAWING NUMBER	SHEET	REV
1/8 & NOTED	8875.114-ME-427136	1 OF 1	A

CREATED WITH : Ideas11NXSeries | GROUP: PPD/MECHANICAL DEPARTMENT

REV	DESCRIPTION	DRAWN	DATE
		APPROVED	DATE
A	(2) LIFTING HOLES ADDED	G SMITH	1/22/04
		E.M.V	1/22/04

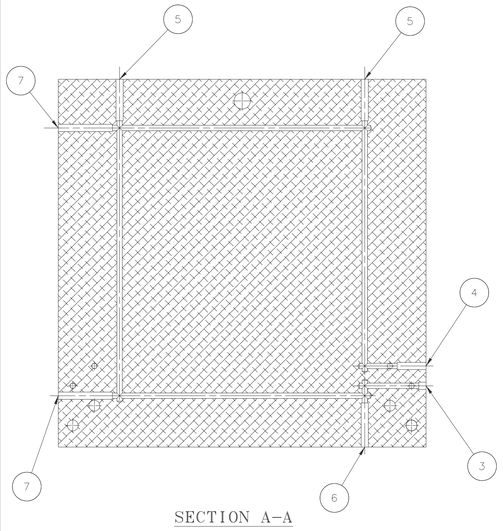

SECTION A-A

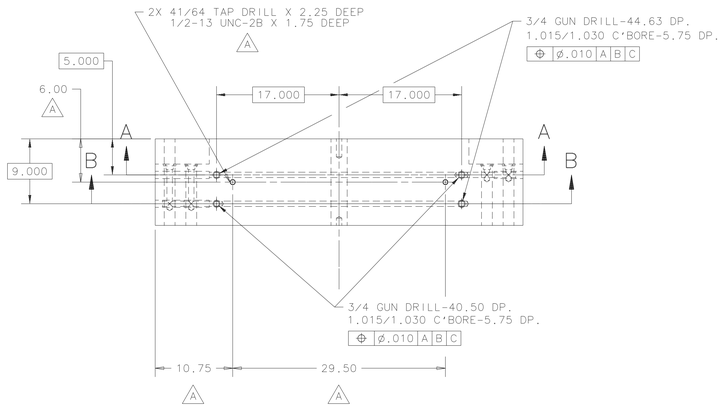

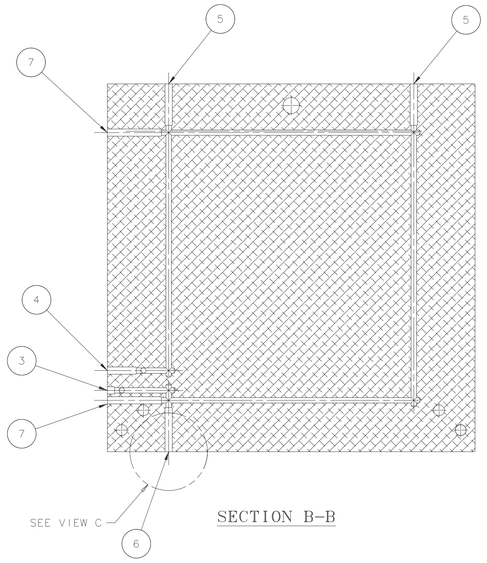

SECTION B-B

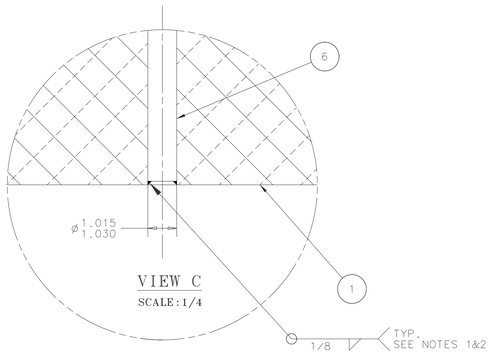

VIEW C

SCALE: 1/4

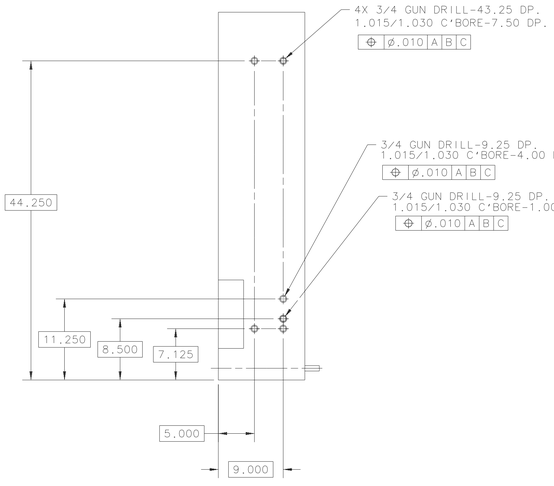

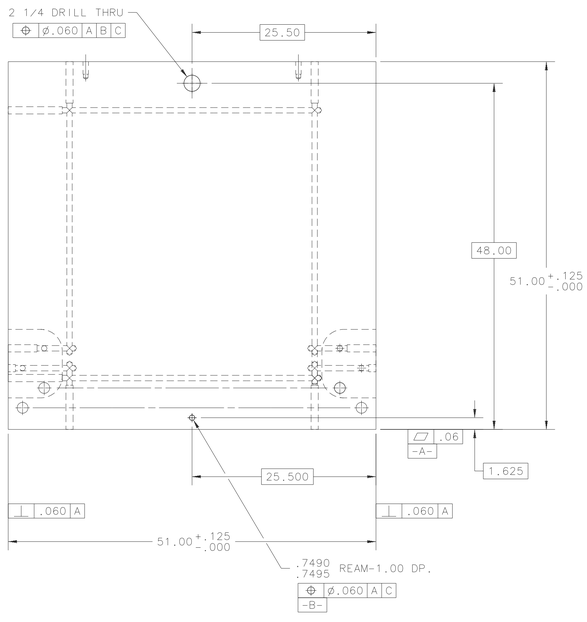

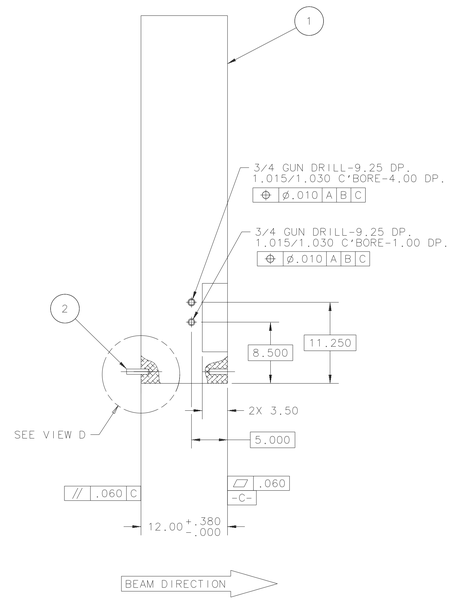

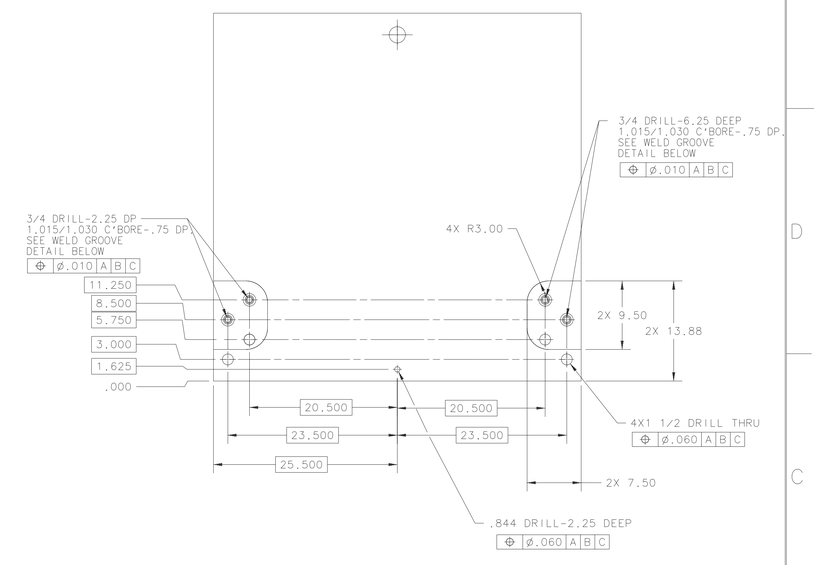

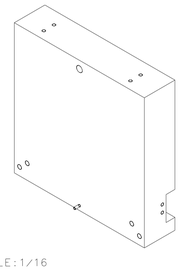

SCALE: 1/16

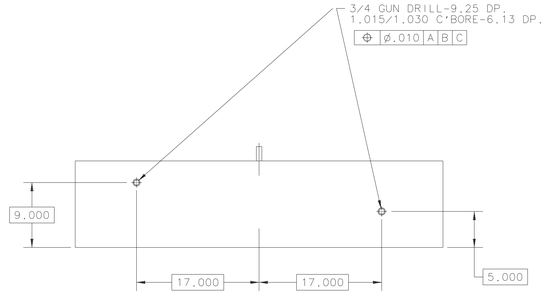

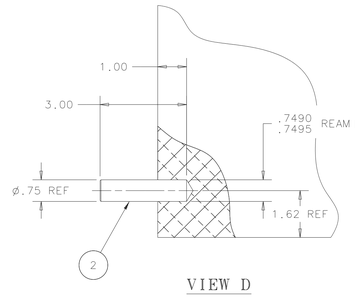

VIEW D

SCALE: 1/2

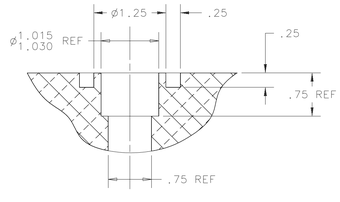

WELD GROOVE DETAIL

SCALE: 1/1

NOTES

1. USE 5154 WELDING ROD OR EQUIV.
2. PROTECTIVE COATING TO BE APPLIED AFTER CHROMATE CONVERSION.

NOTICE: IMAGE OBTAINED FROM FERMILAB WEB SITE
This information is provided for REFERENCE use only. Not for MANUFACTURE, or DESIGN INFORMATION.
All information contained in this document represents work sponsored by an agency of the U.S. Government. Neither the U.S. Government nor any agency thereof, nor Universities Research Association, Inc., nor any of their employees or officers, makes any warranty, express or implied, or assumes any legal liability or responsibility for the accuracy, completeness, or usefulness of any information, apparatus, product or process disclosed, or represents that its use would not infringe privately owned rights.

ITEM	PART NO.	DESCRIPTION OR SIZE	QTY.
7	COML	PLUG - ALUM, 6061-T6511 1.00 X 7.38 LG.	4
6	COML	PLUG - ALUM, 6061-T6511 1.00 X 6.00 LG.	2
5	COML	PLUG - ALUM, 6061-T6511 1.00 X 5.63 LG.	4
4	COML	PLUG - ALUM, 6061-T6511 1.00 X 3.88 LG.	2
3	COML	PLUG - ALUM, 6061-T6511 1.00 X .88 LG.	2
2	COML	LOCATING DOWEL PIN 3/4ø X 3.00 LG.-STEEL	1
1	COML	ALUM 6061-T6 HEAVY PLATE #2	1

PARTS LIST

UNLESS OTHERWISE SPECIFIED			ORIGINATOR	E.VILLEGAS	26-SEP-2002
.XX	.XXX	ANGLES	DRAWN	R.WILLIAMS	26-SEP-2002
± .03	± .010	± ---	CHECKED	W.CYKO	16-APR-2003
1. BREAK ALL SHARP EDGES .015 MAX. 2. DO NOT SCALE DRAWING. 3. DIMENSIONS BASED UPON ANSI Y14.5M-1982 4. MAX. ALL MACH. SURFACES 125			APPROVED	E.VILLEGAS	16-APR-2003
			USED ON	ME-427127	
			MATERIAL	12.00 X 51.00 X 51.00 6061-T651,T6 ALUM	

FERMI NATIONAL ACCELERATOR LABORATORY
UNITED STATES DEPARTMENT OF ENERGY

PPD/MECHANICAL DEPARTMENT
NUMI HADRON BEAM ABSORBER
CORE ALUM MODULE ASSY NO.2

SCALE	DRAWING NUMBER	SHEET	REV
1/8 & NOTED	8875.114-ME-427137	1 OF 1	A

CREATED WITH : Ideas11NXSeries | GROUP: PPD/MECHANICAL DEPARTMENT

REV	DESCRIPTION	DRAWN	DATE
		APPROVED	DATE
A	(2) LIFTING HOLES ADDED	G SMITH	1/22/04
		E.M.V	1/22/04

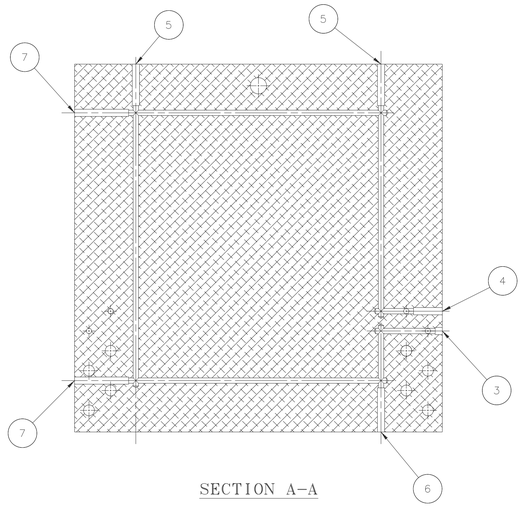

SECTION A-A

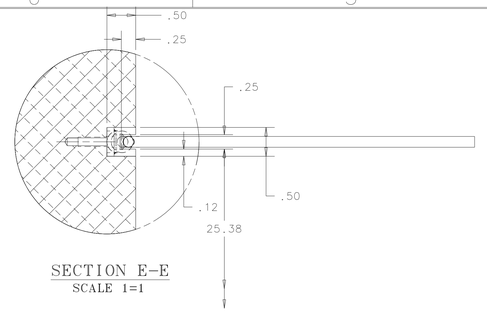

SECTION E-E
SCALE 1=1

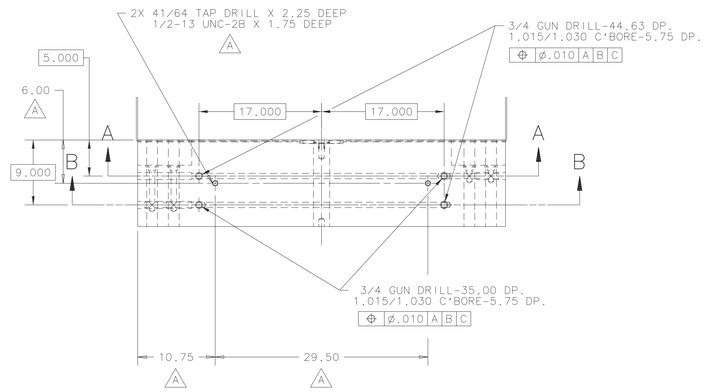

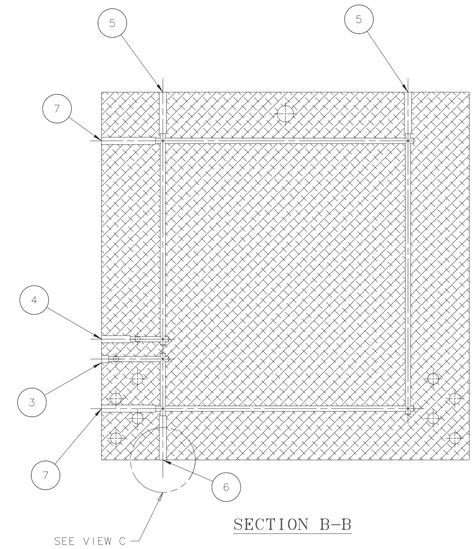

SECTION B-B

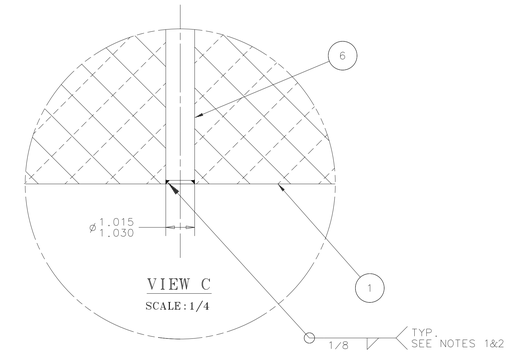

VIEW C
SCALE:1/4

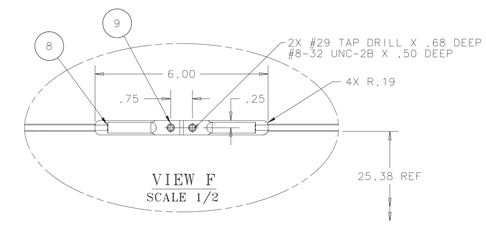

VIEW F
SCALE 1/2

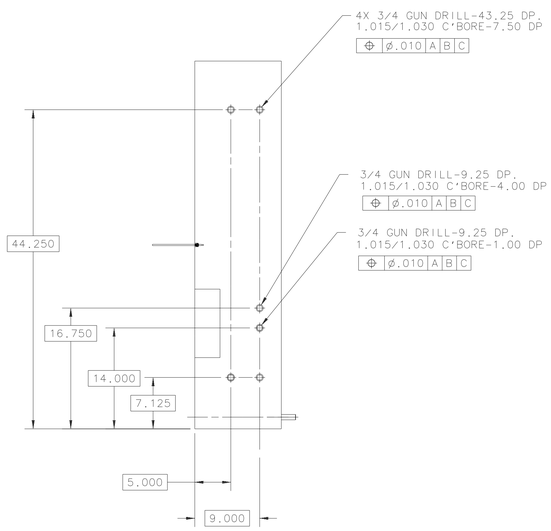

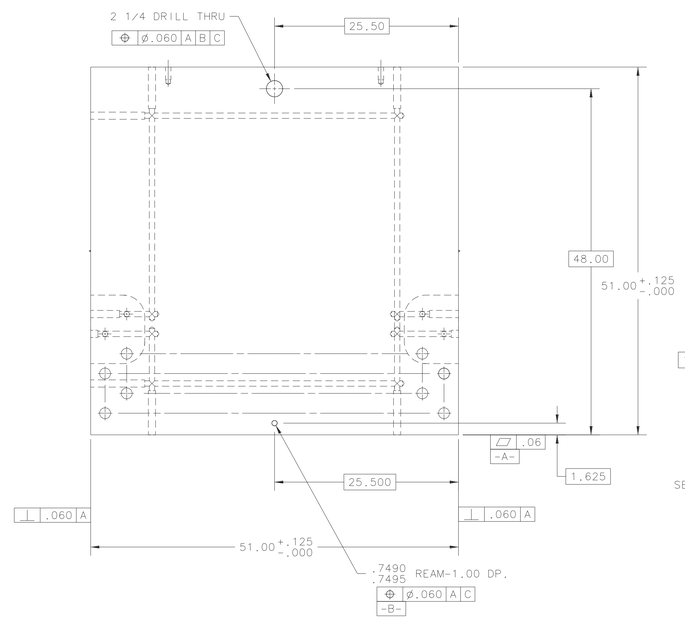

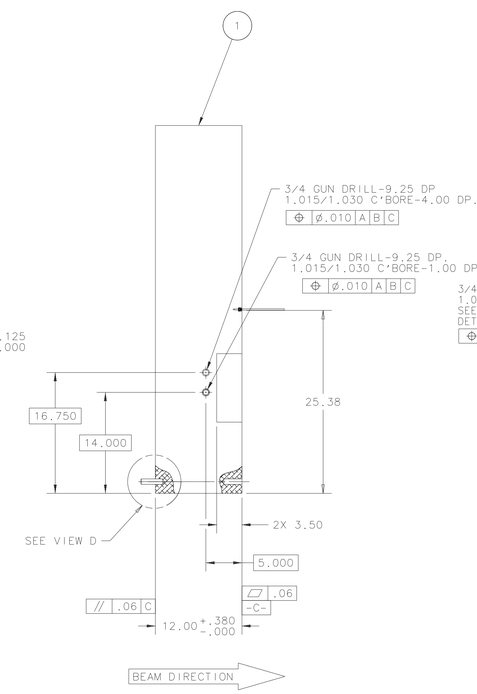

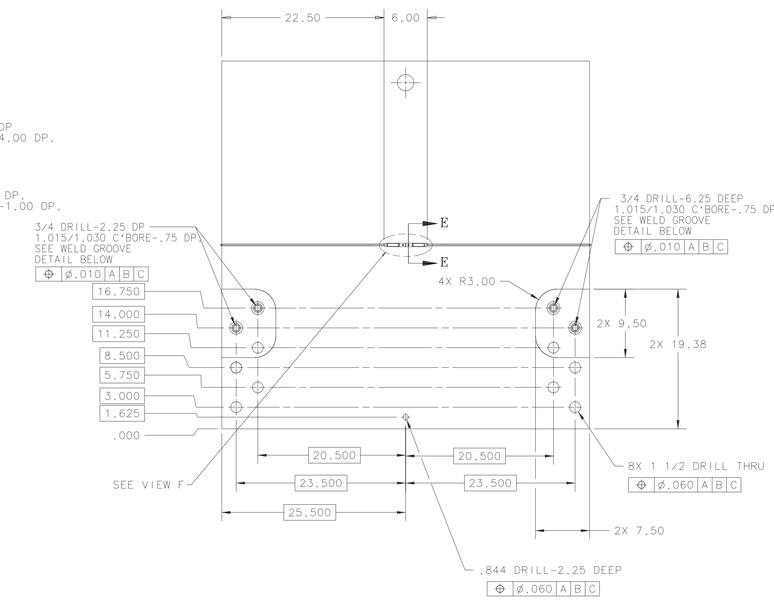

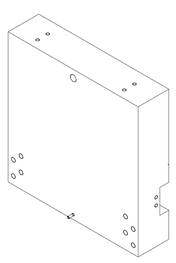

SCALE:1/16

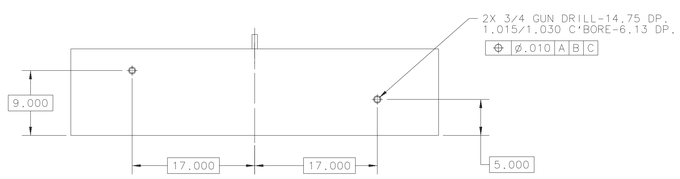

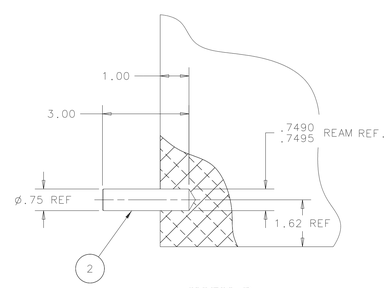

VIEW D
SCALE:1/2

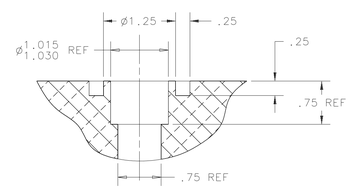

WELD GROOVE DETAIL
SCALE:1/1

NOTES

1. USE
2. PRES
CHEC

NOTICE WHEN PRINTED FROM FERMILAB WEB SITE
NOTICE : IMAGE OBTAINED FROM FERMILAB WEB SITE
This information is provided for reference use only.
Not for MANUFACTURE, or DESIGN INFORMATION.
All information contained in this document represents
work sponsored by an agency of the U.S. Government.
Neither the U.S. Government nor any agency thereof,
nor Universities Research Association, Inc., nor any of
their employees or officers, makes any warranty, express
or implied, or assumes any legal liability or
responsibility for the accuracy, completeness, or
usefulness of any information, apparatus, product or
process disclosed, or represents that its use would not
infringe privately owned rights.

ITEM	PART NO.	DESCRIPTION OR SIZE	QTY.
9	COML	SOCKET HD.SCREW #8-32 UNC-2A X 1/2" LG.	2
8	COML	OMEGA THERMOCOUPLE #XCIB-4-3-10	2
7	COML	PLUG - ALUM. 6061-T6511 1.00 X 7.38 LG.	4
6	COML	PLUG - ALUM. 6061-T6511 1.00 X 6.00 LG.	2
5	COML	PLUG - ALUM. 6061-T6511 1.00 X 5.63 LG.	4
4	COML	PLUG - ALUM. 6061-T6511 1.00 X 3.88 LG.	2
3	COML	PLUG - ALUM. 6061-T6511 1.00 X .88 LG.	2
2	COML	LOCATING DOWEL PIN 3/4ø X 3.00 LG.-STEEL	1
1	COML	ALUM 6061-T6 HEAVY PLATE #3	1

PARTS LIST

UNLESS OTHERWISE SPECIFIED				
.XX	.XXX	ANGLES	ORIGINATOR	E.VILLEGAS	26-SEP-2002
± .03	± .010	± ---	DRAWN	R.WILLIAMS	26-SEP-2002
			CHECKED	W.CYKO	16-APR-2003
			APPROVED	E.VILLEGAS	16-APR-2003

1. BREAK ALL SHARP EDGES .015 MAX.
2. DO NOT SCALE DRAWING.
3. DIMENSIONS BASED UPON ANSI Y14.5M-1982
4. MAX. ALL MACH. SURFACES 125

USED ON: ME-472127

MATERIAL: 12.00 X 51.00 X 51.00 6061-T651,T6 ALUM

FERMI NATIONAL ACCELERATOR LABORATORY
UNITED STATES DEPARTMENT OF ENERGY

PPD/MECHANICAL DEPARTMENT
NUMI HADRON BEAM ABSORBER
CORE ALUM MODULE ASSY NO.3

SCALE	DRAWING NUMBER	SHEET	REV
1/8 & NOTED	8875.114-ME-427138	1 OF 1	A

CREATED WITH : Ideas11NXSeries | GROUP: PPD/MECHANICAL DEPARTMENT

REV	DESCRIPTION	DRAWN	DATE
		APPROVED	DATE
A	(2) LIFTING HOLES ADDED	G SMITH	1/22/04
		E.M.V	1/22/04

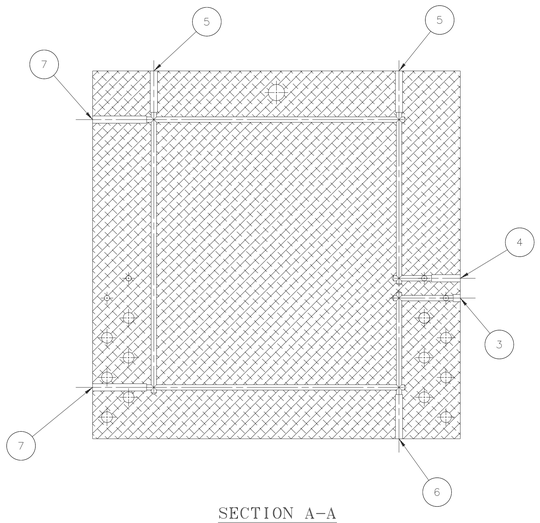

SECTION A-A

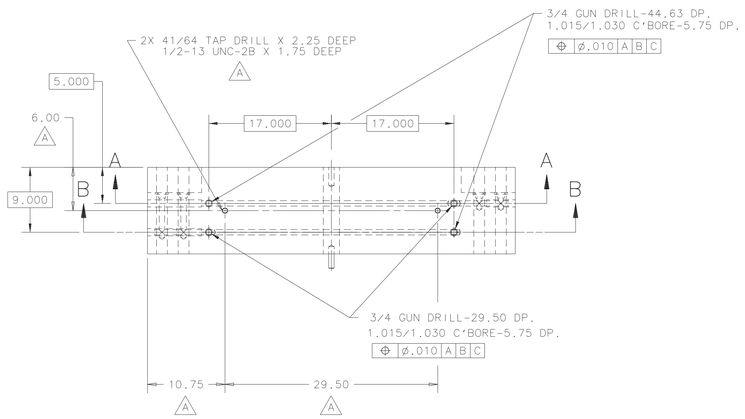

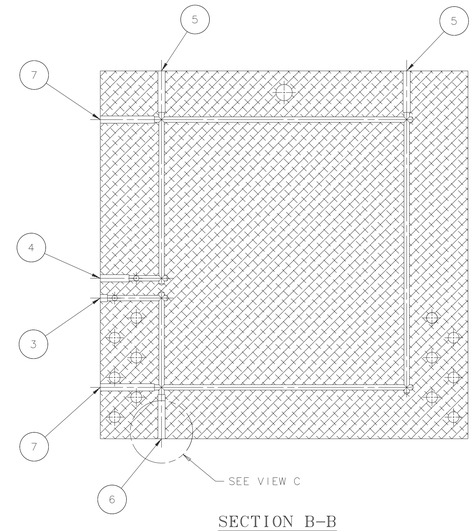

SECTION B-B

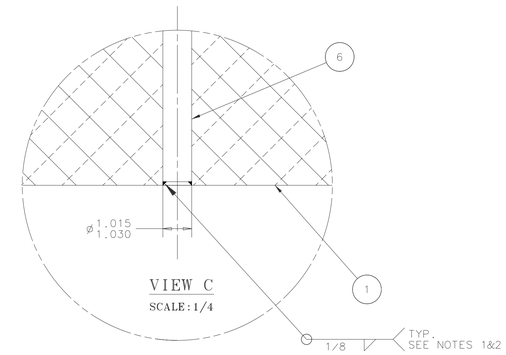

VIEW C
SCALE: 1/4

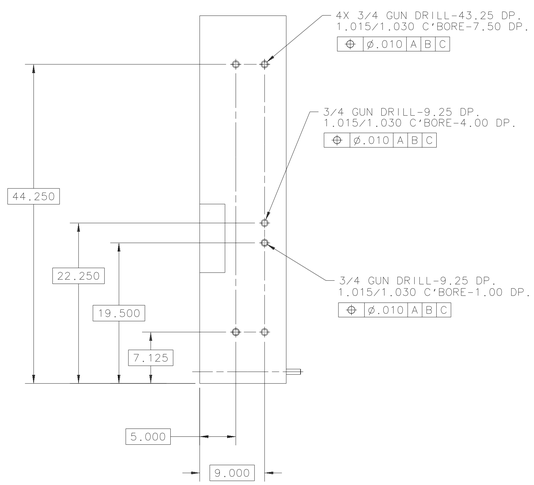

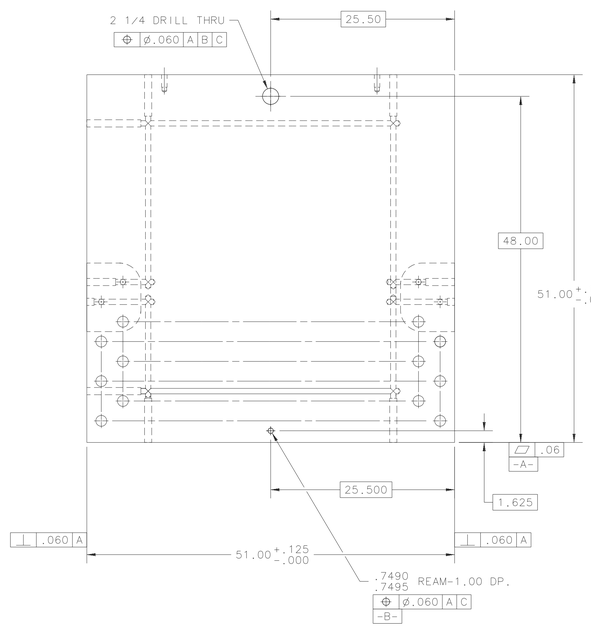

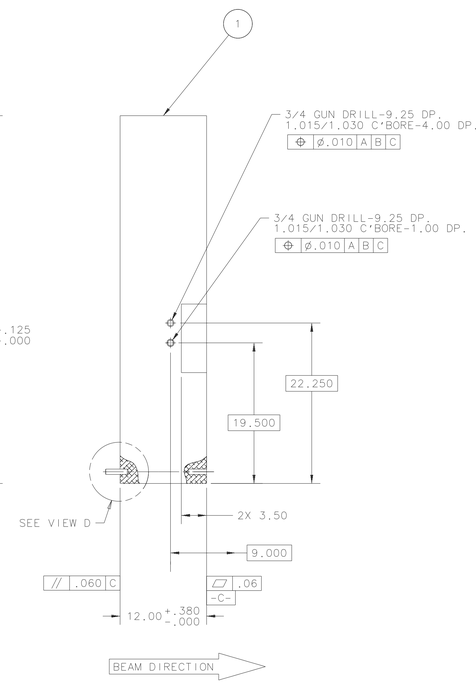

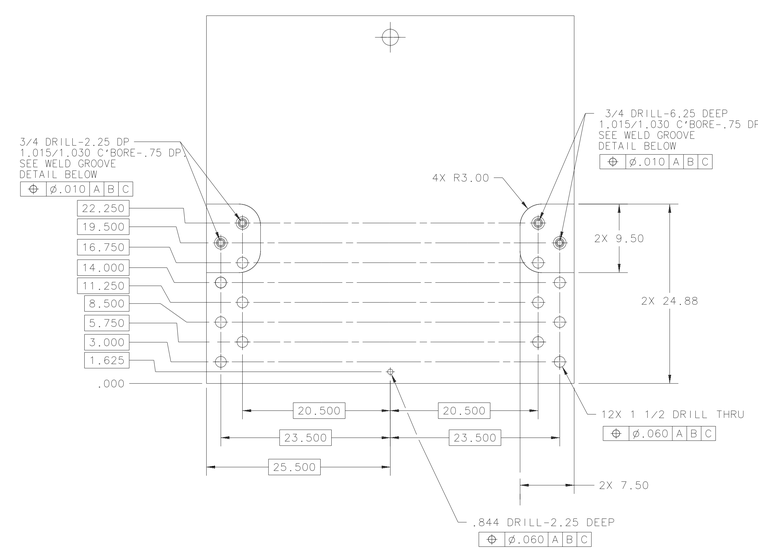

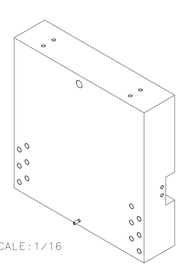

SCALE: 1/16

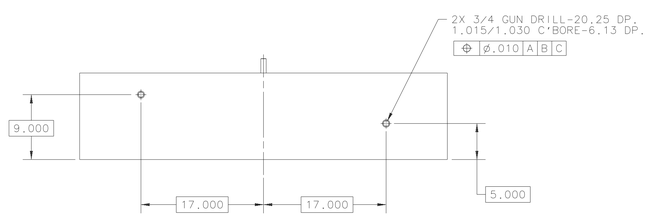

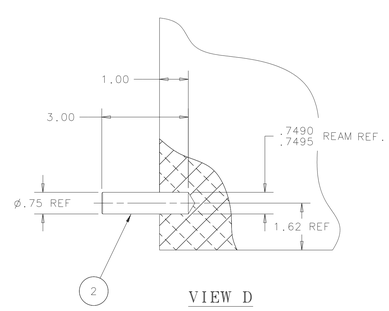

VIEW D
SCALE: 1/2

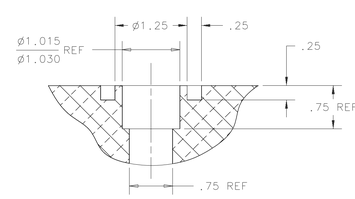

WELD GROOVE DETAIL
SCALE: 1/1

NOTES

1. USE S
2. PRESS
CHECK

NOTICE: IMAGE OBTAINED FROM FERMILAB WEB SITE
NOT OFFICIAL FERMILAB DOCUMENT
This information is provided for REFERENCE use only.
Not for MANUFACTURE or DESIGN INFORMATION.
All information contained in this document represents
work sponsored by an agency of the U.S. Government.
Neither the U.S. Government nor any agency thereof,
nor Universities Research Association, Inc., nor any of
their employees or officers, makes any warranty, express
or implied, or assumes any legal liability or
responsibility for the accuracy, completeness, or
usefulness of any information, apparatus, product or
process disclosed, or represents that its use would not
infringe privately owned rights.

ITEM	PART NO.	DESCRIPTION OR SIZE	QTY.
7	COML	PLUG - ALUM. 6061-T6511 1.00 X 7.38 LG.	4
6	COML	PLUG - ALUM. 6061-T6511 1.00 X 6.00 LG.	2
5	COML	PLUG - ALUM. 6061-T6511 1.00 X 5.63 LG.	4
4	COML	PLUG - ALUM. 6061-T6511 1.00 X 3.88 LG.	2
3	COML	PLUG - ALUM. 6061-T6511 1.00 X .88 LG.	2
2	COML	LOCATING DOWEL PIN 3/4ø X 3.00 LG.-STEEL	1
1	COML	ALUM 6061-T6 HEAVY PLATE #4	1

PARTS LIST

UNLESS OTHERWISE SPECIFIED			ORIGINATOR	E.VILLEGAS	26-SEP-2002
.XX	.XXX	ANGLES	DRAWN	R.WILLIAMS	26-SEP-2002
± .03	± .010	± ---	CHECKED	W.CYKO	16-APR-2003
			APPROVED	E.VILLEGAS	16-APR-2003

1. BREAK ALL SHARP EDGES .015 MAX.
2. DO NOT SCALE DRAWING.
3. DIMENSIONS BASED UPON ANSI Y14.5M-1982
4. MAX. ALL MACH. SURFACES 125

USED ON: ME-427127

MATERIAL: 12.00 X 51.00 X 51.00 6061-T651,T6 ALUM

FERMI NATIONAL ACCELERATOR LABORATORY
UNITED STATES DEPARTMENT OF ENERGY

PPD/MECHANICAL DEPARTMENT
NUMI HADRON BEAM ABSORBER
CORE ALUM MODULE ASSY NO.4

SCALE	DRAWING NUMBER	SHEET	REV
1/8 & NOTED	8875.114-ME-427139	1 OF 1	A

CREATED WITH : Ideas11NXSeries | GROUP: PPD/MECHANICAL DEPARTMENT

REV	DESCRIPTION	DRAWN	DATE
		APPROVED	DATE
A	(2) LIFTING HOLES ADDED	G SMITH	1/22/04
		E.M.V	1/22/04

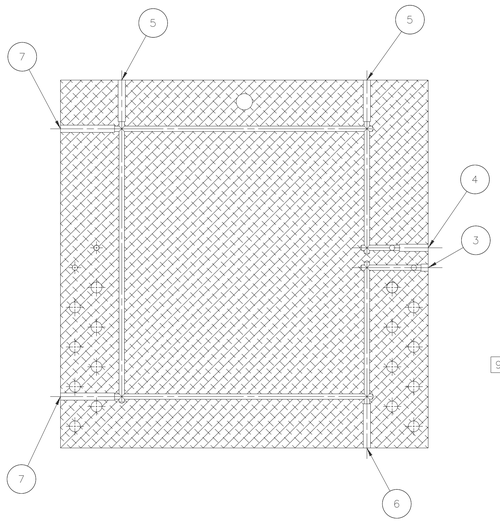

SECTION A-A

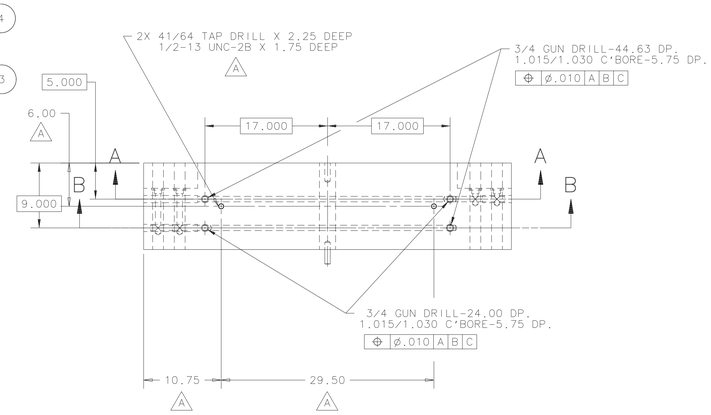

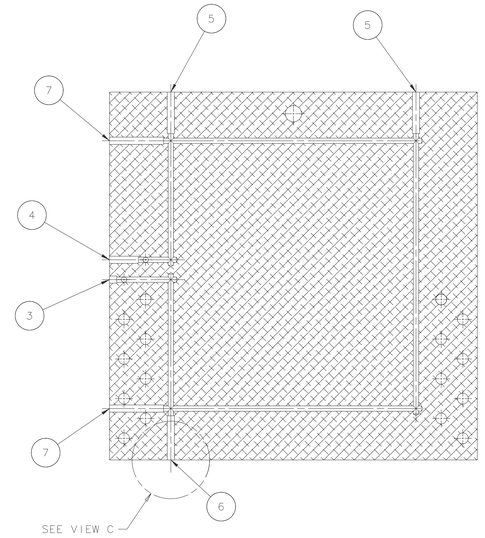

SECTION B-B

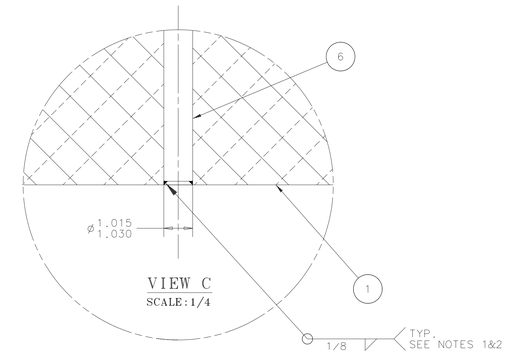

VIEW C
SCALE: 1/4

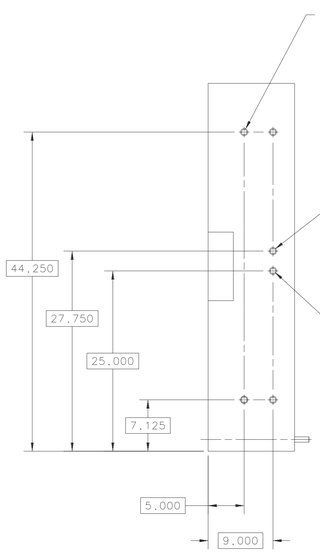

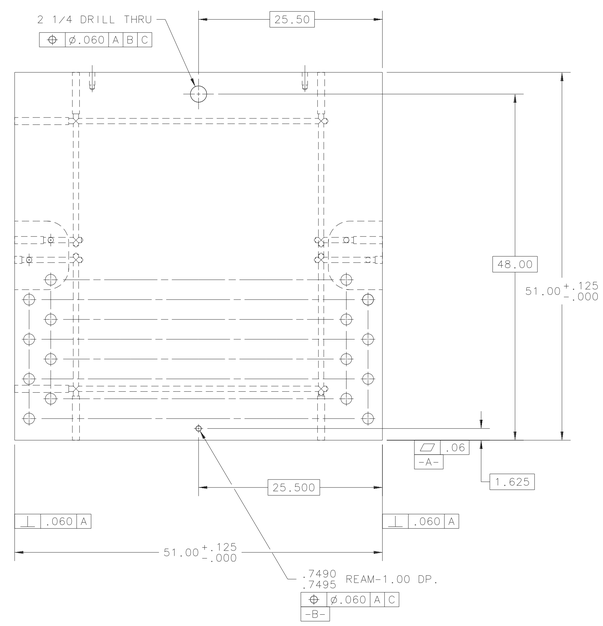

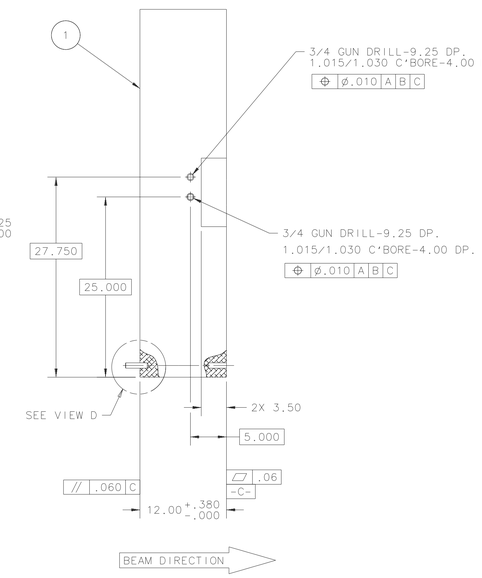

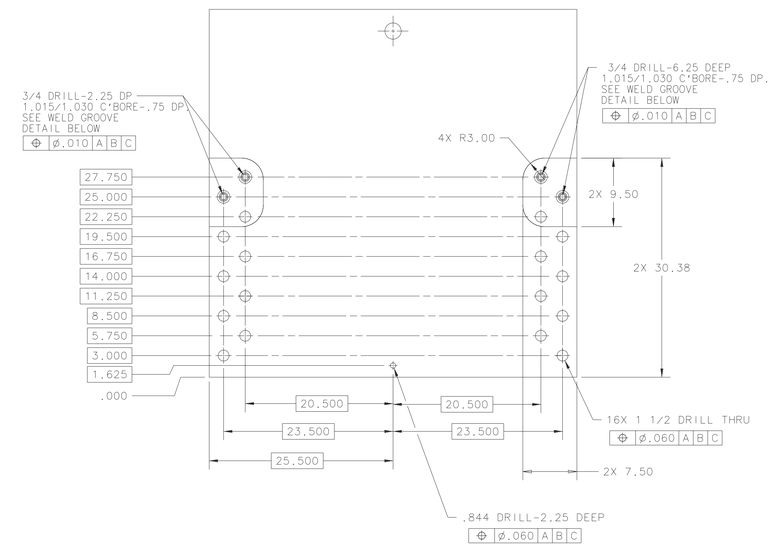

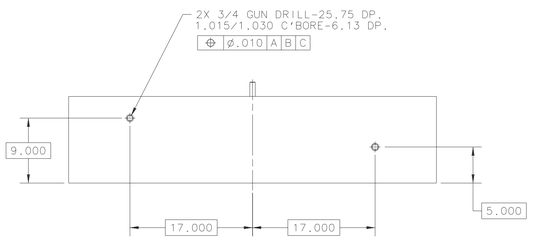

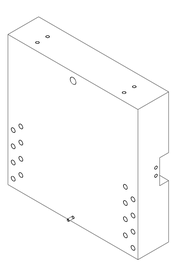

SCALE: 1/16

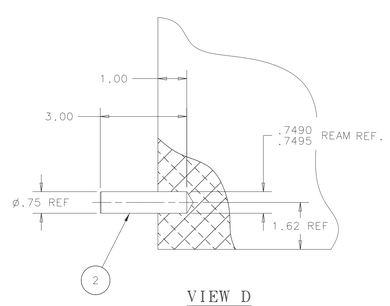

VIEW D
SCALE: 1/2

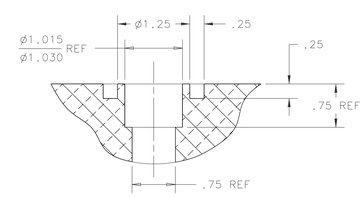

WELD GROOVE DETAIL
SCALE: 1/1

NOTES

1. USE 1/8" WELDING ROD FOR WELDS.
2. PRESS FIT DOWELS INTO PLUGS.
CHECK FIT.

NOTICE: IMAGE OBTAINED FROM FERMILAB WEB SITE
This information is provided for REFERENCE use only.
Not for MANUFACTURE, or DESIGN INFORMATION.
All information contained in this document represents work sponsored by an agency of the U.S. Government. Neither the U.S. Government nor any agency thereof, nor Universities Research Association, Inc., nor any of their employees or officers, makes any warranty, express or implied, or assumes any legal liability or responsibility for the accuracy, completeness, or usefulness of any information, apparatus, product or process disclosed, or represents that its use would not infringe privately owned rights.

ITEM	PART NO.	DESCRIPTION OR SIZE	QTY.
7	COML	PLUG - ALUM, 6061-T6511 1.00 X 7.38 LG.	4
6	COML	PLUG - ALUM, 6061-T6511 1.00 X 6.00 LG.	2
5	COML	PLUG - ALUM, 6061-T6511 1.00 X 5.75 LG.	4
4	COML	PLUG - ALUM, 6061-T6511 1.00 X 3.88 LG.	2
3	COML	PLUG - ALUM, 6061-T6511 1.00 X .88 LG.	2
2	COML	LOCATING DOWEL PIN 3/4ø X 3.00 LG.-STEEL	1
1	COML	ALUM 6061-T6 HEAVY PLATE #5	1

PARTS LIST

UNLESS OTHERWISE SPECIFIED				
.XX	.XXX	ANGLES	ORIGINATOR	E.VILLEGAS	26-SEP-2002
± .03	± .010	± ---	DRAWN	R.WILLIAMS	26-SEP-2002
			CHECKED	W.CYKO	16-APR-2003
			APPROVED	E.VILLEGAS	16-APR-2003

1. BREAK ALL SHARP EDGES .015 MAX.
2. DO NOT SCALE DRAWING.
3. DIMENSIONS BASED UPON ANSI Y14.5M-1982
4. MAX. ALL MACH. SURFACES 125

USED ON: MD-427127

MATERIAL: 12.00 X 51.00 X 51.00 6061-T651,T6 ALUM

FERMI NATIONAL ACCELERATOR LABORATORY
UNITED STATES DEPARTMENT OF ENERGY

PPD/MECHANICAL DEPARTMENT
NUMI HADRON BEAM ABSORBER
CORE MODULE ASSY NO.5

SCALE	DRAWING NUMBER	SHEET	REV
1/8 & NOTED	8875.114-ME-427140	1 OF 1	A

CREATED WITH : Ideas11NXSeries | GROUP: PPD/MECHANICAL DEPARTMENT

REV	DESCRIPTION	DRAWN	DATE
		APPROVED	DATE
A	(2) LIFTING HOLES ADDED	G SMITH	1/22/04
		E.M.V	1/22/04

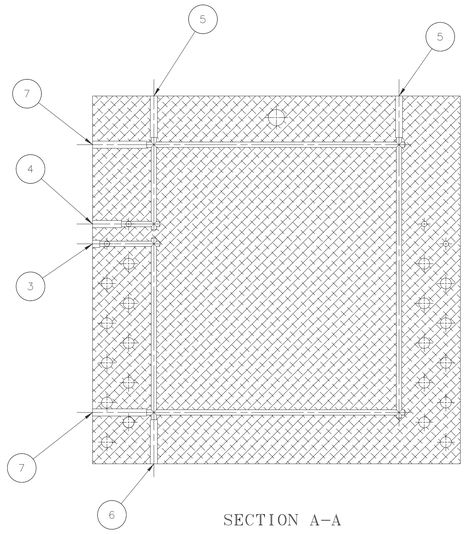

SECTION A-A

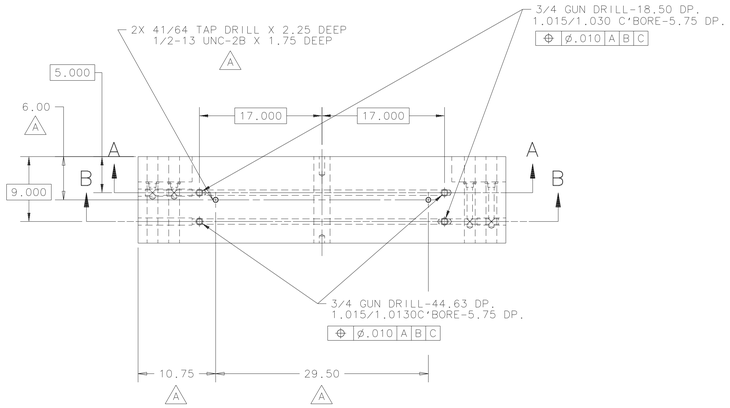

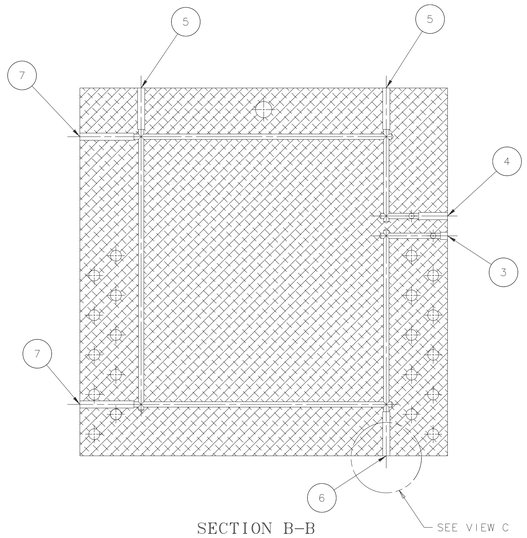

SECTION B-B

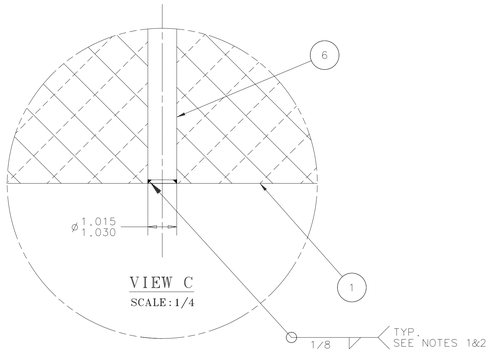

VIEW C

SCALE: 1/4

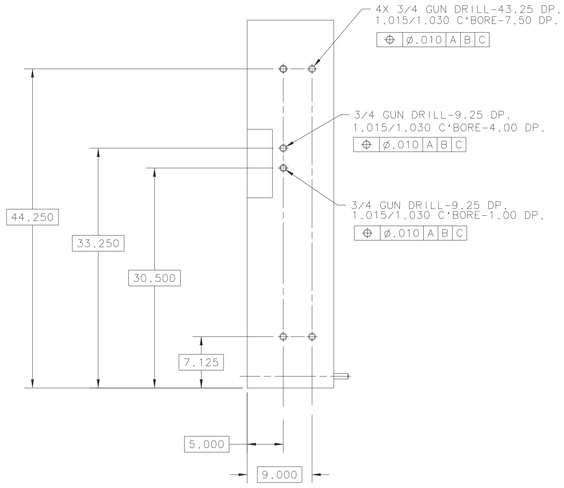

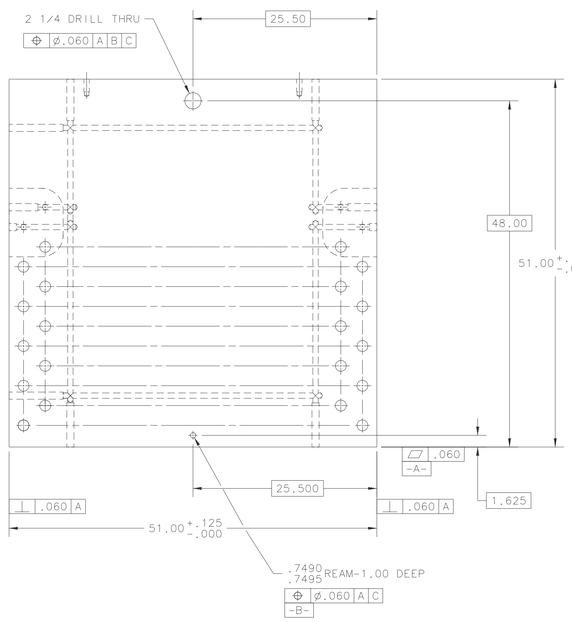

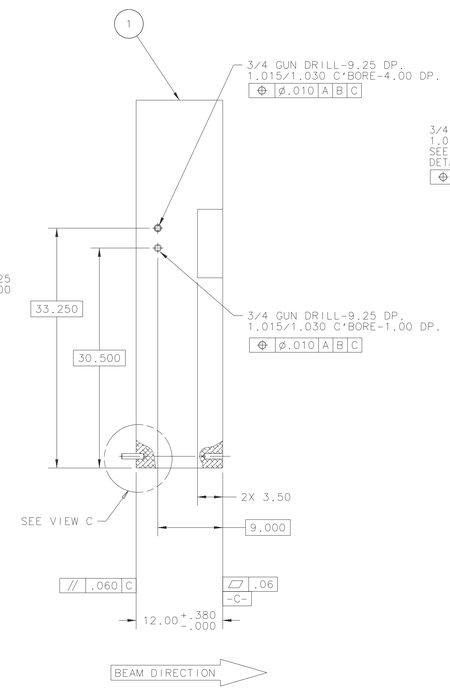

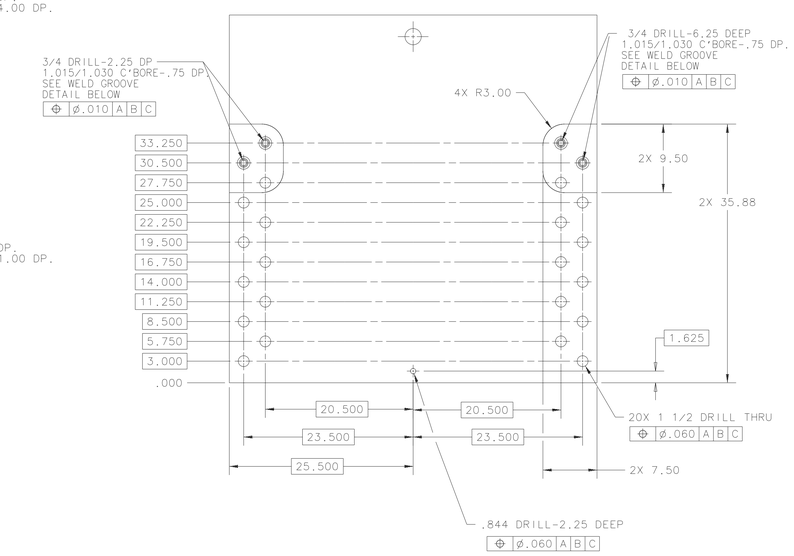

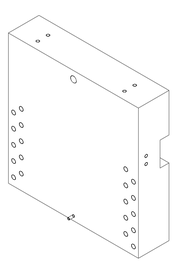

SCALE: 1/16

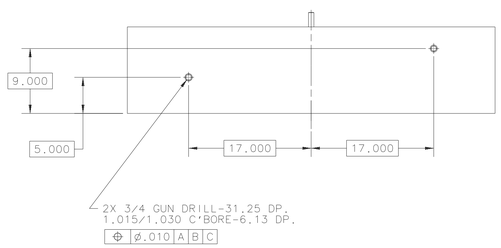

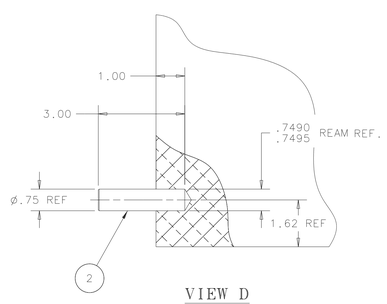

VIEW D

SCALE: 1/2

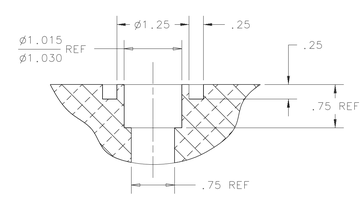

WELD GROOVE DETAIL

SCALE: 1/1

NOTES

1. USE 5183 WELDING ROD OR EQUIVALENT.
2. PRESSURE TEST WELDS TO 100 PSI AND
CHECK FOR LEAKS.

NOTICE: IMAGE OBTAINED FROM FERMILAB WEB SITE
This information is provided for REFERENCE use only.
Not for MANUFACTURE, or DESIGN INFORMATION.
All information contained in this document represents work sponsored by an agency of the U.S. Government. Neither the U.S. Government nor any agency thereof, nor Universities Research Association, Inc., nor any of their employees or officers, makes any warranty, express or implied, or assumes any legal liability or responsibility for the accuracy, completeness, or usefulness of any information, apparatus, product or process disclosed, or represents that its use would not infringe privately owned rights.

ITEM	PART NO.	DESCRIPTION OR SIZE	QTY.
7	COML	PLUG - ALUM, 6061-T6511 1.00 X 7.38 LG.	4
6	COML	PLUG - ALUM, 6061-T6511 1.00 X 6.00 LG.	2
5	COML	PLUG - ALUM, 6061-T6511 1.00 X 5.63 LG.	4
4	COML	PLUG - ALUM, 6061-T6511 1.00 X 3.88 LG.	2
3	COML	PLUG - ALUM, 6061-T6511 1.00 X .88 LG.	2
2	COML	LOCATING DOWEL PIN 3/4Ø X 3.00 LG.-STEEL	1
1	COML	ALUM 6061-T6 HEAVY PLATE #6	1

PARTS LIST

UNLESS OTHERWISE SPECIFIED					
.XX	.XXX	ANGLES	ORIGINATOR	E.VILLEGAS	26-SEP-2002
± .03	± .010	± ---	DRAWN	R.WILLIAMS	26-SEP-2002
			CHECKED	W.CYKO	16-APR-2003
			APPROVED	E.VILLEGAS	16-APR-2003

1. BREAK ALL SHARP EDGES .015 MAX.
2. DO NOT SCALE DRAWING.
3. DIMENSIONS BASED UPON ANSI Y14.5M-1982
4. MAX. ALL MACH. SURFACES 125√

USED ON: ME-427127

MATERIAL: 12.00 X 51.00 X 51.00 6061-T651,T6 ALUM

FERMI NATIONAL ACCELERATOR LABORATORY
UNITED STATES DEPARTMENT OF ENERGY

PPD/MECHANICAL DEPARTMENT
NUMI HADRON BEAM ABSORBER
CORE ALUM ASSY NO.6

SCALE	DRAWING NUMBER	SHEET	REV
1/8 & NOTED	8875.114-ME-427141	1 OF 1	A

CREATED WITH : Ideas11NXSeries | GROUP: PPD/MECHANICAL DEPARTMENT

REV	DESCRIPTION	DRAWN	DATE
		APPROVED	DATE
A	(2) LIFTING HOLES ADDED	G SMITH	1/22/04
		E.M.V	1/22/04

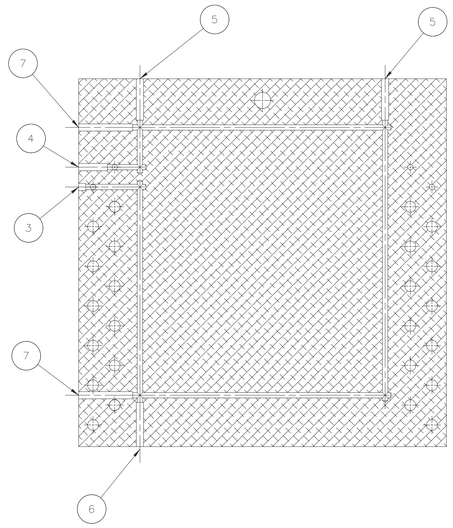

SECTION A-A

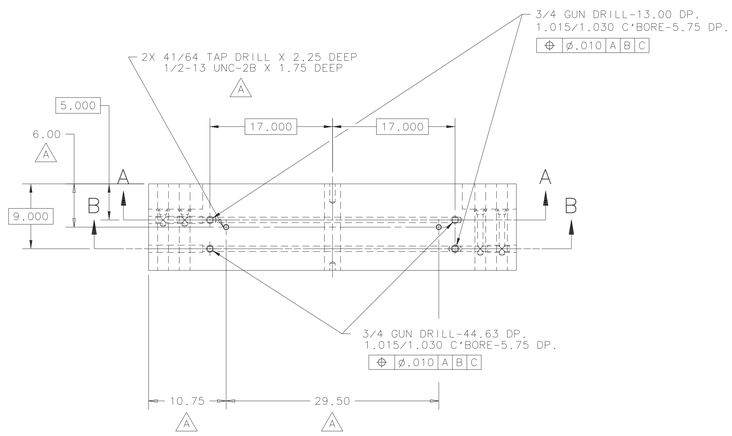

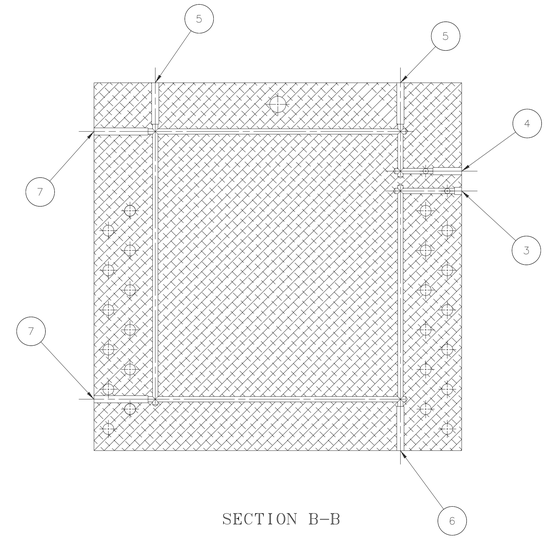

SECTION B-B

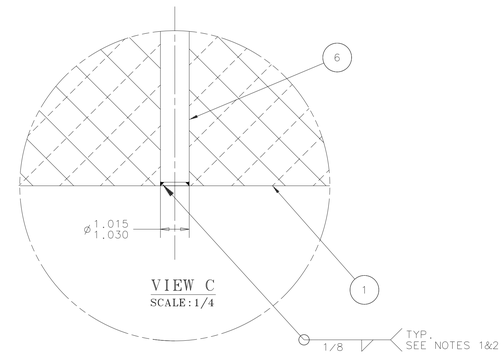

VIEW C
SCALE: 1/4

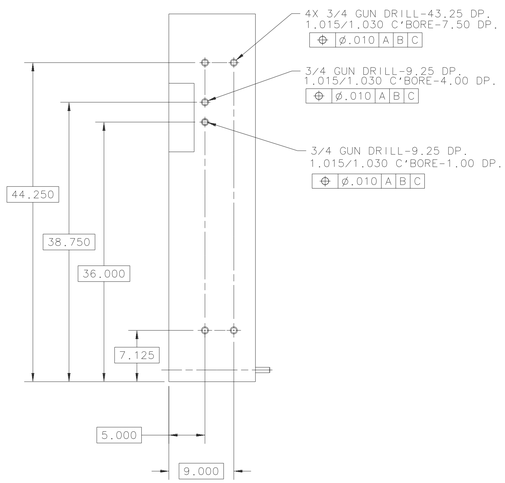

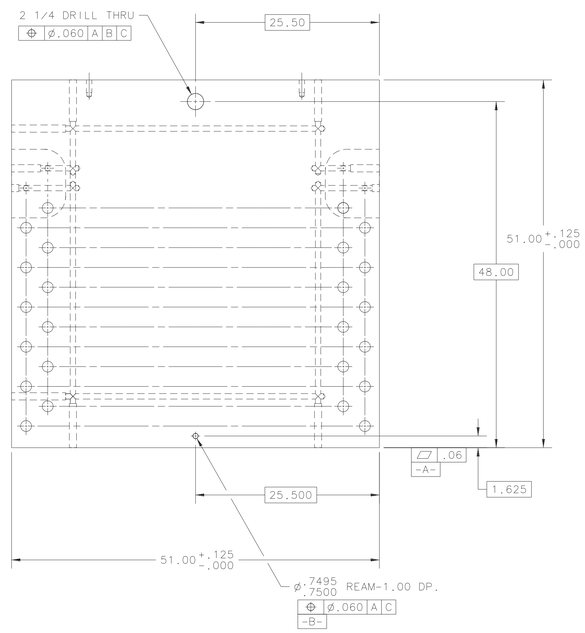

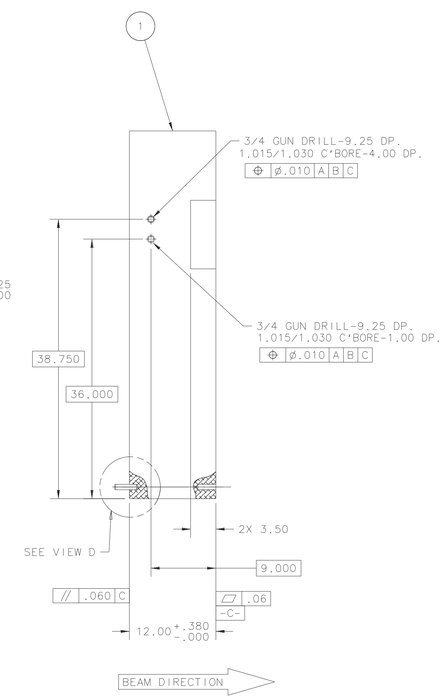

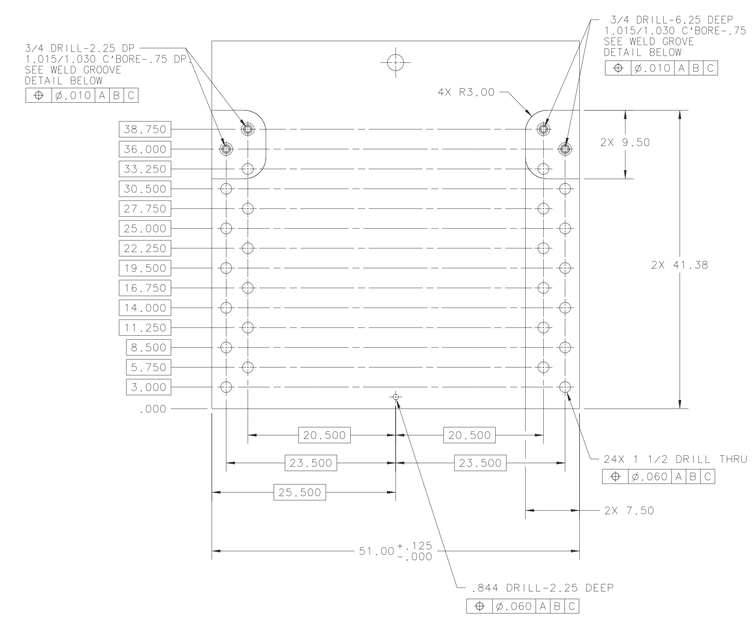

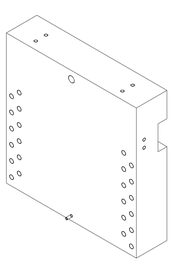

SCALE: 1/16

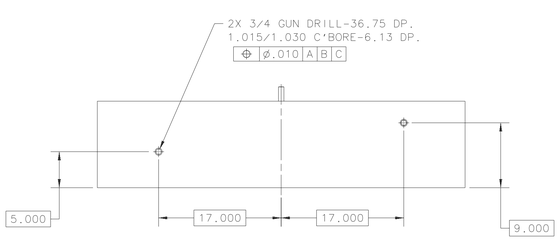

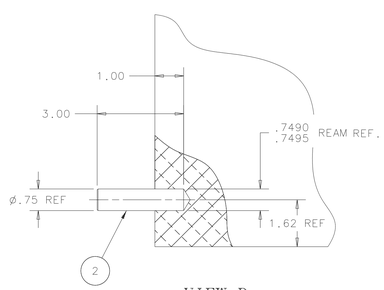

VIEW D
SCALE: 1/2

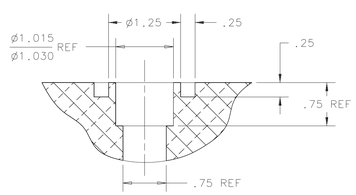

WELD GROOVE DETAIL
SCALE: 1/1

NOTES

1. USE 5154 WELDING ROD OR EQUIV.
2. PRESS [illegible] CHECK [illegible]

NOTICE: IMAGE OBTAINED FROM FERMILAB WEB SITE
This information is provided for REFERENCE use only.
Not for MANUFACTURE, or DESIGN INFORMATION.
All information contained in this document represents work sponsored by an agency of the U.S. Government.
Neither the U.S. Government nor any agency thereof, nor Universities Research Association, Inc., nor any of their employees or officers, makes any warranty, express or implied, or assumes any legal liability or responsibility for the accuracy, completeness, or usefulness of any information, apparatus, product or process disclosed, or represents that its use would not infringe privately owned rights.

ITEM	PART NO.	DESCRIPTION OR SIZE	QTY.
7	COML	PLUG - ALUM, 6061-T6511 1.00 X 7.38 LG.	4
6	COML	PLUG - ALUM, 6061-T6511 1.00 X 6.00 LG.	2
5	COML	PLUG - ALUM, 6061-T6511 1.00 X 5.63 LG.	4
4	COML	PLUG - ALUM, 6061-T6511 1.00 X 3.88 LG.	2
3	COML	PLUG - ALUM, 6061-T6511 1.00 X .88 LG.	2
2	COML	LOCATING DOWEL PIN 3/4ø X 3.00 LG.-STEEL	1
1	COML	ALUM 6061-T6 HEAVY PLATE #7	1

PARTS LIST

UNLESS OTHERWISE SPECIFIED				
.XX	.XXX	ANGLES	ORIGINATOR	E.VILLEGAS	03-FEB-2003
± .03	± .010	± ---	DRAWN	G.SMITH	03-FEB-2003
			CHECKED	W.CYKO	16-APR-2003
			APPROVED	E.VILLEGAS	16-APR-2003

1. BREAK ALL SHARP EDGES .015 MAX.
2. DO NOT SCALE DRAWING.
3. DIMENSIONS BASED UPON ANSI Y14.5M-1982
4. ALL DIMENSIONS ARE INCHES
5. MAX. ALL MACH. SURFACES 125

USED ON: ME-427127

MATERIAL: 12.00 X 51.00 X 51.00 6061-T651,T6 ALUM

FERMI NATIONAL ACCELERATOR LABORATORY
UNITED STATES DEPARTMENT OF ENERGY

PPD/MECHANICAL DEPARTMENT
NUMI HADRON BEAM ABSORBER
CORE ALUM ASSY NO.7

SCALE	DRAWING NUMBER	SHEET	REV
1/8 & NOTED	8875.114-ME-427623	1 OF 1	A

CREATED WITH : Ideas11NXSeries | GROUP: PPD/MECHANICAL DEPARTMENT

REV	DESCRIPTION	DRAWN	DATE
		APPROVED	DATE

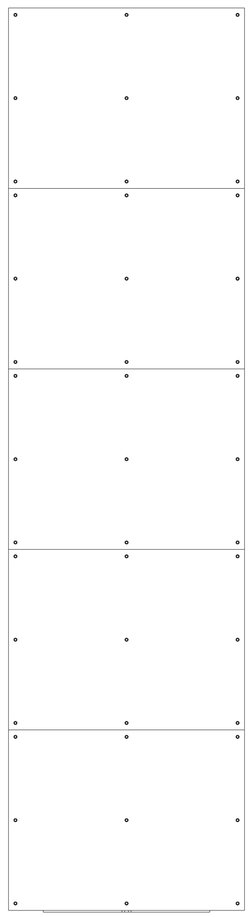

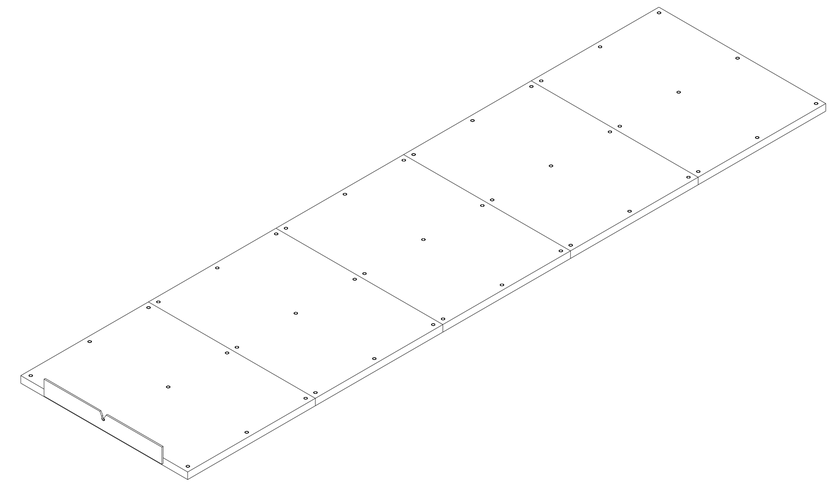

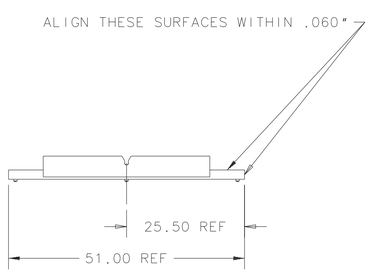

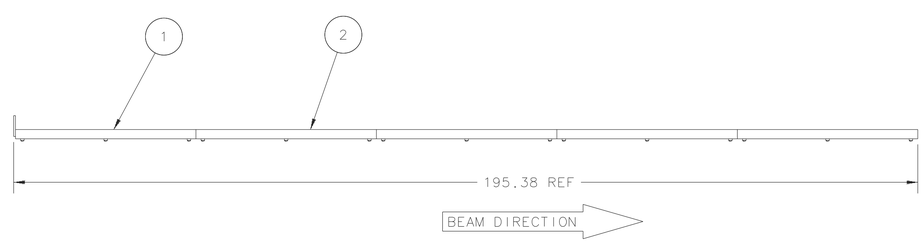

ITEM	PART NO.	DESCRIPTION OR SIZE	QTY.
2	MD-427162	CORE SUPPORT PLATE ASSY	4
1	MD-427160	CORE SUPPORT PLATE WELDMT ASSY	1

PARTS LIST

UNLESS OTHERWISE SPECIFIED					
.XX	.XXX	ANGLES	ORIGINATOR	E.VILLEGAS	02-OCT-2002
± .03	± --	± ---	DRAWN	R.WILLIAMS	02-OCT-2002
			CHECKED	W.CYKO	16-APR-2003
			APPROVED	E.VILLEGAS	16-APR-2003

1. BREAK ALL SHARP EDGES .015 MAX.
2. DO NOT SCALE DRAWING.
3. DIMENSIONS BASED UPON ANSI Y14.5M-1982
4. ALL DIMENSIONS ARE INCHES
5. MAX. ALL MACH. SURFACES 125

USED ON: ME-427127

MATERIAL: SEE PARTS LIST ABOVE

FERMI NATIONAL ACCELERATOR LABORATORY
UNITED STATES DEPARTMENT OF ENERGY

PPD/MECHANICAL DEPARTMENT
NUMI HADRON BEAM ABSORBER
CORE SUPPORT ASSY

SCALE	DRAWING NUMBER	SHEET	REV
1/16	8875.114-MD-427159	1 OF 1	

CREATED WITH : Ideas11NXSeries | GROUP: PPD/MECHANICAL DEPARTMENT

NOTICE: IMAGE OBTAINED FROM FERMILAB WEB SITE

This information is provided for REFERENCE use only. Not for MANUFACTURE, or DESIGN INFORMATION. All information contained in this document represents work sponsored by an agency of the U.S. Government. Neither the U.S. Government nor any agency thereof, nor Universities Research Association, Inc., nor any of their employees or officers, makes any warranty, express or implied, or assumes any legal liability or responsibility for the accuracy, completeness, or usefulness of any information, apparatus, product or process disclosed, or represents that its use would not infringe privately owned rights.

REV	DESCRIPTION	DRAWN	DATE
		APPROVED	DATE

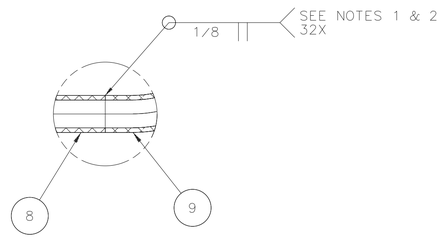

ELBOW TO TUBING
WELD DETAIL A

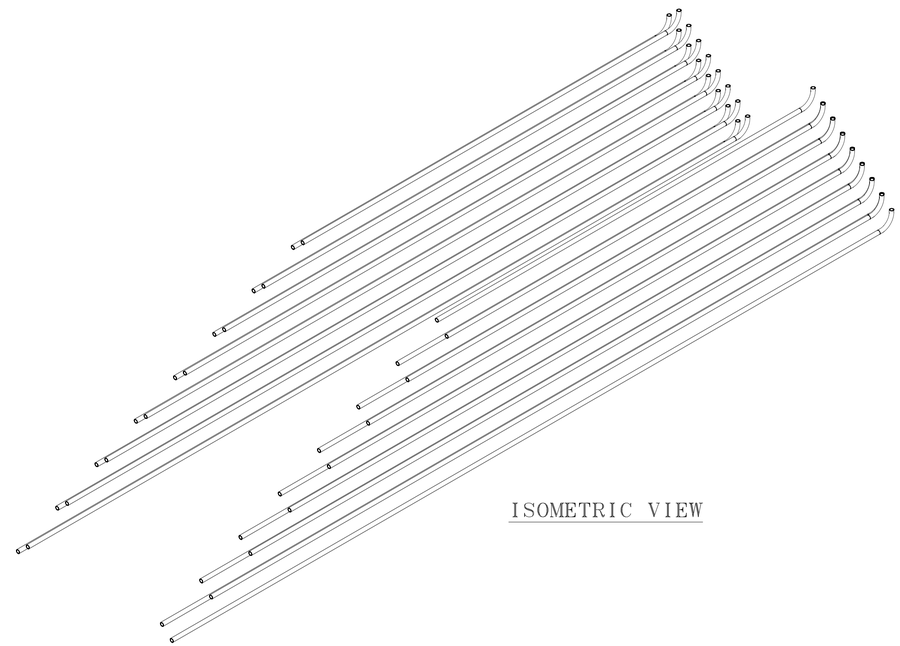

ISOMETRIC VIEW

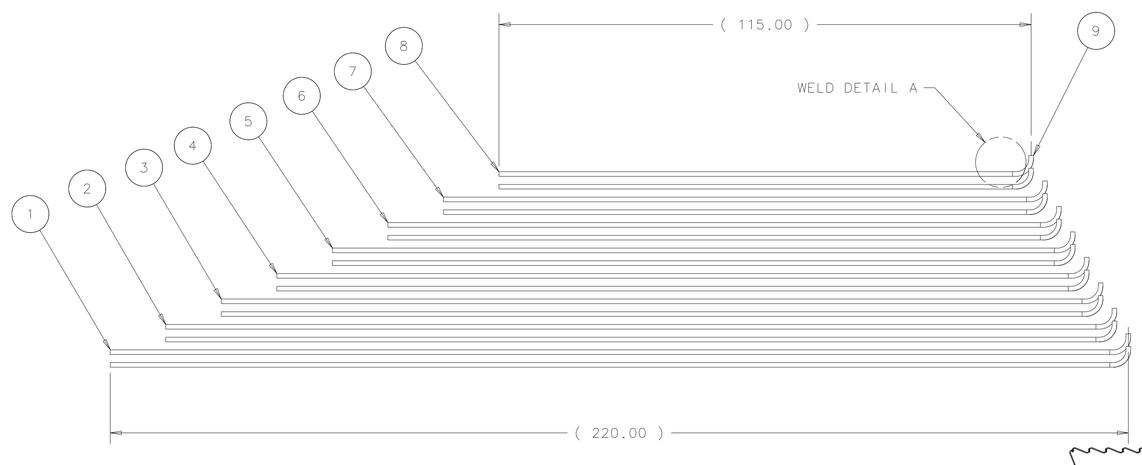

ITEM	PART NO.	DESCRIPTION OR SIZE	QTY.
9	COM'L	ALUMINUM 90°WELDED ELBOW 6061-T6 1 O.D. X .125 WALL	32
8	COM'L	ALUMINUM ROUND TUBING 6061-T6 1 O.D. X .125 WALL X 111.00 LG.	4
7	COM'L	ALUMINUM ROUND TUBING 6061-T6 1 O.D. X .125 WALL X 126.00 LG.	4
6	COM'L	ALUMINUM ROUND TUBING 6061-T6 1 O.D. X .125 WALL X 141.00 LG.	4
5	COM'L	ALUMINUM ROUND TUBING 6061-T6 1 O.D. X .125 WALL X 156.00 LG.	4
4	COM'L	ALUMINUM ROUND TUBING 6061-T6 1 O.D. X .125 WALL X 171.00 LG.	4
3	COM'L	ALUMINUM ROUND TUBING 6061-T6 1 O.D. X .125 WALL X 186.00 LG.	4
2	COM'L	ALUMINUM ROUND TUBING 6061-T6 1 O.D. X .125 WALL X 201.00 LG.	4
1	COM'L	ALUMINUM ROUND TUBING 6061-T6 1 O.D. X .125 WALL X 216.00 LG.	4

PARTS LIST

UNLESS OTHERWISE SPECIFIED					
.XX	.XXX	ANGLES	ORIGINATOR	E.VILLEGAS	16-JAN-2004
± .06	± ---	± ---	DRAWN	G.SMITH	16-JAN-2004
			CHECKED	C.GRIMM	11-MAR-2004
			APPROVED	E.VILLEGAS	09-APR-2004

1. BREAK ALL SHARP EDGES .015 MAX.
2. DO NOT SCALE DRAWING.
3. DIMENSIONS BASED UPON ANSI Y14.5M-1982
4. ALL DIMENSIONS ARE INCHES
5. MAX. ALL MACH. SURFACES ---√

USED ON: ME-427127

MATERIAL: SEE PARTS LIST ABOVE

FERMI NATIONAL ACCELERATOR LABORATORY
UNITED STATES DEPARTMENT OF ENERGY

PPD/MECHANICAL DEPARTMENT
NUMI HADRON BEAM ABSORBER
CORE TUBING ASSEMBLY

SCALE	DRAWING NUMBER	SHEET	REV
1/16	8875.114-MD-431701	1 OF 1	

CREATED WITH : Ideas9m3 GROUP: PPD/MECHANICAL DEPARTMENT

NOTICE: IMAGE OBTAINED FROM FERMILAB WEB SITE

This information is provided for REFERENCE use only. Not for MANUFACTURE, or DESIGN INFORMATION. All information contained in this document represents work sponsored by an agency of the U.S. Government. Neither the U.S. Government nor any agency thereof, nor Universities Research Association, Inc., nor any of their employees or officers, makes any warranty, express or implied, or assumes any legal liability or responsibility for the accuracy, completeness, or usefulness of any information, apparatus, product or process disclosed, or represents that its use would not infringe privately owned rights.

NOTES

1. USE 5154 WELDING ROD OR EQUIV.
2. PRESSURE TEST AT 80 PSI AND CHECK FOR LEAKS AFTER WELDING.

REV	DESCRIPTION	DRAWN / APPROVED	DATE
A	ADDED DETAIL H	RLW	06-SEP-2001
		DP/RW	06-SEP-2001
B	1.ADDED ITEM #51 IN BOM AND PLAN VIEW. 2. CHG'D UNISTRUT FROM GREEN TO GALV. FINISH AND FERMI STOCK TO COML IN ITEMS #4,5, 49 & #50.	D.FRIEND	07-JAN-2002
		C.NILA	09-JAN-2002
C	CONFORMED	T.SPERRY	15-AUG-2002
		D.FRIEND	15-AUG-2002

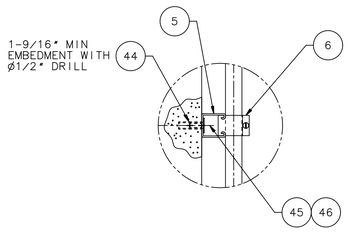

DETAIL A
TYP
SCALE:1/4

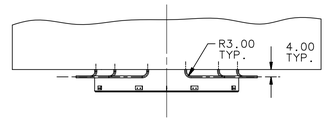

DETAIL E
TOP VIEW DECAY PIPE
TUBING BEND AND CUTTING

DETAIL G
ISOMETRIC VIEW AT
END OD DECAY PIPE

DETAIL H
TYP
SCALE:1/4

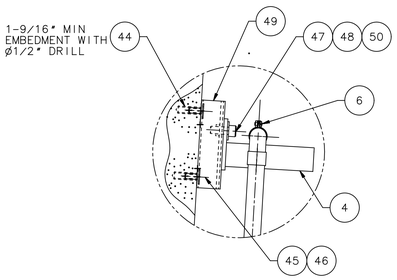

DETAIL B
TYP.
SCALE: 1/4

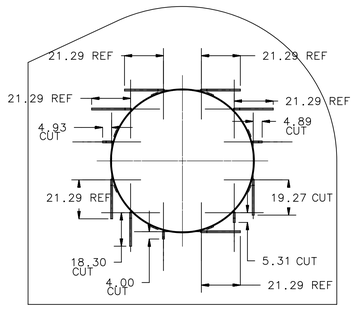

DETAIL F
END VIEW DECAY PIPE
TUBING BEND AND CUTTING

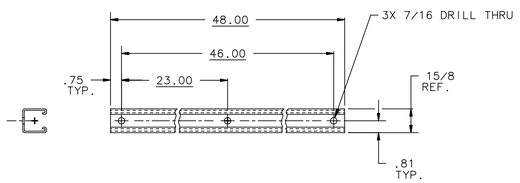

DETAIL C
ITEM NO. 5
SCALE: 1/4

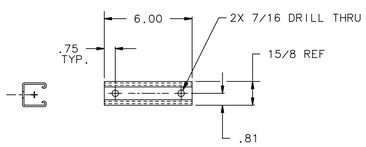

DETAIL D
ITEM NO. 49
SCALE: 1/4

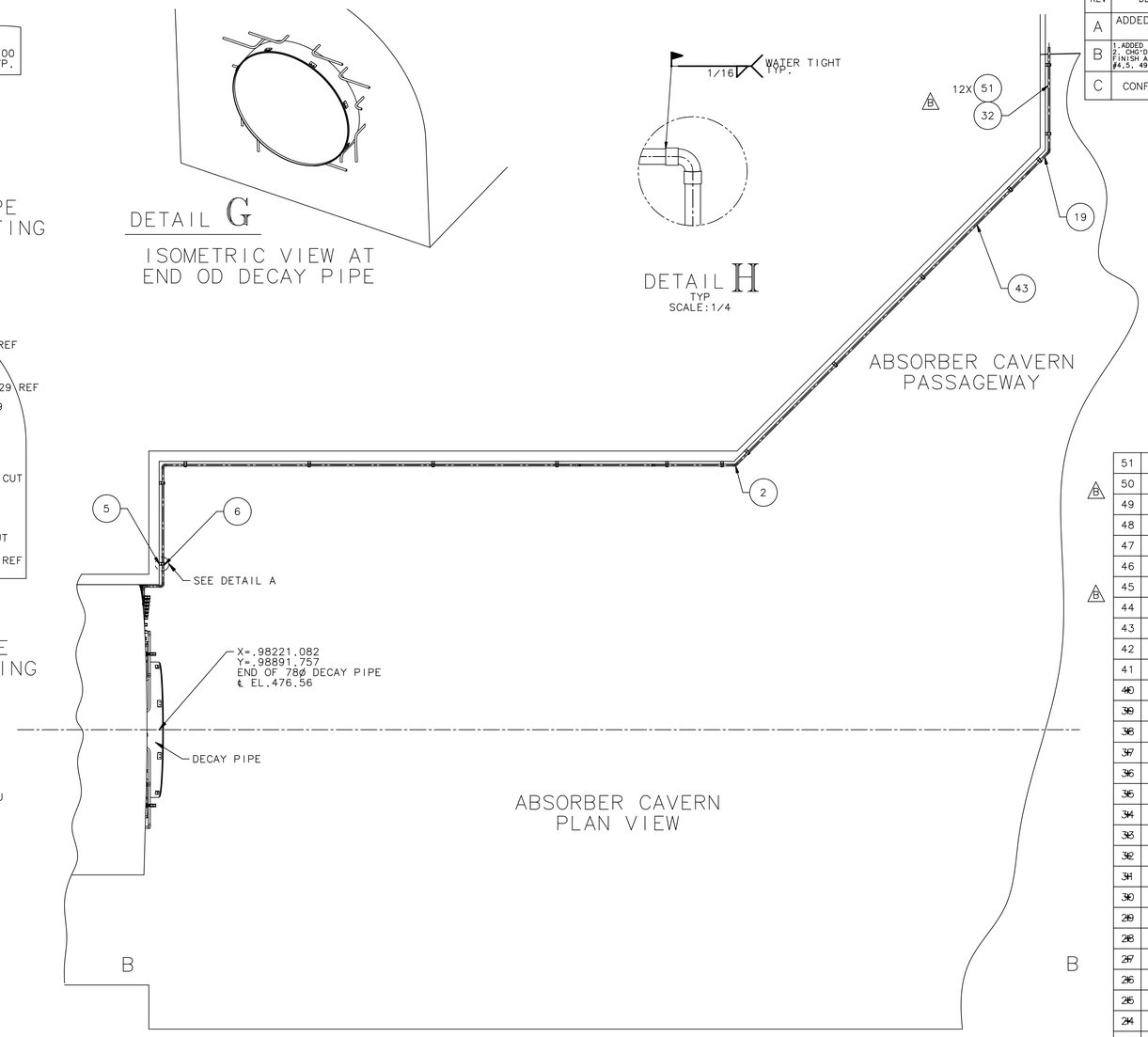

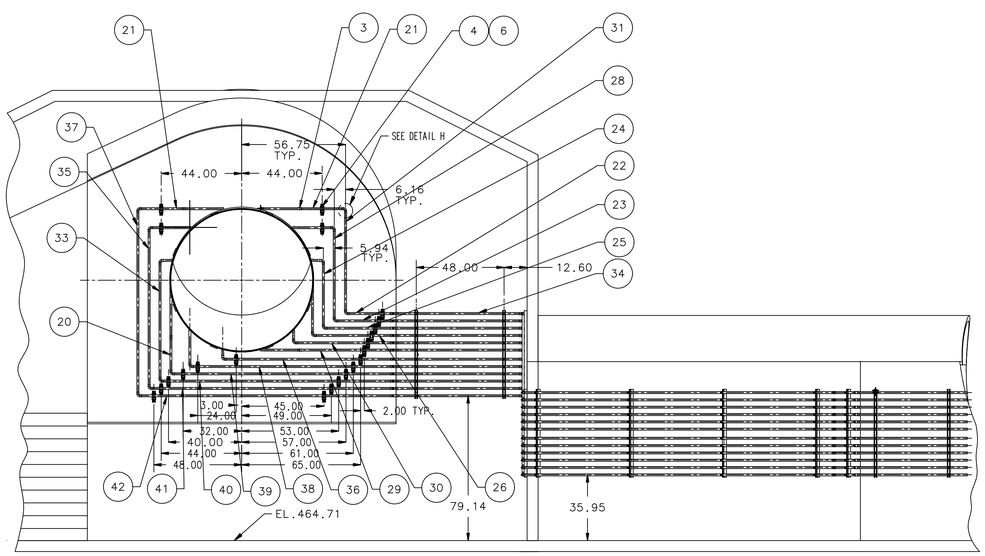

VIEW A-A
UPSTREAM ED OF ABSORBER CAVERN

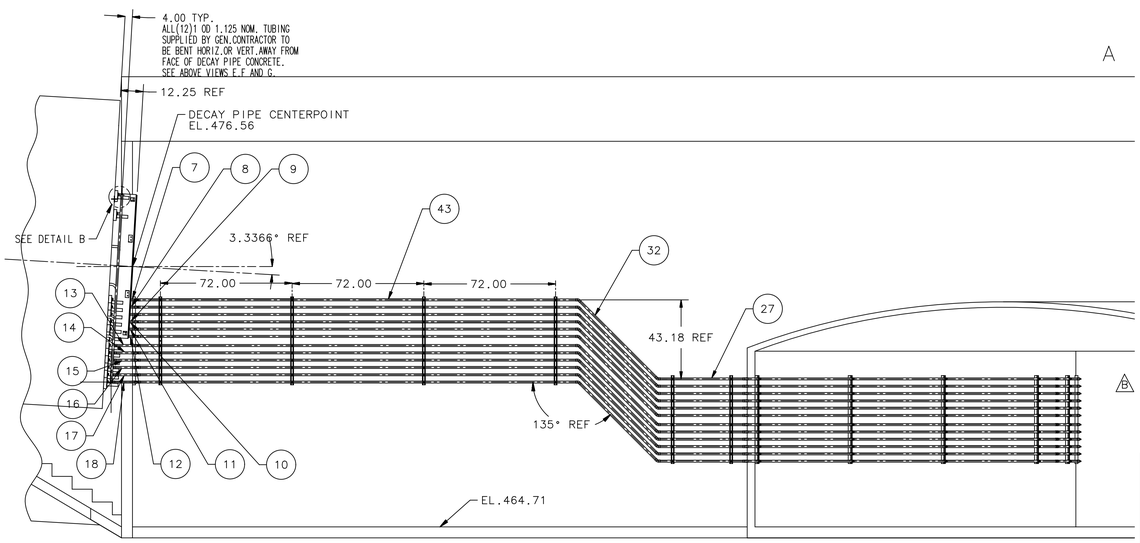

VIEW B-B

ITEM	PART NO.	DESCRIPTION OR SIZE	QTY.
51	COML	1" CAP, COPPER, SWEAT ENDS MUELLER #W-7011	12
50	COML	1/2-13 UNC UNISTRUT NUT WITH SPRING UNISTRUT P/N P1010, GALV. FINISH	22
49	COML	UNISTRUT CHANNEL SERIES P1000 MODIFIED 6.00 LG., GALV. FINISH,SEE DETAIL B	22
48	COML	1/2 FLAT WASHER-SS	22
47	COML	1/2-13 UNC-2A X 1 1/4 LG. SOC HD SCREW-SS	22
46	COML	3/8 FLAT WASHER-SS	202
45	COML	3/8-16 UNC-2A X 1"LG. SOC HD SCREW-SS	202
44	COML	HILTI DROP-IN ANCHOR-HD1 3/8 HILTI P/N 00045753	202
43	COML	TUBING 1 OD NOM. X .065 WALL X 240.00 LG. COPPER SOFT DRAWN TYPE K	24
42	COML	TUBING 1 OD NOM. X .065 WALL X 138.00 LG. COPPER SOFT DRAWN TYPE K	1
41	COML	TUBING 1 OD NOM. X .065 WALL X 131.84 LG. COPPER SOFT DRAWN TYPE K	1
40	COML	TUBING 1 OD NOM. X .065 WALL X 125.90 LG. COPPER SOFT DRAWN TYPE K	+
39	COML	TUBING 1 OD NOM. X .065 WALL X 119.94 LG. COPPER SOFT DRAWN TYPE K	+
38	COML	TUBING 1 OD NOM. X .065 WALL X 109.58 LG. COPPER SOFT DRAWN TYPE K	+
37	COML	TUBING 1 OD NOM. X .065 WALL X 100.25 LG. COPPER SOFT DRAWN TYPE K	+
36	COML	TUBING 1 OD NOM. X .065 WALL X 91.62 LG. COPPER SOFT DRAWN TYPE K	+
35	COML	TUBING 1 OD NOM. X .065 WALL X 85.89 LG. COPPER SOFT DRAWN TYPE K	+
34	COML	TUBING 1 OD NOM. X .065 WALL X 68.31 LG. COPPER SOFT DRAWN TYPE K	162
33	COML	TUBING 1 OD NOM. X .065 WALL X 63.93 LG. COPPER SOFT DRAWN TYPE K	+
32	COML	TUBING 1 OD NOM. X .065 WALL X 60.00 LG. COPPER SOFT DRAWN TYPE K	244
31	COML	TUBING 1 OD NOM. X .065 WALL X 55.27 LG. COPPER SOFT DRAWN TYPE K	+
30	COML	TUBING 1 OD NOM. X .065 WALL X 52.56 LG. COPPER SOFT DRAWN TYPE K	+
29	COML	TUBING 1 OD NOM. X .065 WALL X 50.56 LG. COPPER SOFT DRAWN TYPE K	+
28	COML	TUBING 1 OD NOM. X .065 WALL X 48.90 LG. COPPER SOFT DRAWN TYPE K	+
27	COML	TUBING 1 OD NOM. X .065 WALL X 47.00 LG. COPPER SOFT DRAWN TYPE K	162
26	COML	TUBING 1 OD NOM. X .065 WALL X 42.55 LG. COPPER SOFT DRAWN TYPE K	+
25	COML	TUBING 1 OD NOM. X .065 WALL X 36.60 LG. COPPER SOFT DRAWN TYPE K	+
24	COML	TUBING 1 OD NOM. X .065 WALL X 34.94 LG. COPPER SOFT DRAWN TYPE K	+
23	COML	TUBING 1 OD NOM. X .065 WALL X 30.68 LG. COPPER SOFT DRAWN TYPE K	+
22	COML	TUBING 1 OD NOM. X .065 WALL X 24.50 LG. COPPER SOFT DRAWN TYPE K	+
21	COML	TUBING 1 OD NOM. X .065 WALL X 23.97 LG. COPPER SOFT DRAWN TYPE K	2
20	COML	TUBING 1 OD NOM. X .065 WALL X 18.90 LG. COPPER SOFT DRAWN TYPE K	+
19	COML	TUBING 1 OD NOM. X .065 WALL X 16.62 LG. COPPER SOFT DRAWN TYPE K	162
18	COML	TUBING 1 OD NOM. X .065 WALL X 11.75 LG. COPPER SOFT DRAWN TYPE K	+
17	COML	TUBING 1 OD NOM. X .065 WALL X 11.52 LG. COPPER SOFT DRAWN TYPE K	+
16	COML	TUBING 1 OD NOM. X .065 WALL X 11.29 LG. COPPER SOFT DRAWN TYPE K	+
15	COML	TUBING 1 OD NOM. X .065 WALL X 11.06 LG. COPPER SOFT DRAWN TYPE K	+
14	COML	TUBING 1 OD NOM. X .065 WALL X 10.82 LG. COPPER SOFT DRAWN TYPE K	+
13	COML	TUBING 1 OD NOM. X .065 WALL X 10.59 LG. COPPER SOFT DRAWN TYPE K	+
12	COML	TUBING 1 OD NOM. X .065 WALL X 10.30 LG. COPPER SOFT DRAWN TYPE K	+
11	COML	TUBING 1 OD NOM. X .065 WALL X 10.07 LG. COPPER SOFT DRAWN TYPE K	+
10	COML	TUBING 1 OD NOM. X .065 WALL X 9.84 LG. COPPER SOFT DRAWN TYPE K	+
9	COML	TUBING 1 OD NOM. X .065 WALL X 9.60 LG. COPPER SOFT DRAWN TYPE K	+
8	COML	TUBING 1 OD NOM. X .065 WALL X 9.37 LG. COPPER SOFT DRAWN TYPE K	+
7	COML	TUBING 1 OD NOM. X .065 WALL X 9.14 LG. COPPER SOFT DRAWN TYPE K	+
6	COML	TUBE CLAMP ASSEMBLY P2030 UNISTRUT OR EQ.	242
5	1243+1010	UNISTRUT CHANNEL SERIES P1000 MODIFIED 48.00 LG., GALV. FINISH,SEE DETAIL A	16
4	COML	BRACKET P2513 UNISTRUT OR EQ., GALV. FINISH	262
3	COML	COUPLING 1 SIZE W-3344 BRASS MUELLER BRASS OR EQ.	16
2	COML	ELBOW 1 X 1 X 45° W-3344 BRASS MUELLER BRASS OR EQ.	48
1	COML	ELBOW 1 X 1 X 90° W-2047 BRASS MUELLER BRASS OR EQ.	58

PARTS LIST

UNLESS OTHERWISE SPECIFIED			ORIGINATOR	D.PUSHKA	03/AUG-2001
.XX	.XXX	ANGLES	DRAWN	D.FRIEND	03/AUG-2001
± .06	± ---	± 1°	CHECKED	D.FRIEND	03-AUG-2001
			APPROVED	D.PUSHKA	31-AUG-2001

1. BREAK ALL SHARP EDGES .015 MAX.
2. DO NOT SCALE DRAWING.
3. DIMENSIONS BASED UPON ANSI Y14.5M-1982
4. MAX. ALL MACH. SURFACES 125

USED ON

MATERIAL
SEE PARTS LIST ABOVE

FERMI NATIONAL ACCELERATOR LABORATORY
UNITED STATES DEPARTMENT OF ENERGY

PPD/MECHANICAL DEPT.
HADRON BEAM ABSORBER
DECAY PIPE COOLING TUBE ROUTING

SCALE	DRAWING NUMBER	SHEET	REV
1/32	8875.114-ME-406347	1 OF 1	C

CREATED WITH : Ideas9m3 GROUP: PPD/MECHANICAL DEPARTMENT

REV	DESCRIPTION	DRAWN	DATE
		APPROVED	DATE

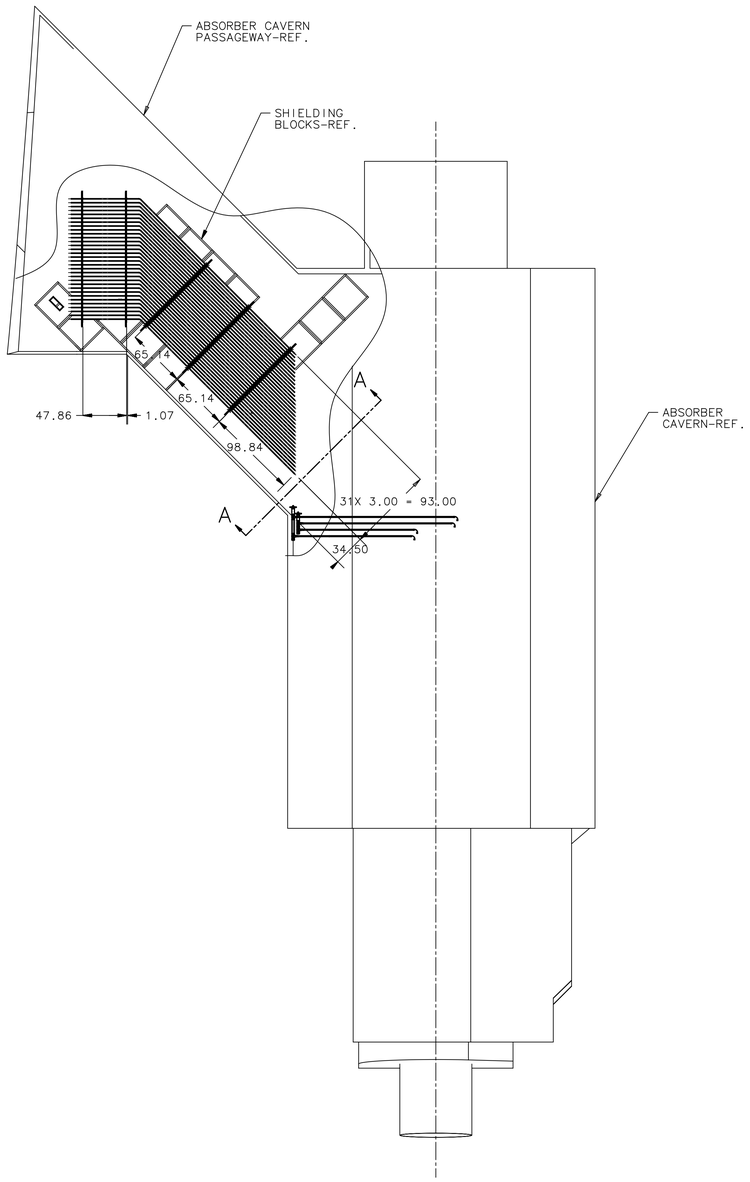

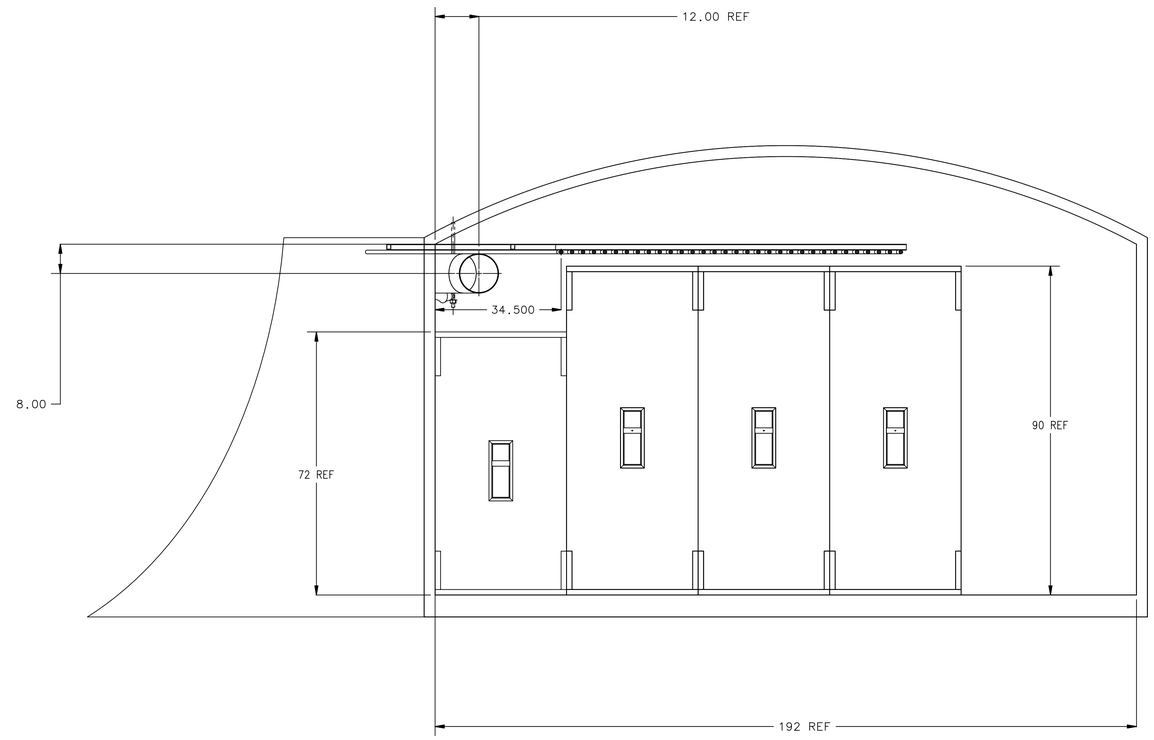

VIEW A-A
ABSORBER CAVERN
PASSAGEWAY

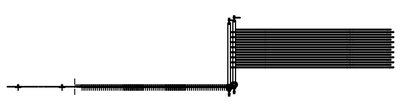

ITEM	PART NO.	DESCRIPTION OR SIZE	QTY.
3	COML	UNISTRUT TUBING CLAMP P2030-STEEL	160
2	1241+1010	UNISTRUT CHANNEL P1000 X 96.00 LG.-STEEL	5
1	MD-X*XXXX	TUBING 1 OD+X .125 WALL	32

PARTS LIST

UNLESS OTHERWISE SPECIFIED			ORIGINATOR	D.PUSHKA	26-NOV-2001
FRACTIONS	DECIMALS	ANGLES	DRAWN	R.WILLIAMS	26-NOV-2001
± 1/16	± .015	± 1°	CHECKED		
			APPROVED		

1. BREAK ALL SHARP EDGES .015 MAX.
2. DO NOT SCALE DRAWING.
3. DIMENSIONS BASED UPON ANSI Y14.5M-1982
4. MAX. ALL MACH. SURFACES 125

USED ON

MATERIAL

FERMI NATIONAL ACCELERATOR LABORATORY
UNITED STATES DEPARTMENT OF ENERGY

PPD/MECHANICAL DEPT.
HADRON BEAM ABSORBER
CORE COOLING ASSY

SCALE	DRAWING NUMBER	SHEET	REV
1/64	8875.114-ME-406519	1 OF 2	

CREATED WITH : ideas9m3 GROUP: PPD/MECHANICAL DEPARTMENT

REV	DESCRIPTION	DRAWN	DATE
		APPROVED	DATE
A	8X 3.00 WAS 16X 4.00, 71.50 WAS 69.00, 2.00 WAS (2.00). ADDED 7X 3.00.	J.MULVEY	12-JAN-2004
		C.GRIMM	16-JAN-2004

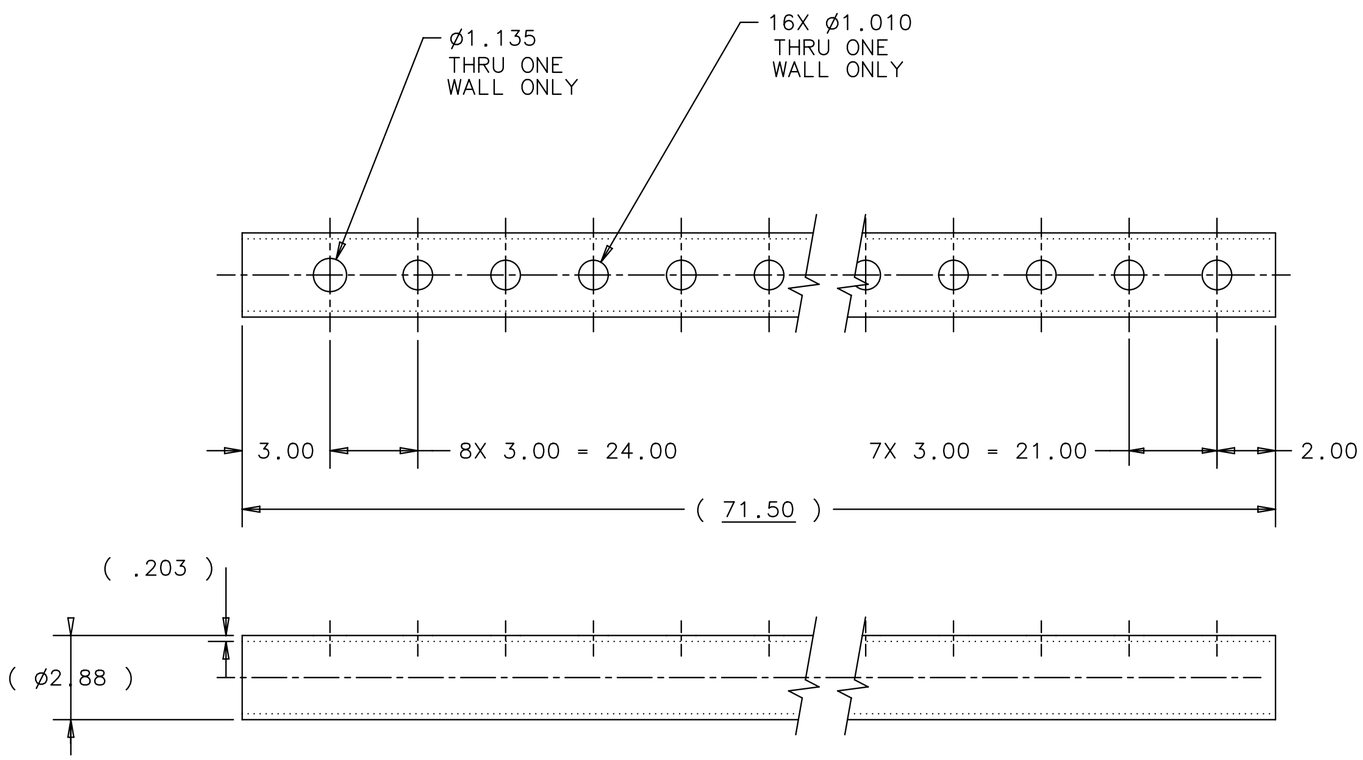

UNLESS OTHERWISE SPECIFIED			ORIGINATOR	D.PUSHKA	02-OCT-2003
.XX	.XXX	ANGLES	DRAWN	D.FRIEND	02-OCT-2003
± .03	± .005	± 1°	CHECKED	C.GRIMM	23-OCT-2003
			APPROVED	D.PUSHKA	29-OCT-2003

1. BREAK ALL SHARP EDGES .015 MAX.
2. DO NOT SCALE DRAWING.
3. DIMENSIONS BASED UPON ANSI Y14.5M-1982
4. MAX. ALL MACH. SURFACES 125
5. DRAWING UNITS: U.S. INCH

USED ON: MC-431468

MATERIAL: 6061-T6 ALUMINUM ø2-1/2" SCH. 40 PIPE

FERMI NATIONAL ACCELERATOR LABORATORY
UNITED STATES DEPARTMENT OF ENERGY

PPD/MECHANICAL DEPARTMENT
NUMI ABSORBER BY-PASS TUNNEL
ABSORBER MANIFOLD PIPE

SCALE	DRAWING NUMBER	SHEET	REV
1/4	8875.117-MC-431467	1 OF 1	B

CREATED WITH : Ideas12NXSeries | GROUP: TD/DDCIS-DESIGN-COMPUTING

REV	DESCRIPTION	DRAWN	DATE
		APPROVED	DATE
A	(81.00) WAS (77.94), (3.00) WAS (4.00). ADDED (63.50) & (21.00) DIMENSIONS. LENGTH OF ITEM 6, 2.44 WAS 2.25, LENGTH OF ITEM 5, 2.00 WAS 1.50. REVISED DRAWING PICTORIALLY TO REFLECT CHANGES TO ITEM 1.	J.MULVEY	12-JAN-2004
		C.GRIMM	16-JAN-2004

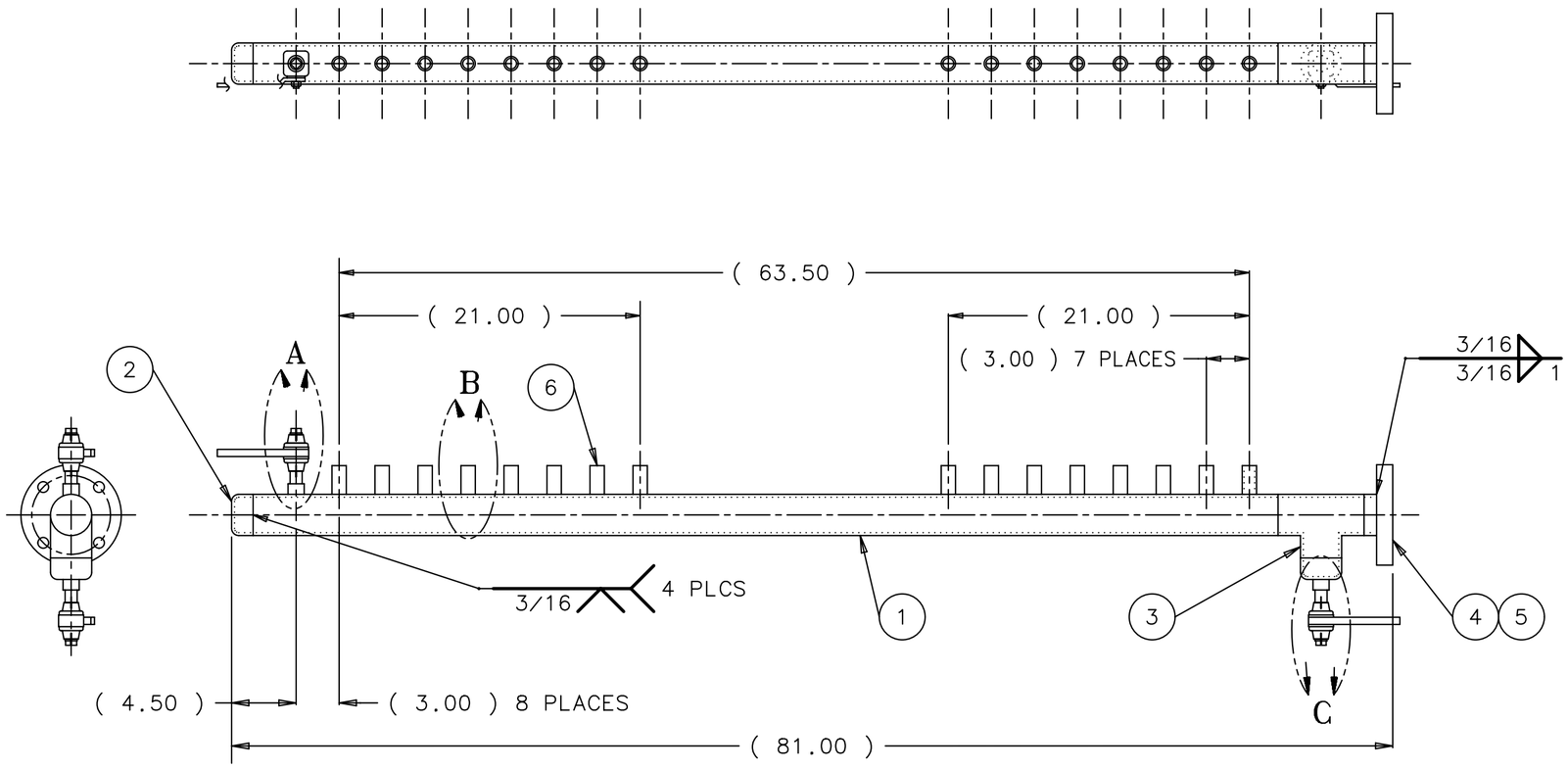

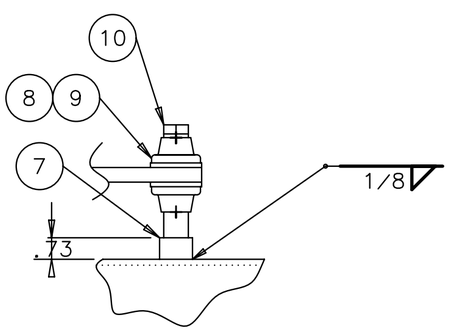

DETAIL A
SCALE: 1/4

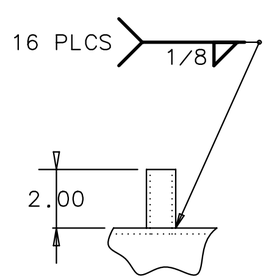

DETAIL B
SCALE: 1/4

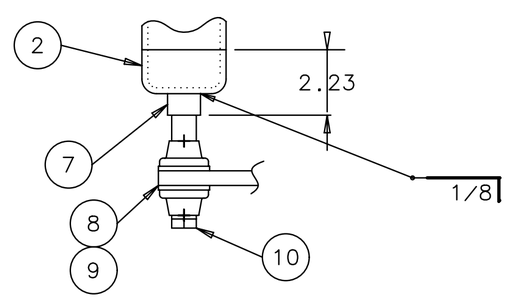

DETAIL C
SCALE: 1/4

ITEM	PART NO.	DESCRIPTION OR SIZE	QTY.
10	COML	1/2" PIPE PLUG, SQUARE HEAD ALUMINUM	2
9	COML	1/2" PIPE NIPPLE, 2.00 LG. ALUMINUM	2
8	COML	1/2" BALL VALVE, THREADED ENDS ALUMINUM, MCMASTER CARR #3774K12	2
7	COML	1/2" THREADED HALF COUPLING ALUMINUM	2
6	COML	1.00" O.D. TUBE, .125 WALL THICKNESS 2.44 LG., ALUMINUM 6061-T6	16
5	COML	ø2-1/2" SCH. 40 PIPE X 2.00 LG. ALUMINUM	1
4	COML	2-1/2"-150# R.F.S.O. FLANGE ALUMINUM	1
3	COML	2-1/2" PIPE TEE, B.W. ENDS SCH. 40, ALUMINUM	1
2	COML	2-1/2" PIPE CAP, B.W. ENDS SCH. 40, ALUMINUM	2
1	MC-431467	ABSORBER MANIFOLD	1

PARTS LIST

UNLESS OTHERWISE SPECIFIED			ORIGINATOR	D.PUSHKA	02-OCT-2003
.XX	.XXX	ANGLES	DRAWN	D.FRIEND	02-OCT-2003
± .06	± ---	± 1°	CHECKED	C.GRIMM	23-OCT-2003
			APPROVED	D.PUSHKA	13-NOV-2003

1. BREAK ALL SHARP EDGES .015 MAX.
2. DO NOT SCALE DRAWING.
3. DIMENSIONS BASED UPON ANSI Y14.5M-1982
4. MAX. ALL MACH. SURFACES 125
5. DRAWING UNITS: U.S. INCH

USED ON: ME-431469

MATERIAL: SEE PARTS LIST ABOVE

FERMI NATIONAL ACCELERATOR LABORATORY
UNITED STATES DEPARTMENT OF ENERGY

PPD/MECHANICAL DEPARTMENT
NUMI ABSORBER BY-PASS TUNNEL
ABSORBER MANIFOLD ASSEMBLY

SCALE	DRAWING NUMBER	SHEET	REV
1/8 & AS NOTED	8875.117-MC-431468	1 OF 1	B

CREATED WITH : Ideas12NXSeries | GROUP: TD/DDCIS-DESIGN-COMPUTING

NOTE:

1. ASSEMBLY SHALL BE HYDROSTATICLY TESTED AT 60PSI FOR 60 MINUTES.

REV	DESCRIPTION	DRAWN	DATE
		APPROVED	DATE

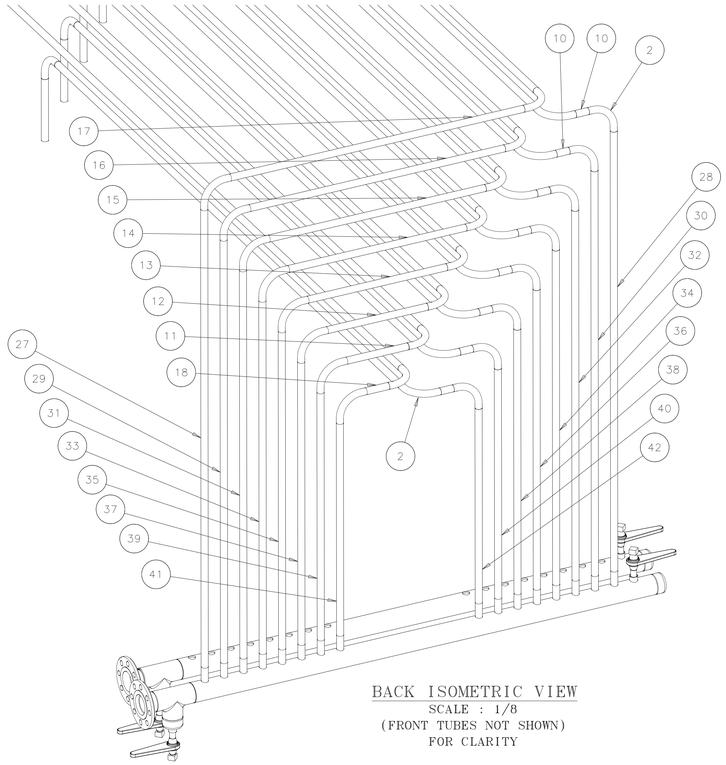

BACK ISOMETRIC VIEW
SCALE : 1/8
(FRONT TUBES NOT SHOWN)
FOR CLARITY

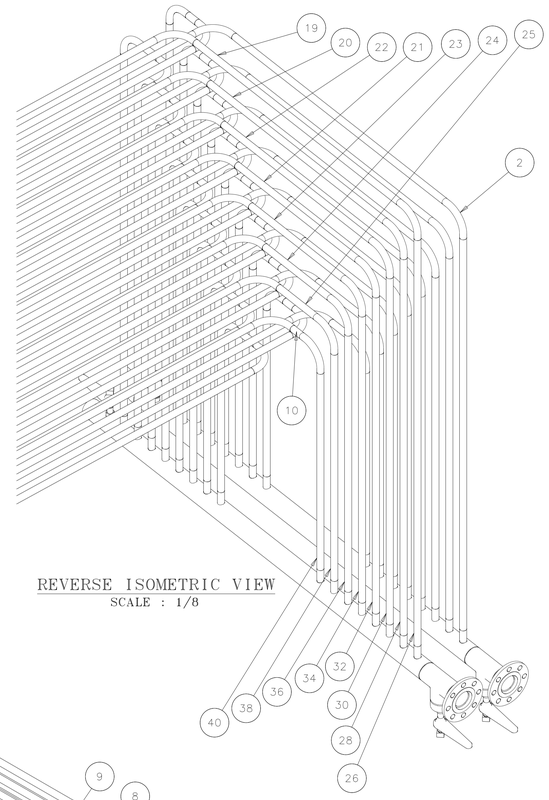

REVERSE ISOMETRIC VIEW
SCALE : 1/8

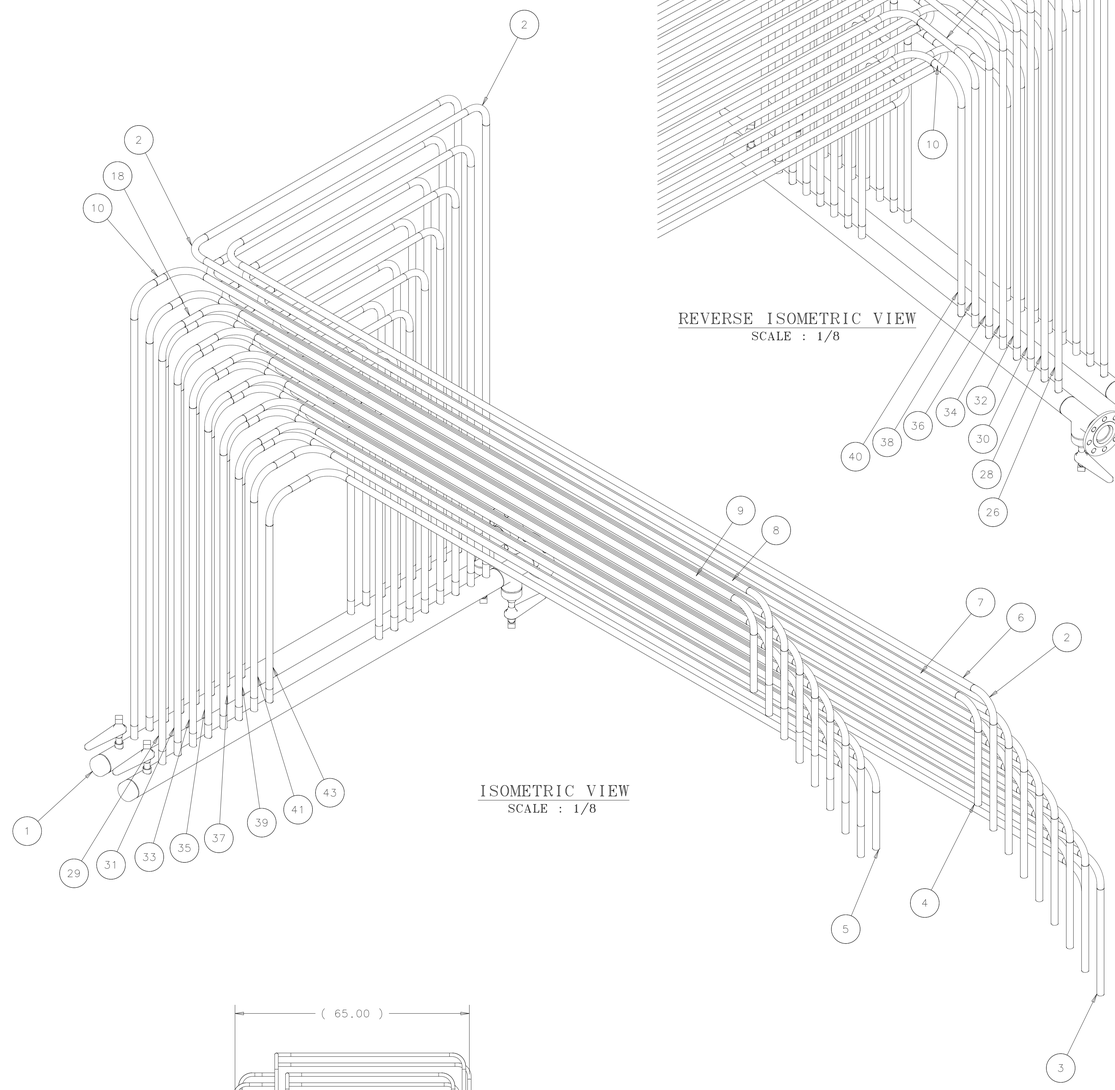

ISOMETRIC VIEW
SCALE : 1/8

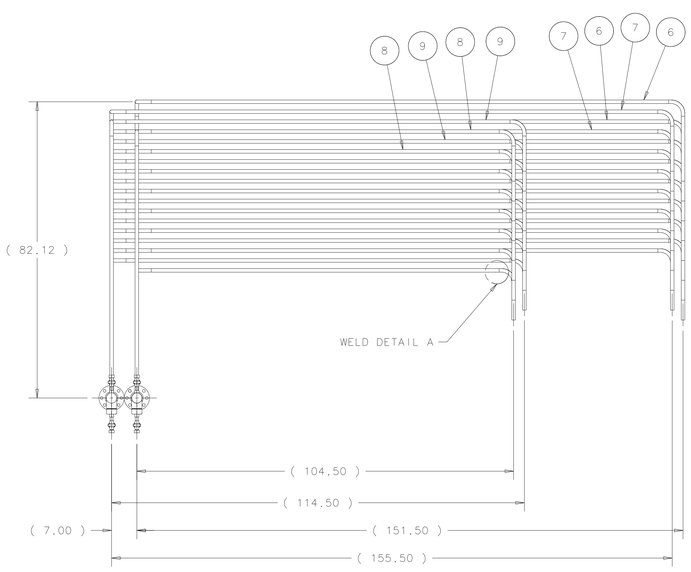

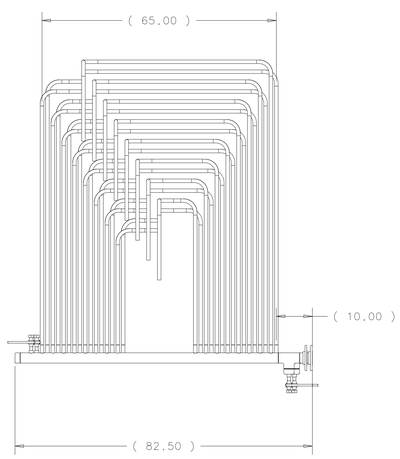

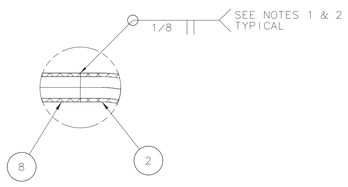

ELBOW TO TUBING
WELD DETAIL A

NOTES
1. USE 5154 WELDING ROD OR EQUIV.
2. PRESSURE TEST AT 80 PSI AND CHECK FOR LEAKS AFTER WELDING.

ITEM	PART NO.	DESCRIPTION OR SIZE	QTY.
43	COM'L	ALUMINUM ROUND TUBING 6061-T6 1 O.D. X .125 WALL X 27.75 LG.	1
42	COM'L	ALUMINUM ROUND TUBING 6061-T6 1 O.D. X .125 WALL X 30.50 LG.	1
41	COM'L	ALUMINUM ROUND TUBING 6061-T6 1 O.D. X .125 WALL X 33.25 LG.	2
40	COM'L	ALUMINUM ROUND TUBING 6061-T6 1 O.D. X .125 WALL X 36.00 LG.	2
39	COM'L	ALUMINUM ROUND TUBING 6061-T6 1 O.D. X .125 WALL X 38.75 LG.	2
38	COM'L	ALUMINUM ROUND TUBING 6061-T6 1 O.D. X .125 WALL X 41.50 LG.	2
37	COM'L	ALUMINUM ROUND TUBING 6061-T6 1 O.D. X .125 WALL X 44.25 LG.	2
36	COM'L	ALUMINUM ROUND TUBING 6061-T6 1 O.D. X .125 WALL X 47.00 LG.	2
35	COM'L	ALUMINUM ROUND TUBING 6061-T6 1 O.D. X .125 WALL X 49.75 LG.	2
34	COM'L	ALUMINUM ROUND TUBING 6061-T6 1 O.D. X .125 WALL X 52.50 LG.	2
33	COM'L	ALUMINUM ROUND TUBING 6061-T6 1 O.D. X .125 WALL X 55.25 LG.	2
32	COM'L	ALUMINUM ROUND TUBING 6061-T6 1 O.D. X .125 WALL X 58.00 LG.	2
31	COM'L	ALUMINUM ROUND TUBING 6061-T6 1 O.D. X .125 WALL X 60.75 LG.	2
30	COM'L	ALUMINUM ROUND TUBING 6061-T6 1 O.D. X .125 WALL X 63.50 LG.	2
29	COM'L	ALUMINUM ROUND TUBING 6061-T6 1 O.D. X .125 WALL X 66.25 LG.	2
28	COM'L	ALUMINUM ROUND TUBING 6061-T6 1 O.D. X .125 WALL X 69.00 LG.	2
27	COM'L	ALUMINUM ROUND TUBING 6061-T6 1 O.D. X .125 WALL X 71.75 LG.	1
26	COM'L	ALUMINUM ROUND TUBING 6061-T6 1 O.D. X .125 WALL X 74.50 LG.	1
25	COM'L	ALUMINUM ROUND TUBING 6061-T6 1 O.D. X .125 WALL X 8.00 LG.	1
24	COM'L	ALUMINUM ROUND TUBING 6061-T6 1 O.D. X .125 WALL X 14.00 LG.	1
23	COM'L	ALUMINUM ROUND TUBING 6061-T6 1 O.D. X .125 WALL X 20.00 LG.	1
22	COM'L	ALUMINUM ROUND TUBING 6061-T6 1 O.D. X .125 WALL X 32.00 LG.	1
21	COM'L	ALUMINUM ROUND TUBING 6061-T6 1 O.D. X .125 WALL X 26.00 LG.	1
20	COM'L	ALUMINUM ROUND TUBING 6061-T6 1 O.D. X .125 WALL X 38.00 LG.	1
19	COM'L	ALUMINUM ROUND TUBING 6061-T6 1 O.D. X .125 WALL X 44.00 LG.	1
18	COM'L	ALUMINUM ROUND TUBING 6061-T6 1 O.D. X .125 WALL X 3.50 LG.	9
17	COM'L	ALUMINUM ROUND TUBING 6061-T6 1 O.D. X .125 WALL X 45.50 LG.	1
16	COM'L	ALUMINUM ROUND TUBING 6061-T6 1 O.D. X .125 WALL X 39.50 LG.	1
15	COM'L	ALUMINUM ROUND TUBING 6061-T6 1 O.D. X .125 WALL X 33.50 LG.	1
14	COM'L	ALUMINUM ROUND TUBING 6061-T6 1 O.D. X .125 WALL X 27.50 LG.	1
13	COM'L	ALUMINUM ROUND TUBING 6061-T6 1 O.D. X .125 WALL X 21.50 LG.	1
12	COM'L	ALUMINUM ROUND TUBING 6061-T6 1 O.D. X .125 WALL X 15.50 LG.	1
11	COM'L	ALUMINUM ROUND TUBING 6061-T6 1 O.D. X .125 WALL X 9.50 LG.	1
10	COM'L	ALUMINUM ROUND TUBING 6061-T6 1 O.D. X .125 WALL X 2.00 LG.	9
9	COM'L	ALUMINUM ROUND TUBING 6061-T6 1 O.D. X .125 WALL X 106.50 LG.	8
8	COM'L	ALUMINUM ROUND TUBING 6061-T6 1 O.D. X .125 WALL X 96.50 LG.	8
7	COM'L	ALUMINUM ROUND TUBING 6061-T6 1 O.D. X .125 WALL X 147.50 LG.	8
6	COM'L	ALUMINUM ROUND TUBING 6061-T6 1 O.D. X .125 WALL X 143.50 LG.	8
5	COM'L	ALUMINUM ROUND TUBING 6061-T6 1 O.D. X .125 WALL X 9.75 LG.	16
4	COM'L	ALUMINUM ROUND TUBING 6061-T6 1 O.D. X .125 WALL X 12.50 LG.	8
3	COM'L	ALUMINUM ROUND TUBING 6061-T6 1 O.D. X .125 WALL X 18.00 LG.	8
2	COM'L	ALUMINUM 90° WELDED ELBOW 6061-T6 1 O.D. X .125 WALL	96
1	MC-431468	CORE COOLING MANIFOLD ASSY	2

PARTS LIST

UNLESS OTHERWISE SPECIFIED			ORIGINATOR	E.VILLEGAS	16-JAN-2004
.XX	.XXX	ANGLES	DRAWN	G.SMITH	23-JAN-2004
± .06	± ---	± ---	CHECKED	C.GRIMM	11-MAR-2004
			APPROVED	E.VILLEGAS	09-APR-2004
			USED ON	ME-427127	
			MATERIAL	SEE PARTS LIST ABOVE	

1. BREAK ALL SHARP EDGES .015 MAX.
2. DO NOT SCALE DRAWING.
3. DIMENSIONS BASED UPON ASME Y14.5M-1994.
4. ALL DIMENSIONS ARE INCHES
5. MAX. ALL MACH. SURFACES ---√

FERMI NATIONAL ACCELERATOR LABORATORY
UNITED STATES DEPARTMENT OF ENERGY

PPD/MECHANICAL DEPARTMENT
NUMI HADRON BEAM ABSORBER
CORE COOLING ASSEMBLY

SCALE	DRAWING NUMBER	SHEET	REV
1/16 & NOTED	8875.114-ME-431708	1 OF 1	

CREATED WITH : Ideas9m3 GROUP: PPD/MECHANICAL DEPARTMENT

NOTICE: IMAGE OBTAINED FROM FERMILAB WEB SITE

This information is provided for REFERENCE use only. Not for MANUFACTURE, or DESIGN INFORMATION. All information contained in this document represents work sponsored by an agency of the U.S. Government. Neither the U.S. Government nor any agency thereof, nor Universities Research Association, Inc., nor any of their employees or officers, makes any warranty, express or implied, or assumes any legal liability or responsibility for the accuracy, completeness, or usefulness of any information, apparatus, product or process disclosed, or represents that its use would not infringe privately owned rights.

REV	DESCRIPTION	DRAWN	DATE
		APPROVED	DATE
A	UPDATED	G SMITH	12-JAN-2007
		G SMITH	17-JAN-2007

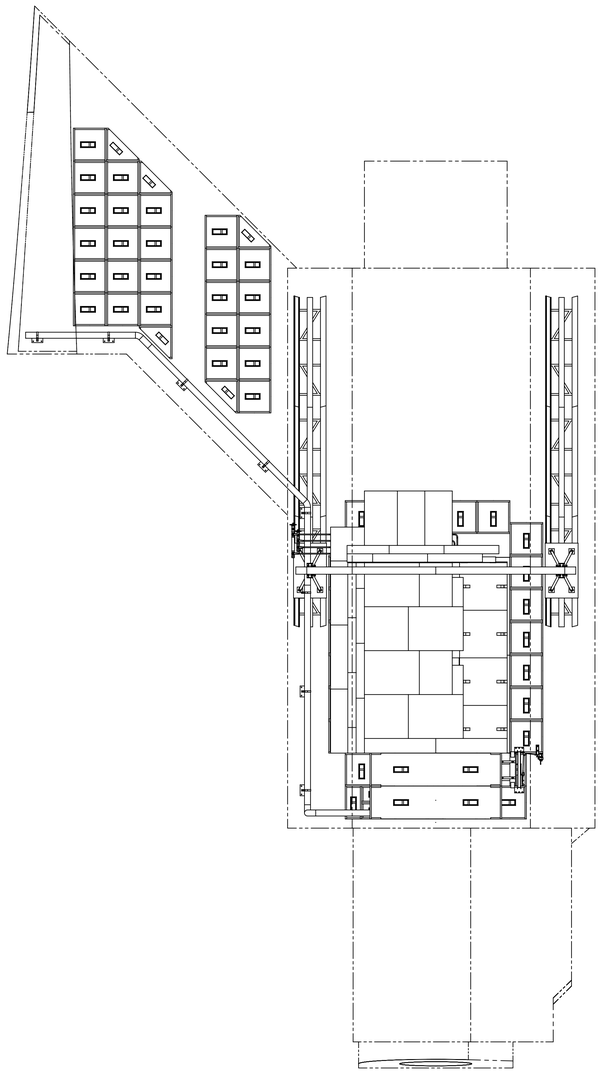

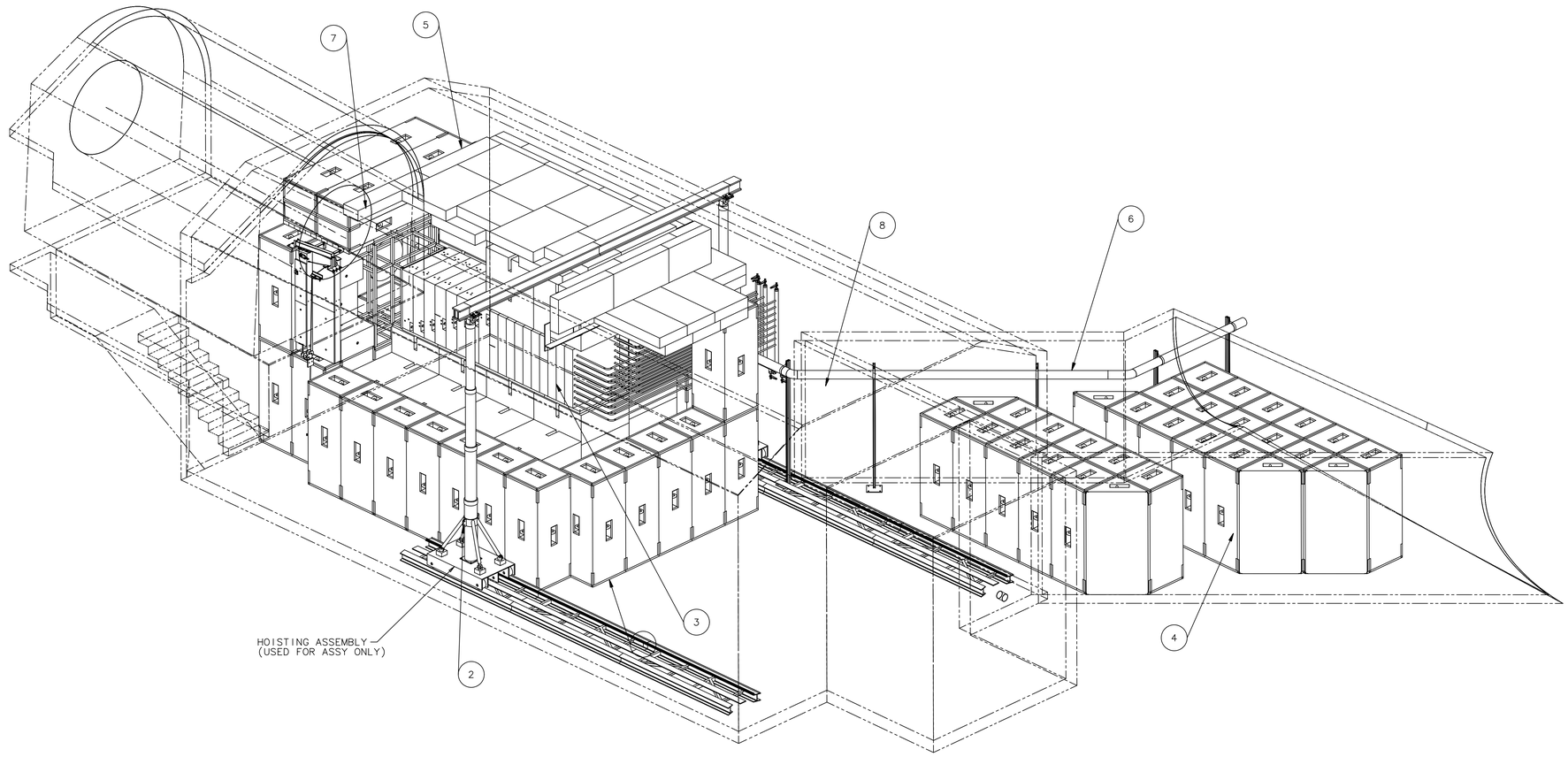

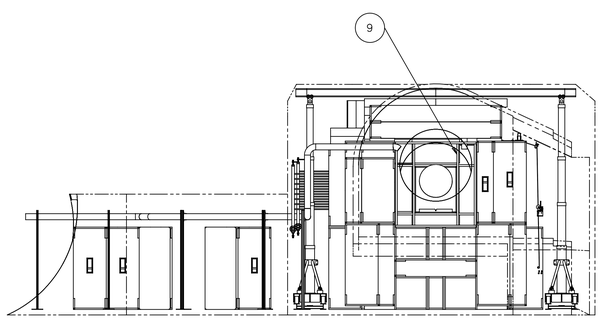

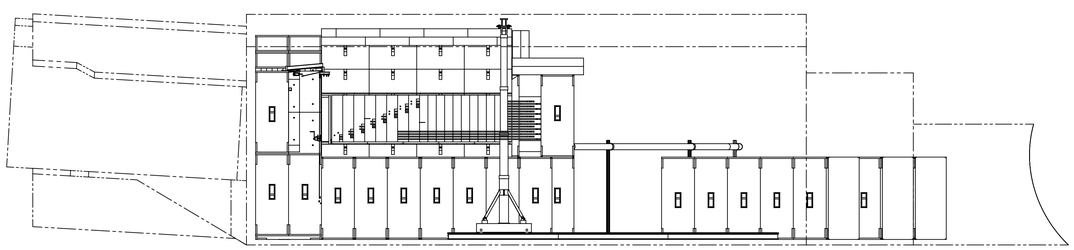

ITEM	PART NO.	DESCRIPTION OR SIZE	QTY.
9	ME-433147	AIR DISPLACEMENT BOX FRAME	1
8	ME-406347	DECAY PIPE COOLING TUBE ROUTING	1
7	ME-406886	DECAY PIPE EXT INSTALL ASSY D.S.	1
6	ME-406519	CORE COOLING ASSEMBLY	1
5	ME-431220	VACUUM PUMP OUT ASSY	1
4	ME-427	ABSORBER CAVERN PASSAGEWAY SHIELDING ASSY	1
3	ME-427127	CORE WELDMENT ASSY	1
2	ME-427337	STEEL SHIELDING ASSY	1
1	ME-427334	CONCRETE SHIELDING ASSY	1

PARTS LIST

UNLESS OTHERWISE SPECIFIED			ORIGINATOR	E.VILLEGAS	13-MAR-2003
.XX	.XXX	ANGLES	DRAWN	G.SMITH	13-MAR-2003
±	±	± 1°	CHECKED		
			APPROVED		

1. BREAK ALL SHARP EDGES .015 MAX.
2. DO NOT SCALE DRAWING.
3. DIMENSIONS BASED UPON ANSI Y14.5M-1982
4. ALL DIMENSIONS ARE INCHES
5. MAX. ALL MACH. SURFACES 125

USED ON: NUMI BEAMLINE

MATERIAL: SEE PARTS LIST ABOVE

FERMI NATIONAL ACCELERATOR LABORATORY
UNITED STATES DEPARTMENT OF ENERGY

PPD/MECHANICAL DEPT.
NUMI HADRON BEAM ABSORBER
ABSORBER CAVERN GENERAL LAYOUT

SCALE	DRAWING NUMBER	SHEET	REV
1/64 & NOTED	8875.114-ME-427776	1 OF 1	

CREATED WITH : ideas9m3 GROUP: PPD/MECHANICAL DEPARTMENT