Fermilab

Managed by Fermi Research Alliance, LLC for the U.S. Department of Energy Office of Science

NUMI Horn-1 Module Modification

Vladimir Sidorov

21 August 2020

NUMI Horn-1 Module drive mechanisms

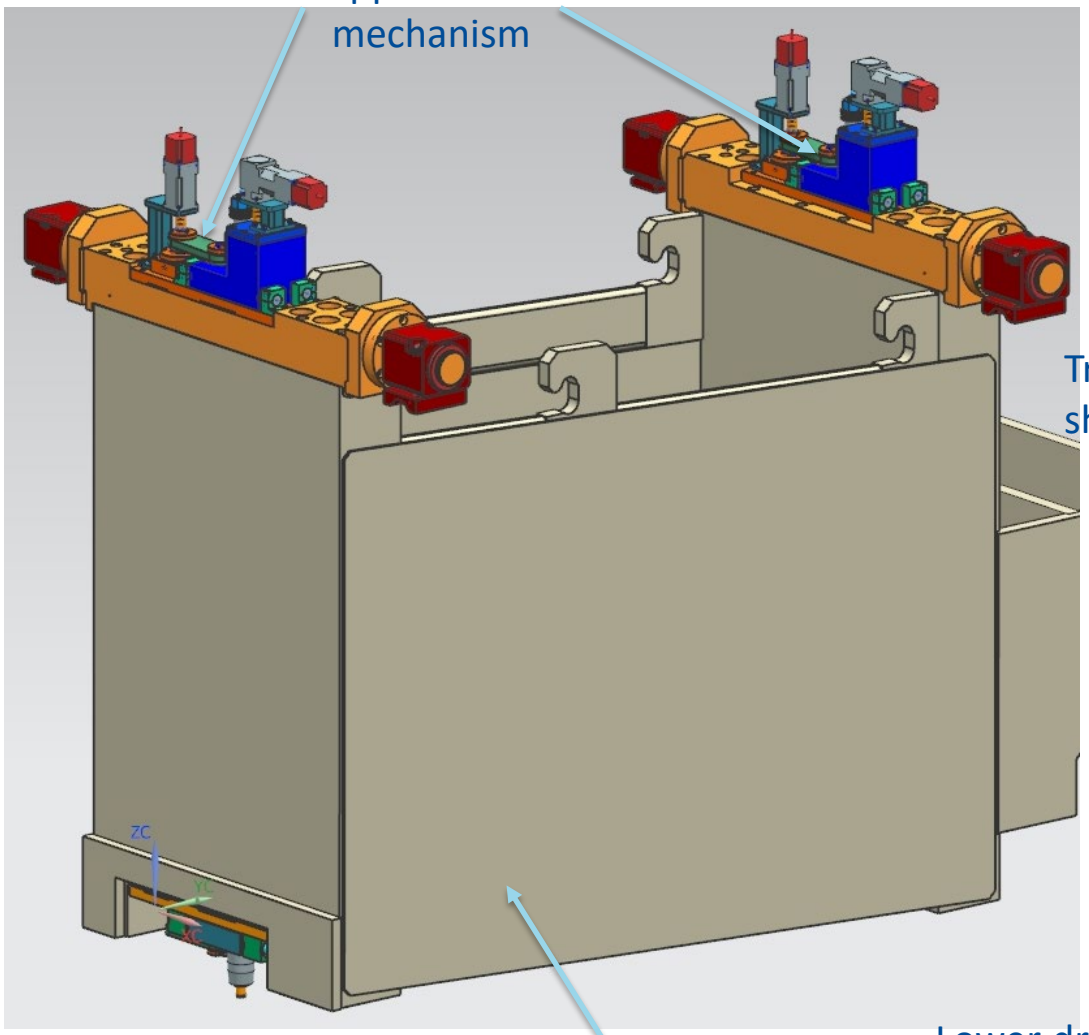

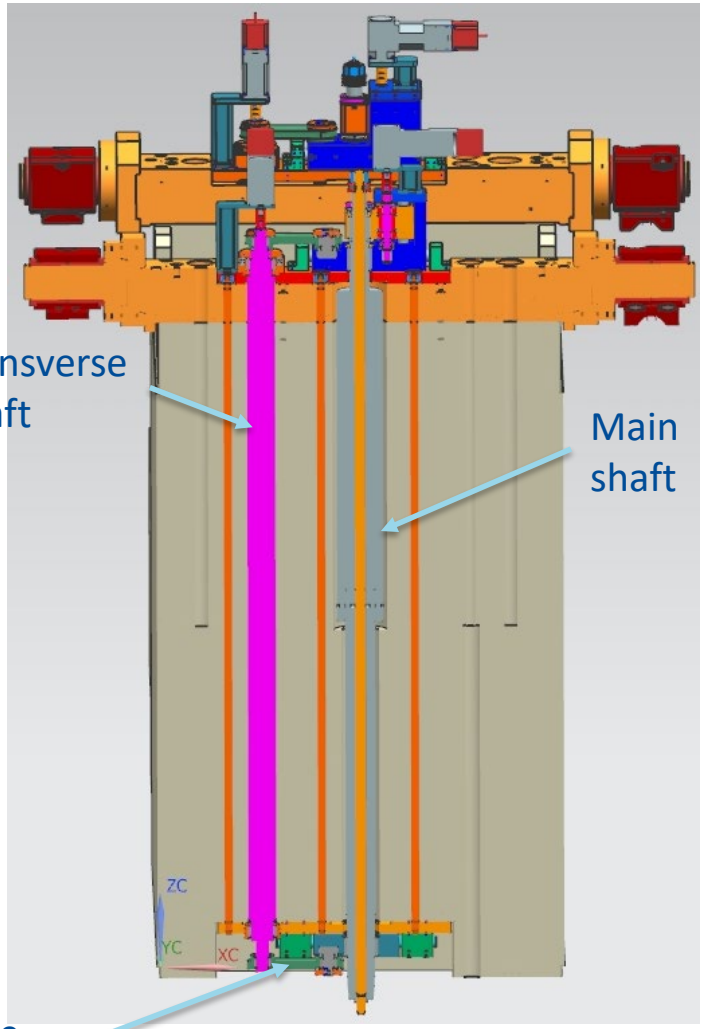

Upper drive mechanism condition

Transverse shaft

Main shaft

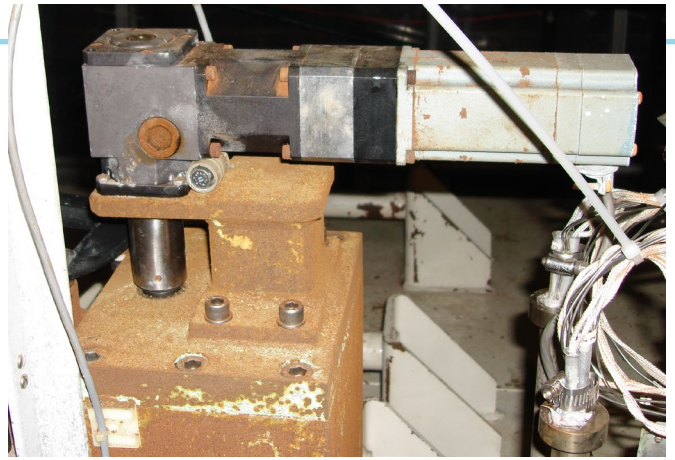

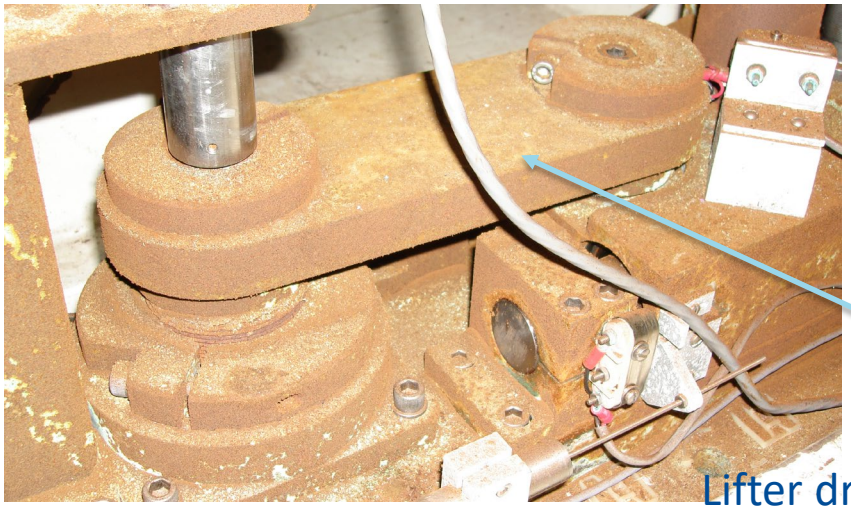

Link

Lifter drive shaft

Upper drive mechanism

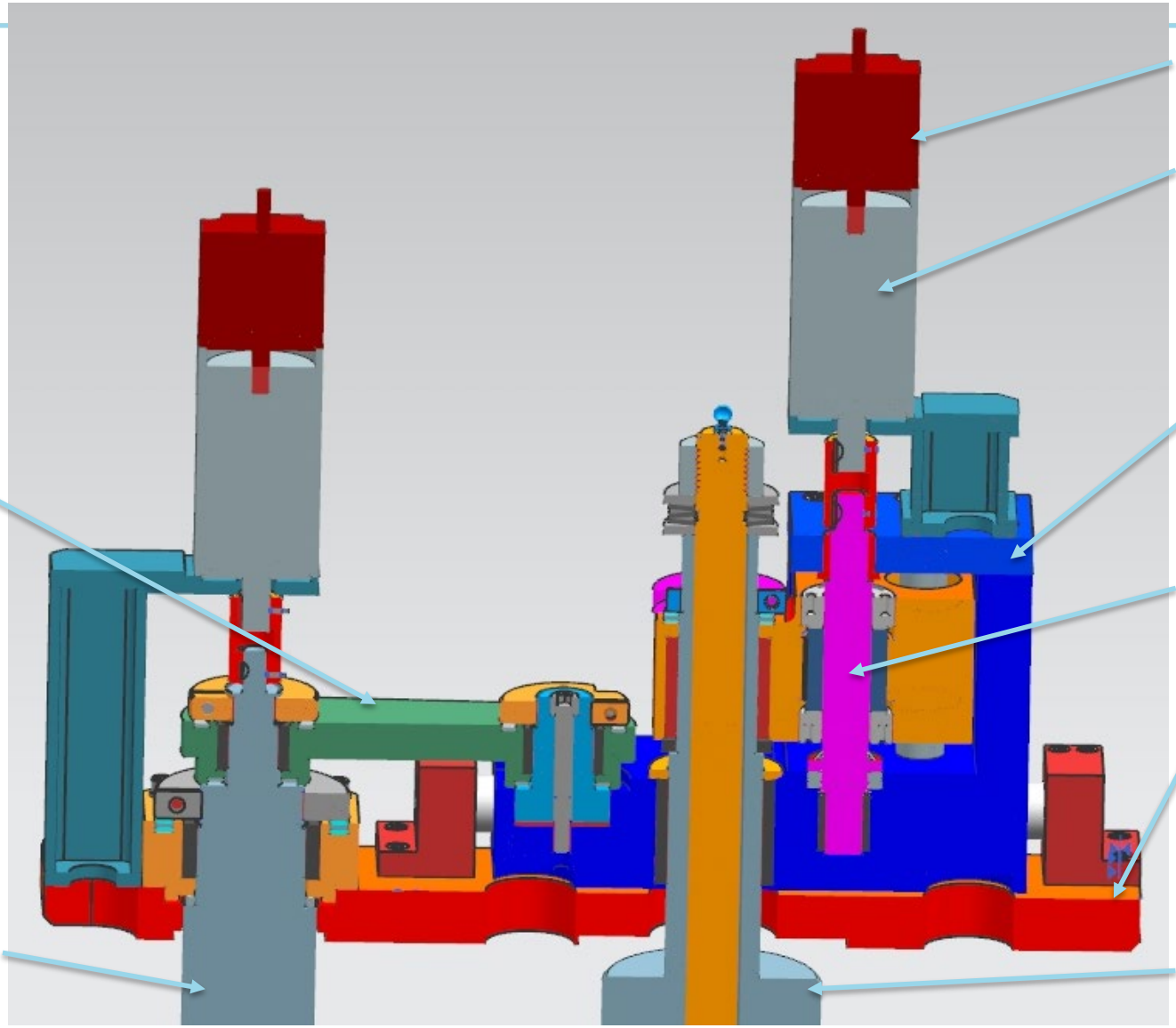

Lower drive mechanism

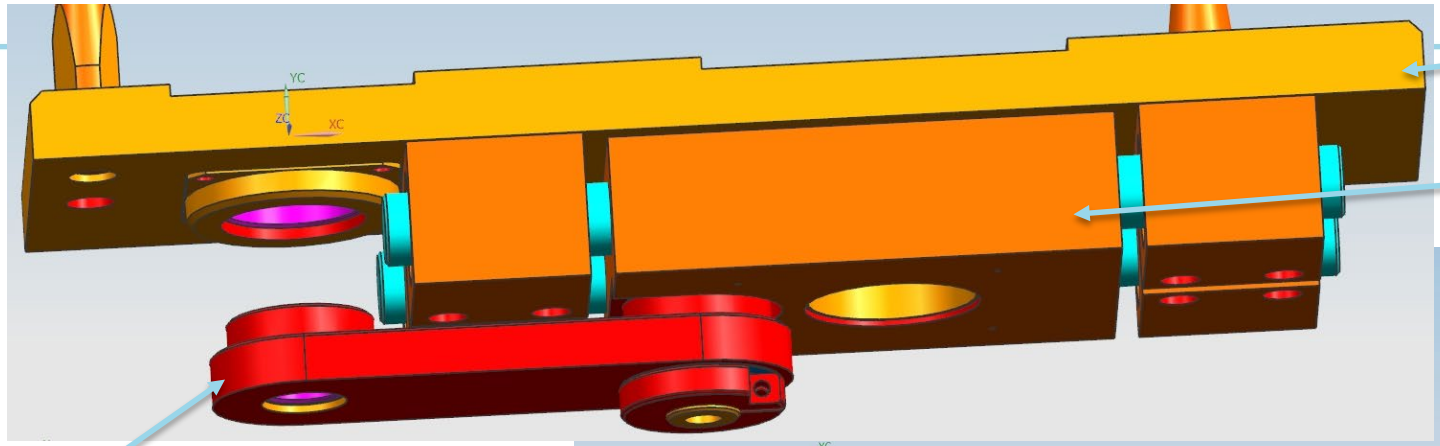

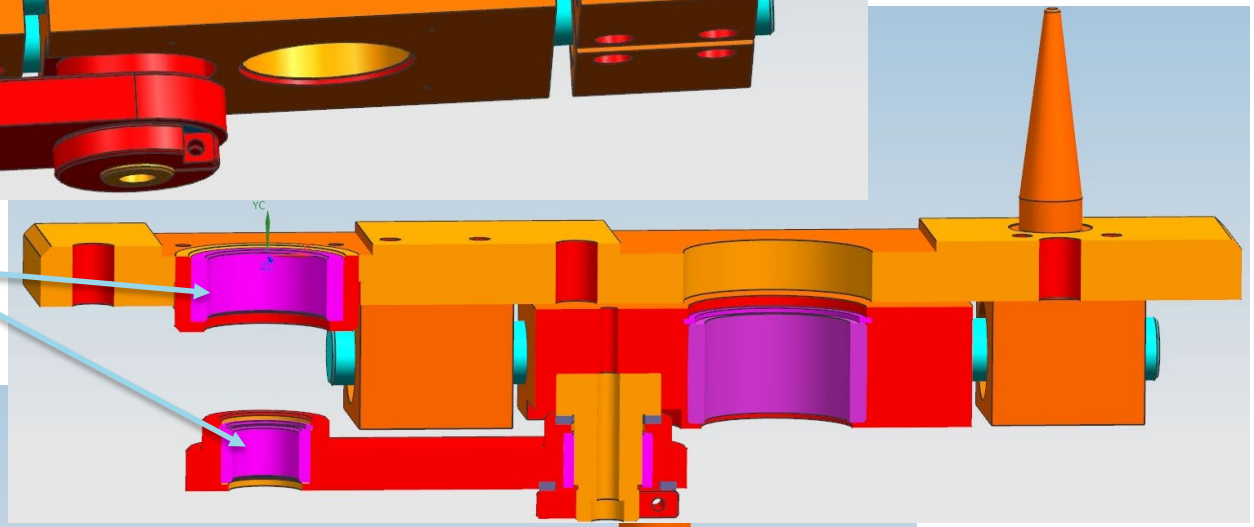

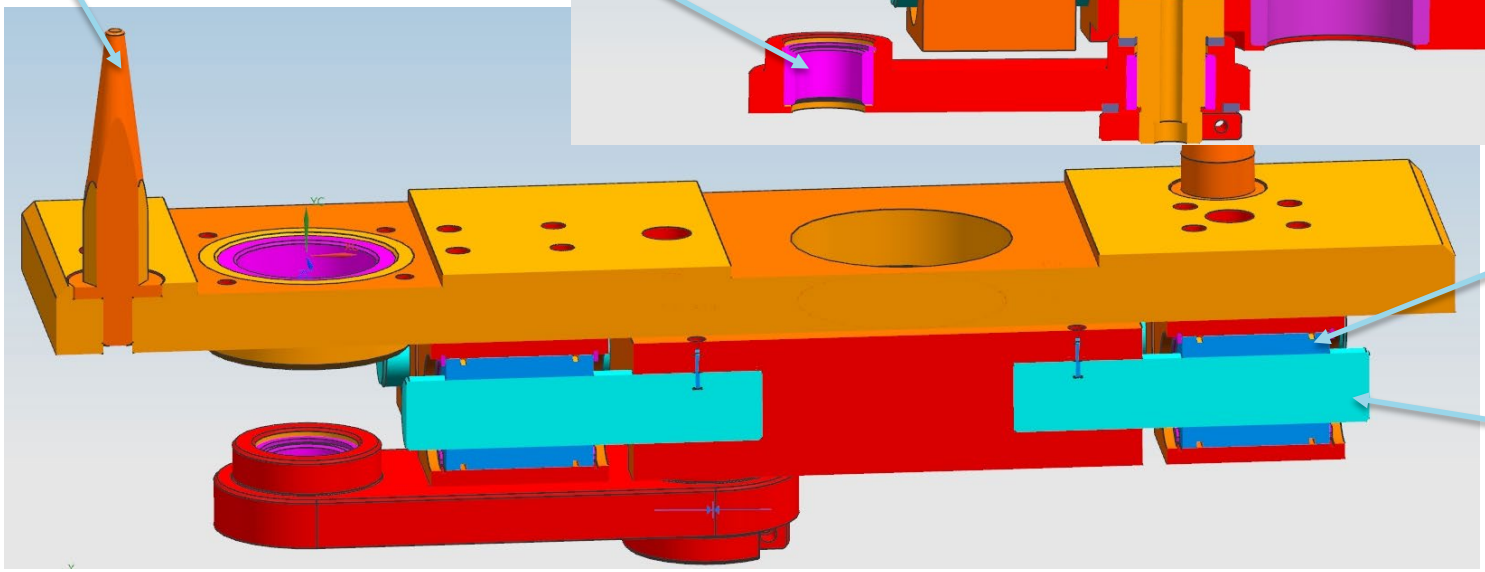

Lower and Upper drives exchange scenario

Horn-1 exchange procedure is followed

Horn-1 Chase

Target

Move T-blocks from chase to T-blocks storage and Horn-1 module to Work Cell

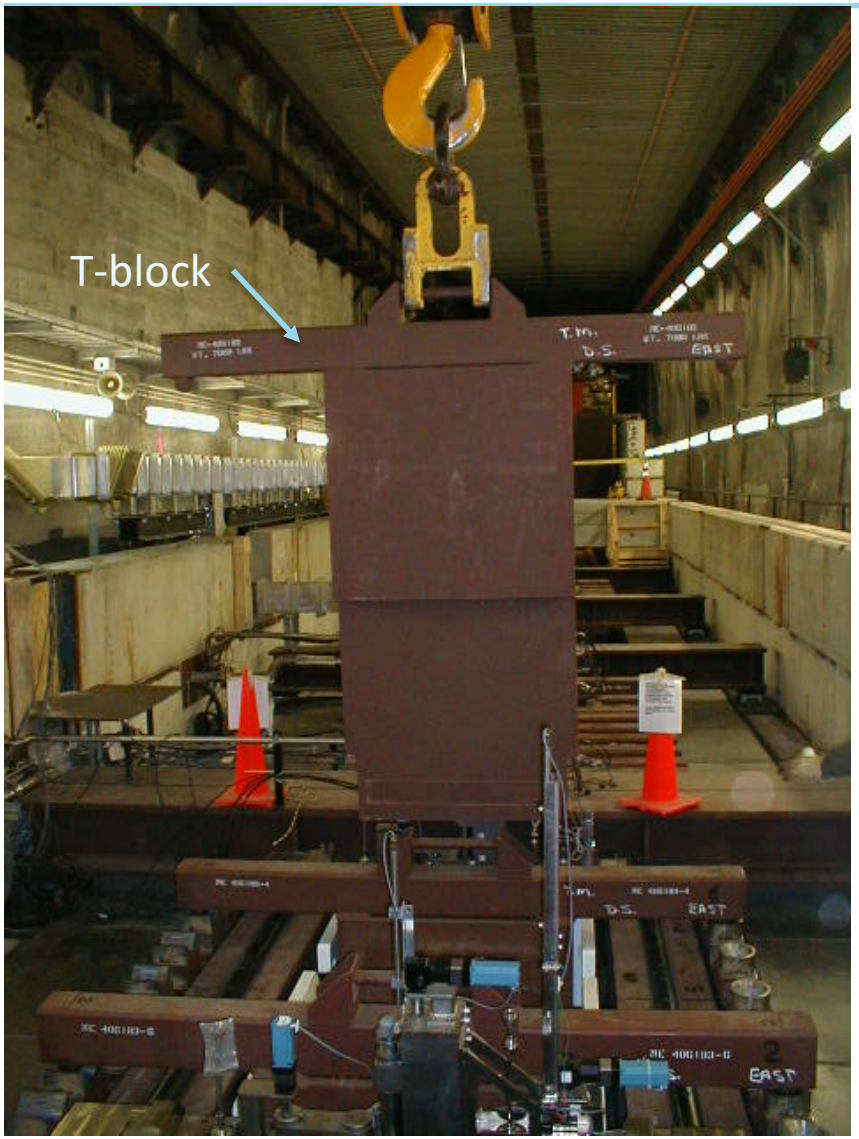

Work Cell

Horn-1 is disconnected from module

Horn-1 is moved to the morgue

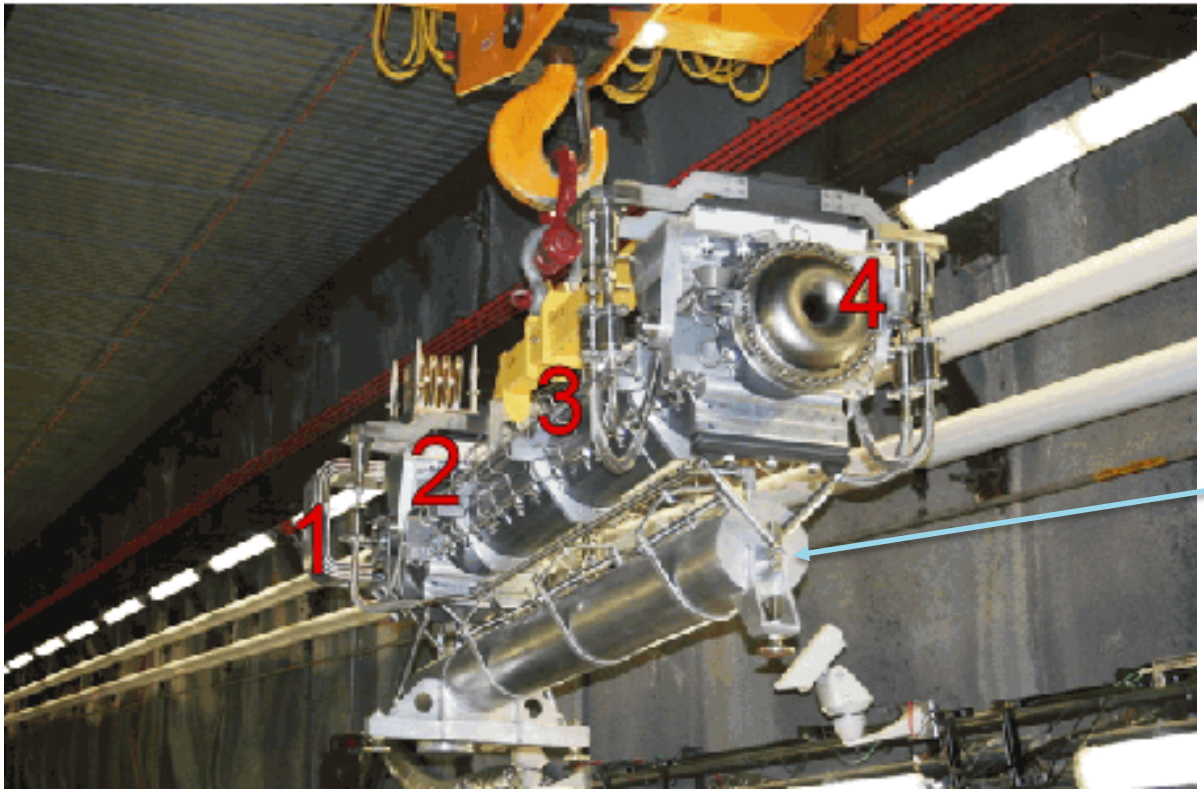

Horn-1

Detail steps of the drive mechanisms exchange procedure will be presented by Keith Anderson after my presentation

Horn1 module drive mechanisms pre-assembly and Remote Handling Training

Horn - module assembly in MI-8

Module mock-up

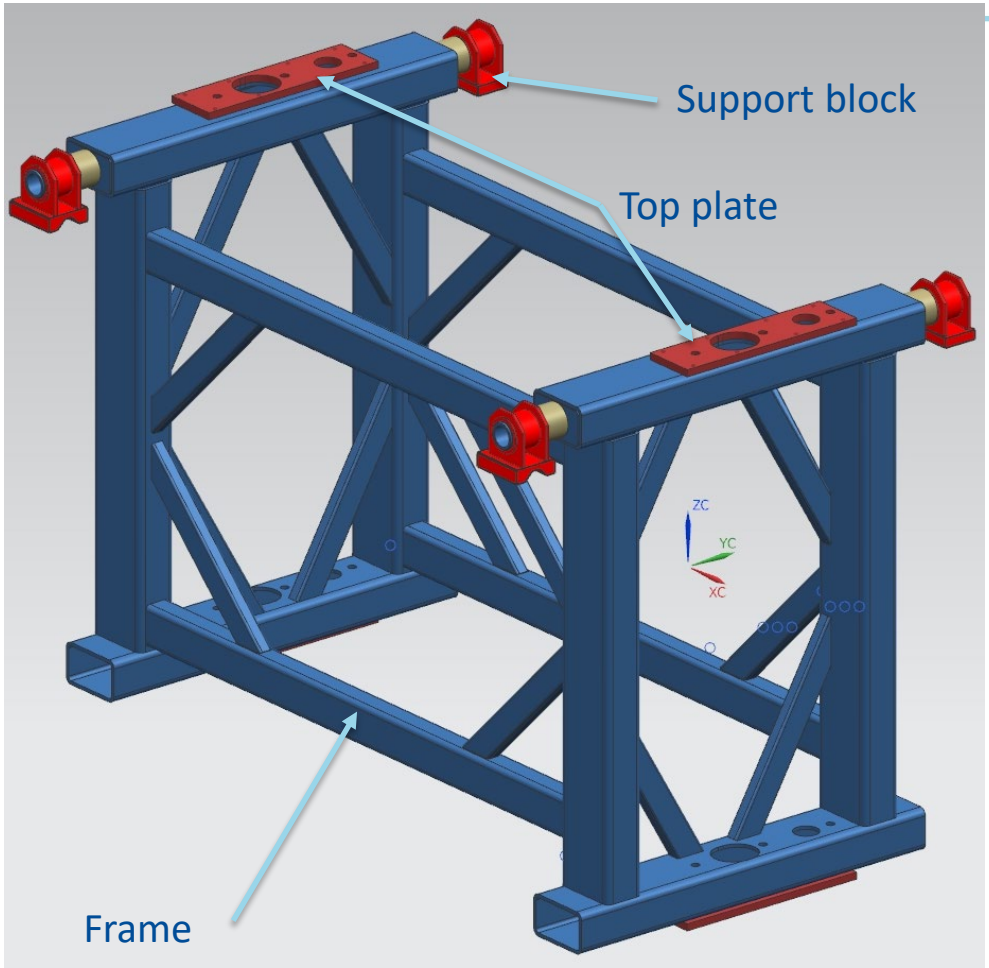

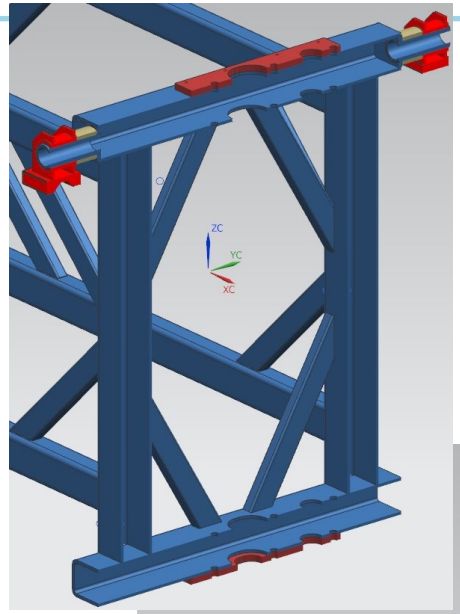

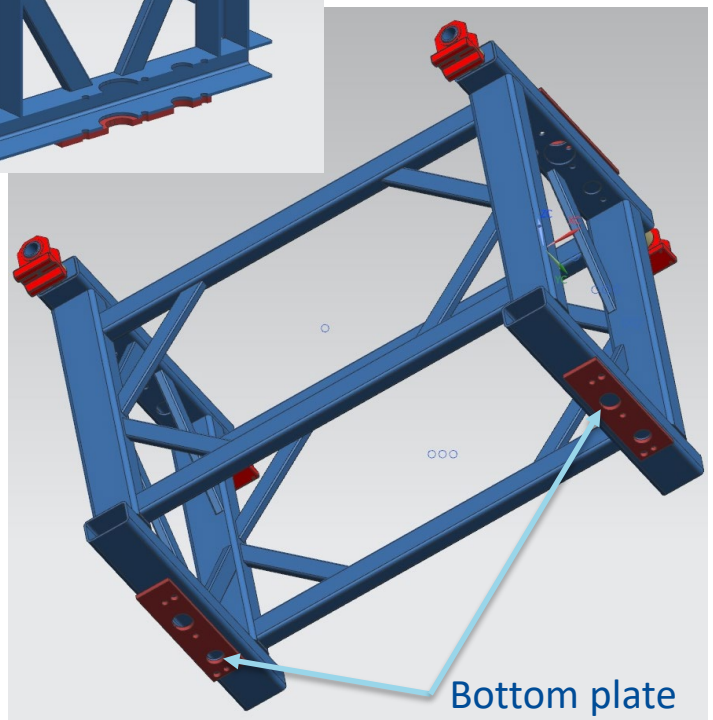

Module mock-up frame –drive mechanisms assembly

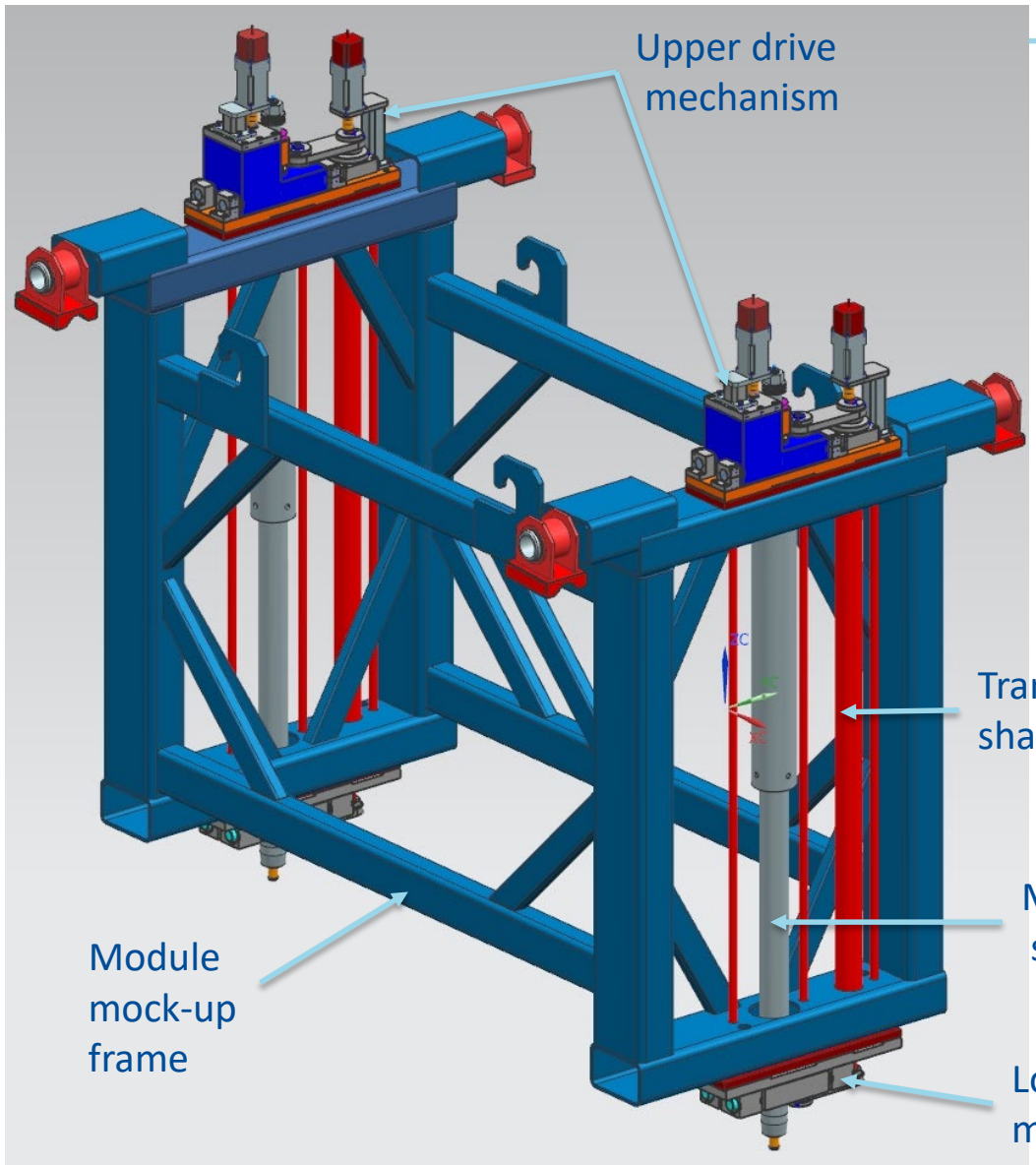

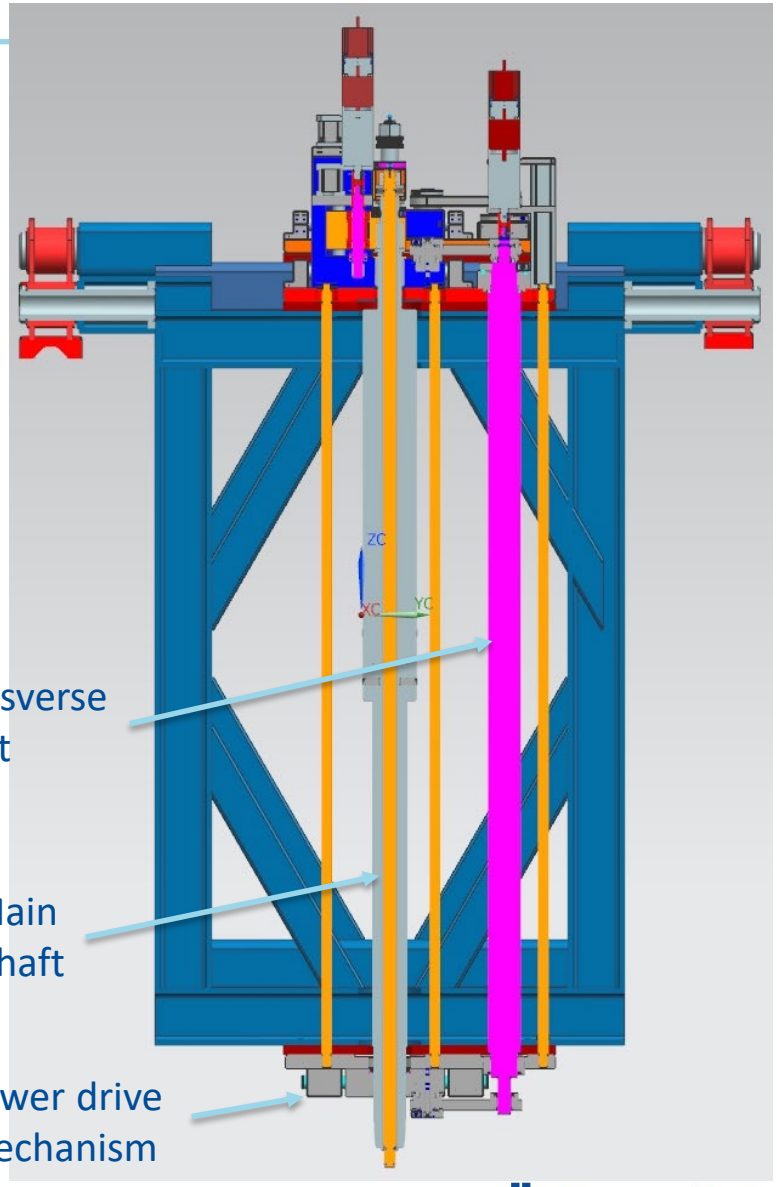

Horn-1 shafts installation

The Horn-module assembly stand is installed in MI-8 for the lower drive mechanism removing and installation practice. The practice was done on Monday August 17.

Module mock-up frame

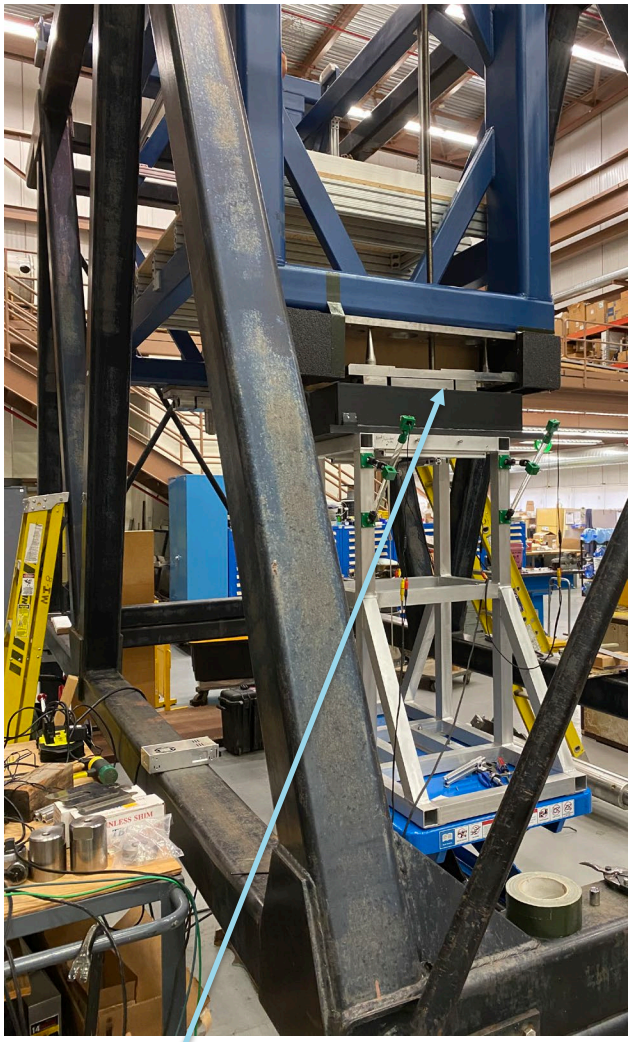

Horn-1 module Assembly stand

Lower drive mechanism

Cask support aluminum frame

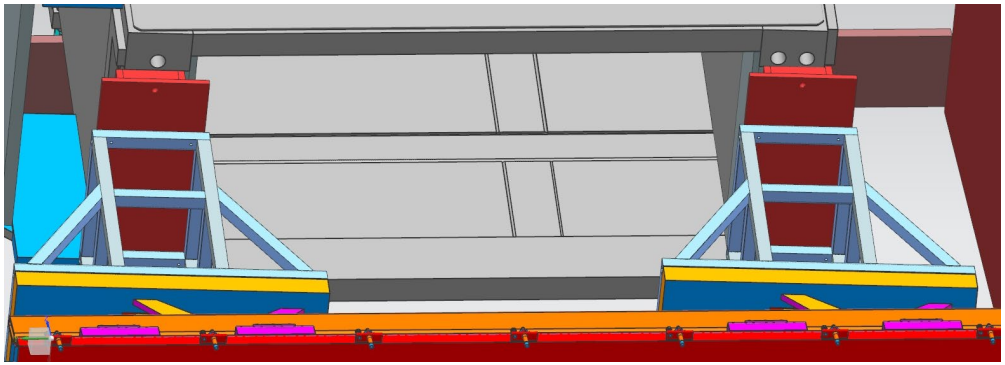

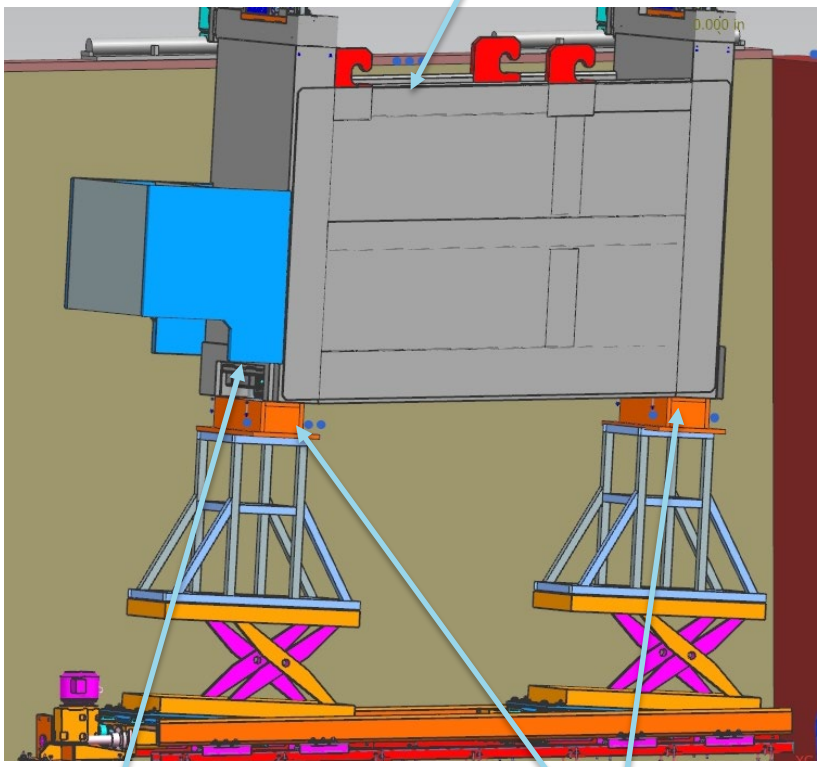

Upper drive mechanisms storage box

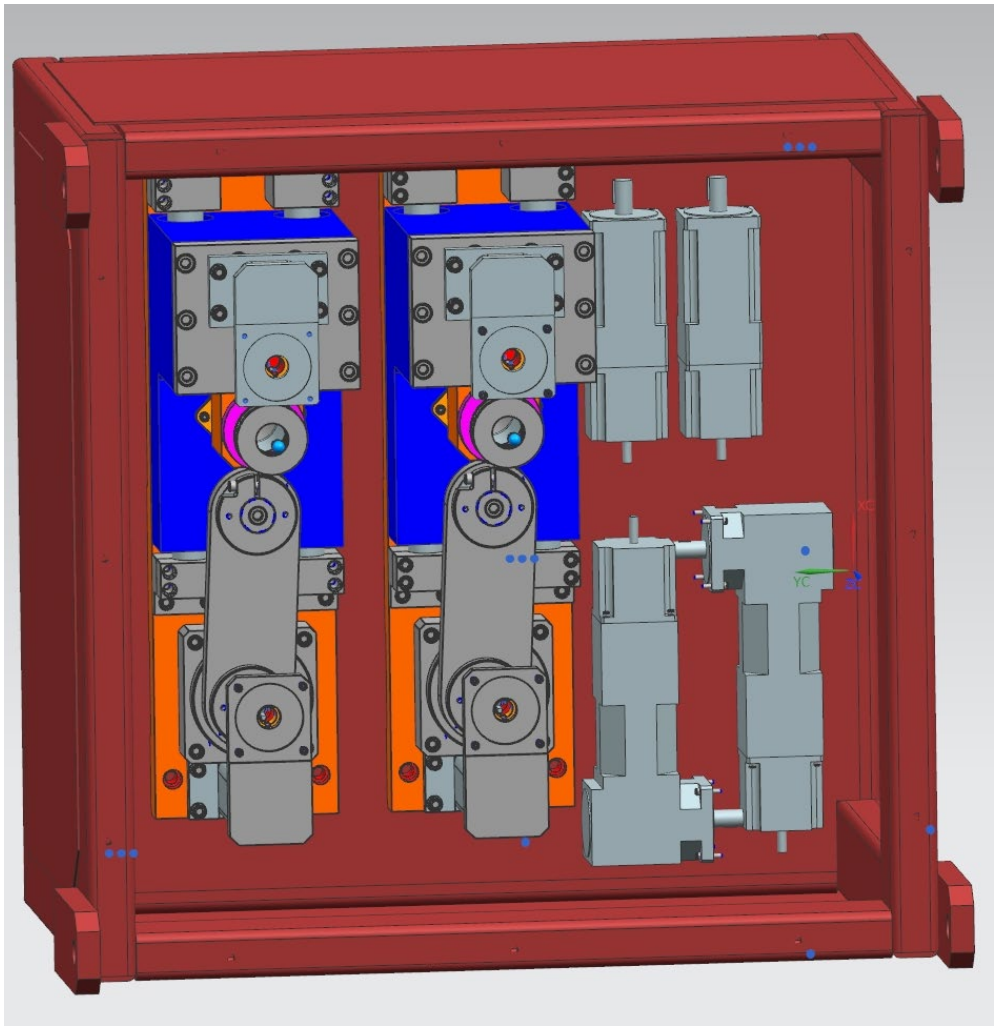

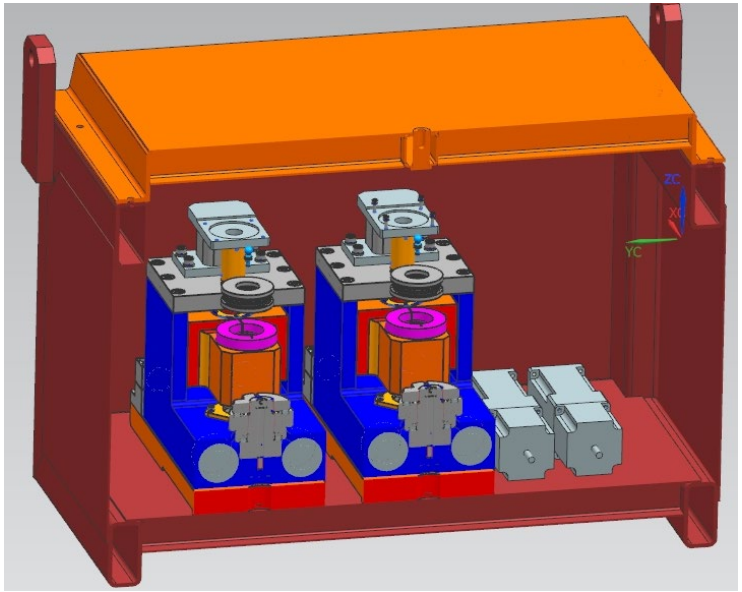

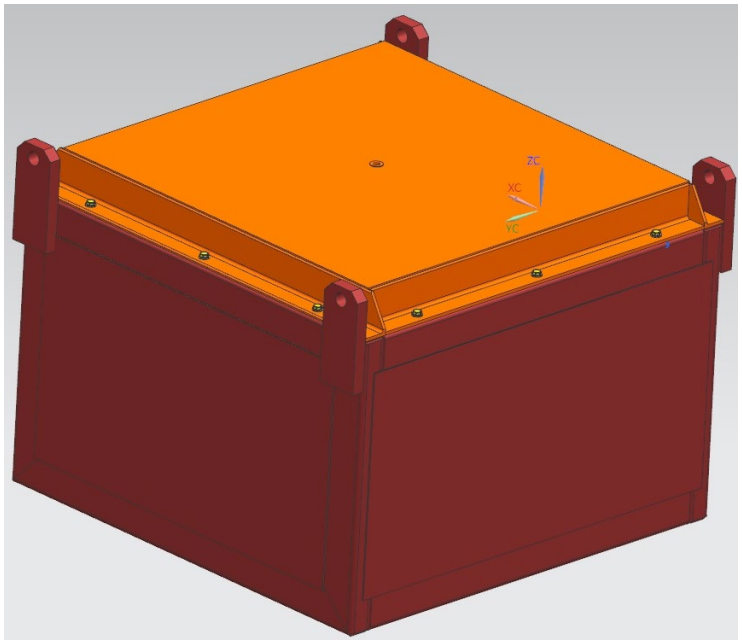

Transverse drives shafts storage

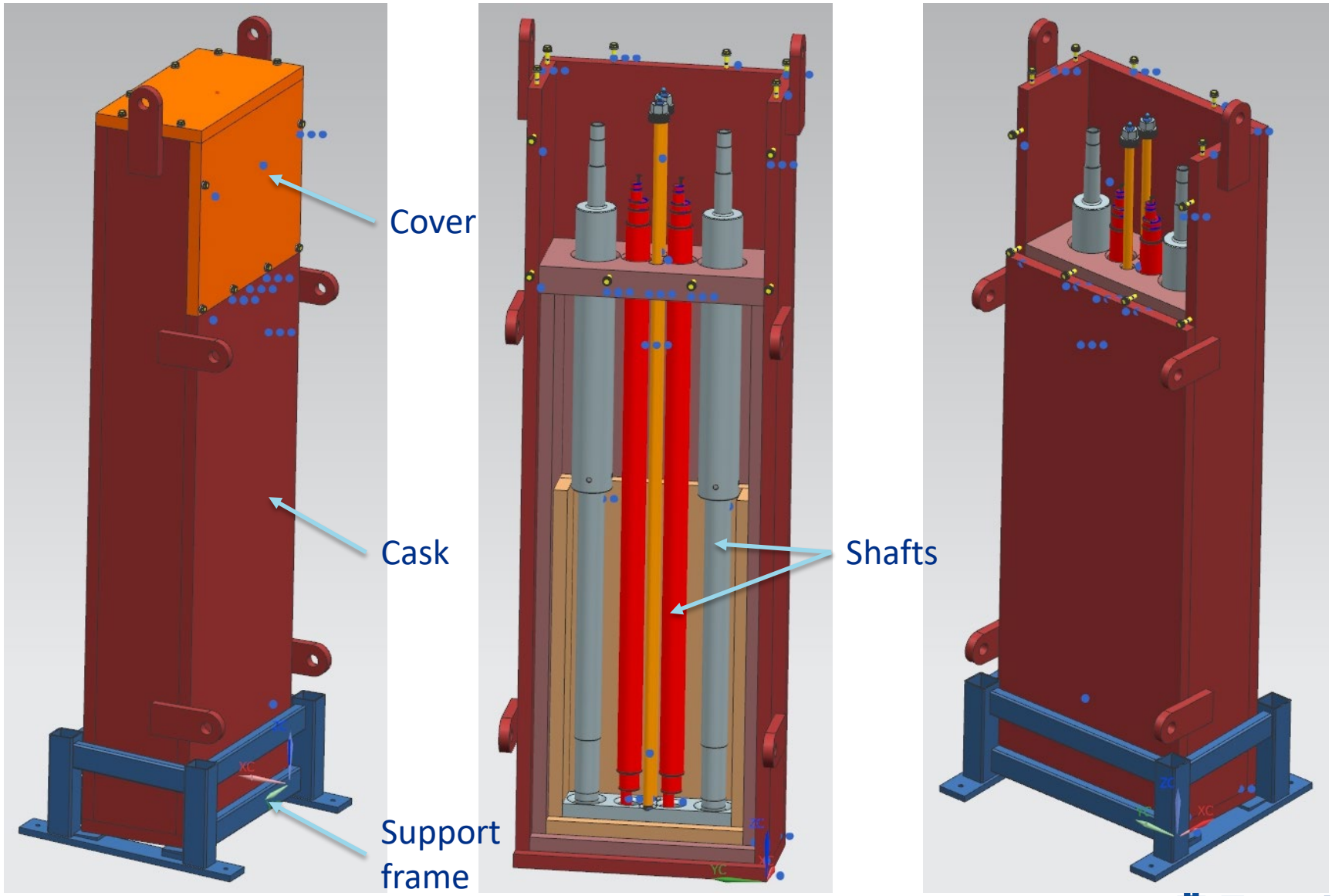

Lower drive mechanism cask

Lower Drive Mechanisms Casks

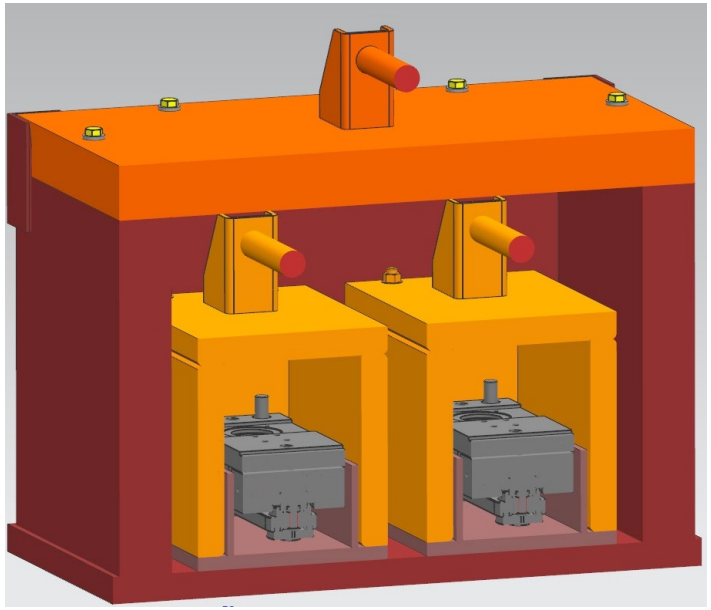

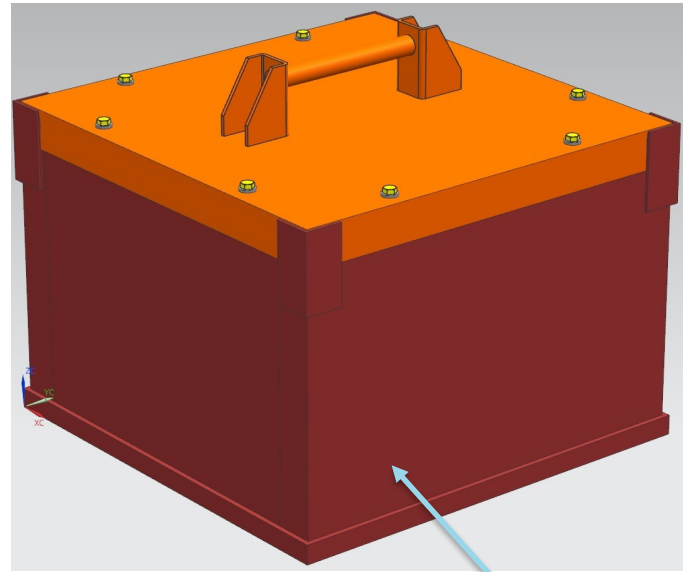

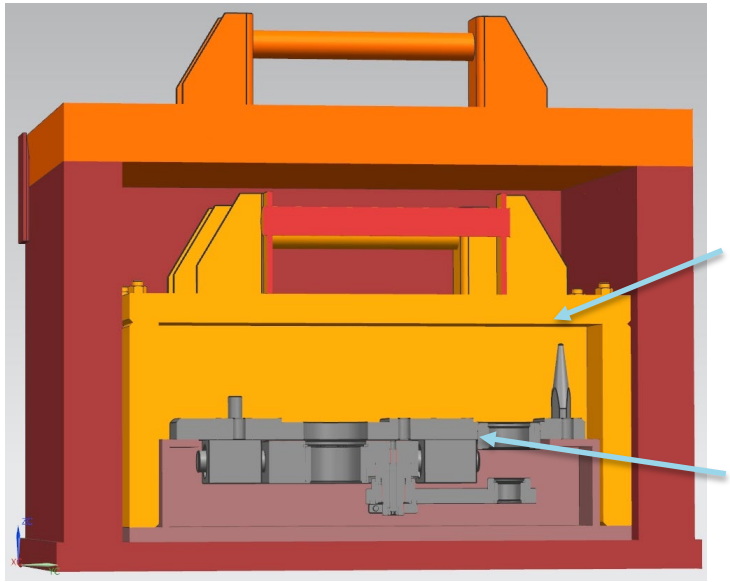

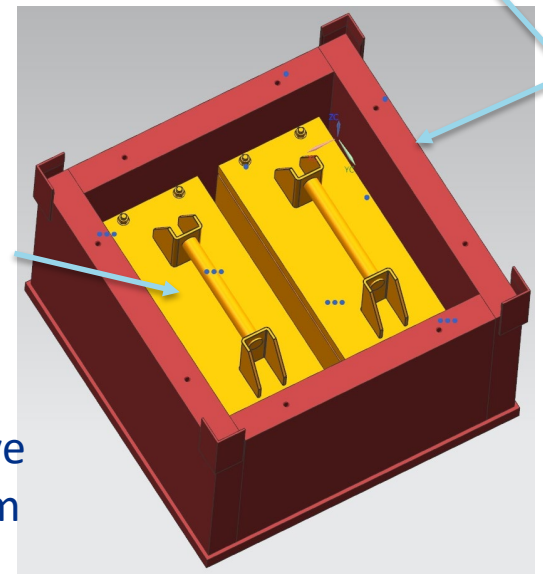

Main cask

Small cask

Lower drive mechanism

- Summary:
- 1. All replacement parts are made from the stainless steel or anodized aluminum.
- 2. More powerful motors and gear boxes is installed.
- 3. Linear ball bearings are replaced with aluminum anodized bushings.
- 4. The module mock-up was fabricated and used for transverse drives pre-assembly and testing.
- 6. Lower drive mechanism cask support frame was fabricated s used for practice.
- 7. Drive mechanisms parts storage casks are under fabrication.
- 6. The module assembly stand is installed in MI-8 and used for transverse drives removing and installation practice.
- 7. Special tools are fabricated for remote handling operations.