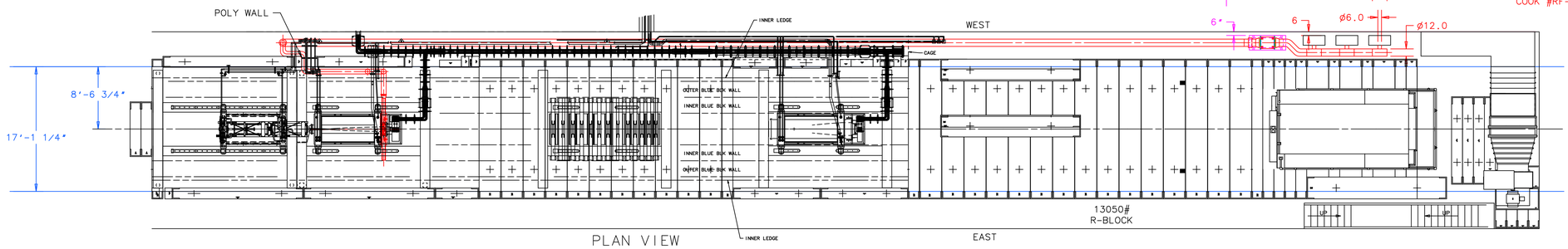

PLAN VIEW
AT 3.34° NOT GRAVITY
MOST R-BLOCKS
REMOVED FOR CLARITY

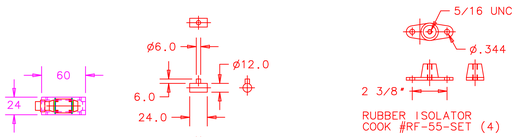

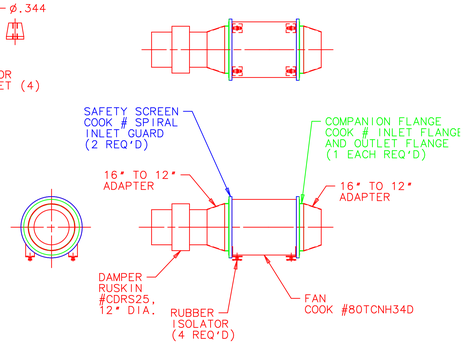

FAN DETAIL AND ASSEMBLY
(SEE NOTE #1)

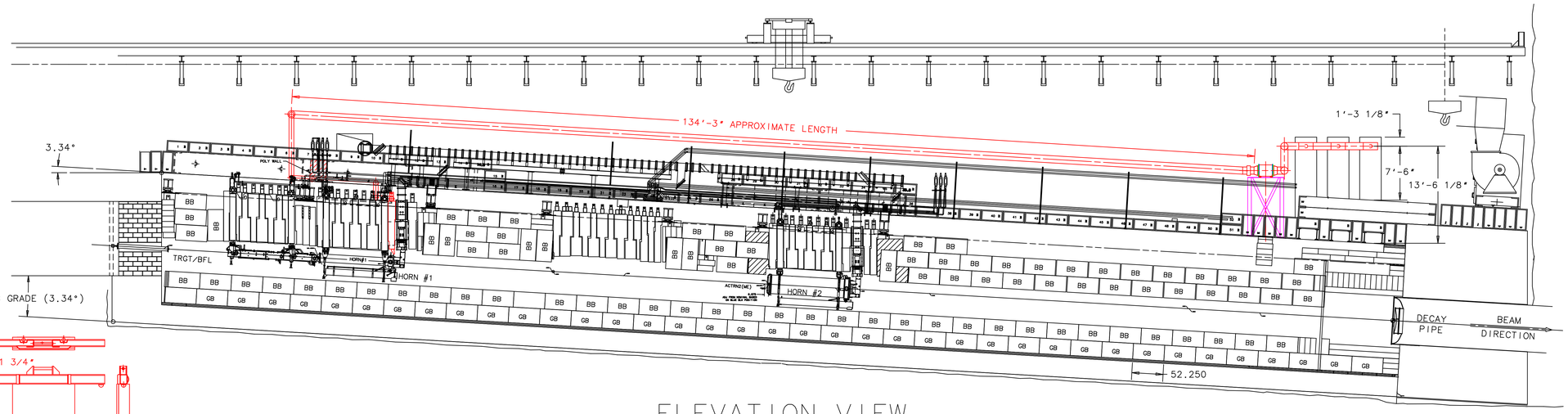

ELEVATION VIEW

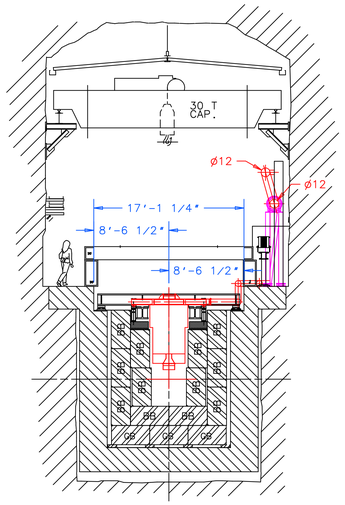

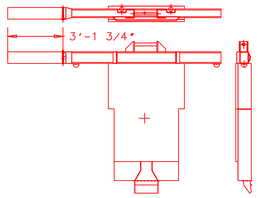

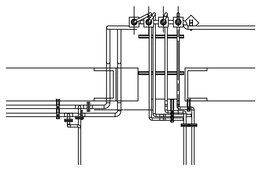

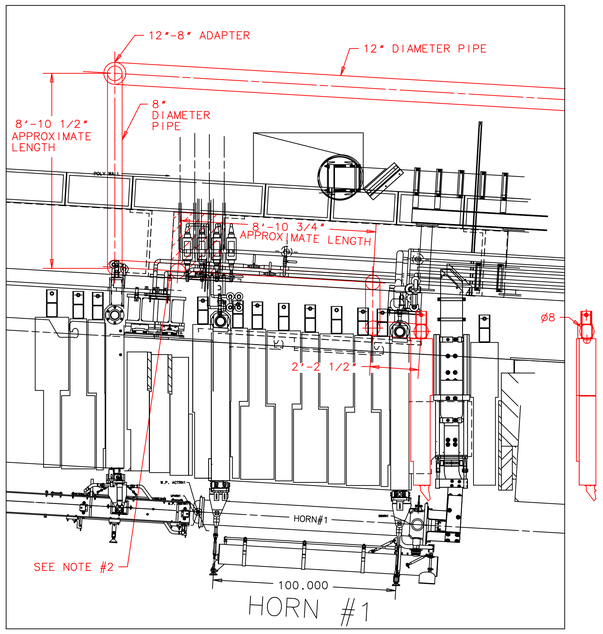

HORN #1

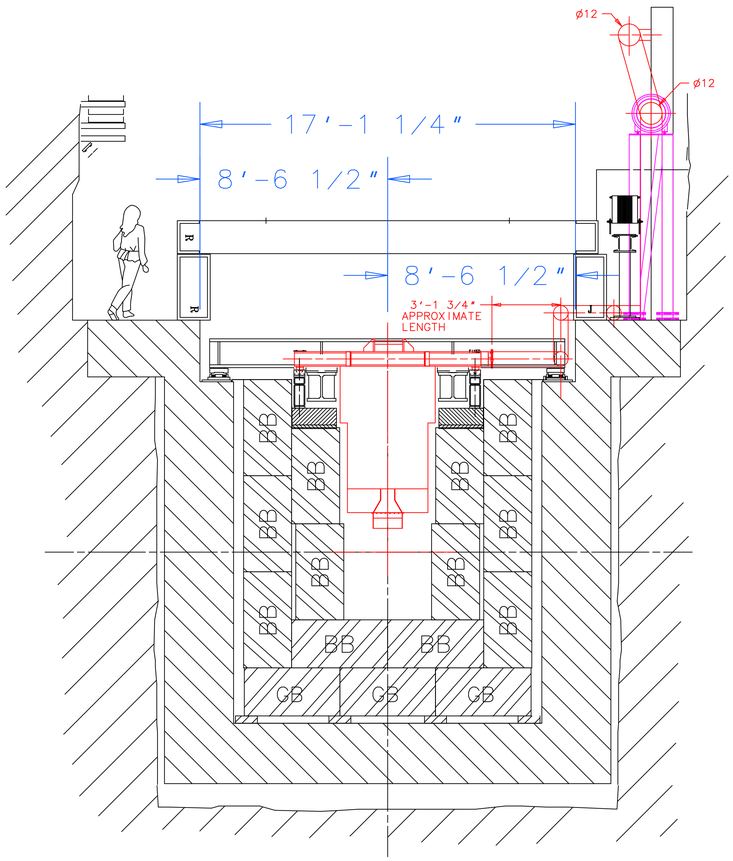

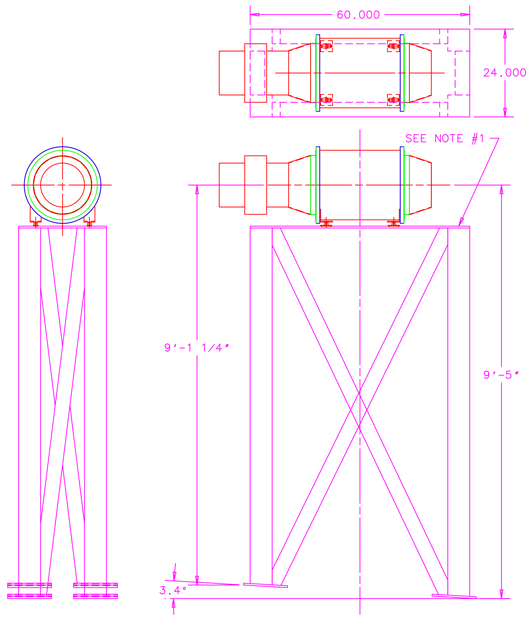

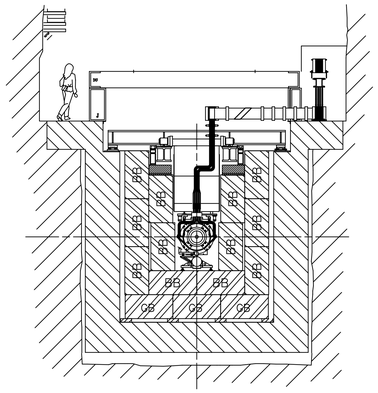

NOTES:

1.) FAN ASSEMBLY BASE & SUPPORT STRUCTURE TO BE FABRICATED BY DUCTING CONTRACTOR.

2.) PENETRATION TO BE CORED BY CONTRACTOR OR MODIFIED BY FERMILAB AS DIRECTED BY ESH&Q.

3.) CONTRACTOR TO SUPPLY ALL DUCTWORK & TRANSITIONS. FERMILAB TO SUPPLY DAMPER & FAN ASSEMBLY, AND QUICK DISCONNECT COUPLINGS AT T-BLOCK.

4.) FINAL AIR FLOW CALIBRATION: CONFIRM FLOW RATE IN RANGE 600-1000 CFM.

F10129759-NUMI TARGET HALL DUCT WORK LAYOUT