DESCRIPTION: BAFFLE ME ANU PRODUCTION SUB-ASSEMBLY
CATEGORY: ASSEMBLY PROJECT:

REV	REVISION CONTROL DOCUMENT	DATES		SIGNATURES
-	F10041831---RCD	22-Apr-2015	DRAWN	G.WAVER
		22-Apr-2015	APPROVED	K.E.ANDERSON

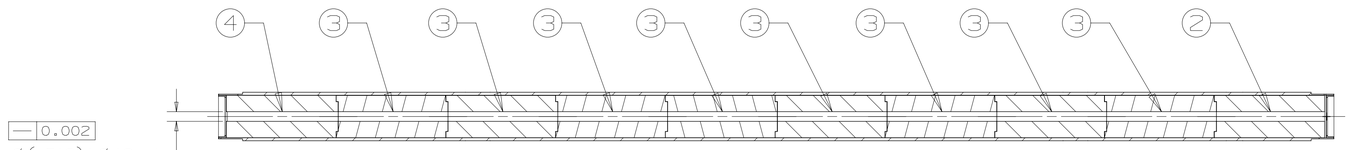

0.002
Ø(.512)(Ø13mm)
FINAL ASSEMBLY
CRITTCAL TOLERANCE

SECTION A-A

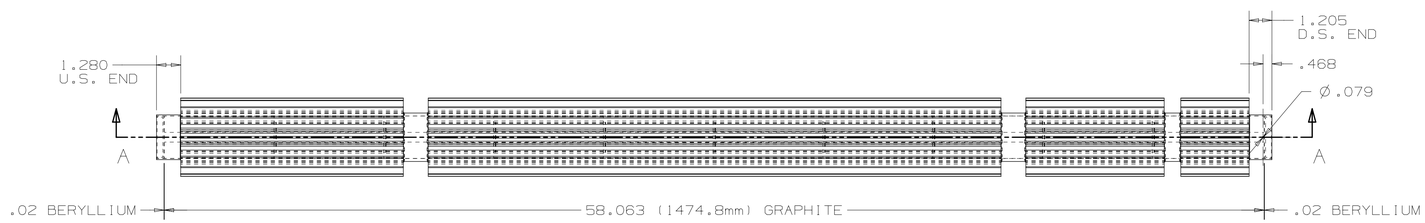

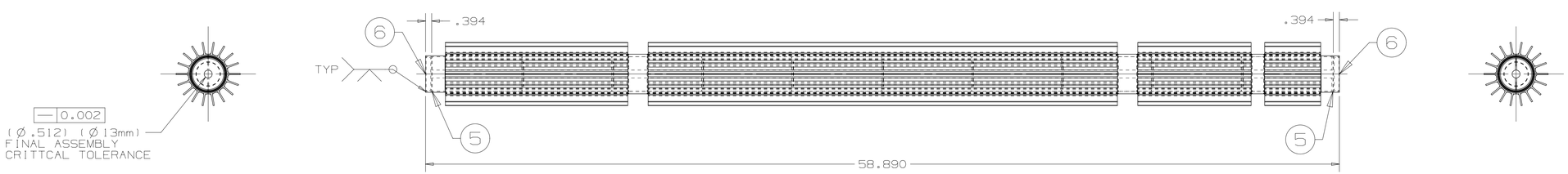

NOTES:

1.) GRAPHITE PIECES (ITEMS #2, #3 AND #4) TO BE PRESS FIT AT 150°C-160°C WITH .005"-.006" INTERFERENCE FIT AT ROOM TEMPERATURE.

ITEM	PART NO.	DESCRIPTION	QTY.
6	F00433955	RETAINING RING	2
5	F00433956	BERYLLIUM DISC	2
4	F10027673	US CORE	1
3	F10027675	CORE	8
2	F10027674	DS CORE	1
1	F10040469	FINAL MACHINING	1

UNLESS OTHERWISE SPECIFIED

±.X	±.XX	±.XXX	±X/X	±X°
.1	.02	.005	1/16	1°

BREAK ALL SHARP EDGES .015 MAX.
DO NOT SCALE DRAWING
DIMENSIONS BASED ON ASME Y14.5-2009
MAX. ALL MACH SURFACES 125
DRAWING UNITS: INCHES

DRAWN	G.WAVER	DATE	22-Apr-2015
CHECKED	K.E.ANDERSON	DATE	22-Apr-2015
APPROVED	K.E.ANDERSON	DATE	22-Apr-2015

USED ON

MATERIAL: SEE PARTS LIST

GROUP: Accelerator Mechanical Support CAGE CODE: 0U5R6

FERMI NATIONAL ACCELERATOR LABORATORY
UNITED STATES DEPARTMENT OF ENERGY

NAME: BAFFLE ME ANU PRODUCTION FINAL ASSEMBLY

SCALE	SIZE	DRAWING NUMBER	SHEET	REV
1:4	D	F10041831	1 OF 1	-

DESCRIPTION: BAFFLE ME ANU PRODUCTION FINAL MACHINING
CATEGORY: BAFFLE PROJECT: NuMI/Beamline

REV	REVISION CONTROL DOCUMENT	DATES		SIGNATURES
B	F10040469-B-RCD	07-Dec-2017	DRAWN	K.HUNDEN
		30-Mar-2018	APPROVED	C.CROWLEY

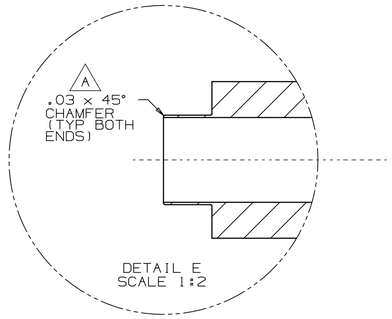

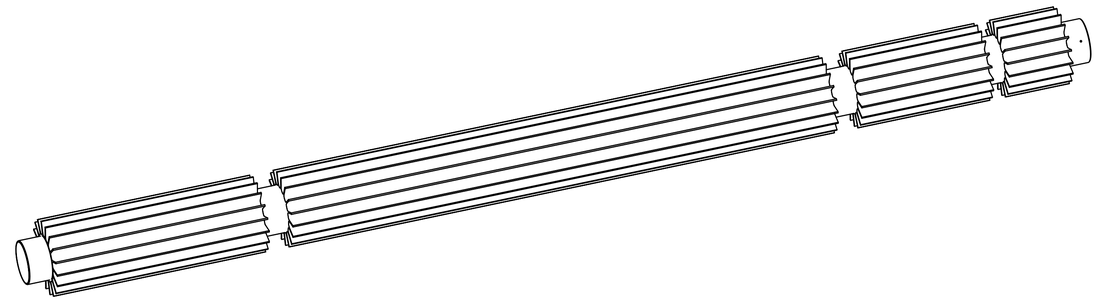

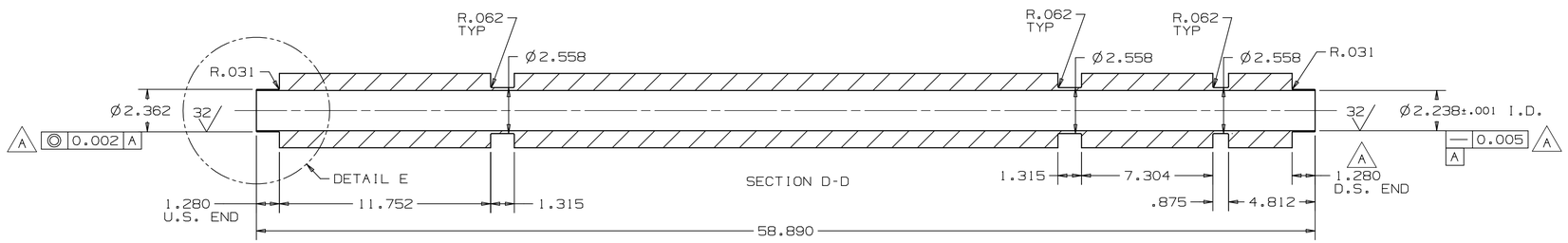

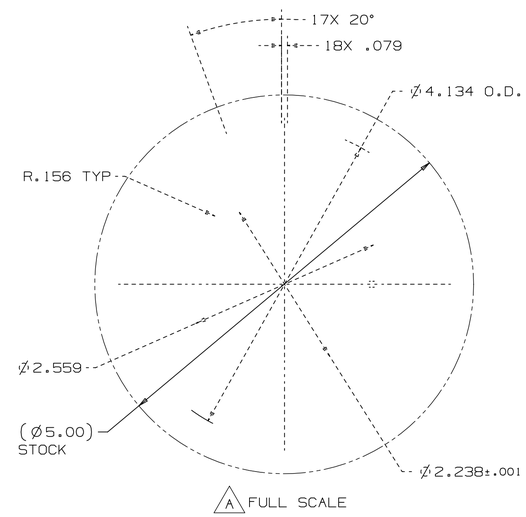

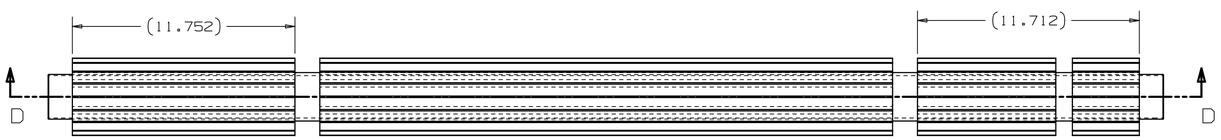

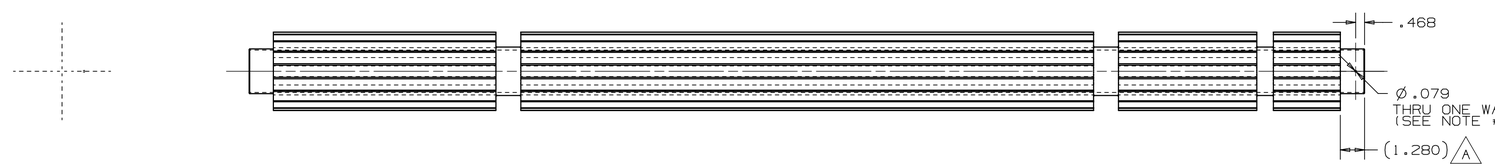

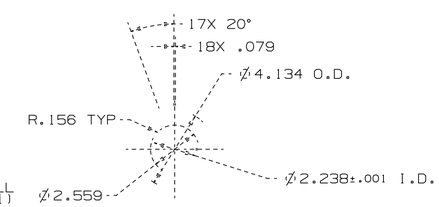

NOTES:

1.) Ø.079 HOLE TO BE DRILLED AFTER ALL GRAPHITE SLUGS ARE SHRUNK FIT AND ALL FINISH MACHINING IS COMPLETED TO MAKE SURE THE HOLE ALIGNS WITH THE GRAPHITE SLOT. (SEE DRAWING #F10041831, F10090867)

B

UNLESS OTHERWISE SPECIFIED				
±.X	±.XX	±.XXX	±X/X	±X°
.1	.010	.005	1/16	1/2°

BREAK ALL SHARP EDGES .015 MAX.
DO NOT SCALE DRAWING
DIMENSIONS BASED ON ASME Y14.5M-1994
MAX. ALL MACH SURFACES 125
DRAWING UNITS: INCHES

DRAWN	G.WAVER	DATE	22-Apr-2015
CHECKED	K.E.ANDERSON	DATE	22-Apr-2015
APPROVED	K.E.ANDERSON	DATE	22-Apr-2015

USED ON: F10090867, F10041831 B

MATERIAL: B 6061-T651 ALUMINUM, UNS A96061

GROUP: Accelerator Mechanical Support | CAGE CODE: 0U5R6

FERMI NATIONAL ACCELERATOR LABORATORY
UNITED STATES DEPARTMENT OF ENERGY

NAME: BAFFLE ME ANU PRODUCTION FINAL MACHINING

SCALE	SIZE	DRAWING NUMBER	SHEET	REV
1:4	D	F10040469	1 OF 1	B

DESCRIPTION: BAFFLE CORE DS - NOVA - ANU BAFFLE UPGRADE
CATEGORY: BAFFLE PROJECT: NUMIBeamline

REV	REVISION CONTROL DOCUMENT	DATES	SIGNATURES	
B	F10027674-B-RCD	23-Apr-2015	DRAWN	G.WAVER
		14-Sep-2017	APPROVED	K.E.ANDERSON

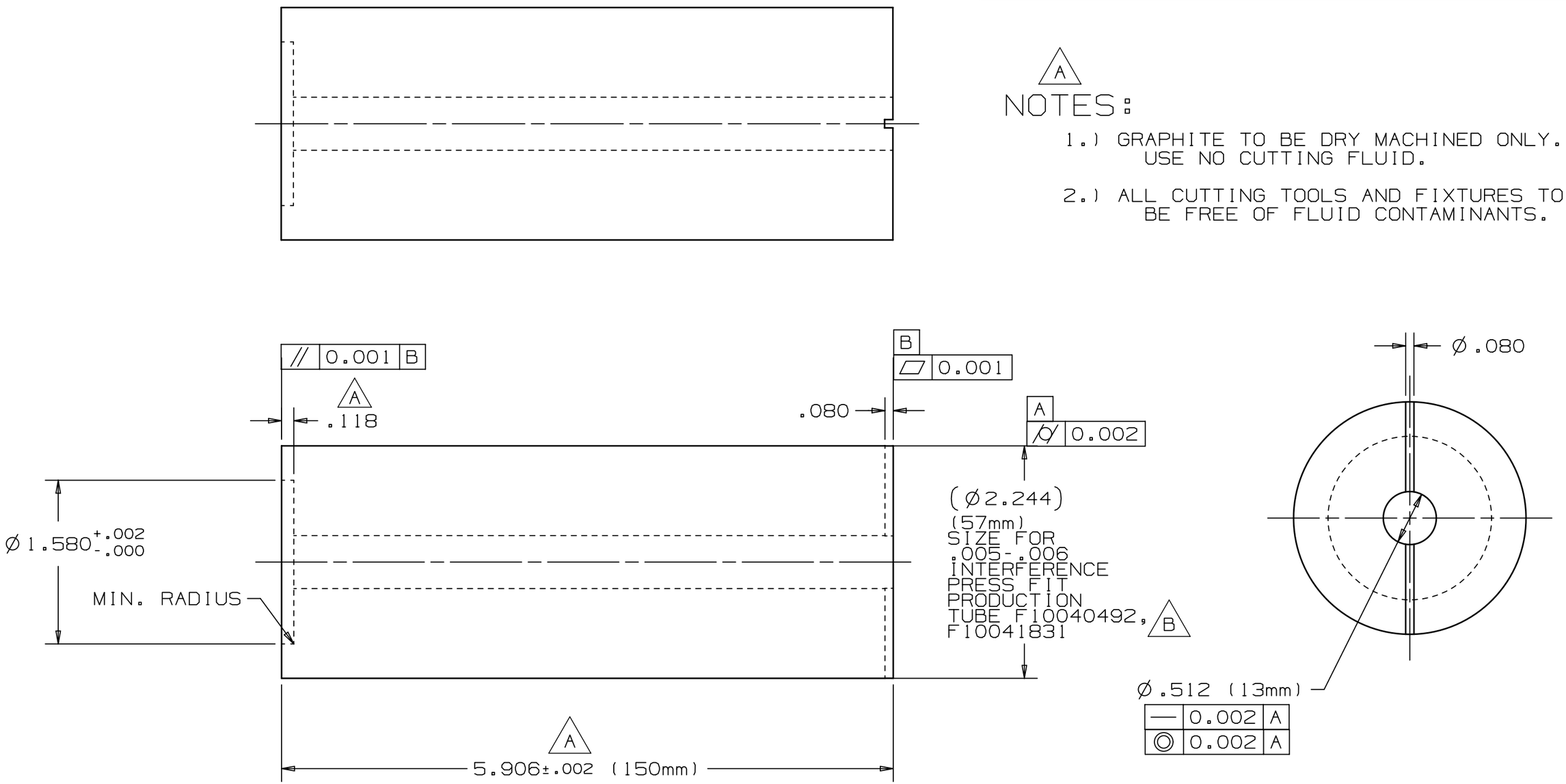

A

NOTES:

1.) GRAPHITE TO BE DRY MACHINED ONLY. USE NO CUTTING FLUID.

2.) ALL CUTTING TOOLS AND FIXTURES TO BE FREE OF FLUID CONTAMINANTS.

UNLESS OTHERWISE SPECIFIED				
±.X	±.XX	±.XXX	±X/X	±X°
.1	.02	.005	1/16	1°

BREAK ALL SHARP EDGES .015 MAX.
DO NOT SCALE DRAWING
DIMENSIONS BASED ON ASME Y14.5M-1994
MAX. ALL MACH SURFACES 125
DRAWING UNITS: INCHES

DRAWN	G.WAVER	DATE	28-Aug-2014
CHECKED	K.ANDERSON	DATE	30-Sep-2014
APPROVED	K.ANDERSON	DATE	30-Sep-2014

USED ON
F10025759, F10028420,
F10040492, F10041831

MATERIAL
GRAPHITE, ROD R7650

GROUP: Accelerator Mechanical Support
CAGE CODE: 0U5R6

FERMI NATIONAL ACCELERATOR LABORATORY
UNITED STATES DEPARTMENT OF ENERGY

NAME
BAFFLE CORE DS

SCALE	SIZE	DRAWING NUMBER	SHEET	REV
1:1	B	F10027674	1 OF 1	B

DESCRIPTION: BAFFLE CORE - NOVA - ANU BAFFLE UPGRADE
CATEGORY: BAFFLE PROJECT: NUMIBeamline

REV	REVISION CONTROL DOCUMENT	DATES	SIGNATURES	
B	F10027675-B-RCD	23-Apr-2015	DRAWN	G.WAVER
		14-Sep-2017	APPROVED	K.E.ANDERSON

A

NOTES:

1.) GRAPHITE TO BE DRY MACHINED ONLY.
USE NO CUTTING FLUID.

2.) ALL CUTTING TOOLS AND FIXTURES TO
BE FREE OF FLUID CONTAMINANTS.

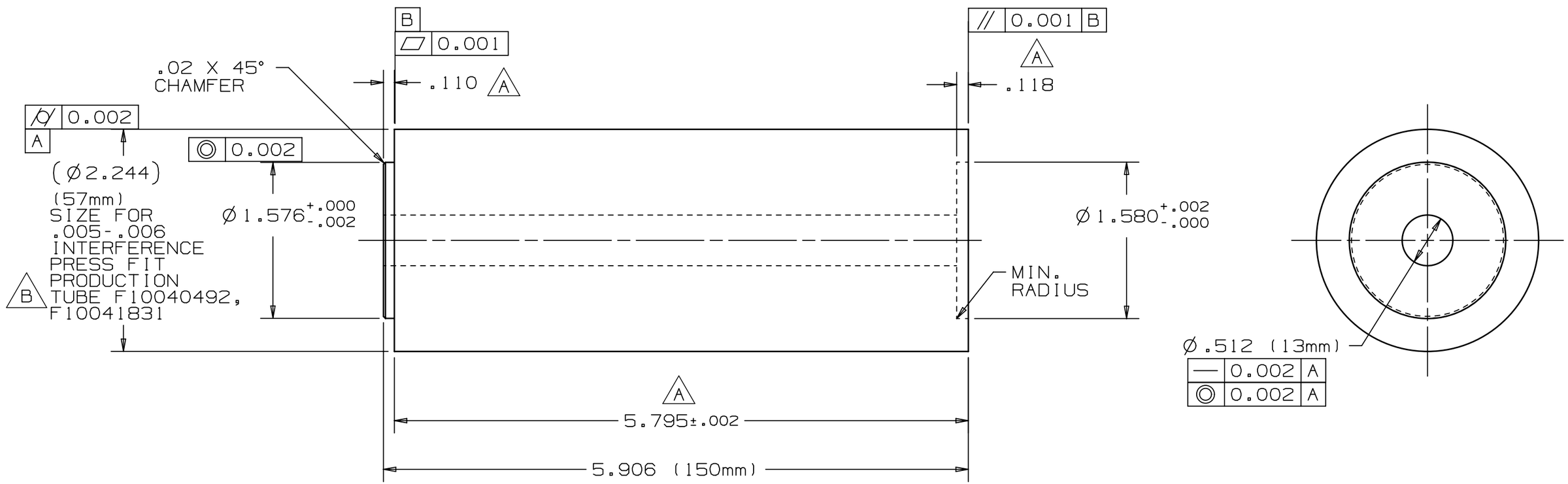

UNLESS OTHERWISE SPECIFIED				
±.X	±.XX	±.XXX	±X/X	±X°
.1	.02	.005	1/16	1°

BREAK ALL SHARP EDGES .015 MAX.
DO NOT SCALE DRAWING
DIMENSIONS BASED ON ASME Y14.5M-1994
MAX. ALL MACH SURFACES 125
DRAWING UNITS: INCHES

DRAWN	G.WAVER	DATE	27-Aug-2014
CHECKED	K.ANDERSON	DATE	30-Sep-2014
APPROVED	K.ANDERSON	DATE	30-Sep-2014

USED ON
F10025759, F10028420,
F10040492, F10041831

MATERIAL
GRAPHITE, ROD R7650

GROUP: Accelerator Mechanical Support
CAGE CODE: 0U5R6

FERMI NATIONAL ACCELERATOR LABORATORY
UNITED STATES DEPARTMENT OF ENERGY

NAME
BAFFLE CORE

SCALE	SIZE	DRAWING NUMBER	SHEET	REV
1:1	B	F10027675	1 OF 1	B

DESCRIPTION: BAFFLE CORE US - NOVA - ANU BAFFLE UPGRADE
CATEGORY: BAFFLE PROJECT: NUMIBeamline

REV	REVISION CONTROL DOCUMENT	DATES	SIGNATURES	
B	F10027673-B-RCD	23-Apr-2015	DRAWN	G.WAVER
		14-Sep-2017	APPROVED	K.E.ANDERSON

(A) NOTES:

1.) GRAPHITE TO BE DRY MACHINED ONLY.
USE NO CUTTING FLUID.

2.) ALL CUTTING TOOLS AND FIXTURES TO
BE FREE OF FLUID CONTAMINANTS.

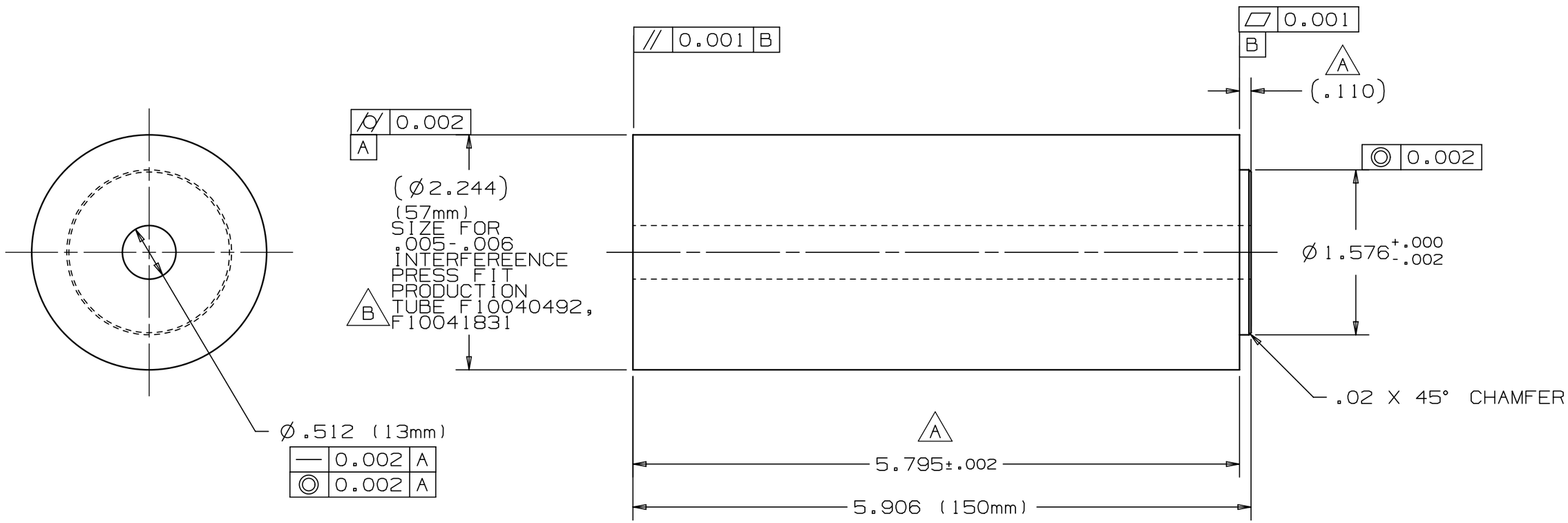

UNLESS OTHERWISE SPECIFIED				
±.X	±.XX	±.XXX	±X/X	±X°
.1	.02	.005	1/16	1°

BREAK ALL SHARP EDGES .015 MAX.
DO NOT SCALE DRAWING
DIMENSIONS BASED ON ASME Y14.5M-1994
MAX. ALL MACH SURFACES 125
DRAWING UNITS: INCHES

DRAWN	G.WAVER	DATE	28-Aug-2014
CHECKED	K.ANDERSON	DATE	30-Sep-2014
APPROVED	K.ANDERSON	DATE	30-Sep-2014

USED ON
F10025759, F10028420,
F10040492, F10041831

MATERIAL
GRAPHITE, ROD R7650

GROUP: Accelerator Mechanical Support
CAGE CODE: 0U5R6

FERMI NATIONAL ACCELERATOR LABORATORY
UNITED STATES DEPARTMENT OF ENERGY

NAME
BAFFLE CORE US

SCALE	SIZE	DRAWING NUMBER	SHEET	REV
1:1	B	F10027673	1 OF 1	B