ASME BTH-1–2017
(Revision of ASME BTH-1–2014)

Design of Below-the-Hook Lifting Devices

AN AMERICAN NATIONAL STANDARD

The American Society of Mechanical Engineers

Copyrighted material licensed to Fermi National Laboratory by Clarivate Analytics (US) LLC, subscriptions.techstreet.com, downloaded on 2020-01-31 15:43:32 +0000 by Fermi National Laboratory User.
No further reproduction or distribution is permitted.

ASME BTH-1–2017
(Revision of ASME BTH-1–2014)

Design of Below-the-Hook Lifting Devices

AN AMERICAN NATIONAL STANDARD

The American Society of Mechanical Engineers
Two Park Avenue • New York, NY • 10016 USA

Copyrighted material licensed to Fermi National Laboratory by Clarivate Analytics (US) LLC, subscriptions.techstreet.com, downloaded on 2020-01-31 15:43:32 +0000 by Fermi National Laboratory User.
No further reproduction or distribution is permitted.

Date of Issuance: March 15, 2017

The next edition of this Standard is scheduled for publication in 2020. This Standard will become effective 1 year after the Date of Issuance.

ASME issues written replies to inquiries concerning interpretations of technical aspects of this Standard. Interpretations are published on the ASME Web site under the Committee Pages at http://cstools.asme.org/ as they are issued.

Errata to codes and standards may be posted on the ASME Web site under the Committee Pages to provide corrections to incorrectly published items, or to correct typographical or grammatical errors in codes and standards. Such errata shall be used on the date posted.

The Committee Pages can be found at http://cstools.asme.org/. There is an option available to automatically receive an e-mail notification when errata are posted to a particular code or standard. This option can be found on the appropriate Committee Page after selecting "Errata" in the "Publication Information" section.

ASME is the registered trademark of The American Society of Mechanical Engineers.

This code or standard was developed under procedures accredited as meeting the criteria for American National Standards. The Standards Committee that approved the code or standard was balanced to assure that individuals from competent and concerned interests have had an opportunity to participate. The proposed code or standard was made available for public review and comment that provides an opportunity for additional public input from industry, academia, regulatory agencies, and the public-at-large.

ASME does not "approve," "rate," or "endorse" any item, construction, proprietary device, or activity.

ASME does not take any position with respect to the validity of any patent rights asserted in connection with any items mentioned in this document, and does not undertake to insure anyone utilizing a standard against liability for infringement of any applicable letters patent, nor assumes any such liability. Users of a code or standard are expressly advised that determination of the validity of any such patent rights, and the risk of infringement of such rights, is entirely their own responsibility.

Participation by federal agency representative(s) or person(s) affiliated with industry is not to be interpreted as government or industry endorsement of this code or standard.

ASME accepts responsibility for only those interpretations of this document issued in accordance with the established ASME procedures and policies, which precludes the issuance of interpretations by individuals.

No part of this document may be reproduced in any form,
in an electronic retrieval system or otherwise,
without the prior written permission of the publisher.

The American Society of Mechanical Engineers
Two Park Avenue, New York, NY 10016-5990

Copyright © 2017 by
THE AMERICAN SOCIETY OF MECHANICAL ENGINEERS
All rights reserved
Printed in U.S.A.

Copyrighted material licensed to Fermi National Laboratory by Clarivate Analytics (US) LLC, subscriptions.techstreet.com, downloaded on 2020-01-31 15:43:32 +0000 by Fermi National Laboratory User.
No further reproduction or distribution is permitted.

CONTENTS

Foreword v
Committee Roster vi
Correspondence With the BTH Committee vii
Summary of Changes ix

Chapter 1 Scope, Definitions, and References 1
1-1 Purpose 1
1-2 Scope 1
1-3 New and Existing Devices 1
1-4 General Requirements 1
1-5 Definitions 2
1-6 Symbols 6
1-7 References 9

Chapter 2 Lifter Classifications 11
2-1 General 11
2-2 Design Category 11
2-3 Service Class 11

Chapter 3 Structural Design 12
3-1 General 12
3-2 Member Design 12
3-3 Connection Design 17
3-4 Fatigue Design 20
3-5 Other Design Considerations 22

Chapter 4 Mechanical Design 35
4-1 General 35
4-2 Sheaves 35
4-3 Wire Rope 36
4-4 Drive Systems 36
4-5 Gearing 36
4-6 Bearings 38
4-7 Shafting 39
4-8 Fasteners 40
4-9 Grip Support Force 41
4-10 Vacuum Lifting Device Design 41
4-11 Fluid Power Systems 42

Chapter 5 Electrical Components 43
5-1 General 43
5-2 Electric Motors and Brakes 43
5-3 Operator Interface 43
5-4 Controllers and Auxiliary Equipment 44
5-5 Grounding 45
5-6 Power Disconnects 45
5-7 Batteries 45

Chapter 6 Lifting Magnet Design 46
6-1 Purpose 46
6-2 Design Requirements 46
6-3 Selection and Design 46

Copyrighted material licensed to Fermi National Laboratory by Clarivate Analytics (US) LLC, subscriptions.techstreet.com, downloaded on 2020-01-31 15:43:32 +0000 by Fermi National Laboratory User.
No further reproduction or distribution is permitted.

Figures

1-5.5-1 Magnetic Lifters 5
4-2.6-1 Sheave Dimensions 35
4-2.7-1 Sheave Gap 35
4-9.2-1 Illustration of Holding and Support Forces 41

Tables

2-3-1 Service Class 11
3-2.2-1 Limiting Width–Thickness Ratios for Compression Elements 14
3-3.4.2-1 Minimum Effective Throat Thickness of Partial-Penetration Groove Welds 19
3-3.4.3-1 Minimum Sizes of Fillet Welds 20
3-4.3-1 Allowable Stress Ranges, ksi (MPa) 21
3-4.4-1 Fatigue Design Parameters 23
4-5.3-1 Strength Factors for Calculating Load Capacity (American Standard Tooth Forms) 37
4-6.2-1 L_{10} Bearing Life 38
4-7.5-1 Key Size Versus Shaft Diameter (ASME B17.1) 40
4-7.5-2 Key Size Versus Shaft Diameter (DIN 6885-1) 40
4-7.6.1-1 Fatigue Stress Amplification Factors 40

Nonmandatory Appendices

A Commentary for Chapter 1: Scope, Definitions, and References 49
B Commentary for Chapter 2: Lifter Classifications 53
C Commentary for Chapter 3: Structural Design 55
D Commentary for Chapter 4: Mechanical Design 64
E Commentary for Chapter 5: Electrical Components 67
F Commentary for Chapter 6: Lifting Magnet Design 69

Copyrighted material licensed to Fermi National Laboratory by Clarivate Analytics (US) LLC, subscriptions.techstreet.com, downloaded on 2020-01-31 15:43:32 +0000 by Fermi National Laboratory User.
No further reproduction or distribution is permitted.

FOREWORD

There have been many formal requests for interpretation of the limited structural design criteria stated within ASME B30.20, Below-the-Hook Lifting Devices, a safety standard. As a consequence, industry has for quite some time expressed a need for a comprehensive design standard for below-the-hook lifting devices that would complement the safety requirements of ASME B30.20. All editions of ASME B30.20 have included structural design criteria oriented toward the industrial manufacturing community requiring a minimum design factor of 3, based on the yield strength of the material; recent editions have also included design criteria for the fatigue failure mode. However, members of the construction community expressed the need for design criteria more suitable to their operating conditions, including a lower design factor, and the necessity to address other failure modes such as fracture, shear, and buckling, and design topics such as impact and fasteners.

A Design Task Group was created in 1997 to begin work on a design standard as a companion document to ASME B30.20. The ASME BTH Standards Committee on the Design of Below-the-Hook Lifting Devices was formed out of the Design Task Group and held its organizational meeting on December 5, 1999.

ASME BTH-1–2005, Design of Below-the-Hook Lifting Devices, contained five chapters: Scope and Definitions, Lifter Classifications, Structural Design, Mechanical Design, and Electrical Components. This Standard, intended for general industry and construction, set forth two design categories for lifters based on the magnitude and variation of loading, and operating and environmental conditions. The two design categories provided different design factors for determining allowable static stress limits. Five Service Classes based on load cycles were provided. The Service Class establishes allowable stress range values for lifter structural members and design parameters for mechanical components. ASME BTH-1–2005 was approved by the American National Standards Institute (ANSI) on October 18, 2005.

ASME BTH-1–2008 incorporated editorial revisions and two new mechanical design sections for grip ratio and vacuum lifting device design. ASME BTH-1–2008 was approved by ANSI on September 17, 2008.

ASME BTH-1–2011 incorporated revisions throughout the Standard and the addition of a new mechanical design section for fluid power systems. ASME BTH-1–2011 was approved by ANSI on September 23, 2011.

ASME BTH-1–2014 incorporated into Chapter 4 a section on lifting magnets. Other technical revisions included new requirements for fluid pressure control and electrical system guarding. Along with these technical changes, the nonmandatory Commentary for each chapter was moved to its own respective Nonmandatory Appendix. ASME BTH-1–2014 was approved by ANSI on June 24, 2014.

This revision of ASME BTH-1 includes the addition of Chapter 6: Lifting Magnet Design, an accompanying Nonmandatory Appendix with commentary for the new chapter, and other revisions. Following the approval by the ASME BTH Standards Committee, ANSI approved this edition as an American National Standard, with the new designation ASME BTH-1–2017, on January 6, 2017.

Copyrighted material licensed to Fermi National Laboratory by Clarivate Analytics (US) LLC, subscriptions.techstreet.com, downloaded on 2020-01-31 15:43:32 +0000 by Fermi National Laboratory User.
No further reproduction or distribution is permitted.

ASME BTH STANDARDS COMMITTEE
Design of Below-the-Hook Lifting Devices

(The following is the roster of the Committee at the time of approval of this Standard.)

STANDARDS COMMITTEE OFFICERS

D. R. Verenski, *Chair*
D. Duerr, *Vice Chair*
G. Bolan, *Secretary*

STANDARDS COMMITTEE PERSONNEL

B. B. Bacon, Tennessee Valley Authority
G. Bolan, The American Society of Mechanical Engineers
G. A. Bond, Wood's Powr-Grip Co., Inc.
P. W. Boyd, The Boeing Co.
D. Duerr, 2DM Associates, Inc.
J. D. Edmundson, Konecranes/P&H
A. Faris, Braun Intertec
M. T. Gaunce, SCHUNK
K. M. Jankowski, Walker Magnetics
T. C. Mackey, Washington River Protection Solutions
D. L. McCabe, Babcock and Wilcox Co.
B. A. Pickett, Systems Engineering and Forensic Services
D. T. Rebbin, Bradley Lifting Corp.
J. E. Rea, *Alternate,* Bradley Lifting Corp.
J. W. Rowland III, Consultant
R. S. Stemp, Lampson International, LLC
M. P. Zerba, *Alternate,* Lampson International, LLC
P. D. Sweeney, Riverside Engineering, LLC
D. R. Verenski, Hunter Lift Ltd.
T. J. Brookbank, *Alternate,* Hunter Lift Ltd.
T. D. Waterworth, ENERPAC
S. Barton, *Contributing Member,* Consultant

HONORARY MEMBERS

R. A. Dahlin, Walker Magnetics
J. W. Downs, Jr., Downs Crane and Hoist Co.

Copyrighted material licensed to Fermi National Laboratory by Clarivate Analytics (US) LLC, subscriptions.techstreet.com, downloaded on 2020-01-31 15:43:32 +0000 by Fermi National Laboratory User.
No further reproduction or distribution is permitted.

Copyrighted material licensed to Fermi National Laboratory by Clarivate Analytics (US) LLC, subscriptions.techstreet.com, downloaded on 2020-01-31 15:43:32 +0000 by Fermi National Laboratory User.
No further reproduction or distribution is permitted.

CORRESPONDENCE WITH THE BTH COMMITTEE

General. ASME Standards are developed and maintained with the intent to represent the consensus of concerned interests. As such, users of this Standard may interact with the Committee by requesting interpretations, proposing revisions, and attending Committee meetings. Correspondence should be addressed to:

Secretary, BTH Standards Committee
The American Society of Mechanical Engineers
Two Park Avenue
New York, NY 10016-5990
http://go.asme.org/Inquiry

Proposing Revisions. Revisions are made periodically to the Standard to incorporate changes that appear necessary or desirable, as demonstrated by the experience gained from the application of the Standard. Approved revisions will be published periodically.

The Committee welcomes proposals for revisions to this Standard. Such proposals should be as specific as possible, citing the paragraph number(s), the proposed wording, and a detailed description of the reasons for the proposal, including any pertinent documentation.

Interpretations. Upon request, the BTH Standards Committee will render an interpretation of any requirement of the Standard. Interpretations can only be rendered in response to a written request sent to the Secretary of the BTH Standards Committee.

Requests for interpretation should preferably be submitted through the online Interpretation Submittal Form. The form is accessible at http://go.asme.org/InterpretationRequest. Upon submittal of the form, the Inquirer will receive an automatic e-mail confirming receipt.

If the Inquirer is unable to use the online form, he/she may mail the request to the Secretary of the BTH Standards Committee at the above address. The request for an interpretation should be clear and unambiguous. It is further recommended that the Inquirer submit his/her request in the following format:

Subject:	Cite the applicable paragraph number(s) and the topic of the inquiry in one or two words.
Edition:	Cite the applicable edition of the Standard for which the interpretation is being requested.
Question:	Phrase the question as a request for an interpretation of a specific requirement suitable for general understanding and use, not as a request for an approval of a proprietary design or situation. Please provide a condensed and precise question, composed in such a way that a "yes" or "no" reply is acceptable.
Proposed Reply(ies):	Provide a proposed reply(ies) in the form of "Yes" or "No," with explanation as needed. If entering replies to more than one question, please number the questions and replies.
Background Information:	Provide the Committee with any background information that will assist the Committee in understanding the inquiry. The Inquirer may also include any plans or drawings that are necessary to explain the question; however, they should not contain proprietary names or information.

Requests that are not in the format described above may be rewritten in the appropriate format by the Committee prior to being answered, which may inadvertently change the intent of the original request.

ASME procedures provide for reconsideration of any interpretation when or if additional information that might affect an interpretation is available. Further, persons aggrieved by an interpretation may appeal to the cognizant ASME Committee or Subcommittee. ASME does not "approve," "certify," "rate," or "endorse" any item, construction, proprietary device, or activity.

Attending Committee Meetings. The BTH Standards Committee regularly holds meetings and/or telephone conferences that are open to the public. Persons wishing to attend any meeting and/or telephone conference should contact the Secretary of the BTH Standards Committee.

Copyrighted material licensed to Fermi National Laboratory by Clarivate Analytics (US) LLC, subscriptions.techstreet.com, downloaded on 2020-01-31 15:43:32 +0000 by Fermi National Laboratory User.
No further reproduction or distribution is permitted.

ASME BTH-1–2017
SUMMARY OF CHANGES

Following approval by the ASME BTH Standards Committee and ASME, and after public review, ASME BTH-1–2017 was approved by the American National Standards Institute on January 6, 2017.

ASME BTH-1–2017 includes editorial changes, revisions, and corrections identified by a margin note, **(17)**.

Page	*Location*	*Change*
2–5	1-5.1	(1) Definitions of *applied load(s), dead load, load cycle, maximum stress, minimum stress,* and *rated load* added (2) Definitions of *cycle, load; load(s), applied; load, dead; load, rated; rigging hardware; sling; stress, maximum;* and *stress, minimum* deleted (3) Definitions of *shall* and *should* and location where *design factor* is first used revised
	1-5.3	(1) Definitions of *equalizing sheave* and *running sheave* added (2) Definitions of *sheave, equalizing* and *sheave, running* deleted (3) Location where *back-driving*, L_{10} *bearing life*, and *vacuum pad* are first used revised
	1-5.4	(1) Definitions of *electrical power supply, electric motor, externally powered electromagnet*, and *master switch* added (2) Definitions of *electromagnet, externally powered; motor, electric; power supply, electrical;* and *switch, master* deleted (3) Location where *brake, control system, rectifier,* and *sensor(s)* are first used revised
	1-5.5	Added
	Fig. 1-5.5-1	Added
6–10	1-6.1	(1) Units for a, D_p, and ϕ and nomenclature for h_c, h_p, M_y , $S_{xc,}$ and S_{xt} added (2) Nomenclature for F_r, F_{yf}, and F_{yw} deleted (3) Nomenclature for n_i revised
	1-6.2	(1) Units for A and θ added (2) Nomenclature for S_u and S_y revised
	1-6.3	Added
	1-7	References updated

Copyrighted material licensed to Fermi National Laboratory by Clarivate Analytics (US) LLC, subscriptions.techstreet.com, downloaded on 2020-01-31 15:43:32 +0000 by Fermi National Laboratory User.
No further reproduction or distribution is permitted.

Page	*Location*	*Change*
11	2-2	Revised
	2-2.3	Added
12–15	3-1.2	Revised
	3-1.3.1	Design Category C lifters added
	3-1.3.2	Subparagraph (c) added
	3-1.7	Added
	3-2.1	Nomenclature for F_u revised
	3-2.2	Revised
	3-2.3.2	Revised
	Table 3-2.2-1	Revised in its entirety
	3-2.3.3	Revised
17	3-3.2	(1) In paragraph following eq. (3-40), last sentence added (2) Nomenclature for F_u revised
18	3-3.3.1	Nomenclature for ϕ added
21, 22	3-4.6	Nomenclature for $C_f\, q$ revised
23–34	Table 3-4.4-1	Description for 5.2, Potential Crack Site Initiation for 6.2, and Stress Category for 8.5 revised
36	4-5.4	Reference updated
39–40	4-7.5	Nomenclature for S_u revised
	4-7.6	Reference updated
	4-7.6.3	Nomenclature for S_y following eq. (4-15) revised
41	4-9.2	First paragraph revised
	Fig. 4-9.2-1	In illustration (b), second graphic added
42	4-10.4	Added
	4-12	Deleted
43	5-2.1	Revised
44	5-4.6	Subparagraph (c) added
45	5-5	Editorially revised
	5-6	(1) In paras. 5-6.2 and 5-6.3, subpara. (c) added (2) Paragraph 5-6.4 Deleted
46–48	Chapter 6	Added
49	A-4.2	Revised
50–52	A-4.7	Reference updated
	A-7	References updated
54	B-2.3	Added

Copyrighted material licensed to Fermi National Laboratory by Clarivate Analytics (US) LLC, subscriptions.techstreet.com, downloaded on 2020-01-31 15:43:32 +0000 by Fermi National Laboratory User.
No further reproduction or distribution is permitted.

Page	*Location*	*Change*
55–57	C-1.3	First, eighth, and last paragraphs revised
	C-1.7	Added
	C-2	First paragraph revised
	C-2.2	References in second paragraph updated
58	C-2.3.2	Third paragraph and last two sentences in last paragraph added
	C-2.3.3	Last sentence added
	C-2.4	First paragraph revised
59	C-2.6	Reference to AISC tables updated
60, 61	C-3.2	Second paragraph revised
	C-3.3.1	Third paragraph revised
63	C-5.2	References updated
64	D-2.6	Reference updated
65	D-5.4	Reference updated
69	Nonmandatory Appendix F	Added

Copyrighted material licensed to Fermi National Laboratory by Clarivate Analytics (US) LLC, subscriptions.techstreet.com, downloaded on 2020-01-31 15:43:32 +0000 by Fermi National Laboratory User.
No further reproduction or distribution is permitted.

INTENTIONALLY LEFT BLANK

Copyrighted material licensed to Fermi National Laboratory by Clarivate Analytics (US) LLC, subscriptions.techstreet.com, downloaded on 2020-01-31 15:43:32 +0000 by Fermi National Laboratory User.
No further reproduction or distribution is permitted.

Copyrighted material licensed to Fermi National Laboratory by Clarivate Analytics (US) LLC, subscriptions.techstreet.com, downloaded on 2020-01-31 15:43:32 +0000 by Fermi National Laboratory User.
No further reproduction or distribution is permitted.

DESIGN OF BELOW-THE-HOOK LIFTING DEVICES

Chapter 1
Scope, Definitions, and References

1-1 PURPOSE

This Standard sets forth design criteria for ASME B30.20, Below-the-Hook Lifting Devices. This Standard serves as a guide to designers, manufacturers, purchasers, and users of below-the-hook lifting devices.

1-2 SCOPE

This Standard provides minimum structural and mechanical design and electrical component selection criteria for ASME B30.20, Below-the-Hook Lifting Devices.

The provisions in this Standard apply to the design or modification of below-the-hook lifting devices. Compliance with requirements and criteria that may be unique to specialized industries and environments is outside the scope of this Standard.

Lifting devices designed to this Standard shall comply with ASME B30.20, Below-the-Hook Lifting Devices. ASME B30.20 includes provisions that apply to the marking, construction, installation, inspection, testing, maintenance, and operation of below-the-hook lifting devices.

The provisions defined in this Standard address the most common and broadly applicable aspects of the design of below-the-hook lifting devices. A qualified person shall determine the appropriate methods to be used to address design issues that are not explicitly covered in the Standard so as to provide design factors and/or performance consistent with the intent of this Standard.

1-3 NEW AND EXISTING DEVICES

The effective date of this Standard shall be one year after its date of issuance. Lifting devices manufactured after the effective date shall conform to the requirements of this Standard.

When a lifter is being modified, its design shall be reviewed relative to this Standard, and the need to meet this Standard shall be evaluated by the manufacturer or a qualified person.

1-4 GENERAL REQUIREMENTS

1-4.1 Design Responsibility

Lifting devices shall be designed by, or under the direct supervision of, a qualified person.

1-4.2 Units of Measure

A dual unit format is used. Values are given in U.S. Customary units as the primary units followed by the International System of Units (SI) in parentheses as the secondary units. The values stated in U.S. Customary units are to be regarded as the standard. The SI units in the text have been directly (softly) converted from U.S. Customary units.

1-4.3 Design Criteria

All below-the-hook lifting devices shall be designed for specified rated loads, load geometry, Design Category (see section 2-2), and Service Class (see section 2-3). Resolution of loads into forces and stress values affecting structural members, mechanical components, and connections shall be performed by an accepted analysis method.

1-4.4 Analysis Methods

The allowable stresses and stress ranges defined in this Standard are based on the assumption of analysis by classical strength of material methods (models), although other analysis methods may be used. The analysis techniques and models used by the qualified person shall accurately represent the loads, material properties, and device geometry; stress values resulting from the analysis shall be of suitable form to permit correlation with the allowable stresses defined in this Standard.

1-4.5 Material

The design provisions of this Standard are based on the use of carbon, high-strength low-alloy, or heat-treated constructional alloy steel for structural members and many mechanical components. Other materials may be used, provided the margins of safety and fatigue life are equal to or greater than those required by this Standard.

All ferrous and nonferrous metal used in the fabrication of lifting device structural members and mechanical components shall be identified by an industry-wide or written proprietary specification.

1-4.6 Welding

All welding designs and procedures for lifters fabricated from steel, except for the design strength of welds, shall be in accordance with the requirements of AWS D14.1/D14.1M. The design strength of welds shall be as defined in para. 3-3.4. When conflicts exist between AWS D14.1/D14.1M and this Standard, the requirements of this Standard shall govern.

Welding of lifters fabricated from metals other than steel shall be performed in accordance with a suitable welding specification as determined by a qualified person, provided the quality and inspection requirements are equal to or greater than those required by this Standard.

1-4.7 Temperature

The design provisions of this Standard are considered applicable when the temperature of the lifter structural or mechanical component under consideration is within the range of 25°F to 150°F (–4°C to 66°C). When the temperature of the component is beyond these limits, special additional design considerations may be required. These considerations may include choosing a material that has better cold-temperature or high-temperature properties, limiting the design stresses to a lower percentage of the allowable stresses, or restricting use of the lifter until the component temperature falls within the stated limits.

The design provisions for electrical components are considered applicable when ambient temperatures do not exceed 104°F (40°C). Lifters expected to operate in ambient temperatures beyond this limit shall have electrical components designed for the higher ambient temperature.

1-5 DEFINITIONS

The paragraph given after the definition of a term refers to the paragraph where the term is first used.

(17) 1-5.1 Definitions — General

ambient temperature: the temperature of the atmosphere surrounding the lifting device (para. 1-4.7).

applied load(s): external force(s) acting on a structural member or machine element due to the rated load, dead load, and other forces created by the operation and geometry of the lifting device (para. 1-5.2).

below-the-hook lifting device (lifting device, lifter): a device used for attaching a load to a hoist. The device may contain components such as slings, hooks, and rigging hardware that are addressed by ASME B30 volumes or other standards (section 1-1).

brittle fracture: abrupt cleavage with little or no prior ductile deformation (para. 1-5.1).

dead load: the weights of the parts of the lifting device (para. 1-5.1).

design: the activity in which a qualified person creates devices, machines, structures, or processes to satisfy a human need (section 1-1).

design factor: the ratio of the limit state stress(es) or strength of an element to the permissible internal stress(es) or forces created by the external force(s) that act upon the element (section 1-2).

fatigue: the process of progressive localized permanent material damage that may result in cracks or complete fracture after a sufficient number of load cycles (para. 1-5.1).

fatigue life: the number of load cycles of a specific type and magnitude that a member sustains before failure (para. 1-4.5).

hoist: a machinery unit that is used for lifting and lowering (para. 1-5.1).

lifting attachment: a load-supporting device that is bolted or permanently attached to the lifted load, such as lifting lugs, padeyes, trunnions, and similar appurtenances (Nonmandatory Appendix A, section A-2).

limit state: a condition in which a structure or component becomes unfit for service, such as brittle fracture, plastic collapse, excessive deformation, durability, fatigue, or instability, and is judged either to be no longer useful for its intended function (*serviceability limit state)* or to be unsafe (*strength limit state)* (para. 1-5.1).

load cycle: one sequence of loading defined by a range between minimum and maximum stress (para. 1-5.1).

manufacturer: the person, company, or agency responsible for the design, fabrication, or performance of a below-the-hook lifting device or lifting device component (section 1-1).

maximum stress: highest algebraic stress per load cycle (para. 1-5.1).

mechanical component: a combination of one or more machine elements along with their framework, fastenings, etc., designed, assembled, and arranged to support, modify, or transmit motion, including, but not limited to, the pillow block, screw jack, coupling, clutch, brake, gear reducer, and adjustable-speed transmission (para. 1-4.3).

minimum stress: lowest algebraic stress per load cycle (para. 1-5.1).

modification: any change, addition to, or reconstruction of a lifter component (section 1-2).

Copyrighted material licensed to Fermi National Laboratory by Clarivate Analytics (US) LLC, subscriptions.techstreet.com, downloaded on 2020-01-31 15:43:32 +0000 by Fermi National Laboratory User.
No further reproduction or distribution is permitted.

qualified person: a person who, by possession of a recognized degree in an applicable field or certificate of professional standing, or who, by extensive knowledge, training, and experience, has successfully demonstrated the ability to solve or resolve problems relating to the subject matter and work (section 1-2).

rated load: the maximum load for which the lifting device is designated by the manufacturer (para. 1-4.3).

serviceability limit state: limiting condition affecting the ability of a structure to preserve its maintainability, durability, or function of machinery under normal usage (para. 1-5.1).

shall: a word indicating a requirement (section 1-2).

should: a word indicating a recommendation (para. 2-2.1).

strength limit state: limiting condition affecting the safety of the structure, in which the ultimate load-carrying capacity is reached (para. 1-5.1).

stress concentration: localized stress considerably higher than average (even in uniformly loaded cross sections of uniform thickness) due to abrupt changes in geometry or localized loading (para. 3-4.1).

stress range: algebraic difference between maximum and minimum stress. Tension stress is considered to have the opposite algebraic sign from compression stress (para. 1-4.4).

structural member: a component or rigid assembly of components fabricated from structural shape(s), bar(s), plate(s), forging(s), or casting(s) (para. 1-4.3).

1-5.2 Definitions for Chapter 3

block shear: a mode of failure in a bolted or welded connection that is due to a combination of shear and tension acting on orthogonal planes around the minimum net failure path of the connecting elements (para. 3-3.2).

compact section: a structural member cross section that can develop a fully plastic stress distribution before the onset of local buckling (para. 3-2.3.1).

effective length: the equivalent length Kl used in compression formulas (para. 1-5.2).

effective length factor: the ratio between the effective length and the unbraced length of the member measured between the centers of gravity of the bracing members (para. 1-6.1).

effective net tensile area: portion of the gross tensile area that is assumed to carry the design tension load at the member's connections or at locations of holes, cutouts, or other reductions of cross-sectional area (para. 3-2.1).

effective width: the reduced width of a plate that, with an assumed uniform stress distribution, produces the same effect on the behavior of a structural member as the actual plate width with its nonuniform stress distribution (para. 1-6.1).

faying surface: the plane of contact between two plies of a bolted connection (para. 1-5.2).

gross area: full cross-sectional area of the member (para. 3-2.1).

local buckling: the buckling of a compression element that may precipitate the failure of the whole member at a stress level below the yield stress of the material (para. 1-5.2).

noncompact section: a structural member cross section that can develop the yield stress in compression elements before local buckling occurs, but will not resist inelastic local buckling at strain levels required for a fully plastic stress distribution (para. 3-2.3.2).

prismatic member: a member with a gross cross section that does not vary along its length (para. 1-6.1).

prying force: a force due to the lever action that exists in connections in which the line of application of the applied load is eccentric to the axis of the bolt, causing deformation of the fitting and an amplification of the axial force in the bolt (para. 3-4.5).

slip-critical: a type of bolted connection in which shear is transmitted by means of the friction produced between the faying surfaces by the clamping action of the bolts (para. 1-6.1).

1-5.3 Definitions for Chapter 4 (17)

back-driving: a condition where the load imparts motion to the drive system (para. 1-5.3).

coefficient of static friction: the nondimensional number obtained by dividing the friction force resisting initial motion between two bodies by the normal force pressing the bodies together (para. 4-9.2).

drive system: an assembly of components that governs the starting, stopping, force, speed, and direction imparted to a moving apparatus (para. 1-5.3).

equalizing sheave: a sheave used to equalize tension in opposite parts of a rope. Because of its slight movement, it is not termed a *running sheave* (para. 4-2.3).

fluid power: energy transmitted and controlled by means of a pressurized fluid, either liquid or gas. The term applies to both hydraulics, which uses a pressurized liquid such as oil or water, and pneumatics, which uses compressed air or other gases (section 4-11).

L_{10} *bearing life:* the basic rating or specification life of a bearing (para. 1-6.2).

lock-up: a condition whereby friction in the drive system prevents back-driving (para. 4-5.5).

pitch diameter: the diameter of a sheave measured at the centerline of the rope (para. 4-2.2).

Copyrighted material licensed to Fermi National Laboratory by Clarivate Analytics (US) LLC, subscriptions.techstreet.com, downloaded on 2020-01-31 15:43:32 +0000 by Fermi National Laboratory User.
No further reproduction or distribution is permitted.

running sheave: a sheave that rotates as the load is lifted or lowered (para. 1-5.3).

sheave: a grooved wheel used with a rope to change direction and point of application of a pulling force (para. 1-5.3).

vacuum: pressure less than ambient atmospheric pressure (para. 1-5.3).

vacuum lifter: a below-the-hook lifting device for lifting and transporting loads using a holding force by means of vacuum (section 4-10).

vacuum pad: a device that applies a holding force on the load by means of vacuum (para. 1-6.2).

(17) 1-5.4 Definitions for Chapter 5

brake: a device, other than a motor, used for retarding or stopping motion of an apparatus by friction or power means (para. 1-5.1).

controller: a device or group of devices that govern, in a predetermined manner, the power delivered to the motor to which it is connected (section 5-4).

control panel: an assembly of components that governs the flow of power to or from a motor or other equipment in response to a signal(s) from a control device(s) (para. 5-4.8).

control(s): a device used to govern or regulate the functions of an apparatus (para. 1-5.4).

control system: an assembly or group of devices that govern or regulate the operation of an apparatus (para. 4-11.2).

duty cycle:

$$\text{duty cycle} = \frac{\text{time on}}{\text{time on} + \text{time off}} \times 100$$

and is expressed as a percentage (para. 5-2.1).

EXAMPLE: 3 min on, 2 min off equals

$$\frac{3}{3+2} \times 100 = 60\%$$

electrical power supply: the specifications of the required or supplied electricity such as type (AC or DC), volts, amps, cycles, and phase (para. 5-1.3).

electric motor: a rotating machine that transforms electrical energy into mechanical energy (section 5-2).

externally powered electromagnet: a lifting magnet suspended from a crane that requires power from a source external to the crane (para. 5-6.3).

ground (grounded): electrically connected to earth or to some conducting body that serves in place of the earth (section 5-5).

master switch: a manual switch that dominates the operation of contactors, relays, or other remotely operated devices (para. 5-3.1).

rectifier: a device for converting alternating current into direct current (para. 5-4.7).

sensor(s): a device that responds to a physical stimulus and transmits the resulting signal (para. 5-3.2).

switch: a device for making, breaking, or changing the connections in an electric circuit (para. 1-5.4).

1-5.5 Definitions for Chapter 6 (17)

air gap: the distance between the surface of the ferrous load and the magnetic pole surfaces of the magnet. This gap may be air space caused by an uneven load surface, rust or scale on the load, paint, oil or coolant, dirt, shop cloths, paper wrapping, etc. The air gap has a permeability, μ_0, similar to that of free space (para. 6-2.2).

coercivity: demagnetizing force required to reduce the residual magnetic induction of a permanent magnet, B_r, to zero (para. 1-6.3).

effective magnet contact area: the component of a lifting magnet that is in contact with the load. To be considered part of the effective magnet contact area, the area must be part of the magnetic circuit (para. 1-5.5).

electrically controlled permanent magnet: a lifting magnet that derives holding force from permanent magnet material and requires current only during the period of attachment or release (para. 6-3.4.3.3) [see Fig. 1-5.5-1, illustration (a)].

electromagnet core: the material inside of the power coil designed to absorb the magnetic field and create flux (para. 1-6.3).

electro-permanent magnet core: the permanent magnet material inside of the power coil that is designed to retain residual induction after energizing, thereby creating the flux (para. 1-5.5).

encapsulation compound: the material that replaces the volume of air inside of the magnetic assembly. Commonly used for vibration reduction, heat dissipation, and insulation to the environmental conditions (para. 6-3.7).

flux density (magnetic induction): the magnetic field induced by a magnetic field strength, H, at a given place. The flux density is the flux per unit area normal to the magnetic circuit (para. 1-5.5).

flux path: the component of a lifting magnet through which the flux must travel to reach the effective magnet contact area (para. 1-5.5).

flux source: the component of a lifting magnet that creates the flux. The flux source can be either an electromagnet or a permanent magnet (para. 1-5.5).

hysteresis curve: a four-quadrant graph that shows the relationship between the flux density, B, and the magnetic field strength, H, under varying conditions (para. 6-3.4.3.5).

Copyrighted material licensed to Fermi National Laboratory by Clarivate Analytics (US) LLC, subscriptions.techstreet.com, downloaded on 2020-01-31 15:43:32 +0000 by Fermi National Laboratory User.
No further reproduction or distribution is permitted.

(17) **Fig. 1-5.5-1 Magnetic Lifters**

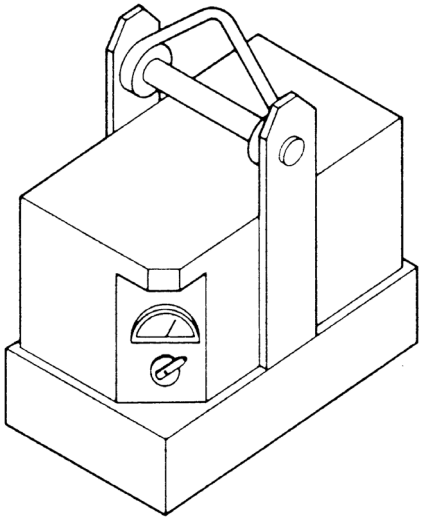

(a) Close Proximity Operated Electrically Controlled Permanent Magnet

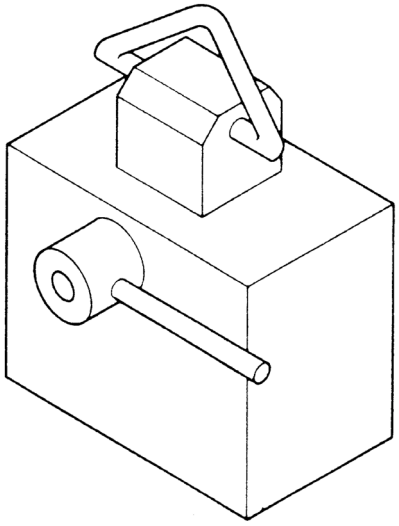

(b) Close Proximity Operated Manually Controlled Permanent Magnet

intrinsic coercive force: ability of magnet material to resist demagnetization (para. 1-6.3).

magnet duty cycle: the percentage of time an electromagnet can be energized, T_e, relative to total cycle time. De-energized time equals T_d. If not rated as continuous, the magnet duty cycle rating includes information on maximum continuous energized time and minimum de-energized time to prevent overheating (para. 6-2.2).

$$\text{magnet duty cycle} = \frac{T_e}{T_e + T_d} \times 100$$

EXAMPLE: 3 min energized, 2 min de-energized equals

$$\frac{3}{3+2} \times 100 = 60\%$$

magnetic circuit: the magnetic circuit consists of a flux source, a flux path, and the effective magnet contact area. In the "attach" condition, the flux path includes the load. The magnetic circuit in general describes a closed-loop circuit that describes the path from a "north" pole to a "south" pole of the flux source (para. 1-5.5).

magnetomotive force: the force that creates flux in a magnetic circuit (para. 1-5.5).

manually controlled permanent magnet: a lifting magnet that derives holding force from permanent magnet material and requires a manual effort during periods of attachment or release (para. 6-3.4.3.3) [see Fig. 1-5.5-1, illustration (b)].

maximum energy product: external energy produced by magnet (para. 1-6.3).

north pole: the pole exhibiting positive magnetic field characteristics when measured by a magnetic device (opposite of a south pole) (para. 1-5.5).

permanent magnet material: a ferromagnetic material that retains a level of residual induction when the external magnetic field strength is reduced to zero (para. 1-5.5).

permeability: the ratio of the flux density in a material at a point to the magnetic field strength at that point (para. 1-5.5).

pole: an area of the magnetic circuit that exhibits a constant flux density of either a positive or negative attitude. This can be in either the effective magnet contact area or the flux source (para. 1-5.5).

power coil: a solenoid wound around a ferromagnetic electromagnet or electro-permanent magnet core, commonly multiple layers of windings deep. The power coil is used for creating a magnetic field in the core (para. 1-5.5).

release mechanism: the component of the lifting magnet that changes the connection to the load between "attach" and "release" (para. 6-3.1).

reluctance: the ratio between the magnetomotive force acting around a magnetic circuit and the resulting flux (para. 1-6.3).

residual magnetic induction: the intensity of magnetic induction that is retained inside of a magnetic material when the external magnetic field strength is reduced to zero, in a closed magnetic circuit scenario (para. 1-5.5).

south pole: the pole exhibiting negative magnetic field characteristics when measured by a magnetic device (opposite of a north pole) (para. 1-5.5).

Copyrighted material licensed to Fermi National Laboratory by Clarivate Analytics (US) LLC, subscriptions.techstreet.com, downloaded on 2020-01-31 15:43:32 +0000 by Fermi National Laboratory User.
No further reproduction or distribution is permitted.

1-6 SYMBOLS

The paragraph given after the definition of a symbol refers to the paragraph where the symbol is first used. Each symbol is defined where it is first used.

NOTE: Some symbols may have different definitions within this Standard.

(17) 1-6.1 Symbols for Chapter 3

$2a$ = length of the nonwelded root face in the direction of the thickness of the tension-loaded plate, in. (mm) (para. 3-4.6)

A = cross-sectional area, in.^{2} (mm^2) (para. 3-2.3.1)

a = distance from the edge of the pinhole to the edge of the plate in the direction of the applied load, in. (mm) (para. 3-3.3.1)

A_f = area of the compression flange, in.^{2} (mm^2) (para. 3-2.3.1)

A_s = tensile stress area, in.^{2} (mm^2) (para. 3-3.2)

A_v = total area of the two shear planes beyond the pinhole, in.^{2} (mm^2) (para. 3-3.3.1)

B = factor for bending stress in tees and double angles (para. 3-2.3.2)

b = width of a compression element, in. (mm) (Table 3-2.2-1)

b_e = actual net width of a pin-connected plate between the edge of the hole and the edge of the plate on a line perpendicular to the line of action of the applied load, in. (mm) (para. 3-3.3.1)

b_{eff} = effective width to each side of the pinhole, in. (mm) (para. 3-3.3.1)

b_f = width of the compression flange, in. (mm) (para. 3-2.3.2)

C_b = bending coefficient dependent on moment gradient (para. 3-2.3.2)

C_c = column slenderness ratio separating elastic and inelastic buckling (para. 3-2.2)

C_f = stress category constant for fatigue analysis (para. 3-4.5)

C_{LTB} = lateral-torsional buckling strength coefficient (para. 3-2.3.2)

C_m = coefficient applied to bending term in interaction equation for prismatic member and dependent on column curvature caused by applied moments (para. 3-2.4)

C_{mx}, C_{my} = coefficient applied to bending term in interaction equation about the x- or y-axis, as indicated (para. 3-2.4)

C_r = strength reduction factor for pin-connected plates (para. 3-3.3.1)

D = outside diameter of circular hollow section, in. (mm) (Table 3-2.2-1)

d = depth of the section, in. (mm) (para. 3-2.3.1); diameter of roller, in. (mm) (para. 3-3.1)

D_h = hole diameter, in. (mm) (para. 3-3.3.1)

D_p = pin diameter, in. (mm) (para. 3-3.3.1)

E = modulus of elasticity
= 29,000 ksi (200 000 MPa) for steel (para. 3-2.2)

Exx = nominal tensile strength of the weld metal, ksi (MPa) (para. 3-3.4.1)

F_a = allowable axial compression stress, ksi (MPa) (para. 3-2.2)

f_a = computed axial compressive stress, ksi (MPa) (para. 3-2.4)

F_b = allowable bending stress, ksi (MPa) (para. 3-2.3.1)

F_{bx}, F_{by} = allowable bending stress about the x- or y-axis, as indicated, ksi (MPa) (para. 3-2.3.5)

f_{bx}, f_{by} = computed bending stress about the x- or y-axis, as indicated, ksi (MPa) (para. 3-2.3.5)

F_{cr} = allowable critical stress due to combined shear and normal stresses, ksi (MPa) (para. 3-2.5)

f_{cr} = critical stress, ksi (MPa) (para. 3-2.5)

F_e' = Euler stress for a prismatic member divided by the design factor, ksi (MPa) (para. 3-2.4)

F_{ex}', F_{ey}' = Euler stress about the x- or y-axis, as indicated, divided by the design factor, ksi (MPa) (para. 3-2.4)

F_p = allowable bearing stress, ksi (MPa) (para. 3-3.1)

F_{sr} = allowable stress range for the detail under consideration, ksi (MPa) (para. 3-4.6)

F_t = allowable tensile stress, ksi (MPa) (para. 3-2.1)

f_t = computed axial tensile stress, ksi (MPa) (para. 3-2.4)

F_t' = allowable tensile stress for a bolt subjected to combined tension and shear stresses, ksi (MPa) (para. 3-3.2)

F_{TH} = threshold value for F_{sr}, ksi (MPa) (para. 3-4.5)

F_u = specified minimum tensile strength, ksi (MPa) (para. 3-2.1)

F_v = allowable shear stress, ksi (MPa) (para. 3-2.3.6)

f_v = computed shear stress, ksi (MPa) (para. 3-2.5)

f_x, f_y = computed normal stress in the x or y direction, as indicated, ksi (MPa) (para. 3-2.5)

Copyrighted material licensed to Fermi National Laboratory by Clarivate Analytics (US) LLC, subscriptions.techstreet.com, downloaded on 2020-01-31 15:43:32 +0000 by Fermi National Laboratory User.
No further reproduction or distribution is permitted.

F_y = specified minimum yield stress, ksi (MPa) (para. 3-2.1)

G = shear modulus of elasticity
= 11,200 ksi (77 200 MPa) for steel (para. 3-2.3.2)

h = clear depth of the plate parallel to the applied shear force at the section under investigation. For rolled shapes, this value may be taken as the clear distance between flanges less the fillet or corner radius, in. (mm) (para. 3-2.3.6)

h_c = twice the distance from the center of gravity to the following: the inside face of the compression flange less the fillet or corner radius, for rolled shapes; the nearest line of fasteners at the compression flange or the inside faces of the compression flange when welds are used, for built-up sections, in. (mm) (Table 3-2.2-1)

h_p = twice the distance from the plastic neutral axis to the nearest line of fasteners at the compression flange or the inside face of the compression flange when welds are used, in. (mm) (Table 3-2.2-1)

I_x = major axis moment of inertia, in.^{4} (mm^4) (para. 3-2.3.2)

I_y = minor axis moment of inertia, in.^{4} (mm^4) (para. 3-2.3.2)

J = torsional constant, in.^{4} (mm^4) (para. 3-2.3.1)

K = effective length factor based on the degree of fixity at each end of the member (para. 3-2.2)

l = the actual unbraced length of the member, in. (mm) (para. 3-2.2)

L_b = distance between cross sections braced against twist or lateral displacement of the compression flange; for beams not braced against twist or lateral displacement, the greater of the maximum distance between supports or the distance between the two points of applied load that are farthest apart, in. (mm) (para. 3-2.3.2)

L_p = maximum laterally unbraced length of a bending member for which the full plastic bending capacity can be realized, uniform moment case (C_b = 1.0), in. (mm) (para. 3-2.3.1)

L_r = laterally unbraced length of a bending member above which the limit state will be lateral-torsional buckling, in. (mm) (para. 3-2.3.2)

M = allowable major axis moment for tees and double-angle members loaded in the plane of symmetry, kip-in. (N·mm) (para. 3-2.3.2)

m = number of slip planes in the connection (para. 3-3.2)

M_1 = smaller bending moment at the end of the unbraced length of a beam taken about the major axis of the member, kip-in. (N·mm) (para. 3-2.3.2)

M_2 = larger bending moment at the end of the unbraced length of a beam taken about the major axis of the member, kip-in. (N·mm) (para. 3-2.3.2)

M_p = plastic moment, kip-in. (N·mm) (para. 3-2.3.1)

M_y = moment at yielding of the extreme fiber, kip-in. (N·mm) (Table 3-2.2-1)

N = desired design fatigue life in load cycles of the detail being evaluated (para. 3-4.6)

N_d = nominal design factor (para. 3-1.3)

N_{eq} = equivalent number of constant-amplitude load cycles at stress range, $S_{R\text{ref}}$ (para. 3-4.2)

n_i = number of load cycles for the ith portion of a variable-amplitude loading spectrum (para. 3-4.2)

P_b = allowable single plane fracture strength beyond the pinhole, kips (N) (para. 3-3.3.1)

P_s = allowable shear capacity of a bolt in a slip-critical connection, kips (N) (para. 3-3.2)

P_t = allowable tensile strength through the pinhole, kips (N) (para. 3-3.3.1)

P_v = allowable double plane shear strength beyond the pinhole, kips (N) (para. 3-3.3.1)

R = distance from the center of the hole to the edge of the plate in the direction of the applied load, in. (mm) (para. 3-3.3.1); variable used in the cumulative fatigue analysis (para. 3-4.6); radius of edge of plate (Table 3-4.4-1)

r = radius of gyration about the axis under consideration, in. (mm) (para. 3-2.2); radius of curvature of the edge of the plate, in. (mm) (Nonmandatory Appendix C, para. C-3.3.1)

R_p = allowable bearing load on rollers, kips/in. (N/mm) (para. 3-3.1)

r_T = radius of gyration of a section comprising the compression flange plus one-third of the compression web area, taken about an axis in the plane of the web, in. (mm) (para. 3-2.3.2)

r_y = minor axis radius of gyration, in. (mm) (para. 3-2.3.1)

Copyrighted material licensed to Fermi National Laboratory by Clarivate Analytics (US) LLC, subscriptions.techstreet.com, downloaded on 2020-01-31 15:43:32 +0000 by Fermi National Laboratory User.
No further reproduction or distribution is permitted.

S_{Ri} = stress range for the ith portion of variable-amplitude loading spectrum, ksi (MPa) (para. 3-4.2)

$S_{R\text{ref}}$ = reference stress range to which N_{eq} relates, ksi (MPa) (para. 3-4.2)

S_x = major axis section modulus, in.^{3} (mm^3) (para. 3-2.3.1)

S_{xc} = major axis section modulus with respect to the compression side of the member, in.^{3} (mm^3) (Table 3-2.2-1)

S_{xt} = major axis section modulus with respect to the tension side of the member, in.^{3} (mm^3) (Table 3-2.2-1)

t = thickness of the plate, in. (mm) (para. 3-2.3.3); thickness of a compression element, in. (mm) (Table 3-2.2-1)

t_p = thickness of the tension-loaded plate, in. (mm) (para. 3-4.6)

t_w = thickness of the web, in. (mm) (Table 3-2.2-1)

w = leg size of the reinforcing or contouring fillet, if any, in the direction of the thickness of the tension-loaded plate, in. (mm) (para. 3-4.6)

Z_x = major axis plastic modulus, in.^{3} (mm^3) (para. 3-2.3.1)

Z' = loss of length of the shear plane in a pin-connected plate, in. (mm) (Nonmandatory Appendix C, para. C-3.3.1)

ϕ = shear plane locating angle for pin-connected plates, deg (para. 3-3.3.1)

(17) 1-6.2 Symbols for Chapter 4

A = effective area of the vacuum pad enclosed between the pad and the material when the pad is fully compressed against the material surface to be lifted, in.^{2} (mm^2) (para. 4-10.1)

C_r = basic dynamic load rating to theoretically endure one million revolutions, per bearing manufacturer, lb (N) (para. 4-6.3)

d = nominal shaft diameter or bearing inside diameter, in. (mm) (para. 4-6.4)

D_t = diametral pitch, in.$^{-1}$ (mm^{-1}) (para. 4-5.3)

F = face width of smaller gear, in. (mm) (para. 4-5.3)

F_a = axial component of the actual bearing load, lb (N) (para. 4-6.3)

F_H = minimum force on each side of the load, lb (N) (para. 4-9.2)

F_r = radial component of the actual bearing load, lb (N) (para. 4-6.3)

F_s = total support force created by the lifter, lb (N) (para. 4-9.2)

H = bearing power factor (para. 4-6.3)

K_A = fatigue stress amplification factor (para. 4-7.6.1)

K_{ST} = stress amplification factor for torsional shear [para. 4-7.6.3(b)]

K_{TB} = stress amplification factor for bending [para. 4-7.6.3(a)]

K_{TD} = stress amplification factor for direct tension [para. 4-7.6.3(a)]

L = bearing length, in. (mm) (para. 4-6.4)

L_{10} = basic rating life exceeded by 90% of bearings tested, hr (para. 4-6.2)

L_G = allowable tooth load in bending, lb (N) (para. 4-5.3)

N = rotational speed, rpm (para. 4-6.3)

N_v = vacuum pad design factor based on orientation of load (para. 4-10.1)

P = average pressure, psi (MPa) (para. 4-6.4)

P_r = dynamic equivalent radial load, lb (N) (para. 4-6.3)

S = computed combined axial/bending stress, ksi (MPa) [para. 4-7.5(a)]

S_a = computed axial stress, ksi (MPa) [para. 4-7.5(a)]

S_{av} = portion of the computed tensile stress not due to fluctuating loads, ksi (MPa) [para. 4-7.6.3(d)]

S_b = computed bending stress, ksi (MPa) [para. 4-7.5(a)]

S_c = computed combined stress, ksi (MPa) [para. 4-7.5(c)]

S_e = fatigue (endurance) limit of polished, unnotched specimen in reversed bending, ksi (MPa) (para. 4-7.6.2)

S_{ec} = corrected fatigue (endurance) limit of shaft in reversed bending, ksi (MPa) (para. 4-7.6.2)

S_f = computed fatigue stress, ksi (MPa) [para. 4-7.6.3(a)]

S_R = portion of the computed tensile stress due to fluctuating loads, ksi (MPa) [para. 4-7.6.3(d)]

S_t = computed axial tensile stress, ksi (MPa) [para. 4-7.6.3(a)]

S_u = specified minimum tensile strength, ksi (MPa) [para. 4-7.5(a)]

S_y = specified minimum yield stress, ksi (MPa) [para. 4-7.6.3(d)]

UPC = calculated ultimate vacuum pad capacity (para. 4-10.1)

V = surface velocity of shaft, ft/min (m/s) (para. 4-6.4)

V_p = minimum vacuum level specified at the pad (para. 4-10.1)

VPR = maximum calculated pad rating (para. 4-10.1)

W = bearing load, lb (N) (para. 4-6.4)

Copyrighted material licensed to Fermi National Laboratory by Clarivate Analytics (US) LLC, subscriptions.techstreet.com, downloaded on 2020-01-31 15:43:32 +0000 by Fermi National Laboratory User.
No further reproduction or distribution is permitted.

X = dynamic radial load factor per bearing manufacturer (para. 4-6.3)
Y = Lewis form factor (Table 4-5.3-1); dynamic axial load factor per bearing manufacturer (para. 4-6.3)
θ = angle of vacuum pad interface surface measured from horizontal, deg (para. 4-10.1)
σ_y = specified minimum yield stress, psi (MPa) (para. 4-5.3)
τ = computed combined shear stress, ksi (MPa) [para. 4-7.5(b)]
τ_{av} = portion of the computed shear stress not due to the fluctuating loads, ksi (MPa) [para. 4-7.6.3(d)]
τ_f = computed combined fatigue shear stress, ksi (MPa) [para. 4-7.6.3(b)]
τ_R = portion of the computed shear stress due to fluctuating loads, ksi (MPa) [para. 4-7.6.3(d)]
τ_T = computed torsional shear stress, ksi (MPa) [para. 4-7.5(b)]
τ_V = computed transverse shear stress, ksi (MPa) [para. 4-7.5(b)]

(17) 1-6.3 Symbols for Chapter 6

NOTE: Calculations for magnet design are commonly performed in SI units (m, kg, s). Therefore, the equations in Chapter 6 are presented in SI units.

A = cross-sectional area of the magnetic circuit or segment of the circuit, m^2 (para. 6-3.5)
A_e = cross-sectional area of electromagnet core, m^2 (para. 6-3.4.2)
A_m = effective magnet contact area, m^2 (para. 6-3.3)
A_p = polar surface area of permanent magnet, m^2 (para. 6-3.4.3.4)
B_e = flux density of electromagnet core, T (para. 6-3.4.2)
$BH_{\max}$ = maximum energy product, N/m^2 (para. 6-3.4.3.5)
B_m = flux density, T (para. 6-3.3)
B_r = residual magnetic induction of a permanent magnet, T (para. 6-3.4.3.4)
C = constant in eq. (6.1) (para. 6-3.3)
F = resultant force, N (para. 6-3.3)
F_m = magnetomotive force of magnetic circuit, A (para. 6-3.4.1)
H_c = coercivity of the permanent magnet, A/m (para. 6-3.4.1)
H_{ci} = intrinsic coercive force, A/m (para. 6-3.4.3.5)
I = current in the coil wire, A (para. 6-3.4.1)
L = magnetic length, m (para. 6-3.4.1)
l = length of the magnetic circuit or segment of the circuit, m (para. 6-3.5)
N = number of turns in the coil (para. 6-3.4.1)
R = reluctance of the magnetic circuit, A/Wb (para. 6-3.5)
R_n = reluctance of an individual section of the magnetic circuit, A/Wb (para. 6-3.5)
R_{tot} = total reluctance of the magnetic circuit, A/Wb (para. 6-3.5)
ϕ_c = flux available to magnetic circuit, Wb (para. 6-3.5)
ϕ_e = flux from electromagnet flux source, Wb (para. 6-3.5)
ϕ_m = total flux required for application, Wb (para. 6-3.3)
ϕ_p = flux from permanent magnet flux source, Wb (para. 6-3.4.3.4)
μ = permeability of the material, henries per meter (H/m) (para. 6-3.5)

1-7 REFERENCES (17)

The following is a list of publications referenced in this Standard:

ANSI/AGMA 2001-D04 (reaffirmed January 2010), Fundamental Rating Factors and Calculation Methods for Involute Spur and Helical Gear Teeth[1]

Publisher: American Gear Manufacturers Association (AGMA), 1001 North Fairfax Street, Suite 500, Alexandria, VA 22314 (www.agma.org)

ANSI/NFPA 70-2014, National Electrical Code[1]

Publisher: National Fire Protection Association (NFPA), 1 Batterymarch Park, Quincy, MA 02169 (www.nfpa.org)

ASME B17.1-1967 (R2013), Keys and Keyseats
ASME B30.20-2013, Below-the-Hook Lifting Devices

Publisher: The American Society of Mechanical Engineers (ASME), Two Park Avenue, New York, NY 10016-5990 (www.asme.org)

ASTM A325, Standard Specification for Structural Bolts, Steel, Heat Treated, 120/105 ksi Minimum Tensile Strength
ASTM A490, Standard Specification for Structural Bolts, Alloy Steel, Heat Treated, 150 ksi Minimum Tensile Strength

Publisher: American Society for Testing and Materials (ASTM International), 100 Barr Harbor Drive, P.O. Box C700, West Conshohocken, PA 19428-2959 (www.astm.org)

AWS D14.1/D14.1M-2005, Specification for Welding of Industrial and Mill Cranes and Other Material Handling Equipment[1]

Publisher: American Welding Society (AWS), 8669 NW 36 Street, No. 130, Miami, FL 33166 (www.aws.org)

[1] May also be obtained from the American National Standards Institute (ANSI), 25 West 43rd Street, New York, NY 10036.

Copyrighted material licensed to Fermi National Laboratory by Clarivate Analytics (US) LLC, subscriptions.techstreet.com, downloaded on 2020-01-31 15:43:32 +0000 by Fermi National Laboratory User.
No further reproduction or distribution is permitted.

DIN 6885-1, Drive Type Fastenings Without Taper Action; Parallel Keys, Keyways, Deep Pattern

Publisher: Deutsches Institut für Normung, e. V. (DIN), Am DIN-Platz Burggrafenstraße 6, 10787 Berlin, Germany (www.din.de)

ICS 2-2000 (R2005), Controllers, Contactors, and Overload Relays Rated 600 Volts

ICS 6-1993 (R2011), Industrial Control and Systems: Enclosures

MG 1-2014, Motors and Generators

Publisher: National Electrical Manufacturers Association (NEMA), 1300 North 17th Street, Suite 900, Arlington, VA 22209 (www.nema.org)

Pilkey, W. D., and Pilkey, D. F., 2008, *Peterson's Stress Concentration Factors*, 3rd edition

Publisher: John Wiley & Sons, Inc., 111 River Street, Hoboken, NJ 07030-5774 (www.wiley.com)

Specification for Structural Steel Buildings, 2010

Publisher: American Institute of Steel Construction (AISC), 1 East Wacker Drive, Suite 700, Chicago, IL 60601 (www.aisc.org)

Copyrighted material licensed to Fermi National Laboratory by Clarivate Analytics (US) LLC, subscriptions.techstreet.com, downloaded on 2020-01-31 15:43:32 +0000 by Fermi National Laboratory User.
No further reproduction or distribution is permitted.

Chapter 2
Lifter Classifications

2-1 GENERAL

A Design Category and Service Class shall be designated for each lifter.

2-1.1 Selection

The selection of a Design Category (static strength criteria) and Service Class (fatigue life criteria) described in sections 2-2 and 2-3 shall be based on the operating conditions (use) and expected life of the lifter.

2-1.2 Responsibility

The selection of Design Category and Service Class shall be the responsibility of a qualified person representing the owner, purchaser, or user of the lifting device. If not specified by the owner, purchaser, or user, the Design Category and Service Class shall be designated by the qualified person responsible for the design.

2-1.3 Identification

The Design Category and Service Class shall be marked on the lifter and appear on quotations, drawings, and documentation associated with the lifter.

2-1.4 Environment

All lifter components are assumed to operate within the temperature range defined in para. 1-4.7 and normal atmospheric conditions (free from excessive dust, moisture, and corrosive environments). Lifter components operating at temperatures outside the range specified in para. 1-4.7 may require additional consideration.

(17) 2-2 DESIGN CATEGORY

The Design Categories defined in paras. 2-2.1, 2-2.2, and 2-2.3 provide for different design factors that establish the stress limits to be used in the design. The design factors are given in para. 3-1.3.

Lifters shall be designed to Design Category B, unless a qualified person determines that Design Category A is appropriate or that Design Category C is required for a special application.

Table 2-3-1 Service Class

Service Class	Load Cycles
0	0–20,000
1	20,001–100,000
2	100,001–500,000
3	500,001–2,000,000
4	Over 2,000,000

2-2.1 Design Category A

(a) Design Category A should be designated when the magnitude and variation of loads applied to the lifter are predictable, where the loading and environmental conditions are accurately defined or not severe.

(b) Design Category A lifting devices shall be limited to Service Class 0.

(c) The nominal design factor for Design Category A shall be in accordance with para. 3-1.3.

2-2.2 Design Category B

(a) Design Category B should be designated when the magnitude and variation of loads applied to the lifter are not predictable, where the loading and environmental conditions are severe or not accurately defined.

(b) The nominal design factor for Design Category B shall be in accordance with para. 3-1.3.

2-2.3 Design Category C (17)

(a) Design Category C should be designated for the design of special-application lifting devices for which the specified design factor is required.

(b) The nominal design factor for Design Category C shall be in accordance with para. 3-1.3.

2-3 SERVICE CLASS

The Service Class of the lifter shall be determined from Table 2-3-1 based on the specified fatigue life (load cycles). The selected Service Class establishes allowable stress range values for structural members (section 3-4) and design parameters for mechanical components (sections 4-6 and 4-7).

Copyrighted material licensed to Fermi National Laboratory by Clarivate Analytics (US) LLC, subscriptions.techstreet.com, downloaded on 2020-01-31 15:43:32 +0000 by Fermi National Laboratory User.
No further reproduction or distribution is permitted.

Chapter 3
Structural Design

3-1 GENERAL

3-1.1 Purpose

This chapter sets forth design criteria for prismatic structural members and connections of a below-the-hook lifting device.

(17) **3-1.2 Loads**

Below-the-hook lifting devices shall be designed to resist the actual applied loads. These loads shall include the rated load, the weights of the individual components of the lifter, and other forces created by the operation of the lifter, such as gripping force or lateral loads. The loads used in the design of the structural and mechanical components of a lifting magnet shall be derived based on the maximum breakaway force of the magnet. Resolution of these loads into member and connection forces shall be performed by an accepted structural analysis method.

3-1.3 Static Design Basis

(17) **3-1.3.1 Nominal Design Factors.** The static strength design of a below-the-hook lifting device shall be based on the allowable stresses defined in sections 3-2 and 3-3. The minimum values of the nominal design factor, N_d, in the allowable stress equations shall be as follows:

N_d = 2.00 for Design Category A lifters
= 3.00 for Design Category B lifters
= 6.00 for Design Category C lifters

(17) **3-1.3.2 Other Design Conditions.** Allowable stresses for design conditions not addressed herein shall be based on the following design factors:

(a) Design factors for Design Category A lifting devices shall be not less than 2.00 for limit states of yielding or buckling and 2.40 for limit states of fracture and for connection design.

(b) Design factors for Design Category B lifting devices shall be not less than 3.00 for limit states of yielding or buckling and 3.60 for limit states of fracture and for connection design.

(c) Design factors for Design Category C lifting devices shall be not less than 6.00 for limit states of yielding or buckling and 7.20 for limit states of fracture and for connection design.

3-1.4 Fatigue Design Basis

Members and connections subject to repeated loading shall be designed so that the maximum stress does not exceed the values given in sections 3-2 and 3-3, and the maximum range of stress does not exceed the values given in section 3-4. Members and connections subjected to fewer than 20,000 load cycles (Service Class 0) need not be analyzed for fatigue.

3-1.5 Curved Members

The design of curved members that are subjected to bending in the plane of the curve shall account for the increase in maximum bending stress due to the curvature, as applicable.

The stress increase due to member curvature need not be considered for flexural members that can develop the full plastic moment when evaluating static strength. This stress increase shall be considered when evaluating fatigue.

3-1.6 Allowable Stresses

All structural members, connections, and connectors shall be proportioned so the stresses due to the loads stipulated in para. 3-1.2 do not exceed the allowable stresses and stress ranges specified in sections 3-2, 3-3, and 3-4. The allowable stresses specified in these sections do not apply to peak stresses in regions of connections, provided the requirements of section 3-4 are satisfied.

3-1.7 Member Properties (17)

The section properties of hollow structural sections (HSS) and pipe shall be based on the design wall thickness equal to 0.93 times the nominal wall thickness for electric-resistance-welded (ERW) shapes and equal to the nominal wall thickness for submerged-arc-welded (SAW) shapes. When the manufacturing method is not known or cannot be reliably determined, the smaller value shall be used.

3-2 MEMBER DESIGN

3-2.1 Tension Members (17)

The allowable tensile stress, F_t, shall not exceed the value given by eq. (3-1) on the gross area nor the value given by eq. (3-2) on the effective net tensile area.

$$F_t = \frac{F_y}{N_d} \tag{3-1}$$

$$F_t = \frac{F_u}{1.20N_d} \tag{3-2}$$

Copyrighted material licensed to Fermi National Laboratory by Clarivate Analytics (US) LLC, subscriptions.techstreet.com, downloaded on 2020-01-31 15:43:32 +0000 by Fermi National Laboratory User.
No further reproduction or distribution is permitted.

where
F_u = specified minimum tensile strength
F_y = specified minimum yield stress

Refer to para. 3-3.3 for pinned connection design requirements.

(17) **3-2.2 Compression Members**

The allowable axial compression stress, F_a, on the gross area where all of the elements of the section meet the provisions of Table 3-2.2-1 and when the largest slenderness ratio, Kl/r, is less than C_c is

$$F_a = \frac{\left[1 - \frac{(Kl/r)^2}{2C_c^2}\right]F_y}{N_d\left[1 + \frac{9(Kl/r)}{40C_c} - \frac{3(Kl/r)^3}{40C_c^3}\right]} \quad (3\text{-}3)$$

$$C_c = \sqrt{\frac{2\pi^2 E}{F_y}} \quad (3\text{-}4)$$

When Kl/r exceeds C_c, the allowable axial compressive stress on the gross section is

$$F_a = \frac{\pi^2 E}{1.15N_d\,(Kl/r)^2} \quad (3\text{-}5)$$

where
E = modulus of elasticity
K = effective length factor based on the degree of fixity at each end of the member
l = the actual unbraced length of the member
r = radius of gyration about the axis under consideration

3-2.3 Flexural Members

3-2.3.1 Major Axis Bending of Compact Sections. The allowable bending stress, F_b, for members with compact sections as defined by Table 3-2.2-1 symmetrical about, and loaded in, the plane of the minor axis, with the flanges continuously connected to the web or webs, and laterally braced at intervals not exceeding L_p as defined by eq. (3-7) for I-shape members and by eq. (3-8) for box members is

$$F_b = \frac{1.10F_y}{N_d} \quad (3\text{-}6)$$

$$L_p = 1.76r_y\sqrt{\frac{E}{F_y}} \le \frac{0.67E}{F_y\,d/A_f} \quad (3\text{-}7)$$

$$L_p = \frac{0.13r_yE}{M_p}\sqrt{JA} \quad (3\text{-}8)$$

where
A = cross-sectional area
A_f = area of the compression flange
d = depth of the section
J = torsional constant
M_p = plastic moment
= $F_y Z_x \le 1.5F_yS_x$ for homogeneous sections
r_y = minor axis radius of gyration
S_x = major axis section modulus
Z_x = major axis plastic modulus

For circular tubes with compact walls as defined by Table 3-2.2-1 or square tubes or square box sections with compact flanges and webs as defined by Table 3-2.2-1 and with the flanges continuously connected to the webs, the allowable bending stress is given by eq. (3-6) for any length between points of lateral bracing.

3-2.3.2 Major Axis and Minor Axis Bending of Compact Sections With Unbraced Length Greater Than L_p and Noncompact Sections. (17) The allowable bending stress for members with compact or noncompact sections as defined by Table 3-2.2-1, loaded through the shear center, bent about either the major or minor axis, and laterally braced at intervals not exceeding L_r for major axis bending as defined by eq. (3-10) for I-shape members and by eq. (3-11) for box members is given by eq. (3-9). For channels bent about the major axis, the allowable bending stress is given by eq. (3-17).

$$F_b = \frac{F_y}{N_d} \quad (3\text{-}9)$$

$$L_r = \sqrt{\frac{3.19r_T^2EC_b}{F_y}} \quad (3\text{-}10)$$

$$L_r = \frac{2r_yE\sqrt{JA}}{F_yS_x} \quad (3\text{-}11)$$

$$C_b = 1.75 + 1.05(M_1/M_2) + 0.3(M_1/M_2)^2 \le 2.3 \quad (3\text{-}12)$$

where M_1 is the smaller and M_2 is the larger bending moment at the ends of the unbraced length, taken about the major axis of the member, and where M_1/M_2 is positive when M_1 and M_2 have the same sign (reverse curvature bending). C_b may be conservatively taken as unity. When the bending moment at any point within an unbraced length is larger than that at both ends of this length, C_b shall be taken as unity [see eq. (3-12)].

For I-shape members and channels bent about the major axis and with unbraced lengths that fall in the ranges defined by either eq. (3-13) or eq. (3-15), the allowable bending stress in tension is given by eq. (3-9). For an I-shape member for which the unbraced length of the compression flange falls into the range defined by eq. (3-13), the allowable bending stress in compression is the larger of the values given by eqs. (3-14) and (3-17). For an I-shape member for which the unbraced length of the compression flange falls into the range defined by eq. (3-15), the allowable bending stress in compression is the larger of the values given by eqs. (3-16) and (3-17).

Copyrighted material licensed to Fermi National Laboratory by Clarivate Analytics (US) LLC, subscriptions.techstreet.com, downloaded on 2020-01-31 15:43:32 +0000 by Fermi National Laboratory User.
No further reproduction or distribution is permitted.

(17) **Table 3-2.2-1 Limiting Width–Thickness Ratios for Compression Elements**

Description of Element	Width–Thickness Ratio	Limiting Width–Thickness Ratios for Members Subject to Axial Compression	Limiting Width–Thickness Ratios for Members Subject to Flexure	
			Compact	Noncompact
Flanges of I-shape rolled beams, channels, and tees	b/t	$0.56\sqrt{E/F_y}$	$0.38\sqrt{E/F_y}$	$1.00\sqrt{E/F_y}$
Flanges of doubly and singly symmetric I-shape built-up sections and plates or angle legs projecting from built-up I-shape sections	b/t	$0.64\sqrt{k_c\,E/F_y}$ [Note (1)]	$0.38\sqrt{E/F_y}$	$0.95\sqrt{k_c\,E/F_L}$ [Notes (1), (2)]
Plates projecting from rolled I-shape sections; outstanding legs of pairs of angles in continuous contact	b/t	$0.56\sqrt{E/F_y}$	. . .	. . .
Legs of single angles; legs of double angles with separators; unstiffened elements, i.e., supported along one edge	b/t	$0.45\sqrt{E/F_y}$	$0.54\sqrt{E/F_y}$	$0.91\sqrt{E/F_y}$
Flanges of all I-shape sections and channels in flexure about the weak axis	b/t	. . .	$0.38\sqrt{E/F_y}$	$1.00\sqrt{E/F_y}$
Stems of tees	d/t	$0.75\sqrt{E/F_y}$	$0.84\sqrt{E/F_y}$	$1.03\sqrt{E/F_y}$
Flanges of rectangular box and hollow structural sections of uniform thickness; flange cover plates and diaphragm plates between lines of fasteners or welds	b/t	$1.40\sqrt{E/F_y}$	$1.12\sqrt{E/F_y}$	$1.40\sqrt{E/F_y}$
Webs of doubly symmetric I-shape sections and channels	h/t_w	$1.49\sqrt{E/F_y}$	$3.76\sqrt{E/F_y}$	$5.70\sqrt{E/F_y}$
Webs of singly symmetric I-shape sections	h_c/t_w	. . .	$\dfrac{\frac{h_c}{h_p}\sqrt{\frac{E}{F_y}}}{\left(0.54\,\frac{M_p}{M_y}-0.09\right)^2} \le 5.70\sqrt{\frac{E}{F_y}}$	$5.70\sqrt{E/F_y}$
Webs of rectangular HSS and boxes	h/t	$1.40\sqrt{E/F_y}$	$2.42\sqrt{E/F_y}$	$5.70\sqrt{E/F_y}$
All other uniformly compressed stiffened elements, i.e., supported along two edges	b/t h/t_w	$1.49\sqrt{E/F_y}$	. . .	$1.49\sqrt{E/F_y}$
Circular hollow sections	D/t	$0.11E/F_y$	$0.07E/F_y$	$0.31E/F_y$

NOTES:

(1) The following values apply:

$$k_c = \frac{4}{\sqrt{h/t_w}} \text{ and } 0.35 \le k_c \le 0.76.$$

(2) The following values apply:

$F_L = 0.7F_y$ for major axis bending of compact and noncompact web built-up I-shape members with $S_{xt}/S_{xc} \ge 0.7$;

$F_L = F_y\,S_{xt}/S_{xc} \ge 0.5F_y$ for major axis bending of compact and noncompact web built-up I-shape members with $S_{xt}/S_{xc} < 0.7$.

Equation (3-17) is applicable only to sections with a compression flange that is solid, is approximately rectangular in shape, and has an area not less than the tension flange. For channels bent about the major axis, the allowable compressive stress is given by eq. (3-17).

$$\sqrt{\frac{3.19EC_b}{F_y}} \le \frac{L_b}{r_T} \le \sqrt{\frac{17.59EC_b}{F_y}} \tag{3-13}$$

$$F_b = \left[1.10 - \frac{F_y(L_b/r_T)^2}{31.9EC_b}\right]\frac{F_y}{N_d} \le \frac{F_y}{N_d} \tag{3-14}$$

$$\frac{L_b}{r_T} > \sqrt{\frac{17.59EC_b}{F_y}} \tag{3-15}$$

$$F_b = C_{\text{LTB}}\,\frac{\pi^2 EC_b}{N_d\,(L_b/r_T)^2} \le \frac{F_y}{N_d} \tag{3-16}$$

For any value of L_b/r_T

$$F_b = C_{\text{LTB}}\,\frac{0.66EC_b}{N_d(L_b d/A_f)} \le \frac{F_y}{N_d} \tag{3-17}$$

Copyrighted material licensed to Fermi National Laboratory by Clarivate Analytics (US) LLC, subscriptions.techstreet.com, downloaded on 2020-01-31 15:43:32 +0000 by Fermi National Laboratory User.
No further reproduction or distribution is permitted.

where

b_f = width of the compression flange

C_{LTB} = 1.00 for beams braced against twist or lateral displacement of the compression flange at the ends of the unbraced length

= $\frac{2.00\,(EI_x/GJ)}{(L_b/b_f)^2} + 0.275 \le 1.00$ for beams not braced against twist or lateral displacement of the compression flange at the ends of the unbraced length

I_x = major axis moment of inertia

L_b = distance between cross sections braced against twist or lateral displacement of the compression flange; for beams not braced against twist or lateral displacement, the greater of the maximum distance between supports or the distance between the two points of applied load that are farthest apart

r_T = radius of gyration of a section comprising the compression flange plus one-third of the compression web area, taken about an axis in the plane of the web

The allowable bending stress for box members for which the unbraced length exceeds L_r as defined by eq. (3-11) shall be calculated by a suitable method as determined by a qualified person.

The allowable major axis moment, M, for tees and double-angle members loaded in the plane of symmetry is

$$M = C_{LTB}\frac{\pi}{N_d}\frac{\sqrt{E\,I_y GJ}}{L_b}\left(B + \sqrt{1 + B^2}\right) \le \frac{F_y a S_x}{N_d} \qquad (3\text{-}18)$$

where

a = 1.0 if the stem is in compression

= 1.25 if the stem is in tension

B = $\pm 2.3(d/L_b)\sqrt{I_y/J}$

C_{LTB} = 1.00 for beams braced against twist or lateral displacement of the compression element at the ends of the unbraced length

= $\sqrt{\frac{0.25\,\sqrt{EI_x/GJ}}{L_b/b_f}} \le 1.00$ for beams not braced against twist or lateral displacement of the compression flange at the ends of the unbraced length if the stem is in tension

= $\sqrt{\frac{0.50\,\sqrt{EI_x/GJ}}{L_b/b_f}} \le 1.00$ for beams not braced against twist or lateral displacement of the compression flange at the ends of the unbraced length if the stem is in compression

G = shear modulus of elasticity

I_y = minor axis moment of inertia

The value B is positive when the stem is in tension and negative when the stem is in compression anywhere along the unbraced length.

Equation (3-18) applies to members with compact or noncompact flanges. The bending strength of members with slender flanges shall be evaluated by suitable means.

3-2.3.3 Major Axis Bending of Solid Rectangular Bars. The allowable bending stress for a rectangular section of depth, d, and thickness, t, is given as follows: (17)

If

$$\frac{L_b d}{t^2} \le \frac{0.08E}{F_y} \qquad (3\text{-}19)$$

$$F_b = \frac{1.25F_y}{N_d} \qquad (3\text{-}20)$$

If

$$\frac{0.08E}{F_y} < \frac{L_b d}{t^2} \le \frac{1.9E}{F_y} \qquad (3\text{-}21)$$

$$F_b = C_{LTB} \times C_b\left[1.52 - 0.274\left(\frac{L_b d}{t^2}\right)\frac{F_y}{E}\right]\frac{F_y}{N_d} \le \frac{1.25F_y}{N_d} \qquad (3\text{-}22)$$

If

$$\frac{L_b d}{t^2} > \frac{1.9E}{F_y} \qquad (3\text{-}23)$$

$$F_b = C_{LTB} \times \frac{1.9EC_b}{N_d(L_b d/t^2)} \le \frac{1.25F_y}{N_d} \qquad (3\text{-}24)$$

where

C_{LTB} = 1.00 for beams braced against twist or lateral displacement of the compression element at the ends of the unbraced length

= $\frac{3.00\sqrt{EI_x/GJ}}{L_b/t} \le 1.00$ for beams not braced against twist or lateral displacement of the compression element at the ends of the unbraced length

3-2.3.4 Minor Axis Bending of Compact Sections, Solid Bars, and Rectangular Sections. For doubly symmetric I- and H-shape members with compact flanges as defined by Table 3-2.2-1 continuously connected to the web and bent about their minor axes, solid round and square bars, and solid rectangular sections bent about their minor axes, the allowable bending stress is

$$F_b = \frac{1.25\,F_y}{N_d} \qquad (3\text{-}25)$$

For rectangular tubes or box shapes with compact flanges and webs as defined by Table 3-2.2-1, with the flanges continuously connected to the webs, and bent

Copyrighted material licensed to Fermi National Laboratory by Clarivate Analytics (US) LLC, subscriptions.techstreet.com, downloaded on 2020-01-31 15:43:32 +0000 by Fermi National Laboratory User.
No further reproduction or distribution is permitted.

about their minor axes, the allowable bending stress is given by eq. (3-6).

3-2.3.5 Biaxial Bending. Members other than cylindrical members subject to biaxial bending with no axial load shall be proportioned to satisfy eq. (3-26). Cylindrical members subject to biaxial bending with no axial load shall be proportioned to satisfy eq. (3-27).

$$\frac{f_{bx}}{F_{bx}} + \frac{f_{by}}{F_{by}} \le 1.0 \tag{3-26}$$

$$\frac{\sqrt{f_{bx}^2 + f_{by}^2}}{F_b} \le 1.0 \tag{3-27}$$

where

F_{bx} or F_{by} = allowable bending stress about the x- or y-axis, as indicated, from para. 3-2.3

f_{bx} or f_{by} = computed bending stress about the x- or y-axis, as indicated

3-2.3.6 Shear on Bars, Pins, and Plates. The average shear stress F_v on bars, pins, and plates for which $h/t \le 2.45\sqrt{E/F_y}$ shall not exceed

$$F_v = \frac{F_y}{N_d\sqrt{3}} \tag{3-28}$$

where

h = clear depth of the plate parallel to the applied shear force at the section under investigation. For rolled shapes, this value may be taken as the clear distance between flanges less the fillet or corner radius.

t = thickness of the plate

Methods used to determine the strength of plates subjected to shear forces for which $h/t > 2.45\sqrt{E/F_y}$ shall provide a design factor with respect to the limit state of buckling not less than the applicable value given in para. 3-1.3.

3-2.4 Combined Axial and Bending Stresses

Members subject to combined axial compression and bending stresses shall be proportioned to satisfy the following requirements:

(a) All members except cylindrical members shall satisfy eqs. (3-29) and (3-30) or eq. (3-31).

(b) When $f_a/F_a \le 0.15$, eq. (3-31) is permitted in lieu of eqs. (3-29) and (3-30).

$$\frac{f_a}{F_a} + \frac{C_{mx} f_{bx}}{\left(1 - \frac{f_a}{F_{ex}'}\right)F_{bx}} + \frac{C_{my} f_{by}}{\left(1 - \frac{f_a}{F_{ey}'}\right)F_{by}} \le 1.0 \tag{3-29}$$

$$\frac{f_a}{F_y/N_d} + \frac{f_{bx}}{F_{bx}} + \frac{f_{by}}{F_{by}} \le 1.0 \tag{3-30}$$

$$\frac{f_a}{F_a} + \frac{f_{bx}}{F_{bx}} + \frac{f_{by}}{F_{by}} \le 1.0 \tag{3-31}$$

(c) Cylindrical members shall satisfy eqs. (3-32) and (3-33) or eq. (3-34).

(d) When $f_a/F_a \le 0.15$, eq. (3-34) is permitted in lieu of eqs. (3-32) and (3-33).

$$\frac{f_a}{F_a} + \frac{C_m\sqrt{f_{bx}^2 + f_{by}^2}}{\left(1 - \frac{f_a}{F_e'}\right)F_b} \le 1.0 \tag{3-32}$$

$$\frac{f_a}{F_y/N_d} + \frac{\sqrt{f_{bx}^2 + f_{by}^2}}{F_b} \le 1.0 \tag{3-33}$$

$$\frac{f_a}{F_a} + \frac{\sqrt{f_{bx}^2 + f_{by}^2}}{F_b} \le 1.0 \tag{3-34}$$

(e) Members subject to combined axial tension and bending stresses shall be proportioned to satisfy the following equations. Equation (3-35) applies to all members except cylindrical members. Equation (3-36) applies to cylindrical members.

$$\frac{f_t}{F_t} + \frac{f_{bx}}{F_{bx}} + \frac{f_{by}}{F_{by}} \le 1.0 \tag{3-35}$$

$$\frac{f_t}{F_t} + \frac{\sqrt{f_{bx}^2 + f_{by}^2}}{F_b} \le 1.0 \tag{3-36}$$

In eqs. (3-29) through (3-36),

F_a = allowable axial compressive stress from para. 3-2.2

f_a = computed axial compressive stress

F_e' = $\dfrac{\pi^2 E}{1.15 N_d (Kl/r)^2}$

F_t = allowable tensile stress from para. 3-2.1

f_t = computed axial tensile stress

where the slenderness ratio, Kl/r, is that in the plane of bending under consideration

$$C_m = C_{mx} = C_{my} = 1.0$$

Lower values for C_m, C_{mx}, and C_{my} may be used if justified by analysis.

3-2.5 Combined Normal and Shear Stresses

Regions of members subject to combined normal and shear stresses shall be proportioned such that the critical stress f_{cr} computed with eq. (3-37) does not exceed the allowable stress F_{cr} defined in the equation.

$$f_{cr} = \sqrt{f_x^2 - f_x f_y + f_y^2 + 3f_v^2} \le F_{cr} = \frac{F_y}{N_d} \tag{3-37}$$

Copyrighted material licensed to Fermi National Laboratory by Clarivate Analytics (US) LLC, subscriptions.techstreet.com, downloaded on 2020-01-31 15:43:32 +0000 by Fermi National Laboratory User.
No further reproduction or distribution is permitted.

where

F_{cr} = allowable critical stress due to combined shear and normal stresses
f_v = computed shear stress
f_x = computed normal stress in the x direction
f_y = computed normal stress in the y direction

3-2.6 Local Buckling

The width–thickness ratios of compression elements shall be less than or equal to the values given in Table 3-2.2-1 to be fully effective.

Methods used to determine the strength of slender compression elements shall provide a design factor with respect to the limit state of buckling no less than the applicable value given in para. 3-1.3.

3-3 CONNECTION DESIGN

3-3.1 General

In connection design, bolts shall not be considered as sharing stress in combination with welds. When the gravity axes of connecting, axially stressed members do not intersect at one point, provision shall be made for bending and shear stresses due to eccentricity in the connection.

The allowable bearing stress, F_p, on the contact area of milled surfaces, fitted bearing stiffeners, and other steel parts in static contact is

$$F_p = \frac{1.8F_y}{1.20N_d} \tag{3-38}$$

The allowable bearing load, R_p, in kips per inch of length (N/mm) on rollers is

$$R_p = \frac{a}{1.20N_d}\left(\frac{F_y - f}{20}\right)c \tag{3-39}$$

where

a = 1.2 if $d \le 25$ in. (635 mm)
= 6.0 if $d > 25$ in. when using U.S. Customary units (F_y, ksi)
= 30.2 if $d > 635$ mm when using SI units (F_y, MPa)
c = d if $d \le 25$ in. (635 mm)
= $\sqrt{d}$ if $d > 25$ in. (635 mm)
d = diameter of roller
f = 13 when using U.S. Customary units (F_y, ksi)
= 90 when using SI units (F_y, MPa)
F_y = lower yield stress of the parts in contact

(17) 3-3.2 Bolted Connections

A bolted connection shall consist of a minimum of two bolts. Bolt spacing and edge distance shall be determined by an accepted design approach so as to provide a minimum design factor of $1.20N_d$ with respect to fracture of the connected parts in tension, shear, or block shear.

The allowable tensile stress, F_t, of the bolt is

$$F_t = \frac{F_u}{1.20N_d} \tag{3-40}$$

The actual tensile stress, f_t, shall be based on the tensile stress area of the bolt and the bolt tension due to the applied loads as defined in para. 3-1.2. The tensile stress in the bolt due to preload is not to be considered in the calculation of f_t.

The allowable shear stress, F_v, of the bolt is

$$F_v = \frac{0.62F_u}{1.20N_d} \tag{3-41}$$

The actual shear stress, f_v, shall be based on the gross area of the bolt if the shear plane passes through the bolt shank, or the root area if the shear plane passes through the threaded length of the bolt and the bolt shear due to the applied loads as defined in para. 3-1.2.

The allowable bearing stress, F_p, of the connected part on the projected area of the bolt is

$$F_p = \frac{2.40F_u}{1.20N_d} \tag{3-42}$$

where

F_u = specified minimum tensile strength of the connected part

The allowable tensile stress, F_t', for a bolt subjected to combined tension and shear stresses is

$$F_t' = \sqrt{F_t^2 - 2.60f_v^2} \tag{3-43}$$

The allowable shear capacity, P_s, of a bolt in a slip-critical connection in which the faying surfaces are clean and unpainted is

$$P_s = m\frac{0.26A_sF_u}{1.20N_d} \tag{3-44}$$

where

A_s = tensile stress area
m = number of slip planes in the connection

The hole diameters for bolts in slip-critical connections shall not be more than 1/16 in. (2 mm) greater than the bolt diameter. If larger holes are necessary, the capacity of the connection shall be reduced accordingly.

The slip resistance of connections in which the faying surfaces are painted or otherwise coated shall be determined by testing.

Bolts in slip-critical connections shall be tightened during installation to provide an initial tension equal to at least 70% of the specified minimum tensile strength of the bolt. A hardened flat washer shall be used under the part turned (nut or bolt head) during installation. Washers shall be used under both the bolt head and nut

Copyrighted material licensed to Fermi National Laboratory by Clarivate Analytics (US) LLC, subscriptions.techstreet.com, downloaded on 2020-01-31 15:43:32 +0000 by Fermi National Laboratory User.
No further reproduction or distribution is permitted.

of ASTM A490 bolts when the connected material has a specified minimum yield stress less than 40 ksi (276 MPa). Only ASTM A325 or ASTM A490 bolts shall be used in slip-critical connections.

Bolted connections subjected to cyclic shear loading shall be designed as slip-critical connections unless the shear load is transferred between the connected parts by means of dowels, keys, or other close-fit elements.

3-3.3 Pinned Connections

(17) **3-3.3.1 Static Strength of the Plates.** The strength of a pin-connected plate in the region of the pinhole shall be taken as the least value of the tensile strength of the effective area on a plane through the center of the pinhole perpendicular to the line of action of the applied load, the fracture strength beyond the pinhole on a single plane parallel to the line of action of the applied load, and the double plane shear strength beyond the pinhole parallel to the line of action of the applied load.

The allowable tensile strength through the pinhole, P_t, shall be calculated as follows:

$$P_t = C_r \frac{F_u}{1.20N_d} 2tb_{\text{eff}} \tag{3-45}$$

where

b_{eff} = effective width to each side of the pinhole

$$C_r = 1 - 0.275\sqrt{1 - \frac{D_p^2}{D_h^2}} \tag{3-46}$$

where

D_h = hole diameter

D_p = pin diameter

The value of C_r may be taken as 1.00 for values of D_p/D_h greater than 0.90.

The effective width shall be taken as the smaller of the values calculated as follows:

$$b_{\text{eff}} = 4t \le b_e \tag{3-47}$$

$$b_{\text{eff}} = b_e\, 0.6\frac{F_u}{F_y}\sqrt{\frac{D_h}{b_e}} \le b_e \tag{3-48}$$

where

b_e = actual width of a pin-connected plate between the edge of the hole and the edge of the plate on a line perpendicular to the line of action of the applied load

The width limit of eq. (3-47) does not apply to plates that are stiffened or otherwise prevented from buckling out of plane.

The allowable single plane fracture strength beyond the pinhole P_b is

$$P_b = C_r \frac{F_u}{1.20N_d}\left[1.13\left(R - \frac{D_h}{2}\right) + \frac{0.92b_e}{1 + b_e/D_h}\right]t \tag{3-49}$$

where

R = distance from the center of the hole to the edge of the plate in the direction of the applied load

The allowable double plane shear strength beyond the pinhole P_v is

$$P_v = \frac{0.70F_u}{1.20\,N_d}A_v \tag{3-50}$$

where

A_v = total area of the two shear planes beyond the pinhole

$$A_v = 2\left[a + \frac{D_p}{2}(1 - \cos\phi)\right]t \tag{3-51}$$

$$\phi = 55\frac{D_p}{D_h} \tag{3-52}$$

where

a = distance from the edge of the pinhole to the edge of the plate in the direction of the applied load

ϕ = shear plane locating angle for pin-connected plates, deg

3-3.3.2 Combined Stresses. If a pinhole is located at a point where significant stresses are induced from member behavior such as tension or bending, local stresses from the function as a pinned connection shall be combined with the gross member stresses in accordance with paras. 3-2.4 and 3-2.5.

3-3.3.3 Fatigue Loading. The average tensile stress on the net area through the pinhole shall not exceed the limits defined in para. 3-4.3 for Stress Category E.

Pinholes in connections designed for Service Classes 1 through 4 shall be drilled, reamed, or otherwise finished to provide a maximum surface roughness of 500 μin. (12.5 μm) around the inside surface of the hole.

3-3.3.4 Bearing Stress. The bearing stress between the pin and the plate, based on the projected area of the pin, shall not exceed the value given by eq. (3-53), where F_y is the yield stress of the pin or plate, whichever is smaller. The bearing stress between the pin and the plate in connections that will rotate under load for a large number of load cycles (Service Class 1 or higher) shall not exceed the value given by eq. (3-54).

$$F_p = \frac{1.25F_y}{N_d} \tag{3-53}$$

$$F_p = \frac{0.63F_y}{N_d} \tag{3-54}$$

Copyrighted material licensed to Fermi National Laboratory by Clarivate Analytics (US) LLC, subscriptions.techstreet.com, downloaded on 2020-01-31 15:43:32 +0000 by Fermi National Laboratory User.
No further reproduction or distribution is permitted.

3-3.3.5 Pin-to-Hole Clearance. Pin-to-hole clearance in connections that will rotate under load or that will experience load reversal in service for a large number of load cycles (Service Class 1 or higher) shall be as required to permit proper function of the connection.

3-3.3.6 Pin Design. Shear forces and bending moments in the pin shall be computed based on the geometry of the connection. Distribution of the loads between the plates and the pin may be assumed to be uniform or may account for the effects of local deformations.

3-3.4 Welded Connections

3-3.4.1 General. For purposes of this section, fillet or groove welds loaded parallel to the axis of the weld shall be designed for shear forces. Groove welds loaded perpendicular to the axis of the weld shall be designed for tension or compression forces. Welded connection design shall provide adequate access for depositing the weld metal. The strength of a weld is governed by either the base material or the deposited weld material as follows:

(a) The design strength of groove welds subject to tension or compression shall be equal to the effective area of the weld multiplied by the allowable stress of the base metal defined in section 3-2.

(b) The design strength of fillet or partial-joint-penetration groove welds subject to shear shall be equal to the effective area of the weld multiplied by the allowable stress F_v given by eq. (3-55). Stresses in the base metal shall not exceed the limits defined in section 3-2.

$$F_v = \frac{0.60Exx}{1.20N_d} \tag{3-55}$$

where

Exx = nominal tensile strength of the weld metal

(c) The design strength of complete-joint-penetration groove welds subject to shear shall be based on the strength of the base metal.

(d) Combination of Welds. If two or more of the general types of welds (paras. 3-3.4.2 through 3-3.4.4) are combined in a single joint, the effective capacity of each shall be separately computed with reference to the axis of the group in order to determine the allowable capacity of the combination.

Effective areas and limitations for groove, fillet, plug, and slot welds are indicated in paras. 3-3.4.2 through 3-3.4.4.

3-3.4.2 Groove Welds. Groove welds may be either complete-joint-penetration or partial-joint-penetration type. The effective weld area for either type is defined as the effective length of weld multiplied by the effective throat thickness.

The effective length of any groove weld is the length over which the weld cross section has the proper effective throat thickness. Intermittent groove welds are not permitted.

Table 3-3.4.2-1 Minimum Effective Throat Thickness of Partial-Penetration Groove Welds

Material Thickness of Thicker Part Joined, in. (mm)	Minimum Effective Throat Thickness, in. (mm)
To 1/4 (6)	1/8 (3)
Over 1/4 (6) to 1/2 (13)	3/16 (5)
Over 1/2 (13) to 3/4 (19)	1/4 (6)
Over 3/4 (19) to 1 1/2 (38)	5/16 (8)
Over 1 1/2 (38) to 2 1/4 (57)	3/8 (10)
Over 2 1/4 (57) to 6 (150)	1/2 (13)
Over 6 (150)	5/8 (16)

GENERAL NOTE: The effective throat does not need to exceed the thickness of the thinner part joined.

The effective throat thickness is the minimum distance from the root of the groove to the face of the weld, less any reinforcement (usually the depth of the groove). For a complete-penetration groove weld, the effective throat thickness is the thickness of the thinner part joined. In partial-penetration groove welds, the effective throat thickness for J- or U-grooves and for bevel or V-grooves with a minimum angle of 60 deg is the depth of the groove. For V-grooves from 45 deg to 60 deg, the effective throat thickness is the depth of the groove minus 1/8 in. (3 mm).

The minimum partial-penetration groove weld effective throat thickness is given in Table 3-3.4.2-1. The minimum throat thickness is determined by the thicker part joined. However, in no case shall the effective throat thickness be less than the size required to transmit the calculated forces.

For bevel and V-groove flare welds, the effective throat thickness is based on the radius of the bar or bend to which it is attached and the flare weld type. For bevel welds, the effective throat thickness is 5/16 times the radius of the bar or bend. For V-groove welds, the effective throat thickness is 1/2 times the radius of the bar or bend.

3-3.4.3 Fillet Welds. Fillet weld size is specified by leg width, but stress is determined by effective throat thickness. The effective throat of a fillet weld shall be the shortest distance from the root to the face of the weld. In general, this effective throat thickness is considered to be on a 45-deg angle from the leg and have a dimension equal to 0.707 times the leg width. The effective weld area of a fillet weld is defined as the effective length of weld multiplied by the effective throat thickness.

The effective length of a fillet weld shall be the overall length of the full-size fillet including end returns. Whenever possible, a fillet weld shall be terminated with end returns. The minimum length of end returns shall be two times the weld size. These returns shall be in the same plane as the rest of the weld.

Copyrighted material licensed to Fermi National Laboratory by Clarivate Analytics (US) LLC, subscriptions.techstreet.com, downloaded on 2020-01-31 15:43:32 +0000 by Fermi National Laboratory User.
No further reproduction or distribution is permitted.

Table 3-3.4.3-1 Minimum Sizes of Fillet Welds

Material Thickness of Thicker Part Joined, in. (mm)	Minimum Size of Fillet Weld, in. (mm)
To 1/4 (6)	1/8 (3)
Over 1/4 (6) to 1/2 (13)	3/16 (5)
Over 1/2 (13) to 3/4 (19)	1/4 (6)
Over 3/4 (19)	5/16 (8)

The minimum effective length of a fillet weld shall be four times the specified weld size, or the weld size shall be considered not to exceed one-fourth of the effective weld length.

For fillet welds in holes or slots, the effective length shall be the length of the centerline of the weld along the plane through the center of the weld throat. The effective weld area shall not exceed the cross-sectional area of the hole or slot.

The minimum fillet weld size shall not be less than the size required to transmit calculated forces nor the size given in Table 3-3.4.3-1. These tabulated sizes do not apply to fillet weld reinforcements of partial- or complete-joint-penetration welds.

The maximum fillet weld size is based on the thickness of the connected parts. Along edges of materials of thickness less than 1/4 in. (6 mm), the weld size shall not exceed the thickness of the material. Along edges where the material thickness is 1/4 in. (6 mm) or greater, the weld size shall not be greater than the material thickness minus 1/16 in. (2 mm).

Intermittent fillet welds may be used to transfer calculated stress across a joint or faying surface when the strength required is less than that developed by a continuous fillet weld of the smallest permitted size and to join components of built-up members. The effective length of any intermittent fillet shall not be less than four times the weld size with a minimum of 1 1/2 in. (38 mm). Intermittent welds shall be made on both sides of the joint for at least 25% of its length. The maximum spacing of intermittent fillet welds is 12 in. (300 mm).

In lap joints, the minimum amount of lap shall be five times the thickness of the thinner part joined, but not less than 1 in. (25 mm). Where lap joints occur in plates or bars that are subject to axial stress, both lapped parts shall be welded along their ends.

Fillet welds shall not be used in skewed T-joints that have an included angle of less than 60 deg or more than 135 deg. The edge of the abutting member shall be beveled, when necessary, to limit the root opening to 1/8 in. (3 mm) maximum.

Fillet welds in holes or slots may be used to transmit shear in lap joints or to prevent the buckling or separation of lapped parts and to join components of built-up members. Fillet welds in holes or slots are not to be considered plug or slot welds.

3-3.4.4 Plug and Slot Welds. Plug and slot welds may be used to transmit shear in lap joints or to prevent buckling of lapped parts and to join component parts of built-up members. The effective shear area of plug and slot welds shall be considered as the nominal cross-sectional area of the hole or slot in the plane of the faying surface.

The diameter of the hole for a plug weld shall not be less than the thickness of the part containing it plus 5/16 in. (8 mm) rounded up to the next larger odd 1/16 in. (2 mm), nor greater than the minimum diameter plus 1/8 in. (3 mm) or 2 1/4 times the thickness of the weld, whichever is greater. The minimum center-to-center spacing of plug welds shall be four times the diameter of the hole.

The length of the slot for a slot weld shall not exceed 10 times the thickness of the weld. The width of the slot shall meet the same criteria as the diameter of the hole for a plug weld. The ends of the slot shall be semicircular or shall have the corners rounded to a radius of not less than the thickness of the part containing it, except for those ends that extend to the edge of the part. The minimum spacing of lines of slot welds in a direction transverse to their length shall be four times the width of the slot. The minimum center-to-center spacing in a longitudinal direction on any line shall be two times the length of the slot.

The thickness of plug or slot welds in material 5/8 in. (16 mm) or less in thickness shall be equal to the thickness of the material. In material more than 5/8 in. (16 mm) thick, the weld thickness shall be at least one-half the thickness of the material but not less than 5/8 in. (16 mm).

3-4 FATIGUE DESIGN

3-4.1 General

When applying the fatigue design provisions defined in this section, calculated stresses shall be based on elastic analysis and stresses shall not be amplified by stress concentration factors for geometrical discontinuities.

3-4.2 Lifter Classifications

Lifter classifications shall be as given in Chapter 2. These classifications are based on use of the lifter at loads of varying magnitude, as discussed in Nonmandatory Appendix C. In reality, actual use of the lifter may differ, possibly significantly, from the defined load spectra. If sufficient lift data are known or can be assumed, the equivalent number of constant-amplitude load cycles can be determined using eq. (3-56).

$$N_{eq} = \Sigma \left(\frac{S_{Ri}}{S_{R\mathrm{ref}}} \right)^3 n_i \qquad (3\text{-}56)$$

Copyrighted material licensed to Fermi National Laboratory by Clarivate Analytics (US) LLC, subscriptions.techstreet.com, downloaded on 2020-01-31 15:43:32 +0000 by Fermi National Laboratory User.
No further reproduction or distribution is permitted.

Table 3-4.3-1 Allowable Stress Ranges, ksi (MPa)

Stress Category (From Table 3-4.4-1)	Service Class 1	2	3	4
A	63 (435)	37 (255)	24 (165)	24 (165)
B	49 (340)	29 (200)	18 (125)	16 (110)
B′	39 (270)	23 (160)	15 (100)	12 (80)
C	35 (240)	21 (145)	13 (90)	10 (70) [Note (1)]
D	28 (190)	16 (110)	10 (70)	7 (48)
E	22 (150)	13 (90)	8 (55)	5 (34)
E′	16 (110)	9 (60)	6 (40)	3 (20)
F	15 (100)	12 (80)	9 (60)	8 (55)
G	16 (110)	9 (60)	7 (48)	7 (48)

NOTE:
(1) Flexural stress range of 12 ksi (80 MPa) permitted at the toe of stiffener welds on flanges.

where

N_{eq} = equivalent number of constant-amplitude load cycles at stress range S_{Rref}

n_i = number of load cycles for the ith portion of a variable-amplitude loading spectrum

S_{Ri} = stress range for the ith portion of a variable-amplitude loading spectrum

S_{Rref} = reference stress range to which N_{eq} relates. This is usually, but not necessarily, the maximum stress range considered.

3-4.3 Allowable Stress Ranges

The maximum stress range shall be that given in Table 3-4.3-1.

Tensile stresses in the base metal of all load-bearing structural elements, including shafts and pins, shall not exceed the stress ranges for Stress Category A.

3-4.4 Stress Categories

The Stress Category can be determined from the joint details given in Table 3-4.4-1.

3-4.5 Tensile Fatigue in Threaded Fasteners

High-strength bolts, common bolts, and threaded rods subjected to tensile fatigue loading shall be designed so that the tensile stress calculated on the tensile stress area due to the combined applied load and prying forces does not exceed the design stress range computed using eq. (3-57). The factor C_f shall be taken as 3.9×10^8. The threshold stress, F_{TH}, shall be taken as 7 ksi (48 MPa).

For joints in which the fasteners are pretensioned to at least 70% of their minimum tensile strength, an analysis of the relative stiffness of the connected parts and fasteners shall be permitted to determine the tensile stress range in the fasteners due to the cyclic loads. Alternatively, the stress range in the fasteners shall be assumed to be equal to the stress on the net tensile area due to 20% of the absolute value of the design tensile load. If the fasteners are not pretensioned to at least 70% of their minimum tensile strength, then all tension shall be assumed to be carried exclusively by the fasteners.

3-4.6 Cumulative Fatigue Analysis (17)

If a more refined component fatigue analysis than provided by the four Service Classes given in Chapter 2 is desired, eq. (3-57) may be used to obtain the allowable stress range for any number of load cycles for the Stress Categories given in Table 3-4.4-1.

$$F_{sr} = R\left(\frac{C_f q}{N}\right)^{ex} \geq F_{TH} \tag{3-57}$$

where $R = 1$, except as follows:

(a) for Stress Category C′ when stresses are in ksi,

$$R = \frac{0.65 - 0.59\left(\frac{2a}{t_p}\right) + 0.72\left(\frac{w}{t_p}\right)}{t_p^{0.167}} \leq 1.0$$

(b) for Stress Category C′ when stresses are in MPa,

$$R = \frac{1.12 - 1.01\left(\frac{2a}{t_p}\right) + 1.24\left(\frac{w}{t_p}\right)}{t_p^{0.167}} \leq 1.0$$

(c) for Stress Category C″ when stresses are in ksi,

$$R = \frac{0.06 + 0.72\left(\frac{w}{t_p}\right)}{t_p^{0.167}} \leq 1.0$$

(d) for Stress Category C″ when stresses are in MPa,

$$R = \frac{0.10 + 1.24\left(\frac{w}{t_p}\right)}{t_p^{0.167}} \leq 1.0$$

Copyrighted material licensed to Fermi National Laboratory by Clarivate Analytics (US) LLC, subscriptions.techstreet.com, downloaded on 2020-01-31 15:43:32 +0000 by Fermi National Laboratory User.
No further reproduction or distribution is permitted.

Use the requirements for Stress Category C if $R = 1.0$.

$2a$ = length of the nonwelded root face in the direction of the thickness of the tension-loaded plate

C_f = constant from Table 3-4.4-1 for the Stress Category

$C_f q$ = 44×10^8 for Stress Categories C, C′, and C″ when stresses are in ksi

= 14.4×10^{11} for Stress Categories C, C′, and C″ when stresses are in MPa

ex = 0.167 for Stress Category F

= 0.333 for all Stress Categories except F

F_{sr} = allowable stress range for the detail under consideration. Stress range is the algebraic difference between the maximum stress and the minimum stress.

F_{TH} = threshold value for F_{sr} as given load in Table 3-4.4-1

N = desired design fatigue life in load cycles of the detail being evaluated. N is the expected number of constant-amplitude stress range cycles and is to be provided by the owner. If no desired fatigue life is specified, a qualified person should use the threshold values, F_{TH}, as the allowable stress range, F_{sr}. For cumulative damage analysis of a varying-amplitude load spectrum, an equivalent number of constant-amplitude load cycles can be calculated using eq. (3-56).

q = 1.0 when stresses are in ksi

= 329 for all Stress Categories except F when stresses are in MPa, except as noted

= 110 000 for Stress Category F when stresses are in MPa, except as noted

t_p = thickness of the tension-loaded plate

w = leg size of the reinforcing or contouring fillet, if any, in the direction of the thickness of the tension-loaded plate

3-5 OTHER DESIGN CONSIDERATIONS

3-5.1 Impact Factors

The design of below-the-hook lifting devices does not normally require the use of an impact factor. The design factors established in this chapter are based on load spectra in which peak impact loads are equal to 50% of the maximum lifted load for Design Category A lifters and 100% of the maximum lifted load for Design Category B lifters. In the event that a lifter is expected to be subjected to impact loading greater than these values, a qualified person shall include an additional impact factor to account for such loads.

3-5.2 Stress Concentrations

Stress concentrations due to holes, changes in section, or similar details shall be accounted for when determining peak stresses in load-carrying elements subject to cyclic loading, unless stated otherwise in this chapter. The need to use peak stresses, rather than average stresses, when calculating static strength shall be determined by a qualified person based on the nature of the detail and the properties of the material being used.

3-5.3 Deflection

It is the responsibility of a qualified person to determine when deflection limits should be applied and to establish the magnitudes of those limits for the design of the mechanisms and structural elements of lifting devices.

Copyrighted material licensed to Fermi National Laboratory by Clarivate Analytics (US) LLC, subscriptions.techstreet.com, downloaded on 2020-01-31 15:43:32 +0000 by Fermi National Laboratory User.
No further reproduction or distribution is permitted.

(17)

Table 3-4.4-1 Fatigue Design Parameters

Description	Stress Category	Constant, C_f	Threshold, F_{TH}, ksi (MPa)	Potential Crack Site Initiation	Illustrative Typical Examples
Section 1 — Plain Material Away From Any Welding					
1.1 Base metal, except noncoated weathering steel, with rolled or cleaned surface. Flame-cut edges with surface roughness value of 1,000 μin. (25 μm) or less, but without re-entrant corners.	A	250×10^8	24 (165)	Away from all welds or structural connections	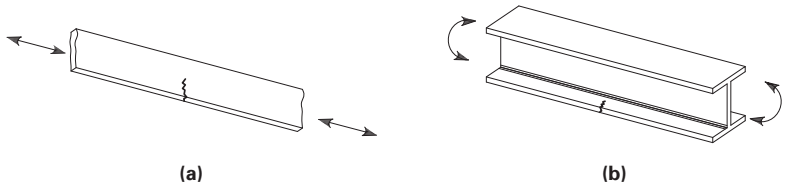
1.2 Noncoated weathering steel base metal with rolled or cleaned surface. Flame-cut edges with surface roughness value of 1,000 μin. (25 μm) or less, but without re-entrant corners.	B	120×10^8	16 (110)	Away from all welds or structural connections	
1.3 Member with drilled or reamed holes. Member with re-entrant corners at copes, cuts, block-outs, or other geometrical discontinuities made to requirements of AISC (2010) Appendix 3, except weld access holes.	B	120×10^8	16 (110)	At any external edge or hole perimeter	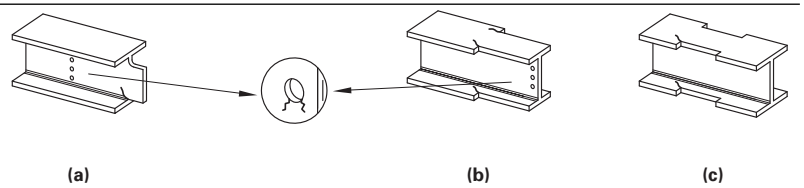
1.4 Rolled cross sections with weld access holes made to requirements of AISC (2010) Section J1.6 and Appendix 3. Members with drilled or reamed holes containing bolts for attachment of light bracing where there is a small longitudinal component of brace force.	C	44×10^8	10 (69)	At re-entrant corner of weld access hole or at any small hole (may contain bolt for minor connections)	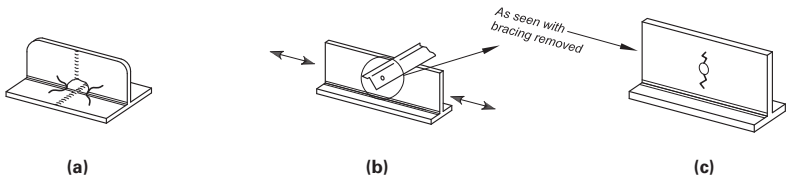

Copyright © American Institute of Steel Construction, Inc. Reprinted with permission. All rights reserved.

Copyrighted material licensed to Fermi National Laboratory by Clarivate Analytics (US) LLC, subscriptions.techstreet.com, downloaded on 2020-01-31 15:43:32 +0000 by Fermi National Laboratory User.
No further reproduction or distribution is permitted.

Table 3-4.4-1 Fatigue Design Parameters (Cont'd)

Description	Stress Category	Constant, C_f	Threshold, F_{TH}, ksi (MPa)	Potential Crack Site Initiation	Illustrative Typical Examples
Section 2 — Connected Material In Mechanically Fastened Joints					
2.1 Gross area of base metal in lap joints connected by high-strength bolts in joints satisfying all requirements for slip-critical connections.	B	120×10^8	16 (110)	Through gross section near hole	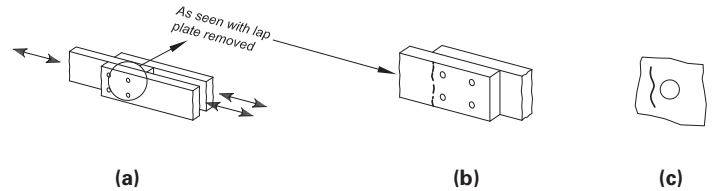 *(Note: figures are for slip-critical bolted connections)*
2.2 Base metal at net section of high-strength bolted joints, designed based on bearing resistance, but fabricated and installed to all requirements for slip-critical connections.	B	120×10^8	16 (110)	In net section originating at side of hole	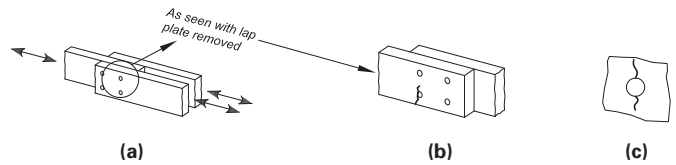 *(Note: figures are for bolted connections designed to bear, meeting the requirements of slip-critical connections)*
2.3 Base metal at the net section of other mechanically fastened joints except eyebars and pin plates.	D	22×10^8	7 (48)	In net section originating at side of hole	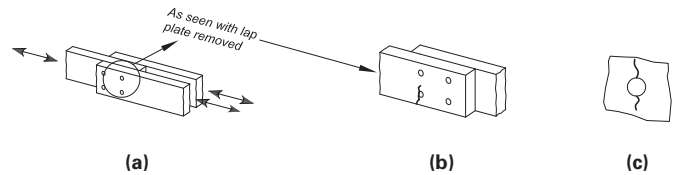 *(Note: figures are for snug-tightened bolts, rivets, or other mechanical fasteners)*
2.4 Base metal at net section of eyebar head or pin plate.	E	11×10^8	4.5 (31)	In net section originating at side of hole	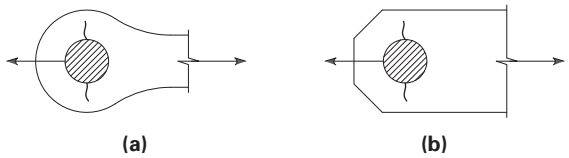

Copyright © American Institute of Steel Construction, Inc. Reprinted with permission. All rights reserved.

Copyrighted material licensed to Fermi National Laboratory by Clarivate Analytics (US) LLC, subscriptions.techstreet.com, downloaded on 2020-01-31 15:43:32 +0000 by Fermi National Laboratory User.
No further reproduction or distribution is permitted.

Table 3-4.4-1 Fatigue Design Parameters (Cont'd)

Description	Stress Category	Constant, C_f	Threshold, F_{TH}, ksi (MPa)	Potential Crack Site Initiation	Illustrative Typical Examples
Section 3 — Welded Joints Joining Components of Built-Up Members					
3.1 Base metal and weld metal in members without attachments built-up of plates or shapes connected by continuous longitudinal complete-joint-penetration groove welds, back gouged and welded from second side, or by continuous fillet welds.	B	120×10^8	16 (110)	From surface or internal discontinuities in weld away from end of weld	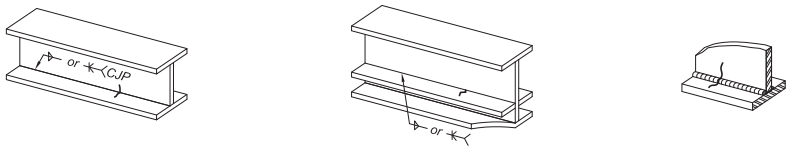
3.2 Base metal and weld metal in members without attachments built-up of internal plates or shapes connected by continuous longitudinal complete-joint-penetration groove welds with backing bars not removed, or by continuous partial-joint-penetration groove welds.	B′	61×10^8	12 (83)	From surface or internal discontinuities in weld, including weld-attaching backing bars	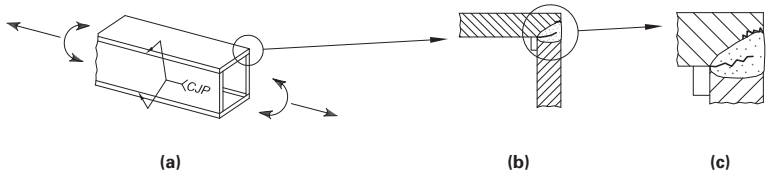
3.3 Base metal at weld metal termination of longitudinal welds at weld access holes in connected built-up members.	D	22×10^8	7 (48)	From the weld termination into the web or flange	
3.4 Base metal at ends of longitudinal intermittent fillet weld segments.	E	11×10^8	4.5 (31)	In connected material at start and stop locations of any weld deposit	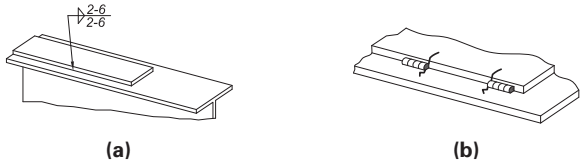
3.5 Base metal at ends of partial-length welded cover plates narrower than the flange having square or tapered ends, with or without welds across the ends; and cover plates wider than the flange with welds across the ends:				In flange at toe of end weld or in flange at termination of longitudinal weld or in edge of flange with wide cover plates	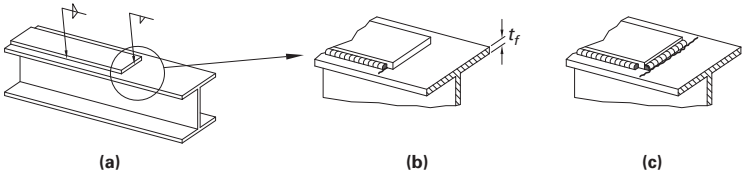
Flange thickness ≤ 0.8 in. (20 mm)	E	11×10^8	4.5 (31)		
Flange thickness > 0.8 in. (20 mm)	E′	3.9×10^8	2.6 (18)		

Copyright © American Institute of Steel Construction, Inc. Reprinted with permission. All rights reserved.

Copyrighted material licensed to Fermi National Laboratory by Clarivate Analytics (US) LLC, subscriptions.techstreet.com, downloaded on 2020-01-31 15:43:32 +0000 by Fermi National Laboratory User.
No further reproduction or distribution is permitted.

Table 3-4.4-1 Fatigue Design Parameters (Cont'd)

Description	Stress Category	Constant, C_f	Threshold, F_{TH}, ksi (MPa)	Potential Crack Site Initiation	Illustrative Typical Examples
Section 3 — Welded Joints Joining Components of Built-Up Members (Cont'd)					
3.6 Base metal at ends of partial-length welded cover plates wider than the flange without welds across the ends.	E′	3.9×10^8	2.6 (18)	In edge of flange at end of cover plate weld	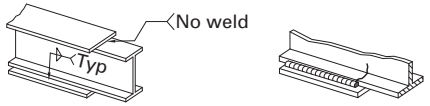 (a) (b)
Section 4 — Longitudinal Fillet Welded End Connections					
4.1 Base metal at junction of axially loaded members with longitudinally welded end connections. Welds shall be on each side of the axis of the member to balance weld stresses:				Initiating from end of any weld termination extending into the base metal	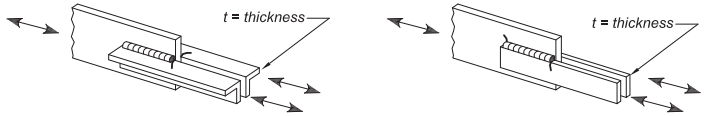 (a) (b)
$t \leq 0.5$ in. (12 mm)	E	10×10^8	4.5 (31)		
$t > 0.5$ in. (12 mm)	E′	3.9×10^8	2.6 (18)		
Section 5 — Welded Joints Transverse to Direction of Stress					
5.1 Base metal and weld metal in or adjacent to complete-joint-penetration groove welded splices in rolled or welded cross sections with welds ground essentially parallel to the direction of stress and with soundness established by radiographic or ultrasonic inspection in accordance with the requirements of subclause 6.12 or 6.13 of AWS D1.1/D1.1M.	B	120×10^8	16 (110)	From internal discontinuities in filler metal or along the fusion boundary	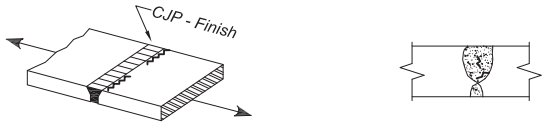 (a) (b)

Copyright © American Institute of Steel Construction, Inc. Reprinted with permission. All rights reserved.

Copyrighted material licensed to Fermi National Laboratory by Clarivate Analytics (US) LLC, subscriptions.techstreet.com, downloaded on 2020-01-31 15:43:32 +0000 by Fermi National Laboratory User.
No further reproduction or distribution is permitted.

Table 3-4.4-1 Fatigue Design Parameters (Cont'd)

Description	Stress Category	Constant, C_f	Threshold, F_{TH}, ksi (MPa)	Potential Crack Site Initiation	Illustrative Typical Examples
Section 5 — Welded Joints Transverse to Direction of Stress (Cont'd)					
5.2 Base metal and weld metal in or adjacent to complete-joint-penetration groove welded splices with welds ground essentially parallel to the direction of stress at transitions in thickness or width made on a slope no greater than 1:2.5 and with weld soundness established by radiographic or ultrasonic inspection in accordance with the requirements of subclause 6.12 or 6.13 of AWS D1.1/D1.1M:				From internal discontinuities in filler metal or along fusion boundary or at start of transition when $F_y \geq 90$ ksi (620 MPa)	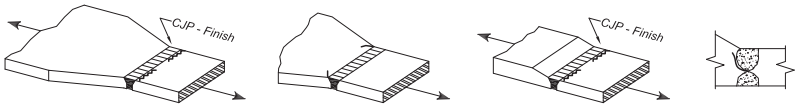 (a) (b) (c) (d) $F_y \geq 90$ ksi (620 MPa) Cat. B′
$F_y < 90$ ksi (620 MPa)	B	120×10^8	16 (110)		
$F_y \geq 90$ ksi (620 MPa)	B′	61×10^8	12 (83)		
5.3 Base metal with $F_y \geq 90$ ksi (620 MPa) and weld metal in or adjacent to complete-joint-penetration groove welded splices with welds ground essentially parallel to the direction of stress at transitions in width made on a radius of not less than 2 ft (600 mm) with the point of tangency at the end of the groove weld and with weld soundness established by radiographic or ultrasonic inspection in accordance with the requirements of subclause 6.12 or 6.13 of AWS D1.1/D1.1M.	B	120×10^8	16 (110)	From internal discontinuities in filler metal or discontinuities along the fusion boundary	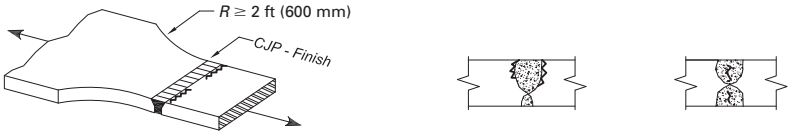 (a) (b) (c) $F_y \geq 90$ ksi (620 MPa) Cat. B′

Copyright © American Institute of Steel Construction, Inc. Reprinted with permission. All rights reserved.

Copyrighted material licensed to Fermi National Laboratory by Clarivate Analytics (US) LLC, subscriptions.techstreet.com, downloaded on 2020-01-31 15:43:32 +0000 by Fermi National Laboratory User.
No further reproduction or distribution is permitted.

Table 3-4.4-1 Fatigue Design Parameters (Cont'd)

Description	Stress Category	Constant, C_f	Threshold, F_{TH}, ksi (MPa)	Potential Crack Site Initiation	Illustrative Typical Examples
Section 5 — Welded Joints Transverse to Direction of Stress (Cont'd)					
5.4 Base metal and weld metal in or adjacent to the toe of complete-joint-penetration T or corner joints or splices, with or without transitions in thickness having slopes no greater than 1:2.5, when weld reinforcement is not removed and with weld soundness established by radiographic or ultrasonic inspection in accordance with the requirements of subclause 6.12 or 6.13 of AWS D1.1/D1.1M.	C	44×10^8	10 (69)	From surface discontinuity at toe of weld extending into base metal or into weld metal	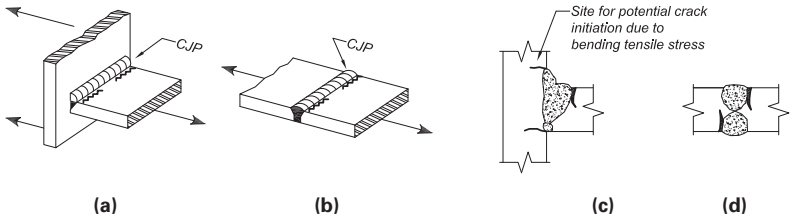
5.5 Base metal and weld metal at transverse end connections of tension-loaded plate elements using partial-joint-penetration groove welds in butt or T or corner joints, with reinforcing or contouring fillets, F_{SR} shall be the smaller of the toe crack or root crack allowable stress range:					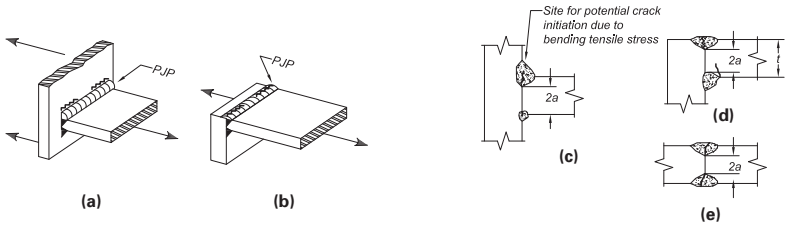
Crack initiating from weld toe	C	44×10^8	10 (69)	Initiating from geometrical discontinuity at toe of weld extending into base metal	
Crack initiating from weld root	C′	Eq. (3-57)	None provided	Initiating at weld root subject to tension extending into and through weld	

Copyright © American Institute of Steel Construction, Inc. Reprinted with permission. All rights reserved.

Copyrighted material licensed to Fermi National Laboratory by Clarivate Analytics (US) LLC, subscriptions.techstreet.com, downloaded on 2020-01-31 15:43:32 +0000 by Fermi National Laboratory User.
No further reproduction or distribution is permitted.

Table 3-4.4-1 Fatigue Design Parameters (Cont'd)

Description	Stress Category	Constant, C_f	Threshold, F_{TH}, ksi (MPa)	Potential Crack Site Initiation	Illustrative Typical Examples
Section 5 — Welded Joints Transverse to Direction of Stress (Cont'd)					
5.6 Base metal and weld metal at transverse end connections of tension-loaded plate elements using a pair of fillet welds on opposite sides of the plate. F_{SR} shall be the smaller of the toe crack or root crack allowable stress range:					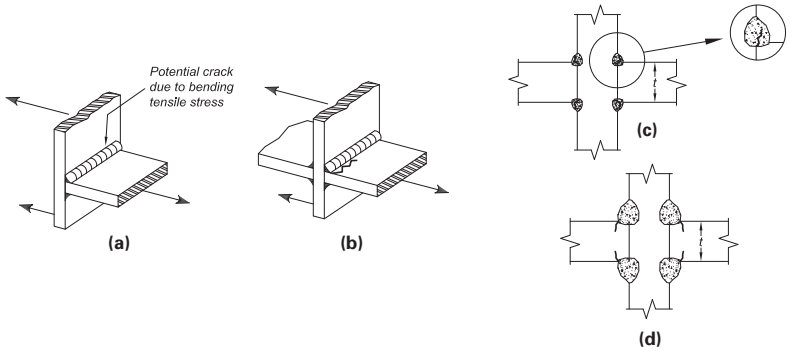
Crack initiating from weld toe	C	44×10^8	10 (69)	Initiating from geometrical discontinuity at toe of weld extending into base metal	
Crack initiating from weld root	C″	Eq. (3-57)	None provided	Initiating at weld root subject to tension extending into and through weld	
5.7 Base metal of tension-loaded plate elements and on girders and rolled beam webs or flanges at toe of transverse fillet welds adjacent to welded transverse stiffeners.	C	44×10^8	10 (69)	From geometrical discontinuity at toe of fillet extending into base metal	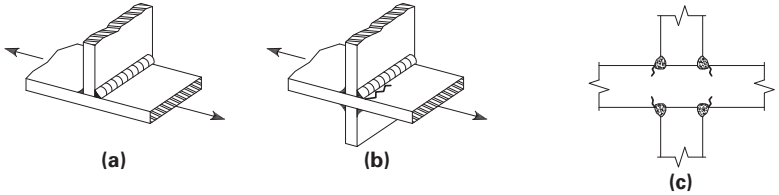

Copyright © American Institute of Steel Construction, Inc. Reprinted with permission. All rights reserved.

Copyrighted material licensed to Fermi National Laboratory by Clarivate Analytics (US) LLC, subscriptions.techstreet.com, downloaded on 2020-01-31 15:43:32 +0000 by Fermi National Laboratory User. No further reproduction or distribution is permitted.

Table 3-4.4-1 Fatigue Design Parameters (Cont'd)

Description	Stress Category	Constant, C_f	Threshold, F_{TH}, ksi (MPa)	Potential Crack Site Initiation	Illustrative Typical Examples
Section 6 — Base Metal at Welded Transverse Member Connections					
6.1 Base metal at details attached by complete-joint-penetration groove welds subject to longitudinal loading only when the detail embodies a transition radius R with the weld termination ground smooth and with weld soundness established by radiographic or ultrasonic inspection in accordance with the requirements of subclause 6.12 or 6.13 of AWS D1.1/D1.1M:				Near point of tangency of radius at edge of member	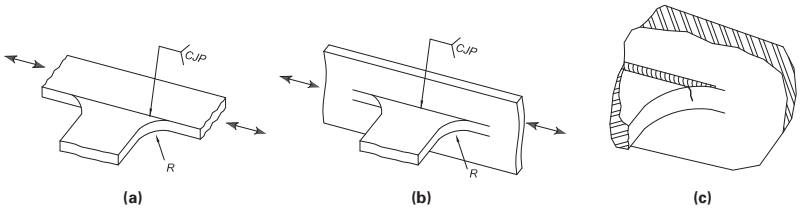
$R \geq 24$ in. (600 mm)	B	120×10^8	16 (110)		
24 in. (600 mm) > $R \geq 6$ in. (150 mm)	C	44×10^8	10 (69)		
6 in. (150 mm) > $R \geq 2$ in. (50 mm)	D	22×10^8	7 (48)		
2 in. (50 mm) > R	E	11×10^8	4.5 (31)		

Copyright © American Institute of Steel Construction, Inc. Reprinted with permission. All rights reserved.

Copyrighted material licensed to Fermi National Laboratory by Clarivate Analytics (US) LLC, subscriptions.techstreet.com, downloaded on 2020-01-31 15:43:32 +0000 by Fermi National Laboratory User.
No further reproduction or distribution is permitted.

Table 3-4.4-1 Fatigue Design Parameters (Cont'd)

Description	Stress Category	Constant, C_f	Threshold, F_{TH}, ksi (MPa)	Potential Crack Site Initiation	Illustrative Typical Examples
Section 6 — Base Metal at Welded Transverse Member Connections (Cont'd)					
6.2 Base metal at details of equal thickness attached by complete-joint-penetration groove welds subject to transverse loading with or without longitudinal loading when the detail embodies a transition radius, R, with the weld termination ground smooth and with weld soundness established by radiographic or ultrasonic inspection in accordance with the requirements of subclause 6.12 or 6.13 of AWS D1.1/D1.1M:					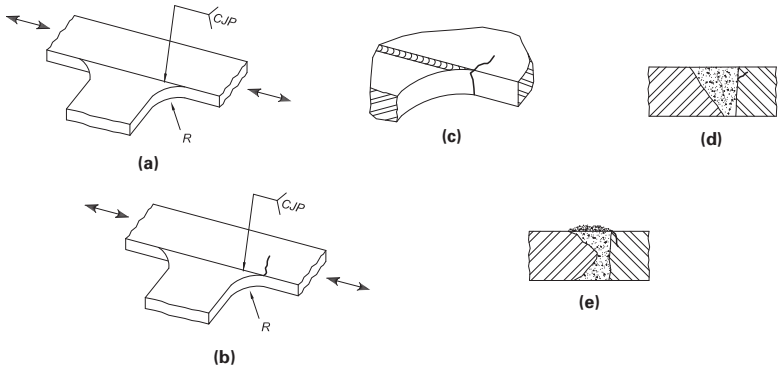
When weld reinforcement is removed:				Near points of tangency of radius or in the weld or at fusion boundary or member or attachment	
$R \geq 24$ in. (600 mm)	B	120×10^8	16 (110)		
24 in. (600 mm) > $R \geq 6$ in. (150 mm)	C	44×10^8	10 (69)		
6 in. (150 mm) > $R \geq 2$ in. (50 mm)	D	22×10^8	7 (48)		
2 in. (50 mm) > R	E	11×10^8	4.5 (31)		
When weld reinforcement is not removed:				At toe of the weld along edge of member or the attachment	
$R \geq 24$ in. (600 mm)	C	44×10^8	16 (110)		
24 in. (600 mm) > $R \geq 6$ in. (150 mm)	C	44×10^8	10 (69)		
6 in. (150 mm) > $R \geq 2$ in. (50 mm)	D	22×10^8	7 (48)		
2 in. (50 mm) > R	E	11×10^8	4.5 (31)		

Copyright © American Institute of Steel Construction, Inc. Reprinted with permission. All rights reserved.

Copyrighted material licensed to Fermi National Laboratory by Clarivate Analytics (US) LLC, subscriptions.techstreet.com, downloaded on 2020-01-31 15:43:32 +0000 by Fermi National Laboratory User.
No further reproduction or distribution is permitted.

Table 3-4.4-1 Fatigue Design Parameters (Cont'd)

Description	Stress Category	Constant, C_f	Threshold, F_{TH}, ksi (MPa)	Potential Crack Site Initiation	Illustrative Typical Examples
Section 6 — Base Metal at Welded Transverse Member Connections (Cont'd)					
6.3 Base metal at details of unequal thickness attached by complete-joint-penetration groove welds subject to transverse loading with or without longitudinal loading when the detail embodies a transition radius, R, with the weld termination ground smooth and with weld soundness established by radiographic or ultrasonic inspection in accordance with the requirements of subclause 6.12 or 6.13 of AWS D1.1/D1.1M:					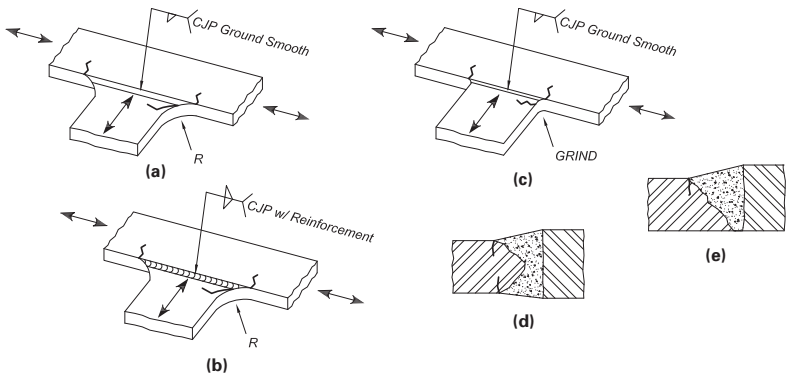
When weld reinforcement is removed:					
$R > 2$ in. (50 mm)	D	22×10^8	7 (48)	At toe of weld along edge of thinner material	
$R \leq 2$ in. (50 mm)	E	11×10^8	4.5 (31)	In weld termination in small radius	
When weld reinforcement is not removed: Any radius	E	11×10^8	4.5 (31)	At toe of weld along edge of thinner material	
6.4 Base metal subject to longitudinal stress at transverse members, with or without transverse stress, attached by fillet or partial-joint-penetration groove welds parallel to direction of stress when the detail embodies a transition radius, R, with weld termination ground smooth:				Initiating in base metal at the weld termination or at the toe of the weld extending into the base metal	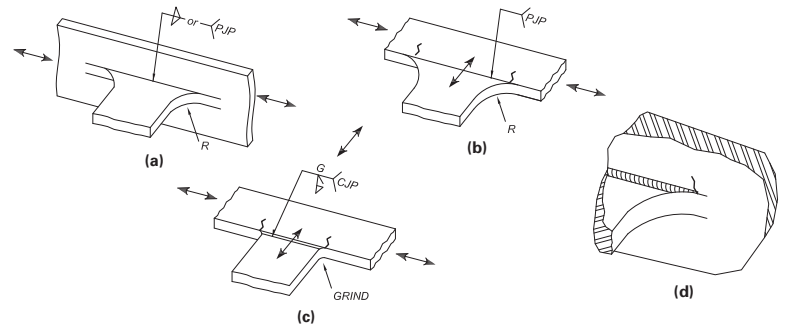
$R > 2$ in. (50 mm)	D	22×10^8	7 (48)		
$R \leq 2$ in. (50 mm)	E	11×10^8	4.5 (31)		

Copyright © American Institute of Steel Construction, Inc. Reprinted with permission. All rights reserved.

Copyrighted material licensed to Fermi National Laboratory by Clarivate Analytics (US) LLC, subscriptions.techstreet.com, downloaded on 2020-01-31 15:43:32 +0000 by Fermi National Laboratory User.
No further reproduction or distribution is permitted.

Table 3-4.4-1 Fatigue Design Parameters (Cont'd)

Description	Stress Category	Constant, C_f	Threshold, F_{TH}, ksi (MPa)	Potential Crack Site Initiation	Illustrative Typical Examples
Section 7 — Base Metal at Short Attachments [Note (1)]					
7.1 Base metal subject to longitudinal loading at details with welds parallel or transverse to the direction of stress where the detail embodies no transition radius and with detail length in direction of stress, a, and thickness of attachment, b:				Initiating in base metal at the weld termination or at the toe of the weld extending into the base metal	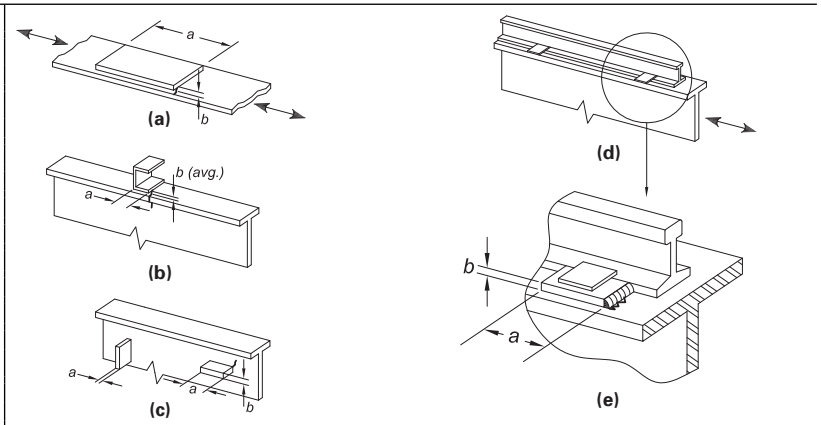
a < 2 in. (50 mm)	C	44×10^8	10 (69)		
2 in. (50 mm) ≤ a ≤ lesser of 12b or 4 in. (100 mm)	D	22×10^8	7 (48)		
a > 12b or 4 in. (100 mm), when b ≤ 1 in. (25 mm)	E	11×10^8	4.5 (31)		
a > lesser of 12b or 4 in. (100 mm), when b > 1 in. (25 mm)	E′	3.9×10^8	2.6 (18)		
7.2 Base metal subject to longitudinal stress at details attached by fillet or partial-joint-penetration groove welds, with or without transverse load on detail, when the detail embodies a transition radius, R, with weld termination ground smooth:				Initiating in base metal at the weld termination, extending into the base metal	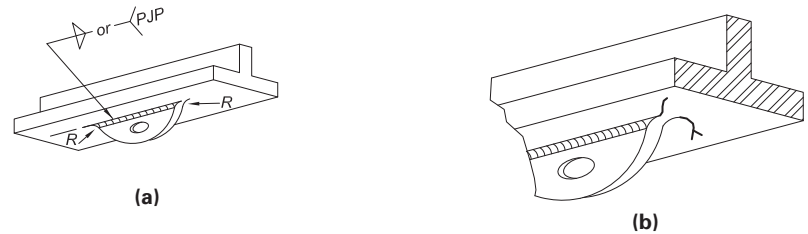
R > 2 in. (50 mm)	D	22×10^8	7 (48)		
R ≤ 2 in. (50 mm)	E	11×10^8	4.5 (31)		
Section 8 — Miscellaneous					
8.1 Base metal at steel headed stud anchors attached by fillet or automatic stud welding.	C	44×10^8	10 (69)	At toe of weld in base metal	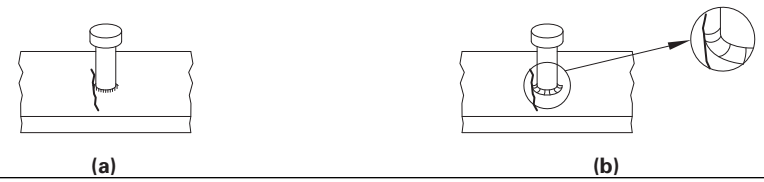

Copyright © American Institute of Steel Construction, Inc. Reprinted with permission. All rights reserved.

Copyrighted material licensed to Fermi National Laboratory by Clarivate Analytics (US) LLC, subscriptions.techstreet.com, downloaded on 2020-01-31 15:43:32 +0000 by Fermi National Laboratory User.
No further reproduction or distribution is permitted.

Table 3-4.4-1 Fatigue Design Parameters (Cont'd)

Description	Stress Category	Constant, C_f	Threshold, F_{TH}, ksi (MPa)	Potential Crack Site Initiation	Illustrative Typical Examples
Section 8 — Miscellaneous (Cont'd)					
8.2 Shear on throat of continuous or intermittent longitudinal or transverse fillet welds.	F	150×10^{10}	8 (55)	Initiating at the root of the fillet weld, extending into the weld	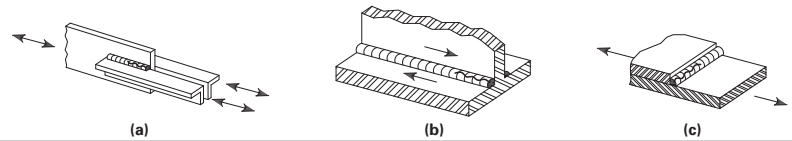
8.3 Base metal at plug or slot welds.	E	11×10^{8}	4.5 (31)	Initiating in the base metal at the end of the plug or slot weld, extending into the base metal	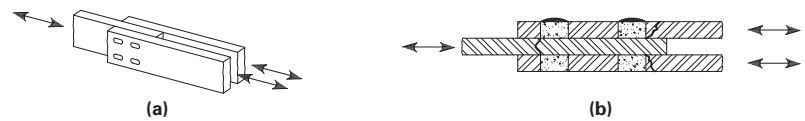
8.4 Shear on plug or slot welds.	F	150×10^{10} [eq. (3-57)]	8 (55)	Initiating in the weld at the faying surface, extending into the weld	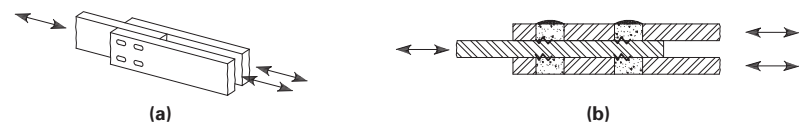
8.5 Snug-tightened high-strength bolts; common bolts; threaded anchor rods and hanger rods with cut, ground, or rolled threads. Stress range on tensile stress area due to live load plus prying action when applicable.	G	3.9×10^{8}	7 (48)	Initiating at the root of the threads, extending into the fastener	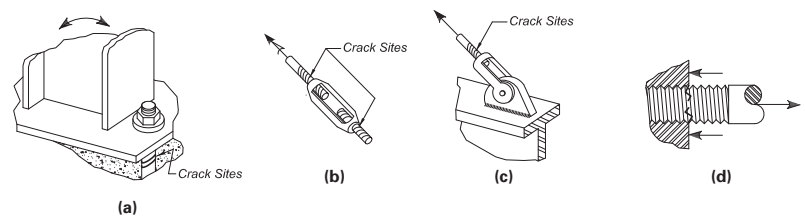

NOTE:

(1) *Attachment* as used herein is defined as any steel detail welded to a member, which by its mere presence and independent of its loading, causes a discontinuity in the stress flow in the member and thus reduces the fatigue resistance.

Copyright © American Institute of Steel Construction, Inc. Reprinted with permission. All rights reserved.

Copyrighted material licensed to Fermi National Laboratory by Clarivate Analytics (US) LLC, subscriptions.techstreet.com, downloaded on 2020-01-31 15:43:32 +0000 by Fermi National Laboratory User.
No further reproduction or distribution is permitted.

Chapter 4
Mechanical Design

4-1 GENERAL

4-1.1 Purpose

This chapter sets forth design criteria for machine elements of a below-the-hook lifting device.

4-1.2 Relation to Chapter 3

Mechanical components of the lifting device that are stressed by the force(s) created during the lift or movement of the load shall be sized in accordance with this chapter and Chapter 3 of this Standard. The most conservative design shall be selected for use. All other mechanical components shall be designed to the requirements of this chapter.

4-2 SHEAVES

4-2.1 Sheave Material

Sheaves shall be fabricated of material specified by the lifting device manufacturer or qualified person.

4-2.2 Running Sheaves

Pitch diameter for running sheaves should not be less than 16 times the nominal diameter of the wire rope used. When the lifting device's sheaves are reeved into the sheaves on the hoist, the pitch diameter and configuration of the hoist shall be considered in the design.

4-2.3 Equalizing Sheaves

The pitch diameter of equalizing sheaves shall not be less than one-half of the diameter of the running sheaves, nor less than 12 times the wire rope diameter when using 6 × 37 class wire rope or 15 times the wire rope diameter when using 6 × 19 class wire rope.

4-2.4 Shaft Requirement

Sheave assemblies should be designed based on a removable shaft.

4-2.5 Lubrication

Means for lubricating sheave bearings shall be provided.

4-2.6 Sheave Design

Sheave grooves shall be smooth and free from surface irregularities that could cause wire rope damage. The groove radius of a new sheave shall be a minimum of 6% larger than the radius of the wire rope as shown in Fig. 4-2.6-1. The cross-sectional radius of the groove should form a close-fitting saddle for the size of the wire rope used, and the sides of the grooves should be tapered outwardly to assist entrance of the wire rope into the groove. Flange corners should be rounded, and rims should run true around the axis of rotation.

Fig. 4-2.6-1 Sheave Dimensions

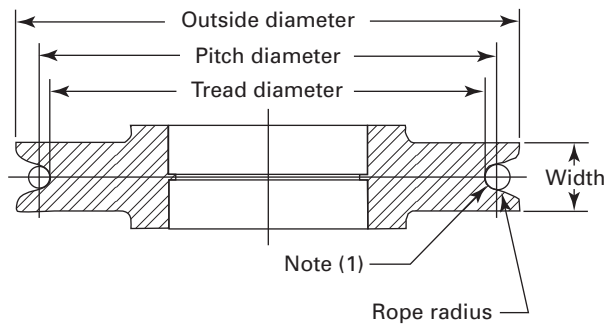

NOTE:
(1) Groove radius = rope radius × 1.06.

Fig. 4-2.7-1 Sheave Gap

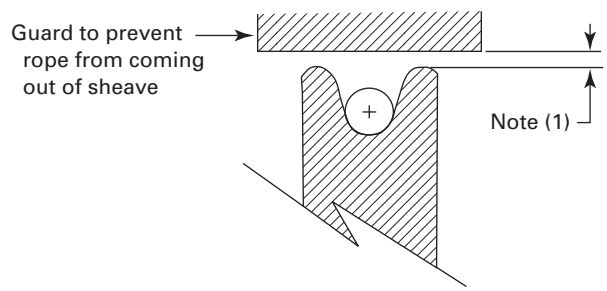

NOTE:
(1) $\frac{1}{8}$ in. (3 mm) or a distance of $\frac{3}{8}$ times the rope diameter, whichever is smaller.

4-2.7 Sheave Guard

Sheaves shall be guarded to prevent inadvertent wire rope jamming or coming out of the sheave. The guard shall be placed within $\frac{1}{8}$ in. (3 mm) to the sheave, or a distance of $\frac{3}{8}$ times the wire rope diameter, whichever is smaller, as shown in Fig. 4-2.7-1.

Copyrighted material licensed to Fermi National Laboratory by Clarivate Analytics (US) LLC, subscriptions.techstreet.com, downloaded on 2020-01-31 15:43:32 +0000 by Fermi National Laboratory User.
No further reproduction or distribution is permitted.

4-3 WIRE ROPE

4-3.1 Relation to Other Standards

Wire rope reeved through the lifting device and the hoist shall conform to the requirements of the hoist.

4-3.2 Rope Selection

Wire rope shall be of a recommended construction for lifting service. The qualified person shall consider other factors (i.e., type of end connection, D/d ratio, sheave bearing friction, etc.) that affect the wire rope strength to ensure the 5:1 safety factor is maintained.

4-3.3 Environment

Wire rope material selection shall be appropriate for the environment in which it is to be used.

4-3.4 Fleet Angle

The wire rope fleet angle for sheaves should be limited to a 1 in 12 slope (4 deg, 45 min).

4-3.5 Rope Ends

Wire rope ends shall be attached to the lifting device in a manner to prevent disengagement during operation of the lifting device.

4-3.6 Rope Clips

Wire rope clips shall be drop-forged steel of the single-saddle (U-bolt) or double-saddle type. Malleable cast iron clips shall not be used. For spacing, number of clips, and torque values, refer to the clip manufacturer's recommendations. Wire rope clips attached with U-bolts shall have the U-bolt over the dead end of the wire rope and live rope resting in the clip saddle. Clips shall be tightened evenly to the recommended torque. After the initial load is applied to the wire rope, the clip nuts shall be retightened to the recommended torque to compensate for any decrease in wire rope diameter caused by the load.

4-4 DRIVE SYSTEMS

4-4.1 Drive Adjustment

Drive systems that contain belts, chains, or other flexible transmission devices should have provisions for adjustment.

4-4.2 Drive Design

The lifting device manufacturer or qualified person shall specify drive system components such as couplings, belts, pulleys, chains, sprockets, and clutches.

4-4.3 Commercial Components

Commercial components used in the drive system of a lifting device shall be sized so the maximum load rating specified by the manufacturer is not exceeded under worst-case loadings.

4-4.4 Lubrication

Means for lubricating and inspecting drive systems shall be provided.

4-4.5 Operator Protection

All motion hazards associated with the operation of mechanical power transmission components shall be eliminated by design of the equipment or protection by a guard, device, safe distance, or safe location. All motion hazard guards shall

(a) prevent entry of hands, fingers, or other parts of the body into a point of hazard by reaching through, over, under, or around the guard

(b) not create additional motion hazards between the guard and the moving part

(c) utilize fasteners not readily removable by people other than authorized persons

(d) not cause any additional hazards, if openings are provided for lubrication, adjustment, or inspection

(e) reduce the likelihood of personal injury due to breakage of component parts

(f) be designed to hold the weight of a 200-lb (91-kg) person without permanent deformation, if used as a step

4-5 GEARING

4-5.1 Gear Design

The lifting device manufacturer or qualified person shall specify the types of gearing.

4-5.2 Gear Material

Gears and pinions shall be fabricated of material having adequate strength and durability to meet the requirements for the intended Service Class and manufactured to AGMA quality class 5 or better.

4-5.3 Gear Loading

The allowable tooth load in bending, L_G, of spur and helical gears is

$$L_G = \frac{\sigma_y F Y}{N_d D_t} \tag{4-1}$$

where

D_t = diametral pitch, in.$^{-1}$ (mm^{-1})
F = face width of smaller gear, in. (mm)
L_G = allowable tooth load in bending, lb (N)
N_d = design factor (per para. 3-1.3)
Y = Lewis form factor as defined in Table 4-5.3-1
σ_y = specified minimum yield stress, psi (MPa)

4-5.4 Relation to Other Standards (17)

As an alternative to the Lewis formula in eq. (4-1), spur and helical gears may be based on ANSI/AGMA 2001-D04 (reaffirmed January 2010), Fundamental Rating Factors and Calculation Methods for Involute Spur and Helical Gear Teeth.

Copyrighted material licensed to Fermi National Laboratory by Clarivate Analytics (US) LLC, subscriptions.techstreet.com, downloaded on 2020-01-31 15:43:32 +0000 by Fermi National Laboratory User.
No further reproduction or distribution is permitted.

Copyrighted material licensed to Fermi National Laboratory by Clarivate Analytics (US) LLC, subscriptions.techstreet.com, downloaded on 2020-01-31 15:43:32 +0000 by Fermi National Laboratory User.
No further reproduction or distribution is permitted.

Table 4-5.3-1 Strength Factors for Calculating Load Capacity (American Standard Tooth Forms)

	Strength Factors, *Y*, for Use With Diametral Pitch		
Number of Teeth	$14\frac{1}{2}$ deg Composite and Involute	20 deg Full Depth Involute System	20 deg Stub-Tooth Involute System
12	0.210	0.245	0.311
13	0.220	0.261	0.324
14	0.226	0.276	0.339
15	0.236	0.289	0.348
16	0.242	0.295	0.361
17	0.251	0.302	0.367
18	0.261	0.308	0.377
19	0.273	0.314	0.386
20	0.283	0.320	0.393
21	0.289	0.327	0.399
22	0.292	0.330	0.405
24	0.298	0.336	0.415
26	0.307	0.346	0.424
28	0.314	0.352	0.430
30	0.320	0.358	0.437
34	0.327	0.371	0.446
38	0.336	0.383	0.456
43	0.346	0.396	0.462
50	0.352	0.408	0.474
60	0.358	0.421	0.484
75	0.364	0.434	0.496
100	0.371	0.446	0.506
150	0.377	0.459	0.518
300	0.383	0.471	0.534
Rack	0.390	0.484	0.550

GENERAL NOTE: The strength factors above are used in formulas containing diametral pitch. These factors are 3.1416 times those used in formulas based on circular pitch.

Table 4-6.2-1 L_{10} Bearing Life

Service Class	L_{10} Bearing Life, hr
0	2,500
1	10,000
2	20,000
3	30,000
4	40,000

4-5.5 Bevel and Worm Gears

Bevel and worm gearing shall be rated by the gear manufacturer with service factors appropriate for the specified Service Class of the lifting device. When back-driving could be a problem, due consideration shall be given to selecting a worm gear ratio to establish lock-up.

4-5.6 Split Gears

Split gears shall not be used.

4-5.7 Lubrication

Means shall be provided to allow for the lubrication and inspection of gearing.

4-5.8 Operator Protection

Exposed gearing shall be guarded per para. 4-4.5 with access provisions for lubrication and inspection.

4-5.9 Reducers

Gear reducer cases shall

(a) be oil-tight and sealed with compound or gaskets
(b) have an accessible drain plug
(c) have a means for checking oil level

4-6 BEARINGS

4-6.1 Bearing Design

The type of bearings shall be specified by the lifting device manufacturer or qualified person.

4-6.2 L_{10} Bearing Life

L_{10} bearing life for rolling element bearings shall equal or exceed the values given in Table 4-6.2-1 for the lifting device Service Class.

4-6.3 Bearing Loadings

The basic rating life, L_{10}, for a radial bearing is given by eq. (4-2).

$$L_{10} = \left(\frac{16{,}667}{N}\right)\left(\frac{C_r}{P_r}\right)^H \tag{4-2}$$

The basic dynamic load rating C_r for a bearing with L_{10} bearing life from Table 4-6.2-1 is determined by eqs. (4-3) and (4-4).

$$C_r = \frac{P_r(L_{10}N)^{\frac{1}{H}}}{16{,}667^{\frac{1}{H}}} \tag{4-3}$$

$$P_r = XF_r + YF_a \geq F_r \tag{4-4}$$

where

C_r = basic dynamic load rating to theoretically endure one million revolutions, per bearing manufacturer, lb (N)
F_a = axial component of the actual bearing load, lb (N)
F_r = radial component of the actual bearing load, lb (N)
H = 3 for ball bearings, 10/3 for roller bearings
L_{10} = basic rating life exceeded by 90% of bearings tested, hr
N = rotational speed, rpm
P_r = dynamic equivalent radial load, lb (N)
X = dynamic radial load factor per bearing manufacturer
Y = dynamic axial load factor per bearing manufacturer

4-6.4 Sleeve and Journal Bearings

Sleeve or journal bearings shall not exceed pressure and velocity ratings as defined by eqs. (4-5) through (4-7). The manufacturers' values of P, V, and PV shall be used.

$$P = \frac{W}{dL} \tag{4-5}$$

$$V = \frac{\pi N d}{c} \tag{4-6}$$

$$PV = \frac{\pi W N}{Lc} \tag{4-7}$$

where

c = 12 when using U.S. Customary units
= 60 000 when using SI units

Copyrighted material licensed to Fermi National Laboratory by Clarivate Analytics (US) LLC, subscriptions.techstreet.com, downloaded on 2020-01-31 15:43:32 +0000 by Fermi National Laboratory User.
No further reproduction or distribution is permitted.

d = nominal shaft diameter or bearing inside diameter, in. (mm)
L = bearing length, in. (mm)
P = average pressure, psi (MPa)
V = surface velocity of shaft, ft/min (m/s)
W = bearing load, lb (N)

4-6.5 Lubrication

Means shall be provided to lubricate bearings. Bearing enclosures should be designed to exclude dirt and prevent leakage of oil or grease.

4-7 SHAFTING

4-7.1 Shaft Design

Shafting shall be fabricated of material having adequate strength and durability suitable for the application. The shaft diameter and method of support shall be specified by the lifting device manufacturer or qualified person and satisfy the conditions of paras. 4-7.2 through 4-7.7.

4-7.2 Shaft Alignment

Alignment of the shafting to gearboxes, couplings, bearings, and other drive components shall meet or exceed the component manufacturer's specifications.

4-7.3 Operator Protection

Exposed shafting shall be guarded per para. 4-4.5 with access provisions for lubrication and inspection.

4-7.4 Shaft Details

Shafting, keys, holes, press fits, and fillets shall be designed for the forces encountered in actual operation under the worst-case loading.

(17) 4-7.5 Shaft Static Stress

The nominal key size used to transmit torque through a shaft/bore interface shall be determined from Tables 4-7.5-1 and 4-7.5-2 based on the nominal shaft diameter.

Static stress on a shaft element shall not exceed the following values:

(a) axial or bending stress

$$S = S_a + S_b \leq 0.2S_u \tag{4-8}$$

where
S = computed combined axial/bending stress, ksi (MPa)
S_a = computed axial stress, ksi (MPa)
S_b = computed bending stress, ksi (MPa)
S_u = specified minimum tensile strength, ksi (MPa)

(b) shear stress

$$\tau = \tau_T + \tau_V \leq \frac{S_u}{5\sqrt{3}} = 0.1155S_u \tag{4-9}$$

where
τ = computed combined shear stress, ksi (MPa)
τ_T = computed torsional shear stress, ksi (MPa)
τ_V = computed transverse shear stress, ksi (MPa)

(c) Shaft elements subject to combined axial/bending and shear stresses shall be proportioned such that the combined stress does not exceed the following value:

$$S_c = \sqrt{S^2 + 3\tau^2} \leq 0.2S_u \tag{4-10}$$

where
S_c = computed combined stress, ksi (MPa)

4-7.6 Shaft Fatigue (17)

Shafting subjected to fluctuating stresses such as bending in rotation or torsion in reversing drives shall be checked for fatigue. This check is in addition to the static checks in para. 4-7.5 and need only be performed at points of geometric discontinuity where stress concentrations exist such as holes, fillets, keys, and press fits. Appropriate geometric stress concentration factors for the discontinuities shall be determined by the lifting device manufacturer or qualified person from a reference such as *Peterson's Stress Concentration Factors* by W. D. Pilkey and D. F. Pilkey.

4-7.6.1 Fatigue Stress Amplification Factor. The fatigue stress amplification factor, K_A, based on Service Class shall be selected from Table 4-7.6.1-1.

4-7.6.2 Endurance Limit. The corrected bending endurance limit, S_{ec}, for the shaft material is

$$S_{ec} = 0.5S_e = 0.25S_u \tag{4-11}$$

where
S_e = fatigue (endurance) limit of polished, unnotched specimen in reversed bending, ksi (MPa)
S_{ec} = corrected fatigue (endurance) limit of shaft in reversed bending, ksi (MPa)

4-7.6.3 Fatigue Stress. Fatigue stress on a shaft element shall not exceed the following values: (17)

(a) Direct axial and/or bending fatigue stress shall not exceed

$$S_f = (K_{TD})S_t + (K_{TB})S_b \leq \frac{S_{ec}}{K_A} \tag{4-12}$$

where
K_{TB} = stress amplification factor for bending
K_{TD} = stress amplification factor for direct tension

Copyrighted material licensed to Fermi National Laboratory by Clarivate Analytics (US) LLC, subscriptions.techstreet.com, downloaded on 2020-01-31 15:43:32 +0000 by Fermi National Laboratory User.
No further reproduction or distribution is permitted.

Table 4-7.5-1 Key Size Versus Shaft Diameter (ASME B17.1)

Nominal Shaft Diameter, in.		Nominal Key Size, in.
Over	To	
5/16	7/16	3/32
7/16	9/16	1/8
9/16	7/8	3/16
7/8	1 1/4	1/4
1 1/4	1 3/8	5/16
1 3/8	1 3/4	3/8
1 3/4	2 1/4	1/2
2 1/4	2 3/4	5/8
2 3/4	3 1/4	3/4
3 1/4	3 3/4	7/8
3 3/4	4 1/2	1
4 1/2	5 1/2	1 1/4
5 1/2	6 1/2	1 1/2

Table 4-7.5-2 Key Size Versus Shaft Diameter (DIN 6885-1)

Nominal Shaft Diameter, mm		Nominal Key Size, mm
Over	To	
6	8	2 × 2
8	10	3 × 3
10	12	4 × 4
12	17	5 × 5
17	22	6 × 6
22	30	8 × 7
30	38	10 × 8
38	44	12 × 8
44	50	14 × 9
50	58	16 × 10
58	65	18 × 11
65	75	20 × 12
75	85	22 × 14

Table 4-7.6.1-1 Fatigue Stress Amplification Factors

Service Class	Fatigue Stress Amplification Factor, K_A
0	1.015
1	1.030
2	1.060
3	1.125
4	1.250

S_f = computed fatigue stress, ksi (MPa)
S_t = computed axial tensile stress, ksi (MPa)

(b) Combined shear fatigue stress shall not exceed

$$\tau_f = (K_{ST})\tau \le \frac{S_{ec}}{K_A\sqrt{3}} \tag{4-13}$$

where
K_{ST} = stress amplification factor for torsional shear
τ_f = computed combined fatigue shear stress, ksi (MPa)

(c) Combined axial/bending and shear fatigue stresses where all are fluctuating shall not exceed

$$S_f = \sqrt{(K_{TD}S_t + K_{TB}S_b)^2 + 3(K_{ST}\tau)^2} \le \frac{S_{ec}}{K_A} \tag{4-14}$$

(d) Combined tensile and shear fatigue stresses where only part of the stresses are fluctuating shall not exceed

$$S_f = \sqrt{\left(S_{av}\frac{S_{ec}}{S_y} + K_T S_R\right)^2 + 3\left(\tau_{av}\frac{S_{ec}}{S_y} + K_{ST}\tau_R\right)^2} \le \frac{S_{ec}}{K_A} \tag{4-15}$$

where
K_T = larger of either K_{TD} or K_{TB}
S_{av} = portion of the computed tensile stress not due to fluctuating loads, ksi (MPa)
S_R = portion of the computed tensile stress due to fluctuating loads, ksi (MPa)
S_y = specified minimum yield stress, ksi (MPa)
τ_{av} = portion of the computed shear stress not due to fluctuating loads, ksi (MPa)
τ_R = portion of the computed shear stress due to fluctuating loads, ksi (MPa)

4-7.7 Shaft Displacement

Shafts shall be sized or supported so as to limit displacements under load when necessary for proper functioning of mechanisms or to prevent excessive wear of components.

4-8 FASTENERS

4-8.1 Fastener Markings

All bolts, nuts, and cap screws shall have required ASTM or SAE grade identification markings.

4-8.2 Fastener Selection

Fasteners for machine drives or other operational-critical components shall use ASTM A325, SAE Grade 5, ASTM A490, or SAE Grade 8 bolts, cap screws, or equivalents.

4-8.3 Fastener Stresses

Bolt stress shall not exceed the allowable stress values established by eqs. (3-40) through (3-43) and para. 3-4.5.

Copyrighted material licensed to Fermi National Laboratory by Clarivate Analytics (US) LLC, subscriptions.techstreet.com, downloaded on 2020-01-31 15:43:32 +0000 by Fermi National Laboratory User.
No further reproduction or distribution is permitted.

Fig. 4-9.2-1 Illustration of Holding and Support Forces (17)

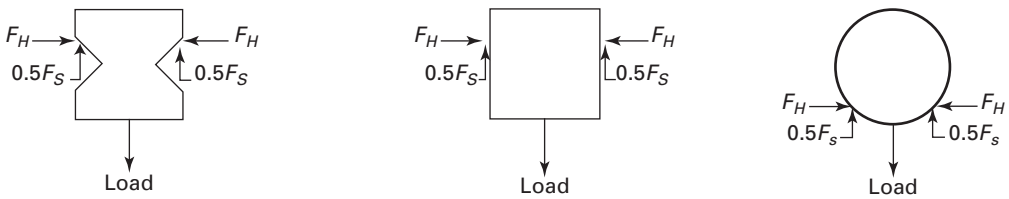

(a) Indentation Lifter (b) Pressure-Gripping Lifters

4-8.4 Fastener Integrity

Locknuts, double nuts, lock washers, chemical methods, or other means determined by the lifting device manufacturer or a qualified person shall be used to prevent the fastener from loosening due to vibration. Any loss of strength in the fastener caused by the locking method shall be accounted for in the design.

4-8.5 Fastener Installation

Fasteners shall be installed by an accepted method as determined by the lifting device manufacturer or a qualified person.

4-8.6 Noncritical Fasteners

Fasteners for covers, panels, brackets, or other noncritical components shall be selected by the lifting device manufacturer or a qualified person to meet the needs of the application.

4-9 GRIP SUPPORT FORCE

4-9.1 Purpose

This section sets forth requirements for the minimum support force for pressure-gripping (friction-type) and indentation-type lifters. Factors such as type and condition of gripping surfaces, environmental conditions, coefficients of friction, dynamic loads, and product temperature can affect the required support force and shall be considered during the design by a qualified person. In addition, lifters such as bar tongs and vertical axis coil grabs have other special load-handling conditions (e.g., opening force) that should be considered.

(17) 4-9.2 Pressure-Gripping and Indentation Lifter Support Force

The coefficient of friction, static or dynamic as applicable, shall be determined by a qualified person through testing or from published data. The illustrations in Fig. 4-9.2-1 demonstrate some ways friction forces may be applied.

$$F_S \geq 2.0 \times \text{Load} \tag{4-16}$$

where

F_H = minimum force on each side of load, lb (N)

F_S = total support force created by lifter, lb (N)

Load = weight of lifted load, lb (N)

4-10 VACUUM LIFTING DEVICE DESIGN

4-10.1 Vacuum Pad Capacity

(a) The ultimate pad capacity (UPC) shall be determined by eq. (4-17).

NOTE: Consistent units or unit conversions shall be used.

$$\text{UPC} = A\,V_p \tag{4-17}$$

where

A = effective area of the vacuum pad enclosed between the pad and the material when the pad is fully compressed against the material surface to be lifted

V_p = minimum vacuum specified at the pad

The value of V_p shall consider the altitude where the lifting device will be used.

(b) The UPC shall be reduced to a maximum vacuum pad rating (VPR).

$$\text{VPR} = \text{UPC}/N_v \tag{4-18}$$

where

$N_v = 2 + 2 \sin \theta$

θ = angle of vacuum pad interface surface measured from horizontal

The N_v value calculated in eq. (4-18) is for clean, flat, dry, nonporous surfaces and shall be increased as required due to the surface conditions of interfacing materials as determined by a qualified person. Consideration should be given to conditions such as surface temperatures, contamination, torsion and bending loads of the vacuum pad, and tested vacuum pad performance.

4-10.2 Vacuum Preservation

The vacuum lifter shall incorporate a method to prevent the vacuum level under the pad(s) from decreasing more than 25% (starting from rated vacuum level) in 5 min without primary power and the vacuum pad(s) attached to a clean, dry, and nonporous surface at the

Copyrighted material licensed to Fermi National Laboratory by Clarivate Analytics (US) LLC, subscriptions.techstreet.com, downloaded on 2020-01-31 15:43:32 +0000 by Fermi National Laboratory User.
No further reproduction or distribution is permitted.

rated load. Consideration should be given to conditions such as surface temperatures, contamination, torsion and bending loads of the vacuum pad, tested vacuum pad performance, and surface conditions of interfacing materials. Unintended loss of power shall not disconnect the pad(s) from the vacuum preservation method.

4-10.3 Vacuum Indicator

A vacuum indicator shall be visible to the lifter operator during use and shall continue to function during an unintended loss of power. It shall indicate the presence of the minimum vacuum required for the rated load of the vacuum lifting device.

(17) **4-10.4 Unintended Operation**

A qualified person shall choose the location and guarding of operating devices that are used to release a load from a lifter in order to inhibit unintentional operation of the lifter.

4-11 FLUID POWER SYSTEMS

4-11.1 Purpose

This section identifies requirements of fluid power systems and components for below-the-hook lifting devices.

4-11.2 Fluid Power Components

(a) The lifting device manufacturer or qualified person shall specify system components such as cylinders, pumps, valves, pipes, hoses, and tubes. Fluid power systems should be designed so that loss of the lifter power source(s), fluid loss, or control system failure will not result in uncontrolled movement of the load.

(b) Each hydraulic fluid power component shall be selected based on the manufacturer's rating and the maximum pressure applied to that component of the system, provided that the rating is based on a design factor equal to or greater than $1.67N_d$.

(c) Each pneumatic fluid power component shall be selected based on the maximum pressure applied to that component of the system and a rating equal to the manufacturer's rating divided by $0.50N_d$. Alternatively, pneumatic fluid power components may be selected in accordance with para. (b) above.

(d) Components whose failure will not result in uncontrolled movement of the load may be selected based on the manufacturer's rating.

4-11.3 Power Source/Supply

Where the lifter uses an external fluid power source that is not part of the below-the-hook lifter, the supply requirements, which shall include the maximum sum of all fluid power components possible to actuate at one time, shall be detailed in the specifications.

4-11.4 Fluid Pressure Indication

If a change in fluid pressure could result in uncontrolled movement of the load, an indicator should be provided to allow the lifter operator to verify that the fluid pressure is sufficient during all stages of lifter use. Additional indicators may be necessary to allow monitoring of various systems. The fluid pressure indicator(s), if provided, shall be clearly visible or audible.

4-11.5 Fluid Pressure Control

The fluid power system shall be equipped with a means to release stored energy and to verify that the system is at a zero-energy state. Hydraulic fluid shall not be discharged to atmosphere.

The system shall be designed to protect against pressures exceeding the rating of the system or any component.

4-11.6 System Guarding

Fluid power tubing, piping, components, and indicators should be located or guarded to resist damage resulting from collision with other objects and whipping in the event of failure.

PARAGRAPH 4-12 DELETED (17)

Copyrighted material licensed to Fermi National Laboratory by Clarivate Analytics (US) LLC, subscriptions.techstreet.com, downloaded on 2020-01-31 15:43:32 +0000 by Fermi National Laboratory User.
No further reproduction or distribution is permitted.

Chapter 5
Electrical Components

5-1 GENERAL

5-1.1 Purpose

This chapter sets forth selection criteria for electrical components of a below-the-hook lifting device.

5-1.2 Relation to Other Standards

Components of electrical equipment used to operate a below-the-hook lifting device shall conform to the applicable sections of ANSI/NFPA 70, National Electrical Code.

5-1.3 Power Requirements

The electrical power supply and control power requirements for operating a lifting device shall be detailed in the specifications. The supply requirements shall include the maximum full-load amperage draw based on the operating conditions that will create the largest demand on the system.

5-2 ELECTRIC MOTORS AND BRAKES

(17) **5-2.1 Motors**

Continuous-duty motors shall be used when motor function is required to lift or hold the load. Motors used for other functions may be intermittent duty, provided they can meet the required duty cycle of the lifter without overheating. Motors shall have torque characteristics suitable for the lifting device application and be capable of operating at the specified speed, load, and number of starts.

5-2.2 Motor Sizing

Motors shall be sized so the rated motor torque is not exceeded within the specified working range and/or rated load of the lifting device.

5-2.3 Temperature Rise

Temperature rise in motors shall be in accordance with NEMA MG 1 for the class of insulation and enclosure used. Unless otherwise specified, the lifting device manufacturer shall assume 104°F (40°C) ambient temperature.

5-2.4 Insulation

The minimum insulation rating of motors and brakes shall be Class B.

5-2.5 Brakes

Electric brakes shall be furnished whenever the lifted load could cause the gearing to back drive and allow unintended movement of the load. Brakes shall be electric release spring-set type. Brake torque shall hold a minimum of 150% rated motor torque or 150% of back-driving torque, whichever is greater.

5-2.6 Voltage Rating

Motor and brake nameplate voltage shall be in accordance with NEMA MG 1 for the specified power supply. The installer/user shall ensure the voltage delivered to the terminals of the lifting device is within the tolerance set by NEMA.

5-3 OPERATOR INTERFACE

5-3.1 Locating the Operator Interface

A qualified person shall choose a location for the operator interface in order to produce a safe and functional electrically powered lifting device. The lifting device specifications shall state the location of the operator interface chosen by a qualified person from the following options:

(a) push buttons or lever attached to the lifter

(b) pendant station push buttons attached to the lifter

(c) pendant station push buttons attached to the hoist or crane

(d) push buttons or master switches located in the crane cab

(e) handheld radio control or infrared transmitter

(f) automated control system

5-3.2 Unintended Operation

A qualified person shall choose the location and guarding of push buttons, master switches, or other operating devices that are used to open, drop, or release a load from a lifter. In order to inhibit unintentional operation of the lifter, one of the following options should be considered:

(a) Use two push buttons in series spaced such that they require two-handed operation to open, drop, or release a load from a lifter.

(b) Use one or more limit switches and/or sensors to confirm a load is lifted or suspended, in series with the open, drop, or release push button, to inhibit open, drop, or release motion while the load is lifted.

Copyrighted material licensed to Fermi National Laboratory by Clarivate Analytics (US) LLC, subscriptions.techstreet.com, downloaded on 2020-01-31 15:43:32 +0000 by Fermi National Laboratory User.
No further reproduction or distribution is permitted.

(c) Use a mechanical guard or cover over the actuation device that requires two specific operations to activate the device.

5-3.3 Operating Levers

Cab-operated master switches shall be spring return to neutral (off) position type, except that those for electromagnet or vacuum control shall be maintained type.

5-3.4 Control Circuits

Control circuit voltage of any lifter shall not exceed 150 volts AC or 300 volts DC.

5-3.5 Push Button Type

Push buttons and control levers shall return to the "off" position when pressure is released by the operator, except for electromagnet or vacuum control, which should be maintained type.

5-3.6 Push Button Markings

Each push button, control lever, and master switch shall be clearly marked with appropriate legend plates describing the resulting motion or function of the lifter.

5-3.7 Sensor Protection

Limit switches, sensors, and other control devices, if used, shall be located, guarded, and protected to inhibit inadvertent operation and damage resulting from collision with other objects.

5-3.8 Indicators

Indication or signal lights should be provided to indicate if power is "on" or "off." If provided, the lights shall be located so that they are visible to the lifter operator. Multiple bulbs may be provided to avoid confusion due to a burned-out bulb.

5-4 CONTROLLERS AND AUXILIARY EQUIPMENT

5-4.1 Control Considerations

This section covers requirements for selecting and controlling the direction, speed, acceleration, and stopping of lifting device motors. Other control requirements such as limit switches, master switches, and push buttons are covered in section 5-3.

5-4.2 Control Location

Controls mounted on the lifting device shall be located, guarded, and designed for the environment and impacts expected.

5-4.3 Control Selection

A qualified person designated by the manufacturer and/or owner, purchaser, or user of a motor-driven device shall determine the type and size of control to be used with the lifter for proper and safe operation. Control systems may be manual, magnetic, static, inverter (variable frequency), electric/electronic, or in combination.

5-4.4 Magnetic Control Contactors

Control systems using magnetic contactors shall have sufficient size and quantity for starting, accelerating, reversing, and stopping the lifter. Contactors rated by NEMA shall be sized in accordance with NEMA ICS 2. Definite-purpose contactors specifically rated for crane and hoist duty service or IEC contactors may be used for Service Classes 0, 1, and 2, provided the application does not exceed the contactor manufacturer's published rating. Reversing contactors shall be interlocked.

5-4.5 Static and Inverter Controls

Control systems using static or inverter assemblies shall be sized with due consideration of motor, rating, drive requirements, service class, duty cycle, and application in the control. If magnetic contactors are included within the static assembly, they shall be rated in accordance with para. 5-4.4.

5-4.6 Lifting Magnet Controllers (17)

(a) Provisions shall be made for maintaining the control switch in position per para. 5-3.2 to protect it from unintended operation.

(b) Loss of the crane or magnet control signal shall not result in de-energizing the lifting magnet.

(c) All lifting magnet controllers should have voltage and amperage indicators.

5-4.7 Rectifiers

Direct-current-powered lifters may incorporate a single-phase full wave bridge rectifier for diode logic circuitry to reduce the number of conductors required between the lifter and the control. The rectifier shall be selenium or silicon type, sized to withstand the stalled current of the motor. Silicon-type rectifiers shall employ transient suppressors to protect the rectifier from voltage spikes.

5-4.8 Electrical Enclosures

Control panels shall be enclosed and shall be suitable for the environment and type of controls. Enclosure types shall be in accordance with NEMA ICS 6 classifications.

5-4.9 Branch Circuit Overcurrent Protection

Control systems for motor-powered lifters shall include branch circuit overcurrent protection as specified in ANSI/NFPA 70. These devices may be part of the hoisting equipment from which the lifter is suspended, or may be incorporated as part of the lifting device.

Copyrighted material licensed to Fermi National Laboratory by Clarivate Analytics (US) LLC, subscriptions.techstreet.com, downloaded on 2020-01-31 15:43:32 +0000 by Fermi National Laboratory User.
No further reproduction or distribution is permitted.

5-4.10 System Guarding

Electrical components shall be guarded or located so that persons or objects cannot inadvertently come into contact with energized components under normal operating conditions.

(17) 5-5 GROUNDING

5-5.1 General

Electrically operated lifting devices shall be grounded in accordance with ANSI/NFPA 70.

5-5.2 Grounding Method

Special design considerations shall be taken for lifters with electronic equipment. Special wiring, shielding, filters, and grounding may need to be considered to account for the effects of electromagnetic interference (EMI), radio frequency interference (RFI), and other forms of emissions.

(17) 5-6 POWER DISCONNECTS

5-6.1 Disconnect for Powered Lifter

Control systems for motor-powered lifters shall include a power disconnect switch as specified in ANSI/NFPA 70. This device may be part of the hoisting equipment from which the lifter is suspended, or may be incorporated as part of the lifting device.

5-6.2 Disconnect for Vacuum Lifter

(a) Hoisting equipment using an externally powered vacuum lifter shall have a separate vacuum lifter circuit switch of the enclosed type and shall be capable of being locked in the open (off) position. The provision for locking or adding a lock to the disconnecting means shall be installed on or at the switch or circuit breaker used as the disconnecting means and shall remain in place with or without the lock installed. Portable means for adding a lock to the switch or circuit breaker shall not be permitted.

(b) The vacuum lifter disconnect switch, when required by ANSI/NFPA 70, shall be connected on the line side (power supply side) of the hoisting equipment disconnect switch.

(c) Disconnects are not required on externally powered vacuum lifters operating from a 120 V AC single-phase power source.

5-6.3 Disconnect for Magnet

(a) Hoisting equipment with an externally powered electromagnet shall have a separate magnet circuit switch of the enclosed type and shall be capable of being locked in the open (off) position. The provision for locking or adding a lock to the disconnecting means shall be installed on or at the switch or circuit breaker used as the disconnecting means and shall remain in place with or without the lock installed. Portable means for adding a lock to the switch or circuit breaker shall not be permitted. Means for discharging the inductive energy of the magnet shall be provided.

(b) The magnet lifter disconnect switch, when required by ANSI/NFPA 70, shall be connected on the line side (power supply side) of the hoisting equipment disconnect switch. Power supplied to lifting magnets from DC generators can be disconnected by disabling the external power source connected to the generator, or by providing a circuit switch that disconnects excitation power to the generator and removes all power to the lifting magnet.

(c) Disconnects are not required on externally powered electromagnets operating from a 120 V AC single-phase power source.

5-7 BATTERIES

5-7.1 Battery Condition Indicator

Battery-operated lifters or lifting magnets shall contain a device indicating existing battery conditions.

5-7.2 Enclosures

Battery enclosures or housings for wet cell batteries shall be vented to prevent accumulation of gases.

5-7.3 Battery Alarm

Battery backup systems shall have an audible or visible signal to warn the lifter operator when the primary power is being supplied by the backup battery(ies).

Copyrighted material licensed to Fermi National Laboratory by Clarivate Analytics (US) LLC, subscriptions.techstreet.com, downloaded on 2020-01-31 15:43:32 +0000 by Fermi National Laboratory User.
No further reproduction or distribution is permitted.

(17)

Chapter 6
Lifting Magnet Design

6-1 PURPOSE

This chapter sets forth requirements for the performance characteristics of material handling magnets. Refer to Chapters 3, 4, and 5 for structural, mechanical, and electrical design requirements, respectively.

NOTE: Calculations for magnet design are commonly performed in SI units (m, kg, s). Therefore, the equations in this chapter are presented in SI units.

6-2 DESIGN REQUIREMENTS

6-2.1 General

The design of a material handling magnet shall take into consideration the magnetic induction capabilities of the magnet components as well as the application for which the magnet is designed.

The magnet shall be designed with the capability to generate a lifting force that meets or exceeds the safety requirements stated in ASME B30.20 for a given application.

(a) Lifting magnets shall be designed to a minimum of Design Category B (static strength criteria) and the proper Service Class (fatigue life criteria) selected for the number of load cycles.

(b) Lifting magnet suspension devices should meet the lifting magnet manufacturer's recommendations. If any such suspension devices are used during breakaway testing and are not rated for the maximum breakaway force of the lifting magnet, they shall be removable for the purpose of load testing as required by ASME B30.20.

6-2.2 Application and Environmental Profile

When selecting a magnet suitable for a particular application, the magnet designer shall consider as a minimum the following items:

(a) rated load
(b) load size, shape, and thickness
(c) load temperature
(d) load type [bundles, single/multiple plate, structural shapes, coil (eye vertical/horizontal), tube/pipe, layers, slab, billet, rebar, munitions, scrap, etc.]
(e) expected air gap
(f) magnet duty cycle where applicable
(g) load material composition
(h) operating environment (indoor/outdoor, severity of environmental exposure, ambient temperature range, any situations existing that may affect the design or operation of the magnet such as radiation, EMI, and the presence of caustic fumes and chemicals)

6-3 SELECTION AND DESIGN

6-3.1 Components

At a minimum, a lifting magnet shall consist of the following components:

(a) effective magnet contact area
(b) flux source
(c) flux path
(d) release mechanism

6-3.2 Magnetic Circuit

The selection of components should be considered with respect to their effect on the magnetic circuit in both the "attach" condition and the "release" condition.

The magnetic circuit consists of three components: the flux source, the flux path, and the effective magnet contact area. In the "attach" condition, the flux path will include the load.

When analyzing the magnetic circuit using the techniques below, it should be noted that frequently a lifting magnet consists of several magnetic circuits.

6-3.3 Effective Magnet Contact Area

The effective magnet contact area combined with the magnetic induction capabilities shall generate enough force to achieve the required design factor with respect to the rated load.

The required area can be determined using eq. (6-1).

$$A_m = \frac{F}{CB_m^2} \tag{6-1}$$

where

A_m = effective magnet contact area, m^2
B_m = flux density, T
C = 400 000 A/T-m
F = resultant force, N

The effective magnet contact area should consist of a balanced amount of north pole area and south pole area.

The number of poles and the size, shape, and layout of the poles should take into account the load characteristics and the items described in para. 6-2.2.

The designer shall determine the appropriate flux density, B_m, for the application in order to determine

Copyrighted material licensed to Fermi National Laboratory by Clarivate Analytics (US) LLC, subscriptions.techstreet.com, downloaded on 2020-01-31 15:43:32 +0000 by Fermi National Laboratory User.
No further reproduction or distribution is permitted.

the required effective magnet contact area, A_m. By combining these two components, the total flux, ϕ_m, required for the application can be determined using eq. (6-2).

$$\phi_m = B_m A_m \tag{6-2}$$

where
ϕ_m = total flux required for the application, Wb

6-3.4 Flux Source

6-3.4.1 General. The total amount of flux provided by the flux source shall be no less than the value determined in eq. (6-2). Equations (6-5) and (6-6) give the total flux provided by an electromagnet flux source and a permanent magnet flux source, respectively.

The source of the flux (permanent magnet or electromagnet) shall have a magnetomotive force, F_m, that is sufficient to generate enough force at the effective magnet contact area to achieve the required design factor with respect to the rated load.

The magnetomotive force can be computed using eq. (6-3) for an electromagnet or eq. (6-4) for a permanent magnet.

$$F_m = NI \tag{6-3}$$

$$F_m = H_c L \tag{6-4}$$

where
F_m = magnetomotive force of magnetic circuit, A
H_c = coercivity of the permanent magnet material, A/m
I = current in the coil wire, A
L = magnetic length, m
N = number of turns in the coil

6-3.4.2 Electromagnet Flux Source. An electromagnet uses a constantly energized power coil as the flux source. The electromagnet core of the power coil should be a material with permeability approaching that of pure iron, and should have a cross-sectional area that is sufficient to provide the total flux, ϕ_m, required by eq. (6-2).

The power coil shall be of a nonmagnetic metal that is a good electrical conductor such as copper or aluminum. The conductor shall be electrically insulated and the insulation shall tolerate the intended operating temperature of the lifting magnet. The design of the coil(s) of an electromagnet shall generate and maintain a magnetic field strength, H, sufficient to provide the total flux required by the application.

To determine the flux density, B_m, of the electromagnet core, refer to the magnetization curve of the material and determine the flux density value that corresponds to the magnetic field strength, H, exerted by the power coil. The total flux provided by the electromagnet flux source can be computed using eq. (6-5).

$$\phi_e = B_e A_e \tag{6-5}$$

where
A_e = cross-sectional area of electromagnet core, m^2
B_e = flux density of electromagnet core, T
ϕ_e = flux from electromagnet flux source, Wb

6-3.4.3 Permanent Magnet Flux Source

6-3.4.3.1 General. A permanent lifting magnet uses permanent magnet(s) as the flux source. There are two types of permanent lifting magnets: manually controlled and electrically controlled (electro-permanent).

6-3.4.3.2 Manually Controlled Permanent Magnet. A manually controlled permanent lifting magnet uses permanent magnet material as the flux source (e.g., NdFeB). The orientation and position of the permanent magnet material inside of the lifting magnet determine the state (i.e., "attach" or "release") of the lifting magnet and are controlled using mechanical means.

6-3.4.3.3 Electrically Controlled Permanent Magnet. An electrically controlled permanent lifting magnet uses permanent magnet material as the flux source (e.g., AlNiCo). The permanent magnet material is surrounded by a power coil, and the power coil is used to manipulate the magnetic characteristics of the electro-permanent magnet core. In many cases, a second permanent magnet material (e.g., NdFeB) is used in combination with the first. In this case, the total flux provided by the flux source will be the sum of the flux from the two permanent magnet materials.

The power coil(s) of an electrically controlled permanent magnet should surround the electro-permanent magnet core(s). It shall be of a nonmagnetic material that is a good electrical conductor such as copper or aluminum. The conductor shall be electrically insulated and the insulation shall tolerate the intended operating temperature of the lifting magnet. The power coil shall generate a magnetic field, H, that is sufficient to bring the electro-permanent magnet core to saturation.

6-3.4.3.4 Permanent Magnet Flux. The total flux provided by a permanent magnet flux source can be computed using eq. (6-6).

$$\phi_p = B_r A_p \tag{6-6}$$

where
A_p = polar surface area of permanent magnet, m^2
B_r = residual magnetic induction of permanent magnet, T
ϕ_p = flux from permanent magnet flux source, Wb

6-3.4.3.5 Permanent Magnet Material. Permanent magnet material shall be capable of providing and maintaining the required magnetomotive force through the entire load and magnet operating temperature spectra.

The characteristics of the magnet materials shall be considered during design. Attention should be paid to

Copyrighted material licensed to Fermi National Laboratory by Clarivate Analytics (US) LLC, subscriptions.techstreet.com, downloaded on 2020-01-31 15:43:32 +0000 by Fermi National Laboratory User.
No further reproduction or distribution is permitted.

the thermal characteristics as well as the magnetic characteristics, including the following:

(a) residual induction, B_r (magnetic induction remaining in a saturated magnetic material after the magnetizing field has been reduced to zero)

(b) coercive force, H_c (demagnetizing force required to reduce the residual induction, B_r, to zero)

(c) intrinsic coercive force, H_{ci} (ability of magnet material to resist demagnetization)

(d) maximum energy product, $BH_{\max}$ (external energy produced by magnet)

This information should be obtained from the hysteresis curve of the particular material.

Permanent magnet materials shall not be employed as a structural component in any device.

6-3.5 Flux Path

The flux path shall be designed such that the permeability, length, and cross-sectional area provide sufficient flux to meet the requirements of the application. In selecting a material for the flux path, the magnet designer shall evaluate material characteristics and select the materials possessing the appropriate characteristics. These include, but are not limited to, magnetic permeability, yield stress and tensile strength, and retention of physical properties at intended operating temperatures.

Magnetic characteristics should be obtained from the magnetic hysteresis curves of materials being considered.

The reluctance can be related to the permeability of the material by eq. (6-7).

$$R = \frac{l}{\mu A} \tag{6-7}$$

where

A = cross-sectional area of the magnetic circuit or segment of the circuit, m^2

l = length of the magnetic circuit or segment of the circuit, m

R = reluctance of the magnetic circuit, A/Wb

μ = permeability of the material, H/m

When analyzing the flux path in its entirety, it should be broken into sections of constant permeability and cross-sectional area, where the total reluctance of the magnetic circuit is the sum of the individual sections as shown in eq. (6-8).

NOTE: One section of the circuit will include the load in the "attach" condition.

$$R_{\text{tot}} = R_1 + R_2 + \ldots + R_n \tag{6-8}$$

where

R_n = reluctance of an individual section of the magnetic circuit, A/Wb

R_{tot} = total reluctance of the magnetic circuit, A/Wb

The reluctance of all sections of the flux path shall be such that it allows for the total flux required for the application to travel from the flux source to the effective magnet contact area. Use eq. (6-9) to determine the total flux available to the magnetic circuit. The total flux available to the magnetic circuit must be greater than or equal to the total flux required for the application.

$$\phi_c = \frac{F_m}{R_{\text{tot}}} \tag{6-9}$$

where

ϕ_c = flux available to the magnetic circuit, Wb

6-3.6 Release Mechanism

A means of attaching and releasing a lifting magnet from a load shall be provided. The control handle of a manually controlled permanent magnet shall include a device that will hold the handle in both the "attach" and "release" positions to prevent inadvertent changes.

6-3.7 Encapsulation Compound

The encapsulation compound shall protect the coils and permanent magnet material from the effects of mechanical shock, moisture, and internally and externally generated heat that may arise through normal operation of the material handling magnet. Consideration should be given to characteristics such as temperature rating, thermal conductivity and expansion, thermal shock, dielectric constant, dielectric strength, volume resistivity, viscosity, and hardness.

6-3.8 Multiple Magnet Systems

Select the appropriate number of magnets required to lift the load and maintain the desired load orientation and support. This evaluation is based on load deflection characteristics, load type, rated load of each magnet, magnet spacing, and real air gap.

6-3.9 Environmental Considerations

In cases where the load and magnet operating temperatures are extreme, a means of monitoring the magnet temperature should be provided within the magnet control in order to inform the lifter operator of an overheating condition that may result in reduced lifting force.

In cases where the load and magnet are subject to varying levels of moisture, additional precautions shall be made to protect against electrical grounding.

Copyrighted material licensed to Fermi National Laboratory by Clarivate Analytics (US) LLC, subscriptions.techstreet.com, downloaded on 2020-01-31 15:43:32 +0000 by Fermi National Laboratory User.
No further reproduction or distribution is permitted.

NONMANDATORY APPENDIX A COMMENTARY FOR CHAPTER 1: SCOPE, DEFINITIONS, AND REFERENCES[1]

A-1 PURPOSE

This Standard has been developed in response to the need to provide clarification of the intent of ASME B30.20 with respect to the structural design of below-the-hook lifting devices. Since the first edition of ASME B30.20 in 1986, users have requested interpretations of the construction (structural design) requirements stated therein. The level of detail required to provide adequate answers to the questions submitted extends beyond that which can be covered by interpretations of a B30 safety standard.

A-2 SCOPE

ASME BTH-1 addresses only design requirements. As such, this Standard should be used in conjunction with ASME B30.20, which addresses safety requirements. ASME BTH-1 does not replace ASME B30.20. The design criteria set forth are minimum requirements that may be increased at the discretion of the lifting device manufacturer or a qualified person.

The design of lifting attachments may be addressed by existing industry design standards. In the absence of such design standards, a qualified person should determine if the provisions of ASME BTH-1 are applicable.

A-3 NEW AND EXISTING DEVICES

It is not the intent of this Standard to require retrofitting of existing lifting devices.

A-4 GENERAL REQUIREMENTS

A-4.1 Design Responsibility

Although always implied, this provision now explicitly states that the design of below-the-hook lifting devices is the responsibility of a qualified person. This requirement has been established in recognition of the impact that the performance of a lifting device has on workplace safety, the complexity of the design process, and the level of knowledge and training required to competently design lifting devices.

A-4.2 Units of Measure (17)

The requirements of this Standard are presented wherever possible in a manner that is dimensionally independent, thus allowing application of these requirements using either U.S. Customary units or the International System of Units (SI). U.S. Customary units are the primary units used in this Standard, except in Chapter 6.

A-4.3 Design Criteria

The original ASME B30.20 structural design requirements defined a lifting device only in terms of its rated load. Later editions established fatigue life requirements by reference to AWS D14.1/D14.1M. ASME BTH-1 now defines the design requirements of a lifter in terms of the rated load, Design Category, and Service Class to better match the design of the lifter to its intended service. An extended discussion of the basis of the Design Categories and Service Classes can be found in Nonmandatory Appendices B and C (commentaries for Chapters 2 and 3, respectively).

A-4.4 Analysis Methods

The allowable stresses defined in Chapters 3 and 4 have been developed based on the presumption that the actual stresses due to design loads will be computed using classical methods. Such methods effectively compute average stresses acting on a structural or mechanical element.

Consideration of the effects of stress concentrations is not normally required when determining the static strength of a lifter component (see Nonmandatory Appendix C, para. C-5.2). However, the effects of stress concentrations are most important when determining fatigue life. Lifting devices often are constructed with discontinuities or geometric stress concentrations such as pin and bolt holes, notches, inside corners, and shaft keyways that act as initiation sites for fatigue cracks.

Analysis of a lifting device with discontinuities using linear finite element analysis will typically show peak stresses that indicate failure, where *failure* is defined as the point at which the applied load reaches the loss of function (or limit state) of the part or device under consideration. This is particularly true when evaluating static strength. While the use of such methods is not prohibited, modeling of the device and interpretation of the results demand suitable expertise to ensure the

[1] This Appendix contains commentary that may assist in the use and understanding of Chapter 1. Paragraphs in this Appendix correspond with paragraphs in Chapter 1.

Copyrighted material licensed to Fermi National Laboratory by Clarivate Analytics (US) LLC, subscriptions.techstreet.com, downloaded on 2020-01-31 15:43:32 +0000 by Fermi National Laboratory User.
No further reproduction or distribution is permitted.

requirements of this Standard are met without creating unnecessarily conservative limits for static strength and fatigue life.

A-4.5 Material

The design provisions in Chapters 3 and 4 are based on practices and research for design using carbon, high-strength low-alloy, and heat-treated constructional alloy steels. Some of the equations presented are empirical and may not be directly applicable to use with other materials. Both ferrous and nonferrous materials, including the constructional steels, may be used in the mechanical components described in Chapter 4.

Industry-wide specifications are those from organizations such as ASTM International, American Iron and Steel Institute (AISI), and SAE International. A proprietary specification is one developed by an individual manufacturer.

A-4.6 Welding

AWS D14.1/D14.1M is cited as the basis for weld design and welding procedures. This requirement is in agreement with CMAA Specification No. 70 and those established by ASME B30.20. Because of the requirement for nondestructive examination of Class 1 and Class 2 weld joints, AWS D14.1/D14.1M was selected over the more commonly known AWS D1.1 (refer to AWS D14.1/D14.1M, section 10.8). Fabricators that use personnel and procedures that are qualified under earlier editions of AWS D14.1/D14.1M, AWS D1.1, or Section IX of the ASME Boiler and Pressure Vessel Code are qualified to perform duties under AWS D14.1/D14.1M, provided that they meet any additional requirements that are mandated by AWS D14.1/D14.1M (refer to AWS D14.1/D14.1M, para. 9.1.4). The allowable stresses for welds are modified in this Standard to provide the higher design factors deemed necessary for lifting devices.

(17) A-4.7 Temperature

The temperature limits stated are based on the following. Historically, tension brittle failures have occurred during hydrotest in pressure vessels fabricated from low carbon steel at temperatures as high as 50°F (10°C). Flaws in steel plate material were the primary cause of these failures. With tighter production processes, closer metallurgical control, and better quality checks in current practice, the risk of such failure is reduced. Thus, the Committee selected the 25°F (−4°C) temperature as a reasonable lower limit. This lower temperature limit is also consistent with recommendations made by AISC (2006).

The Committee selected the upper temperature limit as a reasonable maximum temperature of operation in a summer desert environment. Data from the ASME Boiler and Pressure Vessel Code material design tables indicate that some carbon steels have already begun to decline in both yield stress and allowable tension stress at 200°F (93°C). Some materials decline by as much as 4.6%, but most decline less. A straight-line interpolation between the tabulated values for materials at 100°F (38°C) and 200°F (93°C) in this reference gives acceptable stress values that have minimal degradation at 150°F (66°C).

In some industrial uses, lifting devices can be subjected to temperatures in excess of 1,000°F (540°C). At these temperatures, the mechanical properties of most materials are greatly reduced over those at ambient. If the exposure is prolonged and cyclic in nature, the creep rupture strength of the material, which is lower than the simple elevated temperature value, must be used in determining the design rated load and life of the device.

Of importance when evaluating the effects of temperature is the temperature of the lifter component rather than the ambient temperature. A lifter may move briefly through an area of frigid air without the temperature of the steel dropping to the point of concern. Likewise, a lifter that handles very hot items may have some components that become heated due to contact.

A-5 DEFINITIONS

This section presents a list of definitions applicable to the design of below-the-hook lifting devices. Definitions from the ASME Safety Codes and Standards Lexicon and other engineering references are used wherever possible. The defined terms are divided into general terms (para. 1-5.1) that are considered broadly applicable to the subject matter and groups of terms that are specific to each chapter of the Standard.

A-6 SYMBOLS

The symbols used in this Standard are generally in conformance with the notation used in other design standards that are in wide use in the United States, such as the AISC specification (AISC, 1989) and the crane design specifications published by AIST and CMAA (AIST Technical Report No. 6 and CMAA Specification No. 70, respectively). Where notation did not exist, unique symbols are defined herein and have been selected to be clear in meaning to the user.

A-7 REFERENCES (17)

ASME BTH-1 is structured to be a stand-alone standard to the greatest extent practical. However, some areas are best suited to be covered by reference to established industry standards. Section 1-7 lists codes, standards, and other documents that are cited within the main body of this Standard and provides the names and addresses of the publishers of those documents.

Each chapter of this Standard has a related Nonmandatory Appendix that explains, where necessary, the basis of the provisions of that chapter. All publications cited in these Nonmandatory Appendices are

Copyrighted material licensed to Fermi National Laboratory by Clarivate Analytics (US) LLC, subscriptions.techstreet.com, downloaded on 2020-01-31 15:43:32 +0000 by Fermi National Laboratory User.
No further reproduction or distribution is permitted.

listed below. These references are cited for information only.

29 CFR 1910.179, Overhead and Gantry Cranes

U.S. Department of Defense, 1998, DOD Handbook MILHDBK-1038, Weight Handling Equipment

Publisher: Superintendent of Documents, U.S. Government Publishing Office (GPO), 732 N. Capitol Street, NW Washington, DC 20401 (www.gpo.gov)

ANSI B15.1-2008 (Reaffirmation of ASME B15.1-2000), Safety Standards for Mechanical Power Transmission Apparatus (Withdrawn)

Publisher: Association for Manufacturing Technology (AMT), 7901 Westpark Drive, McLean, VA 22102-4206 (www.amtonline.org)

ANSI/ABMA 9-1990 (R2000), Load Rating and Fatigue Life for Ball Bearings[2]

ANSI/ABMA 11-1990 (R1999), Load Rating and Fatigue Life for Roller Bearings[2]

Publisher: American Bearing Manufacturers Association (ABMA), 2025 M Street, NW, Suite 800, Washington, DC 20036 (www.americanbearings.org)

ANSI/AGMA 2001-D04 (reaffirmed January 2010), Fundamental Rating Factors and Calculation Methods for Involute Spur and Helical Gear Teeth[2]

Publisher: American Gear Manufacturers Association (AGMA), 1001 North Fairfax Street, Suite 500, Alexandria, VA 22314 (www.agma.org)

ANSI/AWS D14.1/D14.1M-2005, Specification for Welding of Industrial and Mill Cranes and Other Material Handling Equipment[2]

AWS D1.1-2015, Structural Welding Code — Steel

Publisher: American Welding Society (AWS), 8669 NW 36 Street, No. 130, Miami, FL 33166 (www.aws.org)

ANSI/NFPA 70-2014, National Electrical Code[2]

ANSI/NFPA 79-2015, Electrical Standard for Industrial Machinery[2]

Publisher: National Fire Protection Association (NFPA), 1 Batterymarch Park, Quincy, MA 02169 (www.nfpa.org)

API RP 2A-WSD, 2000, Planning, Designing, and Constructing Fixed Offshore Platforms — Working Stress Design

Publisher: American Petroleum Institute (API), 1220 L Street, NW, Washington, DC 20005 (www.api.org)

ASME B17.1-1967 (R2013), Keys and Keyseats

ASME B30.2-2011, Overhead and Gantry Cranes (Top Running Bridge, Single or Multiple Girder, Top Running Trolley Hoist)

ASME B30.20-2003, Below-the-Hook Lifting Devices

ASME Boiler and Pressure Vessel Code, Section II, Part D, Properties, 2001 Edition, 2002 Addenda

ASME Boiler and Pressure Vessel Code, Section IX, Welding and Brazing Qualifications, 2001 Edition, 2002 Addenda

ASME HST-4–1999, Performance Standard for Overhead Electric Wire Rope Hoists

Bibber, L. C., Hodge, J. M., Altman, R. C., and Doty, W. D., 1952, "A New High-Yield-Strength Alloy Steel for Welded Structures," *Transactions,* Vol. 74, Part 3

Publisher: The American Society of Mechanical Engineers (ASME), Two Park Avenue, New York, NY 10016-5990 (www.asme.org)

Avallone, E. A., and Baumeister, T., eds., 1987, *Marks' Standard Handbook for Mechanical Engineers,* 9th edition

Melcon, M. A., and Hoblit, F. M., 1953, "Developments in the Analysis of Lugs and Shear Pins," *Product Engineering,* Vol. 24, No. 6, pp. 160–170

Shigley, J. E., and Mischke, C. R., 2001, *Mechanical Engineering Design,* 6th edition

Young, W. C., Budynas, R. G., and Sadegh, A. M., 2012, *Roark's Formulas for Stress and Strain,* 8th edition

Publisher: McGraw-Hill Co., P.O. Box 182604, Columbus, OH 43272 (www.mcgraw-hill.com)

Bjorhovde, R., Galambos, T. V., and Ravindra, M. K., 1978, "LRFD Criteria for Steel Beam-Columns," *Journal of the Structural Division*, Vol. 104, No. ST9

Duerr, D., 2006, "Pinned Connection Strength and Behavior," *Journal of Structural Engineering*, Vol. 132, No. 2

Duerr, D., 2016, "Lateral-Torsional Buckling of Suspended I-Shape Lifting Beams," *Practice Periodical on Structural Design and Construction,* Vol. 21, No. 1

Dux, P. F., and Kitipornchai, S., 1990, "Buckling of Suspended I-Beams," *Journal of Structural Engineering*, Vol. 116, No. 7, pp. 1877–1891

Fisher, J. W., Galambos, T. V., Kulak, G. L., and Ravindra, M. K., 1978, "Load and Resistance Design Criteria for Connectors," *Journal of the Structural Division,* Vol. 104, No. ST9

Galambos, T. V., and Ravindra, M. K., 1978, "Properties of Steel for Use in LRFD," *Journal of the Structural Division,* Vol. 104, No. ST9

Kitipornchai, S., and Trahair, N. S., 1980, "Buckling Properties of Monosymmetric I-Beams," *Journal of the Structural Division,* Vol. 109, No. ST5

McWhorter, J. C., Wetencamp, H. R., and Sidebottom, O. M., April 1971, "Finite Deflections of Curved Beams," *Journal of the Engineering Mechanics Division,* Vol. 97, No. EM2

[2] May also be obtained from the American National Standards Institute (ANSI), 25 West 43rd Street, New York, NY 10036.

Copyrighted material licensed to Fermi National Laboratory by Clarivate Analytics (US) LLC, subscriptions.techstreet.com, downloaded on 2020-01-31 15:43:32 +0000 by Fermi National Laboratory User.
No further reproduction or distribution is permitted.

Ravindra, M. K., and Galambos, T. V., 1978, "Load and Resistance Factor Design for Steel," *Journal of the Structural Division,* Vol. 104, No. ST9

Yura, J. A., Galambos, T. V., and Ravindra, M. K., 1978, "The Bending Resistance of Steel Beams," *Journal of the Structural Division*, Vol. 104, No. ST9

Publisher: American Society of Civil Engineers (ASCE), 1801 Alexander Bell Drive, Reston, VA 20191 (www.asce.org)

Blodgett, O. W., 1966, *Design of Welded Structures*

Publisher: The James F. Lincoln Arc Welding Foundation, 22801 St. Clair Avenue, Cleveland, OH 44117 (www.jflf.org)

Boresi, A. P., and Sidebottom, O. M., 1985, *Advanced Mechanics of Materials,* 4th edition

Kulak, G. L., Fisher, J. W., and Struik, J. H. A., 1987, *Guide to Design Criteria for Bolted and Riveted Joints,* 2nd edition

Pilkey, W. D., and Pilkey, D. F., 2008, *Peterson's Stress Concentration Factors,* 3rd edition

Ziemian, R. D., ed., 2010, *Guide to Stability Design Criteria for Metal Structures,* 6th edition

Publisher: John Wiley & Sons, Inc., 111 River Street, Hoboken, NJ 07030 (www.wiley.com)

Cornell, C. A., 1969, "A Probability-Based Structural Code," *ACI Journal,* Vol. 66, No. 12

Publisher: American Concrete Institute (ACI), 38800 Country Club Drive, Farmington Hills, MI 48331 (www.concrete.org)

DIN 6885-1 (1968), Drive Type Fastenings Without Taper Action; Parallel Keys, Keyways, Deep Pattern

Publisher: Deutsches Institut für Normung, e. V. (DIN) Am DIN-Platz Burggrafenstraße 6, 10787 Berlin, Germany (www.din.de)

Ellifritt, D. S., Wine, G., Sputo, T., and Samuel, S., 1992, "Flexural Strength of WT Sections," *Engineering Journal,* Vol. 29, No. 2

"Engineering FAQs Section 4.4.2" (www.aisc.org, 2006)

Guide for the Analysis of Guy and Stiffleg Derricks, 1974

Load and Resistance Factor Design Specification for Structural Steel Buildings, 1994 and 2000

Specification for Structural Steel Buildings, 2010

Specification for Structural Steel Buildings — Allowable Stress Design and Plastic Design, 1989

Yura, J. A., and Frank, K. H., 1985, "Testing Method to Determine the Slip Coefficient for Coatings Used in Bolted Connections," *Engineering Journal,* Vol. 22, No. 3

Publisher: American Institute of Steel Construction (AISC), 1 East Wacker Drive, Suite 700, Chicago, IL 60601 (www.aisc.org)

Lyse, I., and Godfrey, H. J., 1933, "Shearing Properties and Poisson's Ratio of Structural and Alloy Steels," *Proceedings*

Publisher: American Society for Testing and Materials (ASTM International), 100 Barr Harbor Drive, P.O. Box C700, West Conshohocken, PA 19428-2959 (www.astm.org)

Madsen, J., November 1941, "Report of Crane Girder Tests," *Iron and Steel Engineer*

Technical Report No. 6, Specification for Electric Overhead Traveling Cranes for Steel Mill Service, 2000

Publisher: Association for Iron & Steel Technology (AIST), 186 Thorn Hill Road, Warrendale, PA 15086 (www.aist.org)

SAE J1078-1994, A Recommended Method of Analytically Determining the Competence of Hydraulic Telescopic Cantilevered Crane Booms

Publisher: SAE International, 400 Commonwealth Drive, Warrendale, PA 15096 (www.sae.org)

Specification No. 70-2004, Specifications for Top Running Bridge and Gantry Type Multiple Girder Electric Overhead Traveling Cranes

Specification No. 74-2004, Specifications for Top Running and Under Running Single Girder Electric Traveling Cranes Utilizing Under Running Trolley Hoist

Publisher: Crane Manufacturers Association of America, Inc. (CMAA), 8720 Red Oak Boulevard, Charlotte, NC 28217 (www.mhia.org/cmaa)

Tolbert, R. N., 1970, "A Photoelastic Investigation of Lug Stresses and Failures," Master's Thesis, Vanderbilt University, Nashville, TN

Wilson, W. M., 1934, *The Bearing Value of Rollers,* Bulletin No. 263, University of Illinois Engineering Experiment Station, Urbana, IL (www.ideals.illinois.edu)

Wire Rope Users Manual, 4th edition, 2005

Publisher: Wire Rope Technical Board (WRTB), P.O. Box 151387, Alexandria, VA 22315-1387 (www.wireropetechnicalboard.org)

Copyrighted material licensed to Fermi National Laboratory by Clarivate Analytics (US) LLC, subscriptions.techstreet.com, downloaded on 2020-01-31 15:43:32 +0000 by Fermi National Laboratory User.
No further reproduction or distribution is permitted.

NONMANDATORY APPENDIX B
COMMENTARY FOR CHAPTER 2: LIFTER CLASSIFICATIONS[1]

B-1 GENERAL

B-1.1 Selection

The selection of a Design Category and Service Class allows the strength and useful life of the lifter to be matched to the needs of the user. A qualified person or manufacturer must assure that the Design Category and Service Class specified for a particular lifter are appropriate for the intended use so as to provide a design with adequate structural reliability and expected service life.

B-1.3 Identification

The purpose of this requirement is to ensure that the designer, manufacturer, and end user are aware of the assigned Design Category and Service Class. Typically, documents that require the indicated markings may include top-level drawings, quotations, calculations, and manuals.

B-1.4 Environment

Ambient operating temperature limits are intended only to be a guideline. The component temperature of each part of the lifter must be considered when the device is operating in an environment outside the limits defined in para. 1-4.7. The effects of dust, moisture, and corrosive atmospheric substances on the integrity and performance of a lifter cannot be specifically defined. These design considerations must be evaluated and accounted for by the lifting device manufacturer or qualified person.

B-2 DESIGN CATEGORY

When selecting a Design Category, consideration shall be given to all operations that will affect the lifting device design. The discussions of the Design Categories below and in Nonmandatory Appendix C, para. C-1.3 refer to considerations given to unintended overloads in development of the design factors. These comments are in no way to be interpreted as permitting a lifting device to be used above its rated load under any circumstances other than for load testing in accordance with ASME B30.20 or other applicable safety standards or regulations.

[1] This Appendix contains commentary that may assist in the use and understanding of Chapter 2. Paragraphs in this Appendix correspond with paragraphs in Chapter 2.

B-2.1 Design Category A

The design factor specified in Chapter 3 for Design Category A lifters is based on presumptions of rare and only minor unintended overloading, mild impact loads during routine use, and a maximum impact multiplier of 50%. These load conditions are characteristic of use of the lifter in work environments where the weights of the loads being handled are reasonably well known, and the lifting operations are conducted in a controlled manner. Typical characteristics of the application for this Design Category include lifts at slow speeds using a well-maintained lifting device under the control of a lift supervisor and experienced crane operator. This Design Category should not be used in any environment where severe conditions or use are present.

Design Category A is intended to apply to lifting devices used in controlled conditions. Practical considerations of various work environments indicate that the high numbers of load cycles that correspond to Service Class 1 and higher commonly equate to usage conditions under which the design factor of Design Category A is inappropriate. Thus, the use of Design Category A is restricted to lifting device applications with low numbers of load cycles (Service Class 0).

B-2.2 Design Category B

The design factor specified in Chapter 3 for Design Category B lifters is based on presumptions (compared to Design Category A) of a greater uncertainty in the weight of the load being handled, the possibility of somewhat greater unintended overloads, rougher handling of the load, which will result in higher impact loads, and a maximum impact multiplier of 100%. These load conditions are characteristic of use of the lifter in work environments where the weights of the loads being handled may not be well known, and the lifting operations are conducted in a more rapid, production-oriented manner. Typical characteristics of the application for this Design Category include rough usage and lifts in adverse, less controlled conditions. Design Category B will generally be appropriate for lifters that are to be used in severe environments. However, the Design Category B design factor does not necessarily account for all adverse environmental effects.

Copyrighted material licensed to Fermi National Laboratory by Clarivate Analytics (US) LLC, subscriptions.techstreet.com, downloaded on 2020-01-31 15:43:32 +0000 by Fermi National Laboratory User.
No further reproduction or distribution is permitted.

Table B-3-1 Service Class Life

Load Cycles per Day	Desired Life, yr				
	1	5	10	20	30
5	0	0	0	1	1
10	0	0	1	1	2
25	0	1	1	2	2
50	0	1	2	2	3
100	1	2	2	3	3
200	1	2	3	3	4
300	2	3	3	4	4
750	2	3	4	4	4
1,000	2	3	4	4	4

(17) **B-2.3 Design Category C**

Design Category C is reserved for use in specialized applications in industries that require lifting device design based on the larger design factor associated with this Design Category.

B-3 SERVICE CLASS

Design for fatigue involves an economic decision between desired life and cost. The intent is to provide the owner with the opportunity for more economical designs for the cases where duty service is less severe. A choice of five Service Classes is provided. The load cycle ranges shown in Table 2-3-1 are consistent with the requirements of AWS D14.1/D14.1M.

Table B-3-1 may assist in determining the required Service Class based on load cycles per day and service life desired.

Copyrighted material licensed to Fermi National Laboratory by Clarivate Analytics (US) LLC, subscriptions.techstreet.com, downloaded on 2020-01-31 15:43:32 +0000 by Fermi National Laboratory User.
No further reproduction or distribution is permitted.

NONMANDATORY APPENDIX C COMMENTARY FOR CHAPTER 3: STRUCTURAL DESIGN[1]

C-1 GENERAL

C-1.1 Purpose

The member allowable stresses defined in Chapter 3 have generally been derived based on the assumption of the members being prismatic. Design of tapered members may require additional considerations. References such as AISC (2000), Appendix F3 and Blodgett (1966), section 4.6 may be useful for the design of tapered members.

C-1.2 Loads

The structural members and mechanical components of a below-the-hook lifting device are to be designed for the forces imposed by the lifted load (a value normally equal to the rated load), the weight of the device's parts, and any forces such as gripping or lateral forces that result from the function of the device. The inclusion of lateral forces in this paragraph is intended to refer to calculated lateral forces that occur as a result of the intended or expected use of the lifter. This provision is not intended to require the use of an arbitrary lateral load in lifter design. For most designs, an added impact allowance is not required. This issue is discussed further in paras. C-1.3 and C-5.1.

(17) C-1.3 Static Design Basis

The static strength design provisions defined in Chapter 3 for Design Categories A and B have been derived using a probabilistic analysis of the static and dynamic loads to which lifters may be subjected and the uncertainties with which the strength of the lifter members and connections may be calculated. The load and strength uncertainties are related to a design factor N_d using eq. (C-1) (Cornell, 1969; Shigley and Mischke, 2001).

$$N_d = \frac{1 + \beta\sqrt{V_R^2 + V_S^2 - \beta^2 V_R^2 V_S^2}}{1 - \beta^2 V_R^2} \qquad \text{(C-1)}$$

The term V_R is the coefficient of variation of the element strength. Values of the coefficient of variation for different types of structural members and connections have been determined in an extensive research program sponsored by the American Iron and Steel Institute (AISI) and published in a series of papers in the September 1978 issue (Vol. 104, No. ST9) of the *Journal of the Structural Division* from the American Society of Civil Engineers. Maximum values of V_R equal to 0.151 for strength limits of yielding or buckling and 0.180 for strength limits of fracture and for connection design were taken from this research and used for development of the BTH design factors.

The term V_S is the coefficient of variation of the spectrum of loads to which the lifter may be subjected. The BTH Committee developed a set of static and dynamic load spectra based on limited crane loads research and the experience of the Committee members.

Design Category A lifters are considered to be used at relatively high percentages of their rated loads. Due to the level of planning generally associated with the use of these lifters, the likelihood of lifting a load greater than the rated load is considered small and such overloading is not likely to exceed 5%. The distribution of lifted loads relative to rated load is considered to be as shown in Table C-1.3-1.

A similar distribution was developed for dynamic loading. AISC (1974) reports the results of load tests performed on stiffleg derricks in which dynamic loading to the derrick was measured. Typical dynamic loads were approximately 20% of the lifted load, and the upper bound dynamic load was about 50% of the lifted load. Tests on overhead cranes (Madsen, 1941) showed somewhat less severe dynamic loading. Given these published data and experience-based judgments, a load spectrum was established for dynamic loading (see Table C-1.3-2).

A second dynamic load spectrum was developed for a special case of Design Category A. Some manufacturers of heavy equipment such as power generation machinery build lifters to be used for the handling of their equipment. As such, the lifters are used at or near 100% of rated load for every lift, but due to the nature of those lifts, the dynamic loading can reasonably be expected to be somewhat less than the normal Design Category A lifters. The distribution developed for this special case is shown in Table C-1.3-2.

The range of total loads was developed by computing the total load (static plus dynamic) for the combination of the spectra shown in Tables C-1.3-1 and C-1.3-2. The appropriate statistical analysis yielded loading coefficients of variation of 0.156 for the standard design spectrum and 0.131 for the special case.

[1] This Appendix contains commentary that may assist in the use and understanding of Chapter 3. Paragraphs in this Appendix correspond with paragraphs in Chapter 3.

Copyrighted material licensed to Fermi National Laboratory by Clarivate Analytics (US) LLC, subscriptions.techstreet.com, downloaded on 2020-01-31 15:43:32 +0000 by Fermi National Laboratory User.
No further reproduction or distribution is permitted.

Table C-1.3-1 Design Category A Static Load Spectrum

Percent of Rated Load	Percent of Lifts
80	40
90	55
100	4
105	1

Table C-1.3-2 Design Category A Dynamic Load Spectrum

Dynamic Load as Percent of Lifted Load	Percent of Lifts (Standard)	Percent of Lifts (Special Case)
0	25	20
10	45	58
20	20	15
30	7	4
40	2	2
50	1	1

The last term in eq. (C-1) to be established is the reliability index, β. The Committee noted that the then-current structural steel specification (AISC, 2000) is based on a value of $\beta = 3$. This value was adopted for Design Category A. Using the values thus established, design factors (rounded off) of 2.00 for limits of yielding or buckling and 2.40 for limits of fracture and for connection design are calculated using eq. (C-1).

Prior to the first edition of ASME B30.20 in 1986, engineers in construction commonly designed lifting devices using AISC allowable stresses and perhaps an impact factor typically not greater than 25% of the lifted load. The AISC specification provides nominal design factors of 1.67 for yielding and buckling and 2.00 for fracture and connections. Thus, the prior design method, which is generally recognized as acceptable for lifters now classified as Design Category A, provided design factors with respect to the rated load of 1.67 to 2.08 for member design and 2.00 to 2.50 for connection design. The agreement of the computed BTH design factors with the prior practice was felt to validate the results.

A similar process was conducted for Design Category B. In this application, lifters are expected to serve reliably under more severe conditions, including abuse, and may be used to lift a broader range of loads. Thus, the range of both static and dynamic loads is greater for Design Category B than for Design Category A. The BTH Committee developed a set of static and dynamic load spectra based on the judgment and experience of the Committee members. Table C-1.3-3 is the static load spectrum; Table C-1.3-4 is the dynamic load spectrum.

Again, the total load spectrum was developed and the statistical analysis performed. The coefficient of variation for the loading was found to be 0.392.

Table C-1.3-3 Design Category B Static Load Spectrum

Percent of Rated Load	Percent of Lifts
50	40
75	50
100	8
120	2

Table C-1.3-4 Design Category B Dynamic Load Spectrum

Dynamic Load as Percent of Lifted Load	Percent of Lifts
0	1
10	17
20	25
30	19
40	13
50	9
60	6
70	4
80	3
90	2
100	1

Due to the greater uncertainty of the loading conditions associated with Design Category B, the Committee elected to use a higher value of the reliability index. The value of 3 used for Design Category A was increased by 10% for Design Category B ($\beta = 3.3$).

Using these values, eq. (C-1) is used to compute (rounded off) design factors of 3.00 for limits of yielding and buckling and 3.40 for limits of fracture and for connection design. In order to maintain the same relationship between member and connection design factors for both Design Categories, the connection design factor is specified as $3.00 \times 1.20 = 3.60$.

Lifters used in the industrial applications of the types for which Design Category B is appropriate have traditionally been proportioned using a design factor of 3, as has been required by ASME B30.20 since its inception. As with the Design Category A design factor, this agreement between the design factor calculated on the basis of the load spectra shown in Tables C-1.3-3 and C-1.3-4 and the design factor that has been successfully used for decades validates the process.

The provisions in this Standard address the most common types of members and connections used in the design of below-the-hook lifting devices. In some cases, it will be necessary for the qualified person to employ design methods not specifically addressed herein. Regardless of the method used, the required member and connection design factors must be provided.

Copyrighted material licensed to Fermi National Laboratory by Clarivate Analytics (US) LLC, subscriptions.techstreet.com, downloaded on 2020-01-31 15:43:32 +0000 by Fermi National Laboratory User.
No further reproduction or distribution is permitted.

The design factors specified in para. 3-1.3 are stated to be minimum values. Design Category C is defined to accommodate the use of ASME BTH-1 in special applications where a higher structural design factor is required. Some lifter applications may result in greater dynamic loading that will necessitate higher design factors. It is the responsibility of a qualified person to determine when higher design factors are required and to determine the appropriate values in such cases.

C-1.5 Curved Members

Curved members subject to bending exhibit stresses on the inside (concave side) of the curve that are higher than would be computed using the conventional bending stress formulas. As with straight beam bending theory, the derivation of the equations by which the bending stresses of a curved beam may be computed is based on the fundamental assumption that plane sections remain plane (Young et al., 2012).

This stress distribution exists in the elastic range only. Members that are of such proportions and material properties that allow development of a plastic moment will have the same maximum bending strength (i.e., plastic moment) as a straight member (McWhorter et al., 1971; Boresi and Sidebottom, 1985). Thus, the peak bending stresses due to curvature must be evaluated for members subject to cyclic loading and for which the fatigue life must be assessed, but need not be considered for static strength design for members in which the plastic moment can be attained.

Classical design aids such as Table 9.1 in *Roark's Formulas for Stress and Strain* (Young et al., 2012) may be used to satisfy the requirement defined in this section.

C-1.6 Allowable Stresses

The allowable stresses and stress ranges defined in sections 3-2, 3-3, and 3-4 are to be compared to average or nominal calculated stresses due to the loads defined in para. 3-1.2. It is not intended that highly localized peak stresses that may be determined by computer-aided methods of analysis and that may be blunted by confined yielding must be less than the specified allowable stresses.

(17) C-1.7 Member Properties

The manufacturing tolerance for the wall thickness of hollow shapes is ±10%. Manufacturers in the United States consistently produce electric-resistance-welded (ERW) shapes with a wall thickness that is near the lower bound of this tolerance. Consequently, the American Institute of Steel Construction and the Steel Tube Institute of North America recommend that section properties and other calculations be based on 0.93 times the nominal wall thickness for ERW shapes. Submerged-arc-welded (SAW) shapes are produced with a wall thickness that is near the nominal thickness, so these products require no such reduction.

C-2 MEMBER DESIGN (17)

The requirements for the design of flexural members make use of the terms *compact section* and *noncompact section*. A compact section is capable of developing a fully plastic stress distribution before the onset of local buckling in one or more of its compression elements. A noncompact section is capable of developing the yield stress in its compression elements before local buckling occurs, but cannot resist inelastic local buckling at the strain levels required for a fully plastic stress distribution.

Compact and noncompact sections are defined by the width–thickness ratios of their compression elements. The appropriate limits for various compression elements common to structural members are given in Table 3-2.2-1. Compression elements that are more slender than is permitted for noncompact shapes may fail by local buckling at stress levels below the yield stress. Refer to paras. C-2.3.6, last paragraph, and C-2.6, last paragraph, for comments on slender elements.

C-2.2 Compression Members (17)

The formulas that define the allowable axial compression stress are based on the assumption of peak residual compressive stresses equal to $0.50F_y$, as is commonly used in structural design specifications today (e.g., AISC, 1974; AIST Technical Report No. 6; CMAA Specification No. 70; SAE J1078). The slenderness ratio equal to C_c defines the border between elastic and inelastic buckling.

As is the practice in the above-cited standards, the design factor with respect to buckling in the inelastic range [eq. (3-3)] varies from N_d to $1.15N_d$. The design factor in the elastic range [eq. (3-5)] is a constant $1.15N_d$ with respect to buckling. The lower design factor for very short compression members is justified by the insensitivity of such members to the bending that may occur due to accidental eccentricities. The higher design factor for more slender members provides added protection against the effect of such bending stresses.

The effective length factor, K, provides a convenient method of determining the buckling strength of compression members other than pin-ended struts. General guidance on the value of K for various situations can be found in Chapter C of the AISC Commentary (AISC, 1989 or AISC, 2010). Extensive coverage of the topic can be found in Ziemian (2010).

C-2.3 Flexural Members

C-2.3.1 Major Axis Bending of Compact Sections. The bending limit state for members with compact sections and braced at intervals not exceeding the spacing defined by eq. (3-7) or eq. (3-8) is the plastic moment. Generally, structural shapes have a major axis shape factor (ratio of plastic modulus to section modulus) that

Copyrighted material licensed to Fermi National Laboratory by Clarivate Analytics (US) LLC, subscriptions.techstreet.com, downloaded on 2020-01-31 15:43:32 +0000 by Fermi National Laboratory User.
No further reproduction or distribution is permitted.

is 12% or greater (AISC 1989 Commentary). The allowable stress for members with compact sections provides a lower bound design factor of N_d with respect to the plastic moment.

(17) **C-2.3.2 Major Axis and Minor Axis Bending of Compact Sections With Unbraced Length Greater Than L_p and Noncompact Sections.** Noncompact shapes that are braced at intervals not exceeding the spacing defined by eq. (3-10) or eq. (3-11) have a limit state moment that equates to outer fiber yield. The allowable bending stress for members with noncompact sections provides a design factor of N_d with respect to outer fiber yielding.

I-shape members and channels bent about the major axis may fail in lateral torsional buckling. Equations (3-13) through (3-17) define allowable bending compression stresses that provide a design factor of N_d with respect to this limit state.

The allowable bending stress for box members for which the unbraced length exceeds L_r is not defined in Chapter 3. A study of box members has shown that a member of such a length has an impractically low bending strength and, thus, is very unlikely to be used in a lifting device.

The allowable moment expression for tees and double-angle members [eq. (3-18)] defines the allowable moment based on the lesser limit state of lateral torsional buckling (Kitipornchai and Trahair, 1980) or yield (Ellifritt et al., 1992). The value of $a = 1.25$ is based on para. C-2.3.4.

Equations (3-10) through (3-18) are based on the behavior of beams that are restrained against twist or lateral displacement at the ends of the unbraced length, L_b. Suspended beams exhibit different behavior with respect to lateral torsional buckling (Dux and Kitipornchai, 1990). I-shape beams show a buckling strength less than that predicted by the standard elastic buckling equations at proportions where $(L_b / b_f)/\sqrt{EI_x/GJ}$ is greater than about 1.6. Tee-shape beams show reduced buckling strength at all proportions. The coefficient C_{LTB} in eqs. (3-16), (3-17), and (3-18) accounts for this reduced buckling strength. The derivation of the C_{LTB} equation applicable to I-shape members and a comparison to experimental data are explained in Duerr (2016). The derivations of the C_{LTB} equations for tee-shape beams are based on the same finite element analysis buckling models.

(17) **C-2.3.3 Major Axis Bending of Solid Rectangular Bars.** The provisions of this paragraph are based on AISC (2010). The coefficient 1.25 in eqs. (3-20), (3-22), and (3-24) is based on para. C-2.3.4. The coefficient C_{LTB} in eqs. (3-22) and (3-24) accounts for the reduced buckling strength of beams not braced against twist or lateral displacement at the ends of the unbraced length. The derivation of the C_{LTB} equation is based on the same finite element analysis buckling model as is developed in Duerr (2016).

C-2.3.4 Minor Axis Bending of Compact Sections, Solid Bars, and Rectangular Sections. Many shapes commonly used in lifting devices have shape factors that are significantly greater than 1.12. These include doubly symmetric I- and H-shape members with compact flanges bent about their minor axes, solid round and square bars, and solid rectangular sections bent about their minor axes. The shape factors for these shapes are typically 1.50 or greater.

The allowable bending stress for these shapes [eq. (3-25)] gives a design factor of $1.20N_d$ or greater with respect to a limit state equal to the plastic moment. This allowable stress results in a condition in which the bending stress will not exceed yield under the maximum loads defined in the load spectra on which the design factors are based. The Design Category A spectra define a maximum static load equal to 105% of the rated load and a maximum impact equal to 50% of the lifted load. Thus, the theoretical maximum bending stress is $1.25F_y$ $(1.05 \times 1.50) / 2.00 = 0.98F_y$. The Design Category B spectra define a maximum static load equal to 120% of the rated load and a maximum impact equal to 100% of the lifted load. Thus, the theoretical maximum bending stress is $1.25F_y$ $(1.20 \times 2.00)/3.00 = F_y$.

C-2.3.6 Shear on Bars, Pins, and Plates. The allowable shear stress expression is based on CMAA Specification No. 70, which specifies the allowable shear stress as a function of the shear yield stress. The shear yield stress is based on the Energy of Distortion Theory (Shigley and Mischke, 2001). The limiting slenderness ratio of plates in shear is taken from AISC (2000).

Experience has shown that members of below-the-hook lifting devices are not generally composed of slender shear elements. Therefore, provisions for the design of slender shear elements are not included in this Standard.

C-2.4 Combined Axial and Bending Stresses (17)

The design of members subject to combined axial compression and bending must recognize the moment amplification that results from P–Δ effects. The formulas given in this section, which account for the P–Δ effect, are taken from AISC (1989) with modifications as necessary to account for the design factors given in this Standard. An in-depth discussion of axial–bending interaction and the derivation of these formulas may be found in Ziemian (2010).

The interaction formulas for cylindrical members recognize that the maximum bending stresses about two mutually perpendicular axes do not occur at the same point. Equations (3-32), (3-33), and (3-34) are based on the assumption that C_m, F_e', and F_b have the same values for both axes. If different values are applicable, different interaction equations must be used (e.g., API RP 2A-WSD).

Copyrighted material licensed to Fermi National Laboratory by Clarivate Analytics (US) LLC, subscriptions.techstreet.com, downloaded on 2020-01-31 15:43:32 +0000 by Fermi National Laboratory User.
No further reproduction or distribution is permitted.

Fig. C-2.6-1 Selected Examples of Table 3-2.2-1 Requirements

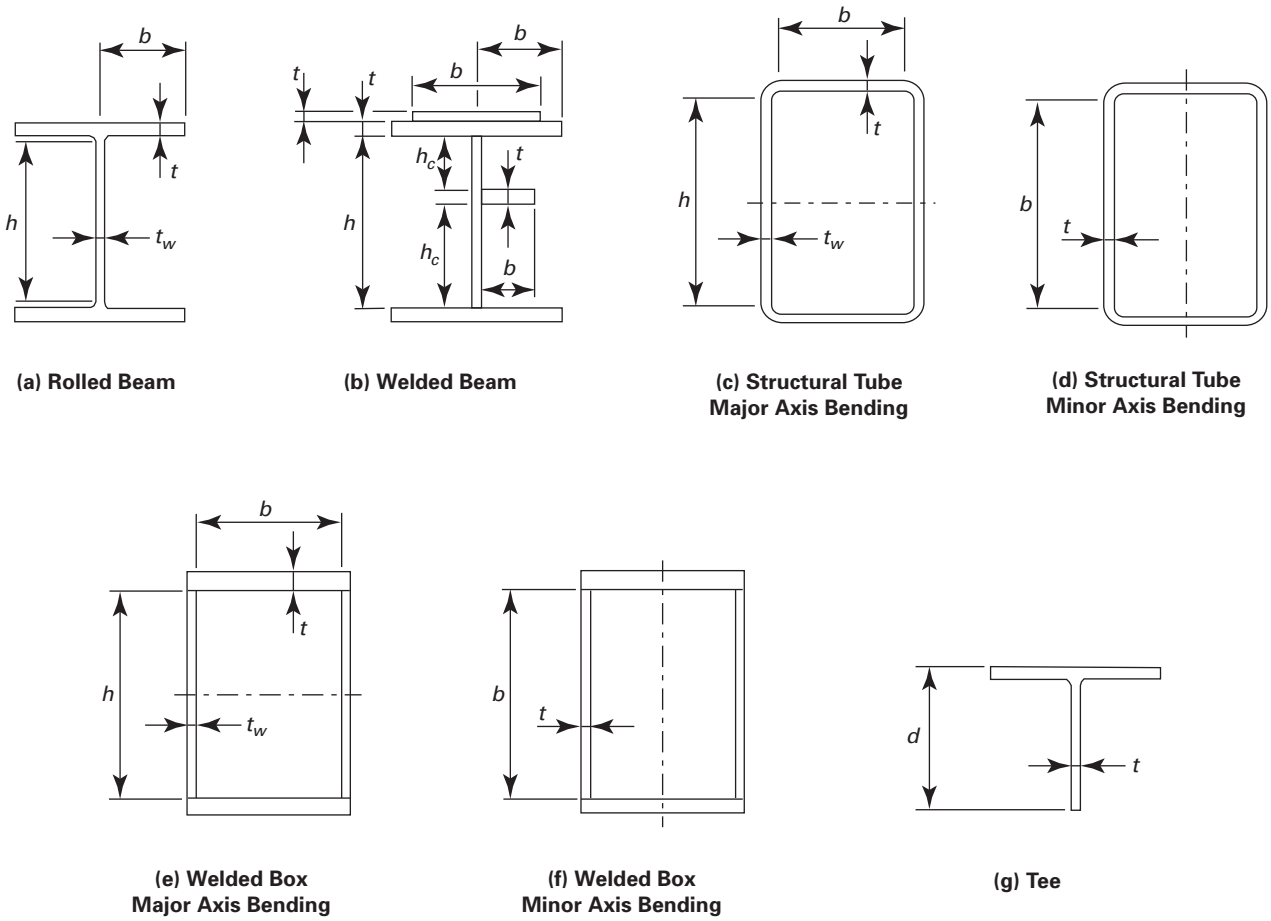

(a) Rolled Beam

(b) Welded Beam

(c) Structural Tube Major Axis Bending

(d) Structural Tube Minor Axis Bending

(e) Welded Box Major Axis Bending

(f) Welded Box Minor Axis Bending

(g) Tee

C-2.5 Combined Normal and Shear Stresses

Equation (3-37) is the Energy of Distortion Theory relationship between normal and shear stresses (Shigley and Mischke, 2001). The allowable critical stress is the material yield stress divided by the applicable design factor, N_d. For the purpose of this requirement, the directions x and y are mutually perpendicular orientations of normal stresses, not x-axis and y-axis bending stresses.

(17) **C-2.6 Local Buckling**

Compression element width–thickness ratios are defined for compact and noncompact sections in Table 3-2.2-1. The limits expressed therein are based on Tables B4.1a and B4.1b of AISC (2010). Definitions of the dimensions used in Table 3-2.2-1 for the most common compression elements are illustrated in Fig. C-2.6-1.

As with slender plates subjected to shear, below-the-hook lifting devices are not generally composed of slender compression elements. Therefore, provisions for the design of slender compression elements are not included in this Standard.

C-3 CONNECTION DESIGN

C-3.1 General

Design of bolted and welded connections follows the same basic procedures as are defined in AISC (1989) and AWS D14.1/D14.1M. The primary changes are in the levels of allowable stresses that have been established to provide design factors of 2.40 or 3.60 with respect to fracture for Design Category A or B, respectively.

The allowable bearing stress defined by eq. (3-38) is based on AISC (1989) and AISC (2000). A lower allowable bearing stress may be required between parts that will move relative to one another under load. Equation (3-39) is based on AISC (2000) and Wilson (1934). As used throughout this Standard, the terms *milled surface*, *milled*, and *milling* are intended to include surfaces that have been accurately sawed or finished to a true plane by any suitable means.

These bearing stress limits apply only to bearing between parts in the lifting device. Bearing between parts of the lifter and the item being handled must be evaluated by a qualified person, taking into account the

Copyrighted material licensed to Fermi National Laboratory by Clarivate Analytics (US) LLC, subscriptions.techstreet.com, downloaded on 2020-01-31 15:43:32 +0000 by Fermi National Laboratory User.
No further reproduction or distribution is permitted.

Fig. C-3.2-1 Block Shear

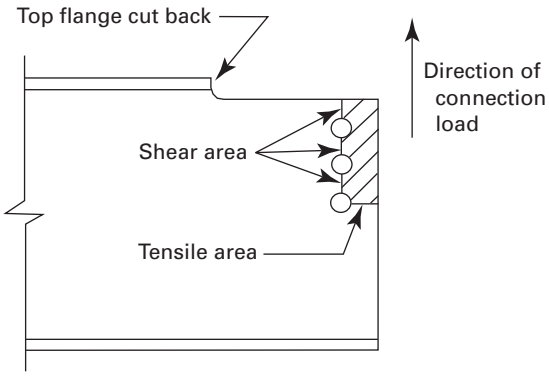

GENERAL NOTE: Failure occurs by tearing out of cross-hatched portion.

nature of the item and its practical sensitivity to local compressive stress.

(17) **C-3.2 Bolted Connections**

A *bolted connection* is defined for the purpose of this Standard as a nonpermanent connection in which two or more parts are joined together with threaded fasteners in such a manner as to prevent relative motion. A connection in which a single fastener is used is considered a *pinned connection* and shall be designed as such.

Allowable stresses or allowable loads in bolts are established as the tensile strength, the shear strength, or slip resistance divided by the appropriate design factor. The shear strength is taken as 62% of the tensile strength (Kulak et al., 1987). This value is reasonable for relatively compact bolted connections. If the length of a bolted connection exceeds about 15 in. (380 mm), the allowable shear per bolt should be reduced to account for the increasing inefficiency of the connection (Kulak et al., 1987). Equation (3-43) is derived from Kulak et al. (1987), eq. (4-1). Actual stresses due to applied loads are to be computed based on the bolt's gross area, root area, or tensile stress area, as applicable.

The configuration of bolted connections in lifting devices will likely vary greatly from the standard types of connections used in steel construction. This Standard does not attempt to address the many variances with respect to evaluating the strength of the connected pieces other than to require that the strength of the connected pieces within the connection provides a design factor of at least $1.20N_d$.

Figure C-3.2-1 illustrates the special case of block shear failure of a connected part. The strength of the part is the sum of the allowable tensile stress acting on the indicated tensile area plus the allowable shear stress acting on the indicated shear area. Although the figure shows a bolted connection, this type of failure can also occur in a welded connection.

A slip-critical connection is a connection that transmits shear load by means of the friction between the connected parts. Development of this friction, or slip resistance, is dependent on the installation tension of the bolts and the coefficient of friction at the faying surfaces. Equation (3-44) is based on a mean slip coefficient of 0.33 and a confidence level of 90% based on a calibrated wrench installation (Kulak et al., 1987).

The slip resistance of connections in which the bolt holes are more than $\frac{1}{16}$ in. (2 mm) greater than the bolts is reduced. If larger holes are necessary, the test results reported in Kulak et al. (1987) can be used to determine the reduced capacity of the connection.

The slip resistance defined in this Standard is based on faying surfaces that are free of loose mill scale, paint, and other coatings. The slip resistance of painted or coated surfaces varies greatly, depending on the type and thickness of coating. It is not practical to define a general acceptable slip resistance for such connections. Testing to determine the slip resistance is required for slip-resistant connections in which the faying surfaces are painted or otherwise coated (Yura and Frank, 1985).

The design provisions for slip-critical connections are based on experimental research (Kulak et al., 1987) on connections made with ASTM A325 and ASTM A490 bolts. In the absence of similar research results using other types and grades of bolts, para. 3-3.2 limits the types of bolts that may be used in slip-critical connections to ASTM A325 and ASTM A490.

C-3.3 Pinned Connections

A *pinned connection* is defined for the purpose of this Standard as a nonpermanent connection in which two or more parts are joined together in such a manner as to allow relative rotation. Even if a threaded fastener is used as the pin, the connection is still considered a pinned connection and shall be designed as such.

C-3.3.1 Static Strength of the Plates. A pin-connected plate may fail in the region of the pinhole in any of four modes. These are tension on the effective area on a plane through the center of the pinhole perpendicular to the line of action of the applied load, fracture on a single plane beyond the pinhole parallel to the line of action of the applied load, shear on two planes beyond the pinhole parallel to the line of action of the applied load, and out-of-plane buckling, commonly called *dishing*. (17)

The strength equations for the plates are empirical, based on research (Duerr, 2006). The effective width limit of the tensile stress area defined by eq. (3-47) serves to eliminate dishing (out-of-plane buckling of the plate) as a failure mode. Otherwise, the strength equations are fitted to the test results. The dimensions used in the formulas for pin-connected plates are illustrated in Fig. C-3.3.1-1.

Copyrighted material licensed to Fermi National Laboratory by Clarivate Analytics (US) LLC, subscriptions.techstreet.com, downloaded on 2020-01-31 15:43:32 +0000 by Fermi National Laboratory User.
No further reproduction or distribution is permitted.

Fig. C-3.3.1-1 Pin-Connected Plate Notation

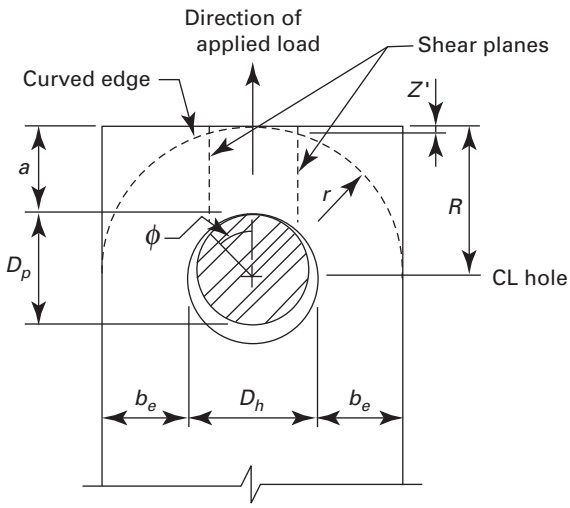

The shear strength of steel is often given in textbooks as 67% to 75% of the tensile strength. Tests have shown values commonly in the range of 80% to 95% for mild steels (Lyse and Godfrey, 1933; Tolbert, 1970) and about 70% for T-1 steel (Bibber et al., 1952). The shear strength is taken as 70% of the tensile strength in eq. (3-50).

The shear plane area defined by eq. (3-51) is based on the geometry of a plate with a straight edge beyond the hole that is perpendicular to the line of action of the applied load. Note that the term in brackets in eq. (3-51) is the length of one shear plane. If the edge of the plate is curved, as illustrated in Fig. C-3.3.1-1, the loss of shear area due to the curvature must be accounted for. If the curved edge is circular and symmetrical about an axis defined by the line of action of the applied load, then the loss of length of one shear plane, Z', is given by eq. (C-2), where r is the radius of curvature of the edge of the plate.

$$Z' = r - \sqrt{r^2 - \left(\frac{D_p}{2}\sin\phi\right)^2} \qquad \text{(C-2)}$$

Pin-connected plates may be designed with doubler plates to reinforce the pinhole region. There are two methods commonly used in practice to determine the strength contribution of the doubler plates. In one method, the strength of each plate is computed and the values summed to arrive at the total strength of the detail. In the second method, the load is assumed to be shared among the individual plates in proportion to their thicknesses (i.e., uniform bearing between the pin and the plates is assumed). The method to be used for design of any particular connection shall be determined by a qualified person based on a rational evaluation of the detail.

C-3.3.2 Combined Stresses. If a pinhole is located at a point where significant stresses are induced from member behavior such as tension or bending, the interaction of local and gross member stresses must be considered. As an example, consider the lifting beam shown in Fig. C-3.3.2-1.

Fig. C-3.3.2-1 Stiffened Plate Lifting Beam

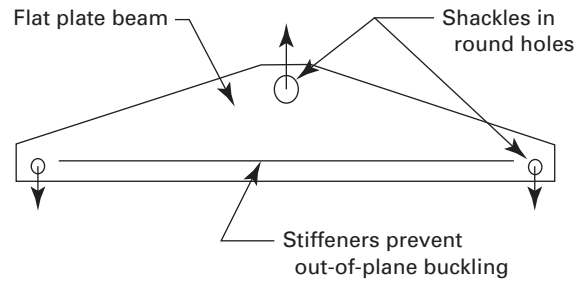

Bending of the lifting beam produces tension at the top of the plate. The vertical load in the pinhole produces shear stresses above the hole. The critical stress in this region is due to the combination of these shear and tensile stresses.

C-3.3.3 Fatigue Loading. The fatigue design requirements in section 3-4 are generally based on the provisions of AWS D14.1/D14.1M. This specification does not address pinned connections. AISC (1994) defines the same loading conditions, joint categories, and stress ranges as AWS D14.1/D14.1M, but includes pin-connected plates and eyebars. This forms the basis for classifying pinned connections as Stress Category E for fatigue design.

Pinholes in lifting devices used in construction (Service Class 0) are at times flame cut. Experience shows that this is acceptable practice for devices not subject to cyclic loading. Connections in devices designed for Service Classes 1 through 4 shall be machined as required to avoid the notches that result from flame cutting.

C-3.3.4 Bearing Stress. The bearing stress limitation serves to control deformation and wear of the plates. It is not a strength limit. The allowable bearing stress given by eq. (3-53) is based on the requirement of the 2004 and earlier editions of CMAA Specification No. 70. The allowable bearing stress for connections that will rotate under load for a large number of load cycles [eq. (3-54)] is 50% of the eq. (3-53) allowable bearing stress. Design experience has shown that these allowable bearing stresses also protect the pin against excessive deformation.

C-3.3.5 Pin-to-Hole Clearance. The static strength of a plate in a pinned connection in the region of the pinhole is a maximum when the pin is a neat fit in the hole. As the clearance between the pin and the hole increases, the strength of the plate decreases. Research (Duerr, 2006) has shown that the loss of strength is relatively slight for plates in which the hole diameter does

Copyrighted material licensed to Fermi National Laboratory by Clarivate Analytics (US) LLC, subscriptions.techstreet.com, downloaded on 2020-01-31 15:43:32 +0000 by Fermi National Laboratory User.
No further reproduction or distribution is permitted.

not exceed 110% of the pin diameter. This strength loss in connections with large pin-to-hole clearances is accounted for by the C_r and ϕ terms.

Pinned connections that must accommodate large angles of rotation under load or that will rotate under load for a large number of load cycles should be detailed with a small pin-to-hole clearance to minimize wear and play in service. The clearance to be used will depend on the actual detail and load conditions. A qualified person shall determine an acceptable clearance.

C-3.3.6 Pin Design. Pin design based on the assumption that the loads from each plate are applied to the pin as a uniformly distributed load across the thickness of the plate is a common approach. When the plates are relatively thick, however, this method can yield excessively conservative results. In such a case, use of a method that accounts for the effects of local deformations of the plates may be used (e.g., Melcon and Hoblit, 1953).

When designing a pin for a connection in which doubler plates are used to reinforce the pinhole region, the assumption of loading to the pin shall be consistent with the assumption of how the load is shared among the main (center) plate and the doubler plates.

C-3.4 Welded Connections

Structural steel welding procedures and configurations are based on AWS D14.1/D14.1M, except that design strength of welds is defined in this section to provide the required design factor. Welding procedures for other metals are to be established by a qualified person.

The lower bound shear strength of deposited weld metal is 60% of the tensile strength (Fisher et al., 1978). This is the basis for the allowable stresses for welds in AISC (2000) and AWS D14.1/D14.1M and for the requirement in eq. (3-55).

C-4 FATIGUE DESIGN

C-4.1 General

The fatigue design requirements in this section are derived from AISC (2010) and AIST Technical Report No. 6 and are appropriate for the types of steel on which the provisions of Chapter 3 are based. The use of other materials may require a different means of evaluating the fatigue life of the lifter.

C-4.2 Lifter Classifications

The allowable stress ranges given in Table 3-4.3-1 were derived based on the assumption of constant-amplitude load cycles. Lifting devices, on the other hand, are normally subjected to a spectrum of varying loads, as discussed in para. C-1.3. Thus, evaluation of the fatigue life of a lifting device in which service stresses for the maximum loading (static plus impact) were compared to the allowable ranges in Table 3-4.3-1 would be excessively conservative.

Analyses have been performed as part of the development of this Standard in which the equivalent numbers of constant-amplitude load cycles were computed for the load spectra discussed in para. C-1.3 using eq. (3-56). The results showed that the calculated life durations due to these spectra are slightly greater than the results that are obtained by comparing service stresses due to rated load static loads to the allowable stress ranges given in Table 3-4.3-1. Thus, assessment of the fatigue life of a lifter may normally be performed using only static stresses calculated from the rated load.

The fatigue life of a lifting device that will be used in a manner such that the standard load spectra are not representative of the expected loading can be evaluated using eq. (3-56), which is taken from AIST Technical Report No. 6.

C-4.3 Allowable Stress Ranges

The maximum stress ranges permitted for the various Service Classes and Stress Categories are based on the values given in Table 3 of AWS D14.1/D14.1M.

C-4.4 Stress Categories

Table 3-4.4-1, Fatigue Design Parameters, is taken from AISC (2010). The joint details in this table include all of the details shown in AWS D14.1/D14.1M, Fig. 1, as well as additional details, such as pinned connections, that are of value in lifter design. This table also has the added benefit of illustrating the likely locations of fatigue cracks, which will be of value to lifting device inspectors.

C-4.5 Tensile Fatigue in Threaded Fasteners

The provisions of para. 3-4.5 are taken from Appendix 3 of AISC (2010). The values for use in eq. (3-57) are also shown in Table 3-4.4-1.

C-4.6 Cumulative Fatigue Analysis

Typically, allowable fatigue stress range values for a particular joint detail and Service Class are selected from a table such as Table 3-4.3-1 that treats the stress range as a step function. These values are based on the maximum number of load cycles for each Service Class and consider every load cycle to be of the same magnitude, as discussed in para. C-4.2.

If one desires a design for a number of load cycles somewhere between the minimum and maximum of a particular Service Class and for a known varying amplitude, a cumulative fatigue approach using eq. (3-57) in conjunction with eq. (3-56) will give a more refined allowable stress range. This can be particularly useful in evaluating an existing lifting device for its remaining life.

The threshold stress range, F_{TH}, is the level at which a fatigue failure will not occur. That is, if the service

Copyrighted material licensed to Fermi National Laboratory by Clarivate Analytics (US) LLC, subscriptions.techstreet.com, downloaded on 2020-01-31 15:43:32 +0000 by Fermi National Laboratory User.
No further reproduction or distribution is permitted.

load stress range does not exceed F_{TH}, then the detail will perform through an unlimited number of load cycles.

Equation (3-57) and the coefficients given in para. 3-4.6 address the primary fatigue life considerations of interest in lifting device design. AISC (2010), Appendix 3 provides equations for evaluating other specific details that may be of use in certain applications. A qualified person shall evaluate the need for fatigue analysis beyond that provided by section 3-4 and apply such analyses as needed.

C-5 OTHER DESIGN CONSIDERATIONS

C-5.1 Impact Factors

The design requirements defined in Chapter 3 are based in part on upper bound vertical impact factors of 50% of the lifted load for Design Category A and 100% for Design Category B. (The loads used for the development of this Standard are discussed in depth in para. C-1.3.) Therefore, the design of lifting devices made in accordance with this Standard will not normally require the use of an impact factor. The wording of this section permits the use of an additional impact factor at the discretion of a qualified person if it is anticipated that the device will be used under conditions that may result in unusual dynamic loading.

(17) **C-5.2 Stress Concentrations**

Peak stresses due to discontinuities do not affect the ultimate strength of a structural element unless the material is brittle. [Materials are generally considered brittle, rather than ductile, if the ultimate elongation is 5% or less (Young et al., 2012).] The types of steel on which this Standard is based are all ductile materials. Thus, static strength may reasonably be computed based on average stresses. However, fatigue design must recognize stress ranges. Since fatigue-related cracks initiate at points of stress concentration due to either geometric or metallurgical discontinuities, peak stresses created by these discontinuities may need to be considered in the design of a lifter.

Stress concentration factors useful for design may be found in *Peterson's Stress Concentration Factors* (Pilkey and Pilkey, 2008) and other similar sources.

C-5.3 Deflection

The ability of a lifting device to fulfill its intended function may require that it possess a certain minimum stiffness in addition to strength. For example, a clamping device will not be able to maintain its grip if the members of the device flex excessively under load.

Due to the very broad range of lifting devices that may fall under the scope of this Standard, defining actual deflection limits for different types of devices is not practical. The intent of this section is simply to call attention to the need for consideration of deflection in the design of lifting devices.

Copyrighted material licensed to Fermi National Laboratory by Clarivate Analytics (US) LLC, subscriptions.techstreet.com, downloaded on 2020-01-31 15:43:32 +0000 by Fermi National Laboratory User.
No further reproduction or distribution is permitted.

NONMANDATORY APPENDIX D COMMENTARY FOR CHAPTER 4: MECHANICAL DESIGN[1]

D-1 GENERAL

D-1.1 Purpose

Chapter 4 is focused on the design of machine elements and those parts of a lifting device not covered by Chapter 3. Chapter 3 is frequently used in the design of mechanical components to address the strength requirements of the framework that joins the machine elements together. Mechanical drive systems, machine elements and components, and other auxiliary equipment are covered in Chapter 4.

Many lifting devices operate while suspended from building cranes and hoists, and hence need to have a seamless interface with this equipment. Therefore, various design criteria set forth by CMAA Specification No. 70, AIST Technical Report No. 6, and ASME HST-4 are the basis for many parts of the design criteria established in Chapter 4.

D-1.2 Relation to Chapter 3

When failure of a mechanical component could directly result in the unintended dropping or hazardous movement of a load, the requirements of Chapter 3 shall be used to size the component coupled with the mechanical requirements of Chapter 4. Examples include, but are not limited to, drive systems on slab tongs that hold the load, fasteners that hold hooks onto beams, and sheave shafts. There may be requirements in both Chapters 3 and 4 that need to be followed when designing a component.

Along with the forces produced by normal operation, mechanical components of lifting devices should be designed to resist the forces resulting from operating irregularities that are common in mechanical systems including jams, locked rotor torque, and overloads.

If the design factor of a commercial component is unknown, the maximum capacity of that component should be divided by the applicable value of N_d.

D-2 SHEAVES

D-2.1 Sheave Material

This section applies to sheaves that are contained in the envelope of the below-the-hook lifting device. Sheaves that are part of a separate bottom block or crane system are not covered by this Standard.

D-2.2 Running Sheaves

The pitch diameter of a sheave has a direct relationship with wire rope wear and fatigue that determines the number of cycles that the assembly can withstand. The Committee recognizes that in some special low-headroom applications the sheave size may need to be smaller to accommodate the limited space available. Extra precaution would need to be established in these cases to allow for increased wire rope wear.

For cases where the lifter's sheaves are reeved into the overhead crane's sheave package, spacing and fleet angle between the two parallel systems need to be aligned to ensure proper operation.

D-2.4 Shaft Requirement

Inspection and maintenance of sheaves and bearings require that these components be accessible. A design that requires modification or alteration of the lifter's structure to perform the inspection or maintenance of sheaves and bearings puts an undue hardship on the user and can deter proper care of the equipment.

D-2.5 Lubrication

Lubrication systems, grease lines, self-lubricating bearings, or oil-impregnated bearings are all methods that will ensure the lubrication of the bearings. Particular care should be taken when evaluating the lubrication method since some types of self-lubricating bearings cannot withstand severe loading environments.

D-2.6 Sheave Design (17)

The interface between the wire rope and the sheave has a direct relationship on the longevity of the wire rope. To prevent premature wearing of the wire rope, the sheave surfaces need to be smooth and tapered to allow the wire rope to easily slip into and seat in the sheave rope groove. The *Wire Rope Users Manual*, 4th edition, Table 12 provides information on sizing the wire rope groove with respect to the wire rope to allow for a proper seating surface.

D-2.7 Sheave Guard

Guards that wrap around a large portion of the sheave need to be placed close to the flange of the sheave. The guard's purpose is to prevent the wire rope from

[1] This Appendix contains commentary that may assist in the use and understanding of Chapter 4. Paragraphs in this Appendix correspond with paragraphs in Chapter 4.

Copyrighted material licensed to Fermi National Laboratory by Clarivate Analytics (US) LLC, subscriptions.techstreet.com, downloaded on 2020-01-31 15:43:32 +0000 by Fermi National Laboratory User.
No further reproduction or distribution is permitted.

jumping from the sheave. The guard needs to be placed close to the running sheave to ensure that the wire rope cannot get jammed or lodged between the sheave and the guard.

D-3 WIRE ROPE

ASME HST-4 and ASME B30.2 provide the basis of this section, which covers the wire rope applications that are a wholly attached or integral component of a below-the-hook lifting device.

D-3.1 Relation to Other Standards

This section addresses wire rope requirements for the rare application when the hoist rope of the crane (hoist) is reeved through the lifting device.

D-3.2 Rope Selection

Users of this Standard may elect to reference the *Wire Rope Users Manual* as a guideline for properly selecting wire rope.

D-3.3 Environment

The Committee left open the use of synthetic or other nonmetallic rope for special applications that occur in hazardous or abnormal industrial environments.

D-4 DRIVE SYSTEMS

Section 4-4 covers generic requirements for a drive system, while sections 4-5 through 4-8 provide specific requirements for mechanical components of a drive system.

D-4.1 Drive Adjustment

An adjustment mechanism, such as a chain or belt tightener, is recommended to maintain the design tension in flexible transmission devices. Loose chains or belts will experience accelerated wear and result in premature failure of the system.

D-4.3 Commercial Components

The use of commercial (off-the-shelf) components is encouraged to provide more flexibility to the user. A qualified person needs to consider the same operating and abnormal scenarios used in the design of the structural components, including environment, shock, and operating cycles, when incorporating commercial components into the lifting device. Additional design considerations include, but are not limited to, jams and excessive torques.

Mechanical components of the lifting device that are stressed by the force(s) created during the lift or movement of the load shall be sized in accordance with para. 4-1.2.

D-4.5 Operator Protection

The qualified person needs to consider the ASME B30.20 requirement that the operator perform inspections prior to each use. The guards and protective devices need to allow the operator to perform these inspections and not create additional hazards when the inspections are being performed. ANSI B15.1 provides the basis of these requirements.

Although guards and personnel protective equipment are safety equipment, they were incorporated into this design standard. The Committee believes these issues need to be addressed in the design phase to ensure that inspection and maintenance can be adequately performed while assuring that operator safety is maintained.

The requirement for the 200-lb (91-kg) person comes from OSHA (29 CFR 1910.179).

D-5 GEARING

D-5.3 Gear Loading

The Lewis equation, as defined by Shigley and Mischke (2001), provides the basis of eq. (4-1). The Lewis equation has been modified to accommodate material yield stress and the ASME BTH-1 design factor, N_d, from para. 3-1.3 of this Standard. Table 4-5.3-1 comes from Avallone and Baumeister (1987).

D-5.4 Relation to Other Standards (17)

The Committee decided to provide the Lewis formula to the qualified person as a simpler method to size gearing. Based on a review of a large number of gear designs, the Lewis equation coupled with the design factor, N_d, provides conservative results. As an alternative, the qualified person can use ANSI/AGMA 2001-D04 (reaffirmed January 2010) to provide a more refined analytical approach where the design parameters of the lifter are more constrained.

D-5.7 Lubrication

Methods to lubricate gearing include, but are not limited to, automatic lubrication systems and manual application. If manual application is used, the qualified person needs to provide accessibility to the gears for maintenance.

D-6 BEARINGS

D-6.2 L_{10} Bearing Life

Table 4-6.2-1 comes from a compilation of Table 2 of MIL-HDBK-1038 and several bearing companies. The resulting table was cross referenced to CMAA Specification No. 70 to verify that it does not significantly deviate.

D-6.3 Bearing Loadings

The equation for bearing life [eq. (4-2)], L_{10}, is based on the basic load rating equation for bearings found in

Copyrighted material licensed to Fermi National Laboratory by Clarivate Analytics (US) LLC, subscriptions.techstreet.com, downloaded on 2020-01-31 15:43:32 +0000 by Fermi National Laboratory User.
No further reproduction or distribution is permitted.

ANSI/ABMA 9, ANSI/ABMA 11, and Avallone and Baumeister (1987).

D-6.5 Lubrication

Lubrication systems, grease lines, self-lubricating bearings, or oil-impregnated bearings are all methods that would ensure the lubrication of the bearings. Particular care needs to be taken when evaluating the lubrication method since some types of self-lubricating bearings cannot withstand severe loading environments.

D-7 SHAFTING

D-7.5 Shaft Static Stress

Tables 4-7.5-1 and 4-7.5-2 provide minimum allowable key size versus shaft diameter requirements and come directly from ASME B17.1 and DIN 6885-1.

The static and shear stress equations represent modifications to those equations found in CMAA Specification No. 70. Only the nomenclature has been modified to more closely follow Chapter 3 of this Standard.

D-7.6 Shaft Fatigue

Stress concentration factors need to be conservatively determined to account for the fluctuating stresses resulting from the stopping and starting of the drive system. Since fatigue is the primary concern in this section, only the stress amplitudes seen during normal operating conditions need to be evaluated. Peak stresses resulting from locked rotor or jamming incidents (abnormal conditions) are not applicable in the fatigue calculation. Table 4-7.6.1-1 is based on CMAA Specification No. 70.

D-8 FASTENERS

D-8.5 Fastener Installation

Since fasteners provide little value if they are not properly torqued, the installation of the fastener is important. Acceptable installation methods include, but are not limited to, turn-of-the-nut method, torque wrenches, and electronic sensors.

D-9 GRIP SUPPORT FORCE

D-9.2 Pressure-Gripping and Indentation Lifter Support Force

The minimum value of F_s in eq. (4-16) is based on the judgment and experience of the BTH Committee members. It is the responsibility of a qualified person to determine when a higher value is required and the appropriate value in such cases. Figure 4-9.2-1 is not intended to be a free-body diagram.

D-10 VACUUM LIFTING DEVICE DESIGN

D-10.2 Vacuum Preservation

This performance-based requirement allows the use of various vacuum preservation methods (e.g., battery backup, compressed air storage, vacuum reservoir, etc.).

D-11 FLUID POWER SYSTEMS

D-11.2 Fluid Power Components

Standard hydraulic components are designed with a design factor of 4 (burst pressure/operating pressure). The design factor requirement of $1.67N_d$ defined in this section equates to a required design factor of 5 for Design Category B.

No standards have been found for design factors of pneumatic components. The value of $0.50N_d$ is based on the judgment and experience of the BTH Committee members.

Copyrighted material licensed to Fermi National Laboratory by Clarivate Analytics (US) LLC, subscriptions.techstreet.com, downloaded on 2020-01-31 15:43:32 +0000 by Fermi National Laboratory User.
No further reproduction or distribution is permitted.

NONMANDATORY APPENDIX E
COMMENTARY FOR CHAPTER 5: ELECTRICAL COMPONENTS[1]

E-1 GENERAL

E-1.1 Purpose

The primary focus of Chapter 5 is directed toward lifters that are attached to cranes, hoists, and other lifting equipment. Therefore, electrical equipment used on these lifters is governed by ANSI/NFPA 70. Sometimes a lifter could be a component part of a machine tool system and could be subject to the requirements of ANSI/NFPA 79 if specified, but the standard lifter is not intended to meet the electrical requirements of the machine tool industry.

E-2 ELECTRIC MOTORS AND BRAKES

E-2.1 Motors

Due to the variety and complexity of below-the-hook lifting devices, the method of horsepower calculation varies with the type of lifter and is not specified in this section. The horsepower selection shall be specified by a qualified person giving full consideration to the frictional losses of the lifter, the maximum locked rotor torque required, and the geometry of the speed torque curve of the motor applied.

E-2.2 Motor Sizing

A lifter may have varying horsepower requirements as it moves through its operating range. The intent of this provision is to ensure that the motor is properly sized for the maximum effort required.

E-2.4 Insulation

This provision recognizes that Class A insulation is no longer used in quality motor manufacturing.

E-2.5 Brakes

Back-driving may present a safety problem not obvious to everyone and is stated to emphasize its importance. The 150% value equals the requirement for hoist brakes as defined in CMAA Specification No. 70 and AIST Technical Report No. 6.

E-2.6 Voltage Rating

The wiring between the crane hoist and the lifter must be sized to limit voltage drops, as well as current-carrying capacity.

[1] This Appendix contains commentary that may assist in the use and understanding of Chapter 5. Paragraphs in this Appendix correspond with paragraphs in Chapter 5.

E-3 OPERATOR INTERFACE

E-3.1 Locating the Operator Interface

Below-the-hook lifters are not stand-alone machines. They are intended to be used with cranes, hoists, and other lifting equipment. When attached to a lifting apparatus, the resulting electrical system must be coordinated by a qualified person with due consideration for safety and performance.

E-3.3 Operating Levers

These provisions parallel requirements found in the electrical sections of other established crane and hoist specifications such as CMAA Specification No. 70 and CMAA Specification No. 74 and are listed in this Standard to maintain compatibility between the crane and lifter.

E-3.4 Control Circuits

These provisions parallel requirements found in the electrical sections of other established crane and hoist specifications such as CMAA Specification No. 70 and CMAA Specification No. 74 and are listed in this Standard to maintain compatibility between the crane and lifter.

E-3.5 Push Button Type

These provisions parallel requirements found in the electrical sections of other established crane and hoist specifications such as CMAA Specification No. 70 and CMAA Specification No. 74 and are listed in this Standard to maintain compatibility between the crane and lifter.

E-3.6 Push Button Markings

These provisions parallel requirements found in the electrical sections of other established crane and hoist specifications such as CMAA Specification No. 70 and CMAA Specification No. 74 and are listed in this Standard to maintain compatibility between the crane and lifter.

E-4 CONTROLLERS AND AUXILIARY EQUIPMENT

E-4.2 Control Location

Below-the-hook lifting devices are intended to be suspended from a hoist hook and may be subjected to unintended abuse and harsh environments depending on

Copyrighted material licensed to Fermi National Laboratory by Clarivate Analytics (US) LLC, subscriptions.techstreet.com, downloaded on 2020-01-31 15:43:32 +0000 by Fermi National Laboratory User.
No further reproduction or distribution is permitted.

conditions of use. These provisions are intended to ensure protection of the electrical devices mounted on the lifter.

E-4.4 Magnetic Control Contactors

These provisions parallel requirements found in the electrical sections of established crane and hoist specifications such as CMAA Specification No. 70 and CMAA Specification No. 74 and are listed in this Standard to maintain compatibility between the crane and lifter.

E-4.5 Static and Inverter Controls

These provisions parallel requirements found in the electrical sections of established crane and hoist specifications such as CMAA Specification No. 70 and CMAA Specification No. 74 and are listed in this Standard to maintain compatibility between the crane and lifter.

E-4.7 Rectifiers

This provision recognizes that a DC motor can be reversed via a two-wire circuit when diode logic is applied, and lists specifications for the type and size of diodes to be used.

E-4.8 Electrical Enclosures

These provisions parallel requirements found in the electrical sections of established crane and hoist specifications such as CMAA Specification No. 70 and CMAA Specification No. 74 and are listed in this Standard to maintain compatibility between the crane and lifter.

E-5 GROUNDING

E-5.1 Grounding Method

This provision recognizes that a high-quality ground may be required at the lifter when electronic controls are employed.

Copyrighted material licensed to Fermi National Laboratory by Clarivate Analytics (US) LLC, subscriptions.techstreet.com, downloaded on 2020-01-31 15:43:32 +0000 by Fermi National Laboratory User.
No further reproduction or distribution is permitted.

NONMANDATORY APPENDIX F COMMENTARY FOR CHAPTER 6: LIFTING MAGNET DESIGN[1] (17)

F-3 SELECTION AND DESIGN

Calculations for magnet design are commonly performed in SI units (m, kg, s). Therefore, the equations in Chapter 6 are presented in SI units.

F-3.3 Effective Magnet Contact Area

To determine the required contact area for a particular application, the designer must first select the materials to be employed in the fabrication of the magnet's poles. The magnetic induction and permeability characteristics of the materials used in the fabrication of the magnet's poles must be sufficient to produce the magnetic induction required for the application. Materials with permeabilities approaching that of pure iron will achieve the greatest magnetic induction levels when the source of magnetic excitation is applied. The source may be an electrical coil, permanent magnet material, or both. The contact area of the magnet is determined based on the level of flux density (lines of magnetic force) flowing from the poles. Flux is a product of the magnetic excitation and the limiting permeability of the material in the magnetic circuit. Flux density is expressed in tesla.

F-3.4 Flux Source

F-3.4.3 Permanent Magnet Flux Source. A permanent magnet uses permanent magnet material as the primary magnetic field source. The release mechanism in a permanent magnet design is traditionally achieved in two ways.

(a) Mechanically. Through some form of mechanical motion, the flux from the magnetic field source is directed in such a way that the magnetism is contained within the assembly.

(b) Electrically. A power coil(s) is used either to reverse the polarity of the magnetic field source to direct the magnetism inside of the assembly, or to cancel completely the magnetic field source.

[1] This Appendix contains commentary that may assist in the use and understanding of Chapter 6. Paragraphs in this Appendix correspond with paragraphs in Chapter 6.

Copyrighted material licensed to Fermi National Laboratory by Clarivate Analytics (US) LLC, subscriptions.techstreet.com, downloaded on 2020-01-31 15:43:32 +0000 by Fermi National Laboratory User.
No further reproduction or distribution is permitted.

INTENTIONALLY LEFT BLANK

Copyrighted material licensed to Fermi National Laboratory by Clarivate Analytics (US) LLC, subscriptions.techstreet.com, downloaded on 2020-01-31 15:43:32 +0000 by Fermi National Laboratory User.
No further reproduction or distribution is permitted.

ASME Services

ASME is committed to developing and delivering technical information. At ASME's Customer Care, we make every effort to answer your questions and expedite your orders. Our representatives are ready to assist you in the following areas:

ASME Press
Codes & Standards
Credit Card Orders
IMechE Publications
Meetings & Conferences
Member Dues Status
Member Services & Benefits
Other ASME Programs
Payment Inquiries
Professional Development
  Short Courses
Publications
Public Information
Self-Study Courses
Shipping Information
Subscriptions/Journals/Magazines
Symposia Volumes
Technical Papers

How can you reach us? It's easier than ever!

There are four options for making inquiries* or placing orders. Simply mail, phone, fax, or E-mail us and a Customer Care representative will handle your request.

Mail
ASME
150 Clove Road, 6th Floor
Little Falls, New Jersey
07424-2139

Call Toll Free
US & Canada: 800-THE-ASME
(800-843-2763)
Mexico: 95-800-THE-ASME
(95-800-843-2763)

Fax—24 hours
973-882-1717
973-882-5155

E-Mail—24 hours
customercare@asme.org

* Customer Care staff are not permitted to answer inquiries about the technical content of this code or standard. Information as to whether or not technical inquiries are issued to this code or standard is shown on the copyright page. All technical inquiries must be submitted in writing to the staff secretary. Additional procedures for inquiries may be listed within.

Copyrighted material licensed to Fermi National Laboratory by Clarivate Analytics (US) LLC, subscriptions.techstreet.com, downloaded on 2020-01-31 15:43:32 +0000 by Fermi National Laboratory User.
No further reproduction or distribution is permitted.

ASME BTH-1–2017

ISBN 978-0-7918-7135-5

Copyrighted material licensed to Fermi National Laboratory by Clarivate Analytics (US) LLC, subscriptions.techstreet.com, downloaded on 2020-01-31 15:43:32 +0000 by Fermi National Laboratory User.
No further reproduction or distribution is permitted.