ASME BPVC.IX-2019

SECTION IX

Welding, Brazing, and Fusing Qualifications

2019 ASME Boiler and Pressure Vessel Code

An International Code

Qualification Standard for Welding, Brazing, and Fusing Procedures; Welders; Brazers; and Welding, Brazing, and Fusing Operators

ASME

SETTING THE STANDARD

Copyrighted material licensed to Pacific Northwest National Laboratory by Clarivate Analytics (US) LLC, subscription@techstreet.com, downloaded on 2020-09-23 12:25:20 +0000 by Pacific Northwest National Laboratory User.
No further reproduction or distribution is permitted.

Markings such as “ASME,” “ASME Standard,” or any other marking including “ASME,” ASME logos, or the ASME Single Certification Mark shall not be used on any item that is not constructed in accordance with all of the applicable requirements of the Code or Standard. Use of ASME’s name or logos or of the ASME Single Certification Mark requires formal ASME certification; if no certification program is available, such ASME markings may not be used. (For Certification and Accreditation Programs, see https://www.asme.org/shop/certification-accreditation.)

Items produced by parties not formally possessing an ASME Certificate may not be described, either explicitly or implicitly, as ASME certified or approved in any code forms or other document.

Copyrighted material licensed to Fermi National Laboratory by Clarivate Analytics (US) LLC, subscriptions.techstreet.com, downloaded on 2020-09-23 17:45:20 +0000 by Fermi National Laboratory User.
No further reproduction or distribution is permitted.

AN INTERNATIONAL CODE

2019 ASME Boiler & Pressure Vessel Code

2019 Edition July 1, 2019

IX

QUALIFICATION STANDARD FOR WELDING, BRAZING, AND FUSING PROCEDURES; WELDERS; BRAZERS; AND WELDING, BRAZING, AND FUSING OPERATORS

ASME Boiler and Pressure Vessel Committee
on Welding, Brazing, and Fusing

The American Society of Mechanical Engineers

Two Park Avenue • New York, NY • 10016 USA

Copyrighted material licensed to Fermi National Laboratory by Clarivate Analytics (US) LLC, subscriptions.techstreet.com, downloaded on 2020-09-23 17:45:20 +0000 by Fermi National Laboratory User.
No further reproduction or distribution is permitted.

Date of Issuance: July 1, 2019

This international code or standard was developed under procedures accredited as meeting the criteria for American National Standards and it is an American National Standard. The Standards Committee that approved the code or standard was balanced to assure that individuals from competent and concerned interests have had an opportunity to participate. The proposed code or standard was made available for public review and comment that provides an opportunity for additional public input from industry, academia, regulatory agencies, and the public-at-large.

ASME does not “approve," "certify," “rate,” or “endorse” any item, construction, proprietary device, or activity.

ASME does not take any position with respect to the validity of any patent rights asserted in connection with any items mentioned in this document, and does not undertake to insure anyone utilizing a standard against liability for infringement of any applicable letters patent, nor assume any such liability. Users of a code or standard are expressly advised that determination of the validity of any such patent rights, and the risk of infringement of such rights, is entirely their own responsibility.

Participation by federal agency representative(s) or person(s) affiliated with industry is not to be interpreted as government or industry endorsement of this code or standard.

ASME accepts responsibility for only those interpretations of this document issued in accordance with the established ASME procedures and policies, which precludes the issuance of interpretations by individuals.

The endnotes and preamble in this document (if any) are part of this American National Standard.

ASME Collective Membership Mark

ASME Single Certification Mark

"ASME" and the above ASME symbols are registered trademarks of The American Society of Mechanical Engineers.

No part of this document may be reproduced in any form, in an electronic retrieval system or otherwise, without the prior written permission of the publisher.

Library of Congress Catalog Card Number: 56-3934
Printed in the United States of America

Adopted by the Council of The American Society of Mechanical Engineers, 1914; latest edition 2019.

The American Society of Mechanical Engineers
Two Park Avenue, New York, NY 10016-5990

Copyright © 2019 by
THE AMERICAN SOCIETY OF MECHANICAL ENGINEERS
All rights reserved

Copyrighted material licensed to Fermi National Laboratory by Clarivate Analytics (US) LLC, subscriptions.techstreet.com, downloaded on 2020-09-23 17:45:20 +0000 by Fermi National Laboratory User.
No further reproduction or distribution is permitted.

TABLE OF CONTENTS

List of Sections x
Foreword xii
Statement of Policy on the Use of the ASME Single Certification Mark and Code Authorization in Advertising xiv
Statement of Policy on the Use of ASME Marking to Identify Manufactured Items xiv
Submittal of Technical Inquiries to the Boiler and Pressure Vessel Standards Committees xv
Personnel xviii
Introduction xl
Summary of Changes xliii
List of Changes in Record Number Order xlix
Cross-Referencing and Stylistic Changes in the Boiler and Pressure Vessel Code lii

Part QG **General Requirements** 1
QG-100 Scope 1
QG-109 Definitions 4

Part QW **Welding** 15

Article I **Welding General Requirements** 15
QW-100 Scope 15
QW-110 Weld Orientation 15
QW-120 Test Positions for Groove Welds 15
QW-130 Test Positions for Fillet Welds 16
QW-140 Types and Purposes of Tests and Examinations 16
QW-150 Tension Tests 17
QW-160 Guided-Bend Tests 18
QW-170 Toughness Tests 19
QW-180 Fillet-Weld Tests 19
QW-190 Other Tests and Examinations 21

Article II **Welding Procedure Qualifications** 29
QW-200 General 29
QW-210 Preparation of Test Coupon 32
QW-220 Hybrid Welding Procedure Variables 34
QW-250 Welding Variables 34
QW-290 Temper Bead Welding 68

Article III **Welding Performance Qualifications** 72
QW-300 General 72
QW-310 Qualification Test Coupons 74
QW-320 Retests and Renewal of Qualification 75
QW-350 Welding Variables for Welders 76
QW-360 Welding Variables for Welding Operators 77
QW-380 Special Processes 78

Article IV **Welding Data** 81
QW-400 Variables 81
QW-410 Technique 91
QW-420 Base Metal Groupings 95
QW-430 F-Numbers 171
QW-440 Weld Metal Chemical Composition 181
QW-450 Specimens 182
QW-460 Graphics 187

Copyrighted material licensed to Fermi National Laboratory by Clarivate Analytics (US) LLC, subscriptions.techstreet.com, downloaded on 2020-09-23 17:45:20 +0000 by Fermi National Laboratory User.
No further reproduction or distribution is permitted.

QW-470	Etching — Processes and Reagents	229
Article V	**Standard Welding Procedure Specifications (SWPSs)**	231
QW-500	General	231
QW-510	Adoption of SWPSs	231
QW-520	Use of SWPSs Without Discrete Demonstration	231
QW-530	Forms	232
QW-540	Production Use of SWPSs	232
Part QB	**Brazing**	233
Article XI	**Brazing General Requirements**	233
QB-100	Scope	233
QB-110	Braze Orientation	233
QB-120	Test Positions for Lap, Butt, Scarf, or Rabbet Joints	233
QB-140	Types and Purposes of Tests and Examinations	234
QB-150	Tension Tests	234
QB-160	Guided-Bend Tests	235
QB-170	Peel Tests	236
QB-180	Sectioning Tests and Workmanship Coupons	236
Article XII	**Brazing Procedure Qualifications**	237
QB-200	General	237
QB-210	Preparation of Test Coupon	239
QB-250	Brazing Variables	239
Article XIII	**Brazing Performance Qualifications**	243
QB-300	General	243
QB-310	Qualification Test Coupons	244
QB-320	Retests and Renewal of Qualification	244
QB-350	Brazing Variables for Brazers and Brazing Operators	244
Article XIV	**Brazing Data**	245
QB-400	Variables	245
QB-410	Technique	246
QB-420	P-Numbers	246
QB-430	F-Numbers	246
QB-450	Specimens	249
QB-460	Graphics	253
Part QF	**Plastic Fusing**	272
Article XXI	**Plastic Fusing General Requirements**	272
QF-100	Scope	272
QF-110	Fused Joint Orientation	272
QF-120	Test Positions	272
QF-130	Data Acquisition and Evaluation	272
QF-140	Examinations and Tests	273
Article XXII	**Fusing Procedure Qualifications**	279
QF-200	General	279
QF-220	Standard Fusing Procedure Specifications	282
QF-250	Fusing Variables	286
Article XXIII	**Plastic Fusing Performance Qualifications**	289
QF-300	General	289
QF-310	Qualification Test Coupons	290
QF-320	Retests and Renewal of Qualification	290
QF-360	Essential Variables for Performance Qualification of Fusing Operators	290
Article XXIV	**Plastic Fusing Data**	292
QF-400	Variables	292

Copyrighted material licensed to Fermi National Laboratory by Clarivate Analytics (US) LLC, subscriptions.techstreet.com, downloaded on 2020-09-23 17:45:20 +0000 by Fermi National Laboratory User.
No further reproduction or distribution is permitted.

QF-420 Material Groupings . . . 293
QF-450 Pipe Fusing Limits . . . 294
QF-460 Graphics . . . 295
QF-480 Forms . . . 308
QF-490 Definitions . . . 322

Nonmandatory Appendix B **Welding and Brazing Forms** . . . 323
B-100 Forms . . . 323

Nonmandatory Appendix D **P-Number Listing** . . . 334

Mandatory Appendix E **Permitted SWPSs** . . . 353

Mandatory Appendix F **Standard Units for Use in Equations** . . . 356

Nonmandatory Appendix G **Guidance for the Use of U.S. Customary and SI Units in the ASME Boiler and Pressure Vessel Code** . . . 357
G-100 Use of Units in Equations . . . 357
G-200 Guidelines Used to Develop SI Equivalents . . . 357
G-300 Soft Conversion Factors . . . 359

Nonmandatory Appendix H **Waveform Controlled Welding** . . . 360
H-100 Background . . . 360
H-200 Waveform Controlled Welding and Heat Input Determination . . . 360
H-300 New Procedures Qualifications . . . 360
H-400 Existing Qualified Procedures . . . 361
H-500 Performance Qualifications . . . 361

Mandatory Appendix J **Guideline for Requesting P-Number Assignments for Base Metals not Listed in Table QW/QB-422** . . . 362
J-100 Introduction . . . 362
J-200 Request Format . . . 362
J-300 Submittals . . . 362

Nonmandatory Appendix K **Guidance on Invoking Section IX Requirements in Other Codes, Standards, Specifications, and Contract Documents** . . . 363
K-100 Background and Purpose . . . 363
K-200 Scope of Section IX and What Referencing Documents Must Address . . . 363
K-300 Recommended Wording — General . . . 363

Nonmandatory Appendix L **Welders and Welding Operators Qualified Under ISO 9606-1:2012 and ISO 14732-2013** . . . 366
L-100 Introduction . . . 366
L-200 Administrative Requirements . . . 366
L-300 Technical Requirements . . . 366
L-400 Testing Requirements . . . 366

FIGURES

QG-109.2.1 Typical Single and Multibead Layers . . . 14
QG-109.2.2 Typical Single Bead Layers . . . 14
QW-191.1.2.2(b)(4) Rounded Indication Charts . . . 22
QW-461.1 Positions of Welds — Groove Welds . . . 187
QW-461.2 Positions of Welds — Fillet Welds . . . 188
QW-461.3 Groove Welds in Plate — Test Positions . . . 189
QW-461.4 Groove Welds in Pipe — Test Positions . . . 189
QW-461.5 Fillet Welds in Plate — Test Positions . . . 190
QW-461.6 Fillet Welds in Pipe — Test Positions . . . 191
QW-461.7 Stud Welds — Test Positions . . . 192
QW-461.8 Stud Welds — Welding Positions . . . 192
QW-461.10 Rotating Tool Design Characteristics (FSW) Referenced in QW-410 . . . 194
QW-462.1(a) Tension — Reduced Section — Plate . . . 195

Copyrighted material licensed to Fermi National Laboratory by Clarivate Analytics (US) LLC, subscriptions.techstreet.com, downloaded on 2020-09-23 17:45:20 +0000 by Fermi National Laboratory User.
No further reproduction or distribution is permitted.

QW-462.1(b) Tension — Reduced Section — Pipe 195
QW-462.1(c) Tension — Reduced Section Alternate for Pipe 196
QW-462.1(d) Tension — Reduced Section — Turned Specimens 196
QW-462.1(e) Tension — Full Section — Small Diameter Pipe 197
QW-462.2 Side Bend 198
QW-462.3(a) Face and Root Bends — Transverse 199
QW-462.3(b) Face and Root Bends — Longitudinal 200
QW-462.4(a) Fillet Welds in Plate — Procedure 200
QW-462.4(b) Fillet Welds in Plate — Performance 201
QW-462.4(c) Fillet Welds in Pipe — Performance 201
QW-462.4(d) Fillet Welds in Pipe — Procedure 202
QW-462.5(a) Chemical Analysis and Hardness Specimen Corrosion-Resistant and Hard-Facing Weld Metal Overlay 202
QW-462.5(b) Chemical Analysis Specimen, Hard-Facing Overlay Hardness, and Macro Test Location(s) for Corrosion-Resistant and Hard-Facing Weld Metal Overlay 203
QW-462.5(c) Pipe Bend Specimen — Corrosion-Resistant Weld Metal Overlay 204
QW-462.5(d) Plate Bend Specimens — Corrosion-Resistant Weld Metal Overlay 205
QW-462.5(e) Plate Macro, Hardness, and Chemical Analysis Specimens — Corrosion-Resistant and Hard-Facing Weld Metal Overlay 206
QW-462.7.1 Resistance Seam Weld Test Coupon 206
QW-462.7.2 Seam Weld Section Specimen Removal 207
QW-462.7.3 Resistance Weld Nugget Section Test Specimens 207
QW-462.8.1 Spot Welds in Sheets 208
QW-462.8.2 Seam Weld Peel Test Specimen and Method 209
QW-462.9 Spot Welds in Sheet 210
QW-462.12 Nomenclature for Temper Bead Welding 212
QW-462.13 Measurement of Temper Bead Overlap 213
QW-463.1(a) Plates — Less Than 3/4 in. (19 mm) Thickness Procedure Qualification 213
QW-463.1(b) Plates — 3/4 in. (19 mm) and Over Thickness and Alternate From 3/8 in. (10 mm) but Less Than 3/4 in. (19 mm) Thickness Procedure Qualification 213
QW-463.1(c) Plates — Longitudinal Procedure Qualification 214
QW-463.1(d) Procedure Qualification 214
QW-463.1(e) Procedure Qualification 215
QW-463.1(f) Toughness Test Specimen Location 215
QW-463.2(a) Plates — Less Than 3/4 in. (19 mm) Thickness Performance Qualification 216
QW-463.2(b) Plates — 3/4 in. (19 mm) and Over Thickness and Alternate From 3/8 in. (10 mm) but Less Than 3/4 in. (19 mm) Thickness Performance Qualification 216
QW-463.2(c) Plates — Longitudinal Performance Qualification 217
QW-463.2(d) Performance Qualification 217
QW-463.2(e) Performance Qualification 218
QW-463.2(f) Pipe — NPS 10 (DN 250) Assembly Performance Qualification 218
QW-463.2(g) NPS 6 (DN 150) or NPS 8 (DN 200) Assembly Performance Qualification 219
QW-463.2(h) Performance Qualification 220
QW-464.1 Procedure Qualification Test Coupon and Test Specimens 221
QW-464.2 Performance Qualification Test Coupons and Test Specimens 222
QW-466.1 Test Jig Dimensions 223
QW-466.2 Guided-Bend Roller Jig 225
QW-466.3 Guided-Bend Wrap Around Jig 225
QW-466.4 Stud-Weld Bend Jig 226
QW-466.5 Torque Testing Arrangement for Stud Welds 227
QW-466.6 Suggested Type Tensile Test Figure for Stud Welds 228
QW-469.1 Butt Joint 228
QW-469.2 Alternative Butt Joint 228
QB-461.1 Flow Positions 253
QB-461.2 Test Flow Positions 254
QB-462.1(a) Tension — Reduced Section for Butt and Scarf Joints — Plate 255

Copyrighted material licensed to Fermi National Laboratory by Clarivate Analytics (US) LLC, subscriptions.techstreet.com, downloaded on 2020-09-23 17:45:20 +0000 by Fermi National Laboratory User.
No further reproduction or distribution is permitted.

QB-462.1(b) Tension — Reduced Section for Butt, Lap, and Scarf Joints — Pipe 256
QB-462.1(c) Tension — Reduced Section for Lap and Rabbet Joints — Plate 257
QB-462.1(e) Tension — Full Section for Lap, Scarf, and Butt Joints — Small Diameter Pipe 258
QB-462.1(f) Support Fixture for Reduced-Section Tension Specimens 259
QB-462.2(a) Transverse First and Second Surface Bends — Plate and Pipe 260
QB-462.2(b) Longitudinal First and Second Surface Bends — Plate 260
QB-462.3 Lap Joint Peel Specimen 261
QB-462.4 Lap Joint Section Specimen (See QB-181) 261
QB-462.5 Workmanship Coupons 262
QB-463.1(a) Plates Procedure Qualification 263
QB-463.1(b) Plates Procedure Qualification 263
QB-463.1(c) Plates Procedure Qualification 264
QB-463.1(d) Plates Procedure Qualification 265
QB-463.1(e) Pipe — Procedure Qualification 266
QB-463.2(a) Plates Performance Qualification 267
QB-463.2(b) Plates Performance Qualification 268
QB-463.2(c) Pipe Performance Qualification 269
QB-466.1 Guided-Bend Jig 270
QB-466.2 Guided-Bend Roller Jig 271
QB-466.3 Guided-Bend Wrap Around Jig 271
QF-221.1 Required Minimum Melt Bead Size 284
QF-461.1 Fusing Positions 295
QF-461.2 Fusing Test Positions 296
QF-462(a) Cross Section of Upset Beads for Butt-Fused PE Pipe 297
QF-462(b) Cross Section of Upset Beads for Sidewall-Fused Fitting (Profile at Crotch of Fitting) 298
QF-463 Bend Test Specimen Removal, Configuration, and Testing 299
QF-464 HSTIT Specimen Configuration and Dimensions 301
QF-465 HSTIT Specimen Failure Examples 302
QF-466 Electrofusion Crush Test 303
QF-467 Electrofusion Bend Test 304
QF-468 Fusion Zone Void Criteria 305
QF-469 Electrofusion Peel Test 306
QF-470 Short-Term Hydrostatic Test Specimen 307
K-305 Proposed Code Case Template 365

TABLES

QW-252 Welding Variables Procedure Specifications (WPS) — Oxyfuel Gas Welding (OFW) 36
QW-252.1 Welding Variables Procedure Specifications (WPS) — Oxyfuel Gas Welding (OFW) 37
QW-253 Welding Variables Procedure Specifications (WPS) — Shielded Metal-Arc Welding (SMAW) 38
QW-253.1 Welding Variables Procedure Specifications (WPS) — Shielded Metal-Arc Welding (SMAW) 39
QW-254 Welding Variables Procedure Specifications (WPS) — Submerged-Arc Welding (SAW) . . . 40
QW-254.1 Welding Variables Procedure Specifications (WPS) — Submerged-Arc Welding (SAW) . . . 41
QW-255 Welding Variables Procedure Specifications (WPS) — Gas Metal-Arc Welding (GMAW and FCAW) 42
QW-255.1 Welding Variables Procedure Specifications (WPS) — Gas Metal-Arc Welding (GMAW and FCAW) 44
QW-256 Welding Variables Procedure Specifications (WPS) — Gas Tungsten-Arc Welding (GTAW) 45
QW-256.1 Welding Variables Procedure Specifications (WPS) — Gas Tungsten-Arc Welding (GTAW) 47
QW-257 Welding Variables Procedure Specifications (WPS) — Plasma-Arc Welding (PAW) 48
QW-257.1 Welding Variables Procedure Specifications (WPS) — Plasma-Arc Welding (PAW) 50
QW-258 Welding Variables Procedure Specifications (WPS) — Electroslag Welding (ESW) 52
QW-258.1 Welding Variables Procedure Specifications (WPS) — Electroslag Welding (ESW) 53
QW-259 Welding Variables Procedure Specifications (WPS) — Electrogas Welding (EGW) 54
QW-260 Welding Variables Procedure Specifications (WPS) — Electron Beam Welding (EBW) 55
QW-261 Welding Variables Procedure Specifications (WPS) — Stud Welding 56

Copyrighted material licensed to Fermi National Laboratory by Clarivate Analytics (US) LLC, subscriptions.techstreet.com, downloaded on 2020-09-23 17:45:20 +0000 by Fermi National Laboratory User.
No further reproduction or distribution is permitted.

QW-262	Welding Variables Procedure Specifications (WPS) — Inertia and Continuous Drive Friction Welding	57
QW-263	Welding Variables Procedure Specifications (WPS) — Resistance Welding	58
QW-264	Welding Variables Procedure Specifications (WPS) — Laser Beam Welding (LBW)	59
QW-264.1	Welding Variables Procedure Specifications (WPS) — Laser Beam Welding (LBW)	60
QW-264.2	Welding Variables Procedure Specifications (WPS) — Low-Power Density Laser Beam Welding (LLBW)	61
QW-265	Welding Variables Procedure Specifications (WPS) — Flash Welding	63
QW-266	Welding Variables Procedure Specifications (WPS) — Diffusion Welding (DFW)	64
QW-267	Welding Variables Procedure Specifications — Friction Stir Welding (FSW)	65
QW-288.1	Essential Variables for Procedure Qualification of Tube-to-Tubesheet Welding (All Welding Processes Except Explosion Welding)	67
QW-288.2	Essential Variables for Procedure Qualification of Tube-to-Tubesheet Welding (Explosion Welding)	67
QW-290.4	Welding Variables for Temper Bead Procedure Qualification	69
QW-352	Oxyfuel Gas Welding (OFW)	76
QW-353	Shielded Metal-Arc Welding (SMAW)	76
QW-354	Semiautomatic Submerged-Arc Welding (SAW)	76
QW-355	Semiautomatic Gas Metal-Arc Welding (GMAW)	76
QW-356	Manual and Semiautomatic Gas Tungsten-Arc Welding (GTAW)	77
QW-357	Manual and Semiautomatic Plasma-Arc Welding (PAW)	77
QW-388	Essential Variables for Tube-to-Tubesheet Performance Qualification	80
QW-416	Welding Variables	94
QW/QB-422	Ferrous and Nonferrous P-Numbers	97
QW-432	F-Numbers	171
QW-442	A-Numbers	181
QW-451.1	Groove-Weld Tension Tests and Transverse-Bend Tests	182
QW-451.2	Groove-Weld Tension Tests and Longitudinal-Bend Tests	183
QW-451.3	Fillet-Weld Tests	183
QW-451.4	Fillet Welds Qualified by Groove-Weld Tests	183
QW-452.1(a)	Test Specimens	184
QW-452.1(b)	Thickness of Weld Metal Qualified	184
QW-452.3	Groove-Weld Diameter Limits	185
QW-452.4	Small Diameter Fillet-Weld Test	185
QW-452.5	Fillet-Weld Test	185
QW-452.6	Fillet Qualification by Groove-Weld Tests	186
QW-453	Procedure and Performance Qualification Thickness Limits and Test Specimens for Hard-Facing (Wear-Resistant) and Corrosion-Resistant Overlays	186
QW-461.9	Performance Qualification — Position and Diameter Limitations	193
QW-462.10(a)	Shear Strength Requirements for Spot or Projection Weld Specimens	211
QW-462.10(b)	Shear Strength Requirements for Spot or Projection Weld Specimens	211
QW-462.10(c)	Shear Strength Requirements for Spot or Projection Weld Specimens	211
QW-473.3-1	Makeup of Equations for Aqua Regia and Lepito's Etch	229
QB-252	Torch Brazing (TB)	239
QB-253	Furnace Brazing (FB)	240
QB-254	Induction Brazing (IB)	240
QB-255	Resistance Brazing (RB)	241
QB-256	Dip Brazing — Salt or Flux Bath (DB)	241
QB-257	Dip Brazing — Molten Metal Bath (DB)	242
QB-432	F-Numbers	246
QB-451.1	Tension Tests and Transverse-Bend Tests — Butt and Scarf Joints	249
QB-451.2	Tension Tests and Longitudinal Bend Tests — Butt and Scarf Joints	249
QB-451.3	Tension Tests and Peel Tests — LAP Joints	250
QB-451.4	Tension Tests and Section Tests — Rabbet Joints	250
QB-451.5	Section Tests — Workmanship Coupon Joints	251
QB-452.1	Peel or Section Tests — Butt, Scarf, Lap, Rabbet Joints	252

Copyrighted material licensed to Fermi National Laboratory by Clarivate Analytics (US) LLC, subscriptions.techstreet.com, downloaded on 2020-09-23 17:45:20 +0000 by Fermi National Laboratory User.
No further reproduction or distribution is permitted.

QB-452.2 Section Tests — Workmanship Specimen Joints 252
QB-461.3 Procedure and Performance Qualification Position Limitations 255
QF-144.2 Testing Speed Requirements 276
QF-144.2.3 277
QF-202.2.2 Electrofusion Procedure Qualification Test Coupons Required 282
QF-221.2 Maximum Heater Plate Removal Time for Pipe-to-Pipe Butt and Sidewall Fusing 285
QF-222.1 Electrofusion Material Combinations 286
QF-254 Fusing Variables Procedure Specification 287
QF-255 Fusing Variables Procedure Specification 287
QF-256 Manual Butt-Fusing Variables Procedure Specification 288
QF-257 Fusing Variables Procedure Specification 288
QF-362 Essential Variables Applicable to Fusing Operators 291
QF-422 Material Grouping 293
QF-452.3 Pipe Fusing Diameter Limits 294
F-100 Standard Units for Use in Equations 356

FORMS

QF-482(a) Suggested Format for Butt-Fusing Procedure Specifications (FPS or SFPS) 308
QF-482(b) Suggested Format for Electrofusion Fusing Procedure Specification (FPS or MEFPS) 309
QF-482(c) Suggested Format for Sidewall-Fusing Procedure Specification (FPS or SFPS) 310
QF-483(a) Suggested Format for Butt-Fusing Procedure Qualification Records (PQR) 311
QF-483(b) Suggested Format for Electrofusion Fusing Procedure Qualification Records (PQR) 313
QF-483(c) Suggested Format for Sidewall-Fusing Procedure Qualification Records (PQR) 316
QF-484(a) Suggested Format for Butt-Fusing Machine Operator Performance Qualifications (FPQ) 318
QF-484(b) Suggested Format for Electrofusion Fusing Operator Performance Qualification (FPQ) 319
QF-484(c) Suggested Format for Sidewall-Fusing Machine Operator Performance Qualifications (FPQ) . . 320
QF-485 Suggested Format for Plastic Pipe Fusing Data Acquisition Log Review 321
QW-482 Suggested Format for Welding Procedure Specifications (WPS) 324
QW-483 Suggested Format for Procedure Qualification Records (PQR) 326
QW-484A Suggested Format A for Welder Performance Qualifications (WPQ) 328
QW-484B Suggested Format B for Welding Operator Performance Qualifications (WOPQ) 329
QW-485 Suggested Format for Demonstration of Standard Welding Procedure Specifications (SWPS) . 330
QB-482 Suggested Format for a Brazing Procedure Specification (BPS) 331
QB-483 Suggested Format for a Brazing Procedure Qualification Record (PQR) 332
QB-484 Suggested Format for a Brazer/Brazing Operator Performance Qualification (BPQ) 333

Copyrighted material licensed to Fermi National Laboratory by Clarivate Analytics (US) LLC, subscriptions.techstreet.com, downloaded on 2020-09-23 17:45:20 +0000 by Fermi National Laboratory User.
No further reproduction or distribution is permitted.

(19)

LIST OF SECTIONS

SECTIONS

I Rules for Construction of Power Boilers

II Materials
- Part A — Ferrous Material Specifications
- Part B — Nonferrous Material Specifications
- Part C — Specifications for Welding Rods, Electrodes, and Filler Metals
- Part D — Properties (Customary)
- Part D — Properties (Metric)

III Rules for Construction of Nuclear Facility Components
- Subsection NCA — General Requirements for Division 1 and Division 2
- Appendices
- Division 1
  - Subsection NB — Class 1 Components
  - Subsection NC — Class 2 Components
  - Subsection ND — Class 3 Components
  - Subsection NE — Class MC Components
  - Subsection NF — Supports
  - Subsection NG — Core Support Structures
- Division 2 — Code for Concrete Containments
- Division 3 — Containment Systems for Transportation and Storage of Spent Nuclear Fuel and High-Level Radioactive Material
- Division 5 — High Temperature Reactors

IV Rules for Construction of Heating Boilers

V Nondestructive Examination

VI Recommended Rules for the Care and Operation of Heating Boilers

VII Recommended Guidelines for the Care of Power Boilers

VIII Rules for Construction of Pressure Vessels
- Division 1
- Division 2 — Alternative Rules
- Division 3 — Alternative Rules for Construction of High Pressure Vessels

IX Welding, Brazing, and Fusing Qualifications

X Fiber-Reinforced Plastic Pressure Vessels

XI Rules for Inservice Inspection of Nuclear Power Plant Components
- Division 1 — Rules for Inspection and Testing of Components of Light-Water-Cooled Plants
- Division 2 — Requirements for Reliability and Integrity Management (RIM) Programs for Nuclear Power Plants

XII Rules for Construction and Continued Service of Transport Tanks

Copyrighted material licensed to Fermi National Laboratory by Clarivate Analytics (US) LLC, subscriptions.techstreet.com, downloaded on 2020-09-23 17:45:20 +0000 by Fermi National Laboratory User.
No further reproduction or distribution is permitted.

INTERPRETATIONS

Interpretations are issued in real time in ASME's Interpretations Database at http://go.asme.org/Interpretations. Historical BPVC interpretations may also be found in the Database.

CODE CASES

The Boiler and Pressure Vessel Code committees meet regularly to consider proposed additions and revisions to the Code and to formulate Cases to clarify the intent of existing requirements or provide, when the need is urgent, rules for materials or constructions not covered by existing Code rules. Those Cases that have been adopted will appear in the appropriate 2019 Code Cases book: "Boilers and Pressure Vessels" or "Nuclear Components." Each Code Cases book is updated with seven Supplements. Supplements will be sent or made available automatically to the purchasers of the Code Cases books up to the publication of the 2021 Code. Code Case users can check the current status of any Code Case at http://go.asme.org/BPVCCDatabase. Code Case users can also view an index of the complete list of Boiler and Pressure Vessel Code Cases and Nuclear Code Cases at http://go.asme.org/BPVCC.

Copyrighted material licensed to Fermi National Laboratory by Clarivate Analytics (US) LLC, subscriptions.techstreet.com, downloaded on 2020-09-23 17:45:20 +0000 by Fermi National Laboratory User.
No further reproduction or distribution is permitted.

(19)

FOREWORD*

In 1911, The American Society of Mechanical Engineers established the Boiler and Pressure Vessel Committee to formulate standard rules for the construction of steam boilers and other pressure vessels. In 2009, the Boiler and Pressure Vessel Committee was superseded by the following committees:

(a) Committee on Power Boilers (I)

(b) Committee on Materials (II)

(c) Committee on Construction of Nuclear Facility Components (III)

(d) Committee on Heating Boilers (IV)

(e) Committee on Nondestructive Examination (V)

(f) Committee on Pressure Vessels (VIII)

(g) Committee on Welding, Brazing, and Fusing (IX)

(h) Committee on Fiber-Reinforced Plastic Pressure Vessels (X)

(i) Committee on Nuclear Inservice Inspection (XI)

(j) Committee on Transport Tanks (XII)

(k) Technical Oversight Management Committee (TOMC)

Where reference is made to "the Committee" in this Foreword, each of these committees is included individually and collectively.

The Committee's function is to establish rules of safety relating only to pressure integrity, which govern the construction** of boilers, pressure vessels, transport tanks, and nuclear components, and the inservice inspection of nuclear components and transport tanks. The Committee also interprets these rules when questions arise regarding their intent. The technical consistency of the Sections of the Code and coordination of standards development activities of the Committees is supported and guided by the Technical Oversight Management Committee. This Code does not address other safety issues relating to the construction of boilers, pressure vessels, transport tanks, or nuclear components, or the inservice inspection of nuclear components or transport tanks. Users of the Code should refer to the pertinent codes, standards, laws, regulations, or other relevant documents for safety issues other than those relating to pressure integrity. Except for Sections XI and XII, and with a few other exceptions, the rules do not, of practical necessity, reflect the likelihood and consequences of deterioration in service related to specific service fluids or external operating environments. In formulating the rules, the Committee considers the needs of users, manufacturers, and inspectors of pressure vessels. The objective of the rules is to afford reasonably certain protection of life and property, and to provide a margin for deterioration in service to give a reasonably long, safe period of usefulness. Advancements in design and materials and evidence of experience have been recognized.

This Code contains mandatory requirements, specific prohibitions, and nonmandatory guidance for construction activities and inservice inspection and testing activities. The Code does not address all aspects of these activities and those aspects that are not specifically addressed should not be considered prohibited. The Code is not a handbook and cannot replace education, experience, and the use of engineering judgment. The phrase *engineering judgment* refers to technical judgments made by knowledgeable engineers experienced in the application of the Code. Engineering judgments must be consistent with Code philosophy, and such judgments must never be used to overrule mandatory requirements or specific prohibitions of the Code.

The Committee recognizes that tools and techniques used for design and analysis change as technology progresses and expects engineers to use good judgment in the application of these tools. The designer is responsible for complying with Code rules and demonstrating compliance with Code equations when such equations are mandatory. The Code neither requires nor prohibits the use of computers for the design or analysis of components constructed to the

* The information contained in this Foreword is not part of this American National Standard (ANS) and has not been processed in accordance with ANSI's requirements for an ANS. Therefore, this Foreword may contain material that has not been subjected to public review or a consensus process. In addition, it does not contain requirements necessary for conformance to the Code.

** *Construction*, as used in this Foreword, is an all-inclusive term comprising materials, design, fabrication, examination, inspection, testing, certification, and pressure relief.

Copyrighted material licensed to Fermi National Laboratory by Clarivate Analytics (US) LLC, subscriptions.techstreet.com, downloaded on 2020-09-23 17:45:20 +0000 by Fermi National Laboratory User.
No further reproduction or distribution is permitted.

requirements of the Code. However, designers and engineers using computer programs for design or analysis are cautioned that they are responsible for all technical assumptions inherent in the programs they use and the application of these programs to their design.

The rules established by the Committee are not to be interpreted as approving, recommending, or endorsing any proprietary or specific design, or as limiting in any way the manufacturer's freedom to choose any method of design or any form of construction that conforms to the Code rules.

The Committee meets regularly to consider revisions of the rules, new rules as dictated by technological development, Code Cases, and requests for interpretations. Only the Committee has the authority to provide official interpretations of this Code. Requests for revisions, new rules, Code Cases, or interpretations shall be addressed to the Secretary in writing and shall give full particulars in order to receive consideration and action (see Submittal of Technical Inquiries to the Boiler and Pressure Vessel Standards Committees). Proposed revisions to the Code resulting from inquiries will be presented to the Committee for appropriate action. The action of the Committee becomes effective only after confirmation by ballot of the Committee and approval by ASME. Proposed revisions to the Code approved by the Committee are submitted to the American National Standards Institute (ANSI) and published at http://go.asme.org/BPVCPublicReview to invite comments from all interested persons. After public review and final approval by ASME, revisions are published at regular intervals in Editions of the Code.

The Committee does not rule on whether a component shall or shall not be constructed to the provisions of the Code. The scope of each Section has been established to identify the components and parameters considered by the Committee in formulating the Code rules.

Questions or issues regarding compliance of a specific component with the Code rules are to be directed to the ASME Certificate Holder (Manufacturer). Inquiries concerning the interpretation of the Code are to be directed to the Committee. ASME is to be notified should questions arise concerning improper use of the ASME Single Certification Mark.

When required by context in this Section, the singular shall be interpreted as the plural, and vice versa, and the feminine, masculine, or neuter gender shall be treated as such other gender as appropriate.

Copyrighted material licensed to Fermi National Laboratory by Clarivate Analytics (US) LLC, subscriptions.techstreet.com, downloaded on 2020-09-23 17:45:20 +0000 by Fermi National Laboratory User.
No further reproduction or distribution is permitted.

(19) # STATEMENT OF POLICY ON THE USE OF THE ASME SINGLE CERTIFICATION MARK AND CODE AUTHORIZATION IN ADVERTISING

ASME has established procedures to authorize qualified organizations to perform various activities in accordance with the requirements of the ASME Boiler and Pressure Vessel Code. It is the aim of the Society to provide recognition of organizations so authorized. An organization holding authorization to perform various activities in accordance with the requirements of the Code may state this capability in its advertising literature.

Organizations that are authorized to use the ASME Single Certification Mark for marking items or constructions that have been constructed and inspected in compliance with the ASME Boiler and Pressure Vessel Code are issued Certificates of Authorization. It is the aim of the Society to maintain the standing of the ASME Single Certification Mark for the benefit of the users, the enforcement jurisdictions, and the holders of the ASME Single Certification Mark who comply with all requirements.

Based on these objectives, the following policy has been established on the usage in advertising of facsimiles of the ASME Single Certification Mark, Certificates of Authorization, and reference to Code construction. The American Society of Mechanical Engineers does not "approve," "certify," "rate," or "endorse" any item, construction, or activity and there shall be no statements or implications that might so indicate. An organization holding the ASME Single Certification Mark and/or a Certificate of Authorization may state in advertising literature that items, constructions, or activities "are built (produced or performed) or activities conducted in accordance with the requirements of the ASME Boiler and Pressure Vessel Code," or "meet the requirements of the ASME Boiler and Pressure Vessel Code." An ASME corporate logo shall not be used by any organization other than ASME.

The ASME Single Certification Mark shall be used only for stamping and nameplates as specifically provided in the Code. However, facsimiles may be used for the purpose of fostering the use of such construction. Such usage may be by an association or a society, or by a holder of the ASME Single Certification Mark who may also use the facsimile in advertising to show that clearly specified items will carry the ASME Single Certification Mark.

(19) # STATEMENT OF POLICY ON THE USE OF ASME MARKING TO IDENTIFY MANUFACTURED ITEMS

The ASME Boiler and Pressure Vessel Code provides rules for the construction of boilers, pressure vessels, and nuclear components. This includes requirements for materials, design, fabrication, examination, inspection, and stamping. Items constructed in accordance with all of the applicable rules of the Code are identified with the ASME Single Certification Mark described in the governing Section of the Code.

Markings such as "ASME," "ASME Standard," or any other marking including "ASME" or the ASME Single Certification Mark shall not be used on any item that is not constructed in accordance with all of the applicable requirements of the Code.

Items shall not be described on ASME Data Report Forms nor on similar forms referring to ASME that tend to imply that all Code requirements have been met when, in fact, they have not been. Data Report Forms covering items not fully complying with ASME requirements should not refer to ASME or they should clearly identify all exceptions to the ASME requirements.

Copyrighted material licensed to Fermi National Laboratory by Clarivate Analytics (US) LLC, subscriptions.techstreet.com, downloaded on 2020-09-23 17:45:20 +0000 by Fermi National Laboratory User.
No further reproduction or distribution is permitted.

Copyrighted material licensed to Fermi National Laboratory by Clarivate Analytics (US) LLC, subscriptions.techstreet.com, downloaded on 2020-09-23 17:45:20 +0000 by Fermi National Laboratory User.
No further reproduction or distribution is permitted.

SUBMITTAL OF TECHNICAL INQUIRIES TO THE BOILER AND PRESSURE VESSEL STANDARDS COMMITTEES (19)

1 INTRODUCTION

(a) The following information provides guidance to Code users for submitting technical inquiries to the applicable Boiler and Pressure Vessel (BPV) Standards Committee (hereinafter referred to as the Committee). See the guidelines on approval of new materials under the ASME Boiler and Pressure Vessel Code in Section II, Part D for requirements for requests that involve adding new materials to the Code. See the guidelines on approval of new welding and brazing materials in Section II, Part C for requirements for requests that involve adding new welding and brazing materials ("consumables") to the Code.

Technical inquiries can include requests for revisions or additions to the Code requirements, requests for Code Cases, or requests for Code Interpretations, as described below:

(1) Code Revisions. Code revisions are considered to accommodate technological developments, to address administrative requirements, to incorporate Code Cases, or to clarify Code intent.

(2) Code Cases. Code Cases represent alternatives or additions to existing Code requirements. Code Cases are written as a Question and Reply, and are usually intended to be incorporated into the Code at a later date. When used, Code Cases prescribe mandatory requirements in the same sense as the text of the Code. However, users are cautioned that not all regulators, jurisdictions, or Owners automatically accept Code Cases. The most common applications for Code Cases are as follows:

(-a) to permit early implementation of an approved Code revision based on an urgent need

(-b) to permit use of a new material for Code construction

(-c) to gain experience with new materials or alternative requirements prior to incorporation directly into the Code

(3) Code Interpretations

(-a) Code Interpretations provide clarification of the meaning of existing requirements in the Code and are presented in Inquiry and Reply format. Interpretations do not introduce new requirements.

(-b) If existing Code text does not fully convey the meaning that was intended, or conveys conflicting requirements, and revision of the requirements is required to support the Interpretation, an Intent Interpretation will be issued in parallel with a revision to the Code.

(b) Code requirements, Code Cases, and Code Interpretations established by the Committee are not to be considered as approving, recommending, certifying, or endorsing any proprietary or specific design, or as limiting in any way the freedom of manufacturers, constructors, or Owners to choose any method of design or any form of construction that conforms to the Code requirements.

(c) Inquiries that do not comply with the following guidance or that do not provide sufficient information for the Committee's full understanding may result in the request being returned to the Inquirer with no action.

2 INQUIRY FORMAT

Submittals to the Committee should include the following information:

(a) Purpose. Specify one of the following:

(1) request for revision of present Code requirements

(2) request for new or additional Code requirements

(3) request for Code Case

(4) request for Code Interpretation

(b) Background. The Inquirer should provide the information needed for the Committee's understanding of the Inquiry, being sure to include reference to the applicable Code Section, Division, Edition, Addenda (if applicable), paragraphs, figures, and tables. Preferably, the Inquirer should provide a copy of, or relevant extracts from, the specific referenced portions of the Code.

(c) Presentations. The Inquirer may desire to attend or be asked to attend a meeting of the Committee to make a formal presentation or to answer questions from the Committee members with regard to the Inquiry. Attendance at a BPV Standards Committee meeting shall be at the expense of the Inquirer. The Inquirer's attendance or lack of attendance at a meeting will not be used by the Committee as a basis for acceptance or rejection of the Inquiry by the Committee. However, if the Inquirer's request is unclear, attendance by the Inquirer or a representative may be necessary for the Committee to understand the request sufficiently to be able to provide an Interpretation. If the Inquirer desires to make a presentation at a Committee meeting, the Inquirer should provide advance notice to the Committee Secretary, to ensure time will be allotted for the presentation in the meeting agenda. The Inquirer should consider the need for additional audiovisual equipment that might not otherwise be provided by the Committee. With sufficient advance notice to the Committee Secretary, such equipment may be made available.

3 CODE REVISIONS OR ADDITIONS

Requests for Code revisions or additions should include the following information:

(a) Requested Revisions or Additions. For requested revisions, the Inquirer should identify those requirements of the Code that they believe should be revised, and should submit a copy of, or relevant extracts from, the appropriate requirements as they appear in the Code, marked up with the requested revision. For requested additions to the Code, the Inquirer should provide the recommended wording and should clearly indicate where they believe the additions should be located in the Code requirements.

(b) Statement of Need. The Inquirer should provide a brief explanation of the need for the revision or addition.

(c) Background Information. The Inquirer should provide background information to support the revision or addition, including any data or changes in technology that form the basis for the request, that will allow the Committee to adequately evaluate the requested revision or addition. Sketches, tables, figures, and graphs should be submitted, as appropriate. The Inquirer should identify any pertinent portions of the Code that would be affected by the revision or addition and any portions of the Code that reference the requested revised or added paragraphs.

4 CODE CASES

Requests for Code Cases should be accompanied by a statement of need and background information similar to that described in 3(b) and 3(c), respectively, for Code revisions or additions. The urgency of the Code Case (e.g., project underway or imminent, new procedure) should be described. In addition, it is important that the request is in connection with equipment that will bear the ASME Single Certification Mark, with the exception of Section XI applications. The proposed Code Case should identify the Code Section and Division, and should be written as a Question and a Reply, in the same format as existing Code Cases. Requests for Code Cases should also indicate the applicable Code Editions and Addenda (if applicable) to which the requested Code Case applies.

5 CODE INTERPRETATIONS

(a) Requests for Code Interpretations should be accompanied by the following information:

(1) Inquiry. The Inquirer should propose a condensed and precise Inquiry, omitting superfluous background information and, when possible, composing the Inquiry in such a way that a "yes" or a "no" Reply, with brief limitations or conditions, if needed, can be provided by the Committee. The proposed question should be technically and editorially correct.

(2) Reply. The Inquirer should propose a Reply that clearly and concisely answers the proposed Inquiry question. Preferably, the Reply should be "yes" or "no," with brief limitations or conditions, if needed.

(3) Background Information. The Inquirer should provide any need or background information, such as described in 3(b) and 3(c), respectively, for Code revisions or additions, that will assist the Committee in understanding the proposed Inquiry and Reply.

If the Inquirer believes a revision of the Code requirements would be helpful to support the Interpretation, the Inquirer may propose such a revision for consideration by the Committee. In most cases, such a proposal is not necessary.

(b) Requests for Code Interpretations should be limited to an Interpretation of a particular requirement in the Code or in a Code Case. Except with regard to interpreting a specific Code requirement, the Committee is not permitted to consider consulting-type requests such as the following:

(1) a review of calculations, design drawings, welding qualifications, or descriptions of equipment or parts to determine compliance with Code requirements

Copyrighted material licensed to Fermi National Laboratory by Clarivate Analytics (US) LLC, subscriptions.techstreet.com, downloaded on 2020-09-23 17:45:20 +0000 by Fermi National Laboratory User.
No further reproduction or distribution is permitted.

(2) a request for assistance in performing any Code-prescribed functions relating to, but not limited to, material selection, designs, calculations, fabrication, inspection, pressure testing, or installation

(3) a request seeking the rationale for Code requirements

6 SUBMITTALS

(a) Submittal. Requests for Code Interpretation should preferably be submitted through the online Interpretation Submittal Form. The form is accessible at http://go.asme.org/InterpretationRequest. Upon submittal of the form, the Inquirer will receive an automatic e-mail confirming receipt. If the Inquirer is unable to use the online form, the Inquirer may mail the request to the following address:

Secretary
ASME Boiler and Pressure Vessel Committee
Two Park Avenue
New York, NY 10016-5990

All other Inquiries should be mailed to the Secretary of the BPV Committee at the address above. Inquiries are unlikely to receive a response if they are not written in clear, legible English. They must also include the name of the Inquirer and the company they represent or are employed by, if applicable, and the Inquirer's address, telephone number, fax number, and e-mail address, if available.

(b) Response. The Secretary of the appropriate Committee will provide a written response, via letter or e-mail, as appropriate, to the Inquirer, upon completion of the requested action by the Committee. Inquirers may track the status of their Interpretation Request at http://go.asme.org/Interpretations.

Copyrighted material licensed to Fermi National Laboratory by Clarivate Analytics (US) LLC, subscriptions.techstreet.com, downloaded on 2020-09-23 17:45:20 +0000 by Fermi National Laboratory User.
No further reproduction or distribution is permitted.

(19)

PERSONNEL
ASME Boiler and Pressure Vessel Standards Committees, Subgroups, and Working Groups

January 1, 2019

TECHNICAL OVERSIGHT MANAGEMENT COMMITTEE (TOMC)

T. P. Pastor, *Chair*
S. C. Roberts, *Vice Chair*
S. J. Rossi, *Staff Secretary*
R. W. Barnes
R. J. Basile
T. L. Bedeaux
D. L. Berger
D. A. Bowers
J. Cameron
A. Chaudouet
D. B. DeMichael
R. P. Deubler
P. D. Edwards
J. G. Feldstein
N. A. Finney
J. A. Hall
T. E. Hansen
G. W. Hembree
J. F. Henry
R. S. Hill III
W. M. Lundy
R. E. McLaughlin
G. C. Park
M. D. Rana
R. F. Reedy, Sr.
F. J. Schaaf, Jr.
G. Scribner
B. F. Shelley
W. J. Sperko
D. Srnic
R. W. Swayne
J. E. Batey, *Contributing Member*

Subgroup on Research and Development (TOMC)

R. W. Barnes, *Chair*
S. J. Rossi, *Staff Secretary*
D. A. Canonico
J. F. Henry
R. S. Hill III
W. Hoffelner
B. Hrubala
T. P. Pastor
S. C. Roberts
D. Andrei, *Contributing Member*

Subgroup on Strategic Initiatives (TOMC)

S. C. Roberts, *Chair*
S. J. Rossi, *Staff Secretary*
R. W. Barnes
T. L. Bedeaux
G. W. Hembree
J. F. Henry
R. S. Hill III
B. Hrubala
M. H. Jawad
R. E. McLaughlin
G. C. Park
T. P. Pastor
R. F. Reedy, Sr.

Special Working Group on High Temperature Technology (TOMC)

D. Dewees, *Chair*
F. W. Brust
T. D. Burchell
P. R. Donavin
B. F. Hantz
J. F. Henry
R. I. Jetter
P. Smith

HONORARY MEMBERS (MAIN COMMITTEE)

F. P. Barton
T. M. Cullen
G. E. Feigel
O. F. Hedden
M. H. Jawad
A. J. Justin
W. G. Knecht
J. LeCoff
T. G. McCarty
G. C. Millman
R. A. Moen
R. F. Reedy, Sr.

ADMINISTRATIVE COMMITTEE

T. P. Pastor, *Chair*
S. C. Roberts, *Vice Chair*
S. J. Rossi, *Staff Secretary*
R. J. Basile
D. A. Bowers
J. Cameron
D. B. DeMichael
J. A. Hall
G. W. Hembree
R. S. Hill III
R. E. McLaughlin
M. D. Rana
B. F. Shelley
R. R. Stevenson
R. W. Swayne

MARINE CONFERENCE GROUP

H. N. Patel, *Chair*
S. J. Rossi, *Staff Secretary*
J. G. Hungerbuhler, Jr.
G. Nair
N. Prokopuk
J. D. Reynolds

Copyrighted material licensed to Fermi National Laboratory by Clarivate Analytics (US) LLC, subscriptions.techstreet.com, downloaded on 2020-09-23 17:45:20 +0000 by Fermi National Laboratory User.
No further reproduction or distribution is permitted.

CONFERENCE COMMITTEE

C. B. Cantrell — Nebraska, *Chair*
J. T. Amato — Minnesota, *Vice Chair*
D. A. Douin — Ohio, *Secretary*
M. J. Adams — Ontario, Canada
W. Anderson — Mississippi
R. Becker — Colorado
R. J. Brockman — Missouri
R. J. Bunte — Iowa
J. H. Burpee — Maine
M. J. Byrum — Alabama
S. Chapman — Tennessee
D. C. Cook — California
B. J. Crawford — Georgia
E. L. Creaser — New Brunswick, Canada
J. J. Dacanay — Hawaii
C. Dautrich — North Carolina
R. DeLury — Manitoba, Canada
D. Eastman — Newfoundland and Labrador, Canada
D. A. Ehler — Nova Scotia, Canada
J. J. Esch — Delaware
T. J. Granneman II — Oklahoma
E. G. Hilton — Virginia
C. Jackson — City of Detroit, Michigan
M. L. Jordan — Kentucky
E. Kawa, Jr. — Massachusetts
A. Khssassi — Quebec, Canada
J. Klug — City of Milwaukee, Wisconsin
K. J. Kraft — Maryland
K. S. Lane — Alaska
L. C. Leet — City of Seattle, Washington
J. LeSage, Jr. — Louisiana
A. M. Lorimor — South Dakota
M. Mailman — Northwest Territories, Canada
D. E. Mallory — New Hampshire
W. McGivney — City of New York, New York
A. K. Oda — Washington
L. E. Parkey — Indiana
M. Poehlmann — Alberta, Canada
J. F. Porcella — West Virginia
C. F. Reyes — California
M. J. Ryan — City of Chicago, Illinois
D. A. Sandfoss — Nevada
M. H. Sansone — New York
A. S. Scholl — British Columbia, Canada
T. S. Seime — North Dakota
C. S. Selinger — Saskatchewan, Canada
J. E. Sharier — Ohio
N. Smith — Pennsylvania
R. Spiker — North Carolina
D. J. Stenrose — Michigan
R. J. Stimson II — Kansas
R. K. Sturm — Utah
D. K. Sullivan — Arkansas
R. Tomka — Oregon
S. R. Townsend — Prince Edward Island, Canada
R. D. Troutt — Texas
M. C. Vogel — Illinois
T. J. Waldbillig — Wisconsin
D. M. Warburton — Florida
M. Washington — New Jersey

INTERNATIONAL INTEREST REVIEW GROUP

V. Felix
Y.-G. Kim
S. H. Leong
W. Lin
O. F. Manafa
C. Minu
Y.-W. Park
A. R. R. Nogales
P. Williamson

COMMITTEE ON POWER BOILERS (BPV I)

R. E. McLaughlin, *Chair*
E. M. Ortman, *Vice Chair*
U. D'Urso, *Staff Secretary*
D. I. Anderson
J. L. Arnold
D. L. Berger
K. K. Coleman
P. D. Edwards
J. G. Feldstein
G. W. Galanes
T. E. Hansen
J. F. Henry
J. S. Hunter
G. B. Komora
F. Massi
L. Moedinger
P. A. Molvie
Y. Oishi
J. T. Pillow
M. Slater
J. M. Tanzosh
D. E. Tompkins
D. E. Tuttle
J. Vattappilly
M. Wadkinson
R. V. Wielgoszinski
F. Zeller
H. Michael, *Delegate*
D. A. Canonico, *Honorary Member*
D. N. French, *Honorary Member*
J. Hainsworth, *Honorary Member*
C. Jeerings, *Honorary Member*
W. L. Lowry, *Honorary Member*
J. R. MacKay, *Honorary Member*
T. C. McGough, *Honorary Member*
B. W. Roberts, *Honorary Member*
R. D. Schueler, Jr., *Honorary Member*
R. L. Williams, *Honorary Member*
L. W. Yoder, *Honorary Member*

Subgroup on Design (BPV I)

J. Vattappilly, *Chair*
G. B. Komora, *Vice Chair*
D. I. Anderson, *Secretary*
D. Dewees
H. A. Fonzi, Jr.
J. P. Glaspie
L. Krupp
P. A. Molvie
L. S. Tsai
M. Wadkinson
C. F. Jeerings, *Contributing Member*

Subgroup on Fabrication and Examination (BPV I)

J. L. Arnold, *Chair*
P. F. Gilston, *Vice Chair*
P. Becker, *Secretary*
D. L. Berger
S. Fincher
G. W. Galanes
J. Hainsworth
T. E. Hansen
P. Jennings
C. T. McDaris
R. E. McLaughlin
R. J. Newell
Y. Oishi
J. T. Pillow
R. V. Wielgoszinski

Subgroup on General Requirements and Piping (BPV I)

E. M. Ortman, *Chair*
D. E. Tompkins, *Vice Chair*
F. Massi, *Secretary*
P. Becker
D. L. Berger
P. D. Edwards
T. E. Hansen
M. Ishikawa
M. Lemmons
R. E. McLaughlin
B. J. Mollitor
J. T. Pillow
D. E. Tuttle
M. Wadkinson
R. V. Wielgoszinski
C. F. Jeerings, *Contributing Member*
W. L. Lowry, *Contributing Member*

Subgroup on Locomotive Boilers (BPV I)

P. Boschan, *Chair*
J. R. Braun, *Vice Chair*
S. M. Butler, *Secretary*
A. Biesecker
C. Cross
R. C. Franzen, Jr.
G. W. Galanes
D. W. Griner
S. D. Jackson
M. A. Janssen
S. A. Lee
L. Moedinger
G. M. Ray
R. B. Stone
M. W. Westland

Copyrighted material licensed to Fermi National Laboratory by Clarivate Analytics (US) LLC, subscriptions.techstreet.com, downloaded on 2020-09-23 17:45:20 +0000 by Fermi National Laboratory User.
No further reproduction or distribution is permitted.

Subgroup on Materials (BPV I)

K. K. Coleman, *Chair*
K. Hayes, *Vice Chair*
M. Lewis, *Secretary*
S. H. Bowes
D. A. Canonico
G. W. Galanes
P. F. Gilston
J. F. Henry
J. S. Hunter
E. Liebl
F. Masuyama
M. Ortolani
D. W. Rahoi
J. M. Tanzosh
J. Vattappilly
F. Zeller
M. Gold, *Contributing Member*
B. W. Roberts, *Contributing Member*

Subgroup on Solar Boilers (BPV I)

P. Jennings, *Chair*
R. E. Hearne, *Secretary*
H. A. Fonzi, Jr.
J. S. Hunter
F. Massi
E. M. Ortman

Task Group on Modernization (BPV I)

D. I. Anderson, *Chair*
U. D'Urso, *Staff Secretary*
J. L. Arnold
D. Dewees
G. W. Galanes
J. P. Glaspie
T. E. Hansen
J. F. Henry
R. E. McLaughlin
P. A. Molvie
E. M. Ortman
D. E. Tuttle
J. Vattappilly

Germany International Working Group (BPV I)

A. Spangenberg, *Chair*
M. Bremicker
P. Chavdarov
B. Daume
J. Fleischfresser
R. Helmholdt
R. Kauer
D. Koelbl
S. Krebs
T. Ludwig
R. A. Meyers
H. Michael
F. Miunske
B. Müller
H. Schroeder
M. Sykora
J. Henrichsmeyer, *Contributing Member*
P. Paluszkiewicz, *Contributing Member*
R. Uebel, *Contributing Member*

India International Working Group (BPV I)

H. Dalal, *Chair*
A. R. Patil, *Vice Chair*
T. Dhanraj, *Secretary*
P. Brahma
M. R. Kalahasthi
S. A. Kumar
A. J. Patil
S. Purkait
S. Radhakrishnan
G. V. S. Rao
M. G. Rao
U. Revisankaran
G. U. Shanker
D. K. Shrivastava
K. Singha
S. Venkataramana

COMMITTEE ON MATERIALS (BPV II)

J. Cameron, *Chair*
J. F. Grubb, *Vice Chair*
C. E. O'Brien, *Staff Secretary*
A. Appleton
A. Chaudouet
J. R. Foulds
D. W. Gandy
J. A. Hall
J. F. Henry
K. M. Hottle
M. Ishikawa
F. Masuyama
K. E. Orie
D. W. Rahoi
E. Shapiro
M. J. Slater
R. C. Sutherlin
J. M. Tanzosh
R. G. Young
F. Zeller
O. Oldani, *Delegate*
F. Abe, *Contributing Member*
H. D. Bushfield, *Contributing Member*
D. A. Canonico, *Contributing Member*
D. B. Denis, *Contributing Member*
J. D. Fritz, *Contributing Member*
M. Gold, *Contributing Member*
W. Hoffelner, *Contributing Member*
M. Katcher, *Contributing Member*
R. K. Nanstad, *Contributing Member*
M. L. Nayyar, *Contributing Member*
D. T. Peters, *Contributing Member*
B. W. Roberts, *Contributing Member*
J. J. Sanchez-Hanton, *Contributing Member*
R. W. Swindeman, *Contributing Member*
E. Upitis, *Contributing Member*
T. M. Cullen, *Honorary Member*
W. D. Edsall, *Honorary Member*
G. C. Hsu, *Honorary Member*
R. A. Moen, *Honorary Member*
C. E. Spaeder, Jr., *Honorary Member*
A. W. Zeuthen, *Honorary Member*

Executive Committee (BPV II)

J. Cameron, *Chair*
C. E. O'Brien, *Staff Secretary*
A. Appleton
A. Chaudouet
M. Gold
J. F. Grubb
J. F. Henry
M. Ishikawa
D. L. Kurle
R. W. Mikitka
E. Shapiro
M. J. Slater
R. C. Sutherlin
R. W. Swindeman

Subgroup on External Pressure (BPV II)

D. L. Kurle, *Chair*
S. Guzey, *Vice Chair*
J. A. A. Morrow, *Secretary*
L. F. Campbell
H. Chen
D. S. Griffin
J. F. Grubb
M. H. Jawad
S. Krishnamurthy
R. W. Mikitka
C. R. Thomas
M. Wadkinson
M. Katcher, *Contributing Member*

Subgroup on Ferrous Specifications (BPV II)

A. Appleton, *Chair*
K. M. Hottle, *Vice Chair*
C. Hyde, *Secretary*
H. Chen
B. M. Dingman
M. J. Dosdourian
O. Elkadim
D. Fialkowski
M. Gold
T. Graham
J. M. Grocki
J. F. Grubb
J. Gundlach
D. S. Janikowski
L. J. Lavezzi
S. G. Lee
W. C. Mack
A. S. Melilli
K. E. Orie
D. Poweleit
J. Shick
E. Upitis
R. Zawierucha
J. D. Fritz, *Contributing Member*

Copyrighted material licensed to Fermi National Laboratory by Clarivate Analytics (US) LLC, subscriptions.techstreet.com, downloaded on 2020-09-23 17:45:20 +0000 by Fermi National Laboratory User.
No further reproduction or distribution is permitted.

Subgroup on International Material Specifications (BPV II)

M. Ishikawa, *Chair*
A. R. Nywening, *Vice Chair*
B. Mruk, *Secretary*
A. Chaudouet
P. Chavdarov
H. Chen
A. F. Garbolevsky
D. O. Henry
W. M. Lundy
E. Upitis
F. Zeller
O. Oldani, *Delegate*
D. A. Canonico, *Contributing Member*
H. Lorenz, *Contributing Member*
T. F. Miskell, *Contributing Member*

Subgroup on Nonferrous Alloys (BPV II)

E. Shapiro, *Chair*
S. Yem, *Vice Chair*
J. Robertson, *Secretary*
R. Beldyk
J. Calland
J. M. Downs
J. F. Grubb
D. Maitra
J. A. McMaster
D. W. Rahoi
W. Ren
R. C. Sutherlin
J. Weritz
R. Wright
D. B. Denis, *Contributing Member*
M. Katcher, *Contributing Member*
D. T. Peters, *Contributing Member*

Subgroup on Physical Properties (BPV II)

J. F. Grubb, *Chair*
G. Aurioles, Sr.
D. Chandiramani
P. Chavdarov
H. Eshraghi
B. F. Hantz
R. D. Jones
P. K. Lam
S. Neilsen
D. W. Rahoi
P. K. Rai
E. Shapiro
M. S. Shelton
D. K. Verma
S. Yem
H. D. Bushfield, *Contributing Member*
D. B. Denis, *Contributing Member*

Subgroup on Strength, Ferrous Alloys (BPV II)

M. J. Slater, *Chair*
S. W. Knowles, *Vice Chair*
D. A. Canonico
A. Di Rienzo
J. R. Foulds
J. A. Hall
J. F. Henry
F. Masuyama
T. Ono
M. Ortolani
D. W. Rahoi
M. S. Shelton
J. M. Tanzosh
R. G. Young
F. Zeller
F. Abe, *Contributing Member*
M. Gold, *Contributing Member*
M. Nair, *Contributing Member*
B. W. Roberts, *Contributing Member*

Subgroup on Strength of Weldments (BPV II & BPV IX)

G. W. Galanes, *Chair*
K. L. Hayes, *Vice Chair*
S. H. Bowes
K. K. Coleman
M. Denault
P. D. Flenner
J. R. Foulds
D. W. Gandy
M. Ghahremani
J. F. Henry
E. Liebl
W. F. Newell, Jr.
J. Penso
D. W. Rahoi
B. W. Roberts
W. J. Sperko
J. P. Swezy, Jr.
J. M. Tanzosh
M. Gold, *Contributing Member*
J. J. Sanchez-Hanton, *Contributing Member*

Working Group on Materials Database (BPV II)

J. F. Henry, *Chair*
C. E. O'Brien, *Staff Secretary*
F. Abe
J. R. Foulds
M. J. Slater
R. C. Sutherlin
D. Andrei, *Contributing Member*
J. L. Arnold, *Contributing Member*
J. Grimes, *Contributing Member*
W. Hoffelner, *Contributing Member*
D. T. Peters, *Contributing Member*
W. Ren, *Contributing Member*
B. W. Roberts, *Contributing Member*
R. W. Swindeman, *Contributing Member*

Working Group on Creep Strength Enhanced Ferritic Steels (BPV II)

J. F. Henry, *Chair*
M. Ortolani, *Vice Chair*
J. A. Siefert, *Secretary*
S. H. Bowes
D. A. Canonico
K. K. Coleman
P. D. Flenner
J. R. Foulds
G. W. Galanes
M. Lang
F. Masuyama
T. Melfi
W. F. Newell, Jr.
J. Parker
J. J. Sanchez-Hanton
W. J. Sperko
J. M. Tanzosh
R. H. Worthington
R. G. Young
F. Zeller
F. Abe, *Contributing Member*
G. Cumino, *Contributing Member*
B. W. Roberts, *Contributing Member*
R. W. Swindeman, *Contributing Member*

Working Group on Data Analysis (BPV II)

J. F. Grubb, *Chair*
J. R. Foulds
J. F. Henry
F. Masuyama
M. Ortolani
W. Ren
M. Subanovic
M. J. Swindeman
F. Abe, *Contributing Member*
M. Gold, *Contributing Member*
W. Hoffelner, *Contributing Member*
M. Katcher, *Contributing Member*
D. T. Peters, *Contributing Member*
B. W. Roberts, *Contributing Member*
R. W. Swindeman, *Contributing Member*

China International Working Group (BPV II)

A. T. Xu, *Secretary*
W. Fang
Q. C. Feng
S. Huo
F. Kong
H. Li
J. Li
S. Li
Z. Rongcan
S. Tan
C. Wang
J. Wang
Q.-J. Wang
X. Wang
F. Yang
G. Yang
H.-C. Yang
J. Yang
R. Ye
L. Yin
D. Zhang
H. Zhang
X.-H. Zhang
Yingkai Zhang
Yong Zhang
Q. Zhao
S. Zhao

Copyrighted material licensed to Fermi National Laboratory by Clarivate Analytics (US) LLC, subscriptions.techstreet.com, downloaded on 2020-09-23 17:45:20 +0000 by Fermi National Laboratory User.
No further reproduction or distribution is permitted.

COMMITTEE ON CONSTRUCTION OF NUCLEAR FACILITY COMPONENTS (BPV III)

R. S. Hill III, *Chair*
R. B. Keating, *Vice Chair*
J. C. Minichiello, *Vice Chair*
A. Byk, *Staff Secretary*
T. M. Adams
A. Appleton
R. W. Barnes
W. H. Borter
C. W. Bruny
T. D. Burchell
R. P. Deubler
P. R. Donavin
A. C. Eberhardt
J. V. Gardiner
J. Grimm
S. Hunter
R. M. Jessee
R. I. Jetter
C. C. Kim
G. H. Koo
V. Kostarev
M. A. Lockwood
K. A. Manoly
D. E. Matthews
M. N. Mitchell
M. Morishita
D. K. Morton
T. Nagata
J. E. Nestell
E. L. Pleins
R. F. Reedy, Sr.
I. Saito
S. Sham
G. J. Solovey
W. K. Sowder, Jr.
W. J. Sperko
J. P. Tucker
C. S. Withers
H.-T. Wang, *Delegate*
C. T. Smith, *Contributing Member*
M. Zhou, *Contributing Member*
E. B. Branch, *Honorary Member*
G. D. Cooper, *Honorary Member*
D. F. Landers, *Honorary Member*
R. A. Moen, *Honorary Member*
C. J. Pieper, *Honorary Member*
K. R. Wichman, *Honorary Member*

Executive Committee (BPV III)

R. S. Hill III, *Chair*
A. Byk, *Staff Secretary*
T. M. Adams
C. W. Bruny
P. R. Donavin
J. V. Gardiner
J. Grimm
R. B. Keating
J. C. Minichiello
J. A. Munshi
J. E. Nestell
S. Sham
G. J. Solovey
W. K. Sowder, Jr.

Subcommittee on Design (BPV III)

P. R. Donavin, *Chair*
T. M. Adams, *Vice Chair*
R. L. Bratton
C. W. Bruny
R. P. Deubler
M. A. Gray
S. Horowitz
R. I. Jetter
R. B. Keating
K. A. Manoly
R. J. Masterson
D. E. Matthews
S. McKillop
M. N. Mitchell
W. J. O'Donnell, Sr.
S. Sham
J. P. Tucker
W. F. Weitze
T. Yamazaki
J. Yang
R. S. Hill III, *Contributing Member*
G. L. Hollinger, *Contributing Member*
M. H. Jawad, *Contributing Member*
K. Wright, *Contributing Member*

Subgroup on Component Design (SC-D) (BPV III)

T. M. Adams, *Chair*
R. B. Keating, *Vice Chair*
S. Pellet, *Secretary*
D. J. Ammerman
G. A. Antaki
S. Asada
J. F. Ball
C. Basavaraju
D. Chowdhury
R. P. Deubler
P. Hirschberg
M. Kassar
O.-S. Kim
H. Kobayashi
K. A. Manoly
R. J. Masterson
D. E. Matthews
J. C. Minichiello
D. K. Morton
T. M. Musto
T. Nagata
I. Saito
G. C. Slagis
J. R. Stinson
G. Z. Tokarski
J. P. Tucker
P. Vock
C. Wilson
J. Yang
C. W. Bruny, *Contributing Member*
A. A. Dermenjian, *Contributing Member*
K. R. Wichman, *Honorary Member*

Working Group on Core Support Structures (SG-CD) (BPV III)

J. Yang, *Chair*
D. Keck, *Secretary*
L. C. Hartless
J. F. Kielb
T. Liszkai
H. S. Mehta
M. Nakajima
M. D. Snyder
R. Vollmer
T. M. Wiger
Y. Wong
R. Z. Ziegler

Working Group on Design of Division 3 Containment Systems (SG-CD) (BPV III)

D. J. Ammerman, *Chair*
G. Bjorkman
V. Broz
S. Horowitz
S. Klein
D. W. Lewis
J. C. Minichiello
D. K. Morton
X. Zhai
X. Zhang
D. Dunn, *Alternate*
I. D. McInnes, *Contributing Member*
H. P. Shrivastava, *Contributing Member*

Working Group on HDPE Design of Components (SG-CD) (BPV III)

T. M. Musto, *Chair*
J. Ossmann, *Secretary*
T. M. Adams
T. A. Bacon
M. Brandes
S. Choi
J. R. Hebeisen
P. Krishnaswamy
K. A. Manoly
M. Martin
J. C. Minichiello
D. P. Munson
F. J. Schaaf, Jr.
R. Stakenborghs
J. Wright
M. T. Audrain, *Alternate*
D. Burwell, *Contributing Member*

Copyrighted material licensed to Fermi National Laboratory by Clarivate Analytics (US) LLC, subscriptions.techstreet.com, downloaded on 2020-09-23 17:45:20 +0000 by Fermi National Laboratory User.
No further reproduction or distribution is permitted.

Working Group on Piping (SG-CD) (BPV III)

G. A. Antaki, *Chair*
G. Z. Tokarski, *Secretary*
T. M. Adams
T. A. Bacon
C. Basavaraju
J. Catalano
F. Claeys
C. M. Faidy
R. G. Gilada
N. M. Graham
M. A. Gray
R. J. Gurdal
R. W. Haupt
A. Hirano
P. Hirschberg
M. Kassar
J. Kawahata
R. B. Keating
V. Kostarev
D. Lieb
T. B. Littleton
J. F. McCabe
J. C. Minichiello
I.-K. Nam
G. C. Slagis
N. C. Sutherland
C.-I. Wu
Y. Liu, *Contributing Member*
A. N. Nguyen, *Contributing Member*
M. S. Sills, *Contributing Member*
E. A. Wais, *Contributing Member*

Working Group on Pressure Relief (SG-CD) (BPV III)

J. F. Ball, *Chair*
J. W. Dickson
S. Jones
R. Krithivasan
R. Lack
K. R. May
D. Miller
T. Patel
K. Shores
I. H. Tseng
J. Yu
N. J. Hansing, *Alternate*
B. J. Yonsky, *Alternate*
S. T. French, *Contributing Member*
D. B. Ross, *Contributing Member*

Working Group on Pumps (SG-CD) (BPV III)

D. Chowdhury, *Chair*
J. V. Gregg, Jr., *Secretary*
X. Di
M. D. Eftychiou
C. Gabhart
J. Kikushima
R. Klein
R. Ladefian
W. Lienau
K. J. Noel
R. A. Patrick
J. Sulley
A. G. Washburn
Y. Wong

Working Group on Supports (SG-CD) (BPV III)

J. R. Stinson, *Chair*
U. S. Bandyopadhyay, *Secretary*
K. Avrithi
T. H. Baker
F. J. Birch
R. P. Deubler
N. M. Graham
R. J. Masterson
S. Pellet
I. Saito
C. Stirzel
G. Z. Tokarski
A. Tsirigotis
L. Vandership
P. Wiseman
J. Huang, *Alternate*

Working Group on Valves (SG-CD) (BPV III)

P. Vock, *Chair*
S. Jones, *Secretary*
M. C. Buckley
R. Farrell
G. A. Jolly
J. Lambin
T. Lippucci
C. A. Mizer
H. O'Brien
J. O'Callaghan
K. E. Reid II
J. Sulley
I. H. Tseng
J. P. Tucker
N. J. Hansing, *Alternate*

Working Group on Vessels (SG-CD) (BPV III)

D. E. Matthews, *Chair*
S. Willoughby, *Secretary*
J. Arthur
C. Basavaraju
M. Kassar
R. B. Keating
D. Keck
J. I. Kim
O.-S. Kim
T. Mitsuhashi
D. Murphy
T. J. Schriefer
M. C. Scott
P. K. Shah
J. Shupert
C. Turylo
D. Vlaicu
C. Wilson
T. Yamazaki
R. Z. Ziegler
B. Basu, *Contributing Member*
A. Kalnins, *Contributing Member*
W. F. Weitze, *Contributing Member*

Subgroup on Design Methods (SC-D) (BPV III)

C. W. Bruny, *Chair*
P. R. Donavin, *Vice Chair*
S. McKillop, *Secretary*
K. Avrithi
L. Davies
S. R. Gosselin
M. A. Gray
J. V. Gregg, Jr.
H. T. Harrison III
K. Hsu
D. Keck
J. I. Kim
M. N. Mitchell
W. J. O'Donnell, Sr.
W. D. Reinhardt
P. Smith
S. D. Snow
R. Vollmer
W. F. Weitze
K. Wright
T. M. Adams, *Contributing Member*

Working Group on Design Methodology (SG-DM) (BPV III)

S. McKillop, *Chair*
R. Vollmer, *Secretary*
K. Avrithi
C. Basavaraju
D. L. Caldwell
C. M. Faidy
R. Farrell
H. T. Harrison III
C. F. Heberling II
P. Hirschberg
M. Kassar
R. B. Keating
J. I. Kim
H. Kobayashi
T. Liszkai
J. F. McCabe
S. Ranganath
W. D. Reinhardt
P. K. Shah
S. D. Snow
S. Wang
W. F. Weitze
J. Wen
T. M. Wiger
K. Wright
J. Yang
R. D. Blevins, *Contributing Member*
M. R. Breach, *Contributing Member*

Working Group on Environmental Effects (SG-DM) (BPV III)

L. Davies, *Chair*
B. D. Frew, *Secretary*
P. J. Dobson
J. I. Kim
J. E. Nestell
M. Osterfoss
T. J. Schriefer
I. H. Tseng

Working Group on Environmental Fatigue Evaluation Methods (SG-DM) (BPV III)

M. A. Gray, *Chair*
W. F. Weitze, *Secretary*
T. M. Adams
S. Asada
K. Avrithi
R. C. Cipolla
T. M. Damiani
C. M. Faidy
T. D. Gilman
S. R. Gosselin
Y. He
P. Hirschberg
H. S. Mehta
T. Metais
J.-S. Park
B. Pellereau
I. Saito
D. Vlaicu
K. Wang
K. Wright
R. Z. Ziegler

Copyrighted material licensed to Fermi National Laboratory by Clarivate Analytics (US) LLC, subscriptions.techstreet.com, downloaded on 2020-09-23 17:45:20 +0000 by Fermi National Laboratory User.
No further reproduction or distribution is permitted.

Working Group on Fatigue Strength (SG-DM) (BPV III)

P. R. Donavin, *Chair*
M. S. Shelton, *Secretary*
T. M. Damiani
C. M. Faidy
P. Gill
S. R. Gosselin
R. J. Gurdal
C. F. Heberling II
C. E. Hinnant
P. Hirschberg
K. Hsu
S. H. Kleinsmith
S. Majumdar
S. N. Malik
H. S. Mehta
S. Mohanty
S. Ranganath
A. Tsirigotis
D. Dewees, *Contributing Member*
W. J. O'Donnell, Sr., *Contributing Member*
K. Wright, *Contributing Member*

Working Group on Graphite and Composite Design (SG-DM) (BPV III)

M. N. Mitchell, *Chair*
T. D. Burchell, *Secretary*
A. Appleton
S.-H. Chi
W. J. Geringer
S. T. Gonczy
M. G. Jenkins
Y. Katoh
J. Ossmann
W. Windes
A. Yeshnik
S. Yu
G. L. Zeng
N. McMurray, *Alternate*

Working Group on Probabilistic Methods in Design (SG-DM) (BPV III)

M. Golliet, *Chair*
T. Asayama
K. Avrithi
G. Brouette
J. Hakii
D. O. Henry
R. S. Hill III
M. Morishita
P. J. O'Regan
I. Saito

Special Working Group on Computational Modeling for Explicit Dynamics (SG-DM) (BPV III)

G. Bjorkman, *Chair*
D. J. Ammerman, *Vice Chair*
V. Broz, *Secretary*
M. R. Breach
J. M. Jordan
S. Kuehner
D. Molitoris
W. D. Reinhardt
P. Y.-K. Shih
S. D. Snow
C.-F. Tso
M. C. Yaksh
U. Zencker
A. Rigato, *Alternate*

Subgroup on Elevated Temperature Design (SC-D) (BPV III)

S. Sham, *Chair*
T. Asayama
C. Becht IV
F. W. Brust
P. Carter
M. E. Cohen
B. F. Hantz
M. H. Jawad
R. I. Jetter
K. Kimura
G. H. Koo
T. Le
J. E. Nestell
R. Wright
A. B. Hull, *Alternate*
D. S. Griffin, *Contributing Member*
S. Majumdar, *Contributing Member*
D. L. Marriott, *Contributing Member*
W. J. O'Donnell, Sr., *Contributing Member*
R. W. Swindeman, *Contributing Member*

Working Group on Allowable Stress Criteria (SG-ETD) (BPV III)

R. Wright, *Chair*
M. J. Swindeman, *Secretary*
C. J. Johns
K. Kimura
T. Le
D. Maitra
M. McMurtrey
J. E. Nestell
W. Ren
S. Sham
X. Wei
S. N. Malik, *Alternate*
J. R. Foulds, *Contributing Member*
R. W. Swindeman, *Contributing Member*

Working Group on Analysis Methods (SG-ETD) (BPV III)

P. Carter, *Chair*
M. J. Swindeman, *Secretary*
M. E. Cohen
R. I. Jetter
T. Le
M. C. Messner
S. Sham
X. Wei
A. Tsirigotis, *Alternate*
S. Krishnamurthy, *Contributing Member*

Working Group on Creep-Fatigue and Negligible Creep (SG-ETD) (BPV III)

T. Asayama, *Chair*
F. W. Brust
P. Carter
M. E. Cohen
R. I. Jetter
G. H. Koo
T. Le
B.-L. Lyow
M. McMurtrey
M. C. Messner
H. Qian
S. Sham
Y. Wang
X. Wei
N. McMurray, *Alternate*

Working Group on Elevated Temperature Construction (SG-ETD) (BPV III)

A. Mann, *Chair*
C. Nadarajah, *Secretary*
D. I. Anderson
D. Dewees
B. F. Hantz
M. H. Jawad
R. I. Jetter
S. Krishnamurthy
T. Le
M. N. Mitchell
P. Prueter
M. J. Swindeman
N. McMurray, *Alternate*
J. P. Glaspie, *Contributing Member*
D. L. Marriott, *Contributing Member*
B. J. Mollitor, *Contributing Member*

Working Group on High Temperature Flaw Evaluation (SG-ETD) (BPV III)

F. W. Brust, *Chair*
P. Carter
S. Kalyanam
T. Le
M. C. Messner
H. Qian
P. J. Rush
D.-J. Shim
X. Wei
S. X. Xu
N. McMurray, *Alternate*

Special Working Group on Inelastic Analysis Methods (SG-ETD) (BPV III)

M. C. Messner, *Chair*
S. X. Xu, *Secretary*
R. W. Barnes
J. A. Blanco
T. Hassan
G. H. Koo
B.-L. Lyow
S. Sham
M. J. Swindeman
X. Wei
G. L. Zeng

Copyrighted material licensed to Fermi National Laboratory by Clarivate Analytics (US) LLC, subscriptions.techstreet.com, downloaded on 2020-09-23 17:45:20 +0000 by Fermi National Laboratory User.
No further reproduction or distribution is permitted.

Subgroup on General Requirements (BPV III)

J. V. Gardiner, *Chair*
J. Rogers, *Secretary*
V. Apostolescu
A. Appleton
S. Bell
J. R. Berry
G. Brouette
J. W. Highlands
E. V. Imbro
K. A. Kavanagh
Y.-S. Kim
B. McGlone
E. C. Renaud
T. N. Rezk
D. J. Roszman
W. K. Sowder, Jr.
R. Spuhl
G. E. Szabatura
D. M. Vickery
C. S. Withers
J. DeKleine, *Contributing Member*
H. Michael, *Contributing Member*
C. T. Smith, *Contributing Member*

Working Group on Duties and Responsibilities (SG-GR) (BPV III)

S. Bell, *Chair*
N. DeSantis, *Secretary*
J. R. Berry
P. J. Coco
Y. Diaz-Castillo
J. V. Gardiner
E. V. Imbro
K. A. Kavanagh
D. J. Roszman
B. S. Sandhu
J. L. Williams
J. DeKleine, *Contributing Member*

Working Group on Quality Assurance, Certification, and Stamping (SG-GR) (BPV III)

B. McGlone, *Chair*
J. Grimm, *Secretary*
V. Apostolescu
A. Appleton
G. Brouette
O. Elkadim
S. M. Goodwin
J. Harris
J. W. Highlands
K. A. Kavanagh
Y.-S. Kim
D. T. Meisch
R. B. Patel
E. C. Renaud
T. N. Rezk
J. Rogers
W. K. Sowder, Jr.
R. Spuhl
J. F. Strunk
G. E. Szabatura
D. M. Vickery
C. S. Withers
C. A. Spletter, *Contributing Member*

Special Working Group on General Requirements Consolidation (SG-GR) (BPV III)

J. V. Gardiner, *Chair*
C. T. Smith, *Vice Chair*
S. Bell
M. B. Cusick
Y. Diaz-Castillo
J. Grimm
J. M. Lyons
B. McGlone
R. B. Patel
E. C. Renaud
T. N. Rezk
J. Rogers
D. J. Roszman
B. S. Sandhu
G. J. Solovey
R. Spuhl
G. E. Szabatura
J. L. Williams
C. S. Withers
S. F. Harrison, Jr., *Contributing Member*

Working Group on General Requirements for Graphite and Ceramic Composite Core Components and Assemblies (SG-GR) (BPV III)

A. Appleton, *Chair*
W. J. Geringer, *Secretary*
J. R. Berry
T. D. Burchell
M. N. Mitchell
E. C. Renaud
W. Windes
A. Yeshnik
N. McMurray, *Alternate*

Subgroup on Materials, Fabrication, and Examination (BPV III)

J. Grimm, *Chair*
B. D. Frew, *Vice Chair*
S. Hunter, *Secretary*
W. H. Borter
T. D. Burchell
S. Cho
P. J. Coco
R. H. Davis
G. B. Georgiev
S. E. Gingrich
M. Golliet
L. S. Harbison
R. M. Jessee
J. Johnston, Jr.
C. C. Kim
M. Lashley
T. Melfi
I.-K. Nam
J. Ossmann
J. E. O'Sullivan
M. C. Scott
W. J. Sperko
J. R. Stinson
J. F. Strunk
W. Windes
R. Wright
S. Yee
H. Michael, *Delegate*
R. W. Barnes, *Contributing Member*
G. R. Cannell, *Contributing Member*
D. B. Denis, *Contributing Member*

Working Group on Graphite and Composite Materials (SG-MFE) (BPV III)

T. D. Burchell, *Chair*
M. N. Mitchell, *Secretary*
A. Appleton
R. L. Bratton
S. R. Cadell
S.-H. Chi
A. Covac
S. W. Doms
S. F. Duffy
W. J. Geringer
S. T. Gonzcy
M. G. Jenkins
Y. Katoh
J. Ossmann
M. Roemmler
N. Salstrom
T. Shibata
W. Windes
A. Yeshnik
S. Yu
G. L. Zeng
N. McMurray, *Alternate*

Working Group on HDPE Materials (SG-MFE) (BPV III)

G. Brouette, *Chair*
M. A. Martin, *Secretary*
W. H. Borter
M. C. Buckley
M. Golliet
J. Hakii
J. Johnston, Jr.
P. Krishnaswamy
D. P. Munson
T. M. Musto
S. Patterson
S. Schuessler
R. Stakenborghs
M. Troughton
J. Wright
B. Hauger, *Contributing Member*

Joint ACI-ASME Committee on Concrete Components for Nuclear Service (BPV III)

J. A. Munshi, *Chair*
J. McLean, *Vice Chair*
J. Cassamassino, *Staff Secretary*
C. J. Bang
L. J. Colarusso
A. C. Eberhardt
F. Farzam
P. S. Ghosal
B. D. Hovis
T. C. Inman
C. Jones
O. Jovall
T. Kang
N.-H. Lee
T. Muraki
N. Orbovic
J. F. Strunk
G. Thomas
T. Tonyan
S. Wang
J. F. Artuso, *Contributing Member*
S. Bae, *Contributing Member*
J.-B. Domage, *Contributing Member*
B. B. Scott, *Contributing Member*
M. R. Senecal, *Contributing Member*
Z. Shang, *Contributing Member*
M. Sircar, *Contributing Member*
C. T. Smith, *Contributing Member*

Copyrighted material licensed to Fermi National Laboratory by Clarivate Analytics (US) LLC, subscriptions.techstreet.com, downloaded on 2020-09-23 17:45:20 +0000 by Fermi National Laboratory User.
No further reproduction or distribution is permitted.

Working Group on Design (BPV III-2)

N.-H. Lee, *Chair*
S. Wang, *Vice Chair*
M. Allam
S. Bae
L. J. Colarusso
A. C. Eberhardt
F. Farzam
P. S. Ghosal
B. D. Hovis
T. C. Inman
C. Jones
O. Jovall
J. A. Munshi
T. Muraki
G. Thomas
M. Diaz, *Contributing Member*
A. Istar, *Contributing Member*
S.-Y. Kim, *Contributing Member*
J. Kwon, *Contributing Member*
B. R. Laskewitz, *Contributing Member*
B. B. Scott, *Contributing Member*
Z. Shang, *Contributing Member*
M. Shin, *Contributing Member*
M. Sircar, *Contributing Member*

Working Group on Materials, Fabrication, and Examination (BPV III-2)

T. Tonyan, *Chair*
A. Eberhardt, *Vice Chair*
M. Allam
C. J. Bang
B. Birch
J.-B. Domage
P. S. Ghosal
C. Jones
T. Kang
N.-H. Lee
Z. Shang
J. F. Strunk
I. Zivanovic
J. F. Artuso, *Contributing Member*
B. B. Scott, *Contributing Member*

Special Working Group on Modernization (BPV III-2)

N. Orbovic, *Chair*
J. McLean, *Vice Chair*
A. Adediran
O. Jovall
N. Stoeva
S. Wang
I. Zivanovic
J.-B. Domage, *Contributing Member*
F. Lin, *Contributing Member*
M. A. Ugalde, *Contributing Member*

Subgroup on Containment Systems for Spent Nuclear Fuel and High-Level Radioactive Material (BPV III)

G. J. Solovey, *Chair*
D. J. Ammerman, *Vice Chair*
G. Bjorkman
V. Broz
S. Horowitz
S. Klein
D. W. Lewis
D. K. Morton
E. L. Pleins
J. Wellwood
X. J. Zhai
D. Dunn, *Alternate*
W. H. Borter, *Contributing Member*
P. E. McConnell, *Contributing Member*
N. M. Simpson, *Contributing Member*
R. H. Smith, *Contributing Member*

Subgroup on Fusion Energy Devices (BPV III)

W. K. Sowder, Jr., *Chair*
D. Andrei, *Staff Secretary*
D. J. Roszman, *Secretary*
M. Bashir
L. C. Cadwallader
B. R. Doshi
G. Holtmeier
K. A. Kavanagh
K. Kim
I. Kimihiro
S. Lee
G. Li
X. Li
P. Mokaria
T. R. Muldoon
M. Porton
F. J. Schaaf, Jr.
P. Smith
Y. Song
M. Trosen
C. Waldon
I. J. Zatz
R. W. Barnes, *Contributing Member*

Working Group on General Requirements (BPV III-4)

D. J. Roszman, *Chair*
W. K. Sowder, Jr.

Working Group on In-Vessel Components (BPV III-4)

M. Bashir, *Chair*
Y. Carin
M. Kalsey

Working Group on Magnets (BPV III-4)

S. Lee, *Chair*
K. Kim, *Vice Chair*

Working Group on Materials (BPV III-4)

M. Porton, *Chair*
P. Mummery

Working Group on Vacuum Vessels (BPV III-4)

I. Kimihiro, *Chair*
L. C. Cadwallader
B. R. Doshi
Q. Shijun
Y. Song

Subgroup on High Temperature Reactors (BPV III)

J. E. Nestell, *Chair*
N. Broom
T. D. Burchell
M. E. Cohen
R. I. Jetter
G. H. Koo
D. K. Morton
S. Sham
W. Windes
A. Yeshnik
G. L. Zeng
N. McMurray, *Alternate*
X. Li, *Contributing Member*
M. Morishita, *Contributing Member*
L. Shi, *Contributing Member*

Working Group on High Temperature Gas-Cooled Reactors (BPV III-5)

J. E. Nestell, *Chair*
N. Broom
T. D. Burchell
R. I. Jetter
Y. W. Kim
T. Le
D. K. Morton
S. Sham
G. L. Zeng
S. N. Malik, *Alternate*
X. Li, *Contributing Member*
L. Shi, *Contributing Member*

Working Group on High Temperature Liquid-Cooled Reactors (BPV III-5)

S. Sham, *Chair*
M. Arcaro
T. Asayama
R. W. Barnes
P. Carter
M. E. Cohen
A. B. Hull
R. I. Jetter
G. H. Koo
T. Le
J. E. Nestell
X. Wei
C. Moyer, *Alternate*
S. Majumdar, *Contributing Member*
M. Morishita, *Contributing Member*
G. Wu, *Contributing Member*

Copyrighted material licensed to Fermi National Laboratory by Clarivate Analytics (US) LLC, subscriptions.techstreet.com, downloaded on 2020-09-23 17:45:20 +0000 by Fermi National Laboratory User.
No further reproduction or distribution is permitted.

Argentina International Working Group (BPV III)

J. Fernández, *Chair*
A. Politi, *Vice Chair*
O. Martinez, *Staff Secretary*
A. Gomez, *Secretary*
A. Acrogliano
W. Agrelo
G. O. Anteri
M. Anticoli
C. A. Araya
J. P. Balbiani
A. A. Betervide
D. O. Bordato
G. Bourguigne
M. L. Cappella
A. Claus
R. G. Cocco
A. Coleff
A. J. Dall'Osto
L. M. De Barberis
D. P. Delfino
D. N. Dell'Erba
F. G. Diez
A. Dominguez
S. A. Echeverria
E. P. Fresquet
M. M. Gamizo
I. M. Guerreiro
R. S. Hill III
I. A. Knorr
M. F. Liendo
L. R. Miño
J. Monte
R. L. Morard
A. E. Pastor
E. Pizzichini
J. L. Racamato
H. C. Sanzi
G. J. Scian
G. G. Sebastian
M. E. Szarko
P. N. Torano
A. Turrin
O. A. Verastegui
M. D. Vigliano
P. Yamamoto
M. Zunino

China International Working Group (BPV III)

J. Yan, *Chair*
W. Tang, *Vice Chair*
Y. He, *Secretary*
L. Guo
Y. Jing
D. Kang
Y. Li
B. Liang
H. Lin
S. Liu
W. Liu
J. Ma
K. Mao
D. E. Matthews
W. Pei
G. Sun
Z. Sun
G. Tang
L. Ting
Y. Tu
Y. Wang
H. Wu
X. Wu
S. Xue
Z. Yin
G. Zhang
W. Zhang
W. Zhao
Y. Zhong
Z. Zhong

German International Working Group (BPV III)

J. Wendt, *Chair*
D. Koelbl, *Vice Chair*
R. Gersinska, *Secretary*
H.-R. Bath
P. R. Donavin
R. Döring
A. Huber
R. E. Hueggenberg
C. Huttner
E. Iacopetta
M. H. Koeppen
C. Kuschke
H.-W. Lange
T. Ludwig
X. Pitoiset
M. Reichert
G. Roos
J. Rudolph
H. Schau
L. Sybert
R. Trieglaff
F. Wille
S. Zickler

India International Working Group (BPV III)

R. N. Sen, *Chair*
S. B. Parkash, *Vice Chair*
A. D. Bagdare, *Secretary*
S. Aithal
H. Dalal
S. Kovalai
D. Kulkarni
R. Kumar
E. I. Pleins
M. Ponnusamy
K. R. Shah
B. K. Sreedhar

Korea International Working Group (BPV III)

G. H. Koo, *Chair*
S. S. Hwang, *Vice Chair*
O.-S. Kim, *Secretary*
H. S. Byun
S. Cho
G.-S. Choi
S. Choi
J. Y. Hong
N.-S. Huh
J.-K. Hwang
C. Jang
I. I. Jeong
H. J. Kim
J.-I. Kim
J.-S. Kim
K. Kim
M.-W. Kim
S.-S. Kim
Y.-B. Kim
Y.-S. Kim
D. Kwon
B. Lee
D. Lee
Sanghoon Lee
Sangil Lee
S.-G. Lee
H. Lim
I.-K. Nam
B. Noh
C.-K. Oh
C. Park
H. Park
J.-S. Park
Y. S. Pyun
T. Shin
S. Song
W. J. Sperko
J. S. Yang
O. Yoo

Special Working Group on Editing and Review (BPV III)

D. E. Matthews, *Chair*
R. L. Bratton
R. P. Deubler
A. C. Eberhardt
S. Horowitz
J. C. Minichiello
R. F. Reedy, Sr.
C. Wilson

Special Working Group on HDPE Stakeholders (BPV III)

M. Brandes, *Chair*
S. Patterson, *Secretary*
T. M. Adams
S. Choi
C. M. Faidy
M. Golliet
R. M. Jessee
J. Johnston, Jr.
M. Lashley
K. A. Manoly
D. P. Munson
T. M. Musto
J. E. O'Sullivan
V. Rohatgi
F. J. Schaaf, Jr.
R. Stakenborghs
M. Troughton
J. Wright
D. Burwell, *Contributing Member*

Special Working Group on Honors and Awards (BPV III)

R. M. Jessee, *Chair*
A. Appleton
R. W. Barnes
D. E. Matthews
J. C. Minichiello

Special Working Group on Industry Experience for New Plants (BPV III & BPV XI)

J. T. Lindberg, *Chair*
J. Ossmann, *Chair*
M. C. Buckley, *Secretary*
A. Cardillo
T. L. Chan
P. J. Hennessey
D. O. Henry
J. Honcharik
C. G. Kim
O.-S. Kim
K. Matsunaga
D. E. Matthews
R. E. McLaughlin
D. W. Sandusky
T. Tsuruta
R. M. Wilson
S. M. Yee
A. Tsirigotis, *Alternate*

Copyrighted material licensed to Fermi National Laboratory by Clarivate Analytics (US) LLC, subscriptions.techstreet.com, downloaded on 2020-09-23 17:45:20 +0000 by Fermi National Laboratory User.
No further reproduction or distribution is permitted.

Special Working Group on International Meetings (BPV III)

D. E. Matthews, *Chair*
A. Byk, *Staff Secretary*
R. W. Barnes
T. D. Burchell
R. L. Crane
P. R. Donavin
R. S. Hill III
M. N. Mitchell
E. L. Pleins
R. F. Reedy, Sr.
C. A. Sanna
W. J. Sperko

Special Working Group on New Plant Construction Issues (BPV III)

E. L. Pleins, *Chair*
M. C. Scott, *Secretary*
A. Cardillo
P. J. Coco
J. Honcharik
E. V. Imbro
O.-S. Kim
M. Kris
J. C. Minichiello
D. W. Sandusky
R. R. Stevenson
M. L. Wilson
H. Xu
J. Yan
N. J. Hansing, *Alternate*
A. Byk, *Contributing Member*

Special Working Group on Regulatory Interface (BPV III)

E. V. Imbro, *Chair*
P. Malouines, *Secretary*
S. Bell
A. Cardillo
P. J. Coco
J. Grimm
J. Honcharik
K. Matsunaga
D. E. Matthews
B. McGlone
A. T. Roberts III
R. R. Stevenson
M. L. Wilson
N. J. Hansing, *Alternate*

COMMITTEE ON HEATING BOILERS (BPV IV)

J. A. Hall, *Chair*
T. L. Bedeaux, *Vice Chair*
C. R. Ramcharran, *Staff Secretary*
B. Calderon
J. Calland
J. P. Chicoine
J. M. Downs
J. L. Kleiss
J. Klug
P. A. Molvie
R. D. Troutt
M. Wadkinson
R. V. Wielgoszinski
H. Michael, *Delegate*
D. Picart, *Delegate*
B. J. Iske, *Alternate*
A. Heino, *Contributing Member*
S. V. Voorhees, *Contributing Member*

Subgroup on Care and Operation of Heating Boilers (BPV IV)

R. D. Troutt, *Chair*
C. R. Ramcharran, *Staff Secretary*
B. Ahee
T. L. Bedeaux
J. Calland
J. M. Downs
J. A. Hall
J. L. Kleiss
P. A. Molvie
M. Wadkinson
C. Lasarte, *Contributing Member*

Subgroup on Cast Boilers (BPV IV)

J. P. Chicoine, *Chair*
C. R. Ramcharran, *Staff Secretary*
T. L. Bedeaux
J. M. Downs
J. A. Hall
J. L. Kleiss
M. Mengon

Subgroup on Materials (BPV IV)

M. Wadkinson, *Chair*
C. R. Ramcharran, *Staff Secretary*
L. Badziagowski
T. L. Bedeaux
J. Calland
J. M. Downs
J. A. Hall
B. J. Iske

Subgroup on Water Heaters (BPV IV)

J. Calland, *Chair*
C. R. Ramcharran, *Staff Secretary*
B. Ahee
L. Badziagowski
J. P. Chicoine
C. Dinic
B. J. Iske
J. L. Kleiss
P. A. Molvie
M. A. Taylor
T. E. Trant
R. D. Troutt

Subgroup on Welded Boilers (BPV IV)

P. A. Molvie, *Chair*
C. R. Ramcharran, *Staff Secretary*
B. Ahee
L. Badziagowski
T. L. Bedeaux
B. Calderon
J. Calland
C. Dinic
J. L. Kleiss
M. Mengon
R. D. Troutt
M. Wadkinson
R. V. Wielgoszinski

COMMITTEE ON NONDESTRUCTIVE EXAMINATION (BPV V)

G. W. Hembree, *Chair*
N. A. Finney, *Vice Chair*
C. R. Ramcharran, *Staff Secretary*
J. Bennett
P. L. Brown
M. A. Burns
N. Carter
C. Emslander
A. F. Garbolevsky
J. F. Halley
P. T. Hayes
S. A. Johnson
F. B. Kovacs
B. D. Laite
C. May
L. E. Mullins
A. B. Nagel
T. L. Plasek
F. J. Sattler
P. B. Shaw
C. Vorwald
G. M. Gatti, *Delegate*
X. Guiping, *Delegate*
S. J. Akrin, *Contributing Member*
J. E. Batey, *Contributing Member*
A. S. Birks, *Contributing Member*
N. Y. Faransso, *Contributing Member*
R. W. Kruzic, *Contributing Member*
H. C. Graber, *Honorary Member*
O. F. Hedden, *Honorary Member*
J. R. MacKay, *Honorary Member*
T. G. McCarty, *Honorary Member*

Executive Committee (BPV V)

N. A. Finney, *Chair*
G. W. Hembree, *Vice Chair*
C. R. Ramcharran, *Staff Secretary*
C. Emslander
S. A. Johnson
F. B. Kovacs
A. B. Nagel
C. Vorwald

Subgroup on General Requirements/Personnel Qualifications and Inquiries (BPV V)

C. Emslander, *Chair*
N. Carter, *Vice Chair*
J. Bennett
T. Clausing
N. A. Finney
G. W. Hembree
S. A. Johnson
F. B. Kovacs
K. Krueger
C. May
D. I. Morris
A. B. Nagel
S. J. Akrin, *Contributing Member*
J. E. Batey, *Contributing Member*
A. S. Birks, *Contributing Member*
N. Y. Faransso, *Contributing Member*
J. P. Swezy, Jr., *Contributing Member*

Copyrighted material licensed to Fermi National Laboratory by Clarivate Analytics (US) LLC, subscriptions.techstreet.com, downloaded on 2020-09-23 17:45:20 +0000 by Fermi National Laboratory User.
No further reproduction or distribution is permitted.

Subgroup on Surface Examination Methods (BPV V)

S. A. Johnson, *Chair*
C. May, *Vice Chair*
P. L. Brown
N. Carter
T. Clausing
N. Farenbaugh
N. A. Finney
J. F. Halley
K. Hayes
G. W. Hembree
B. D. Laite
L. E. Mullins
A. B. Nagel
F. J. Sattler
P. B. Shaw
M. Wolf
D. Woodward
G. M. Gatti, *Delegate*
S. J. Akrin, *Contributing Member*
J. E. Batey, *Contributing Member*
A. S. Birks, *Contributing Member*
N. Y. Faransso, *Contributing Member*
R. W. Kruzic, *Contributing Member*

Subgroup on Volumetric Methods (BPV V)

A. B. Nagel, *Chair*
C. May, *Vice Chair*
P. L. Brown
J. M. Davis
N. A. Finney
A. F. Garbolevsky
J. F. Halley
R. W. Hardy
P. T. Hayes
G. W. Hembree
S. A. Johnson
F. B. Kovacs
C. Magruder
L. E. Mullins
T. L. Plasek
F. J. Sattler
C. Vorwald
G. M. Gatti, *Delegate*
S. J. Akrin, *Contributing Member*
J. E. Batey, *Contributing Member*
N. Y. Faransso, *Contributing Member*
R. W. Kruzic, *Contributing Member*

Special Working Group on Advanced Ultrasonic Testing Technique (BPV V)

L. E. Mullins, *Chair*
K. Krueger, *Vice Chair*
D. Adkins
D. Bajula
N. A. Finney
J. L. Garner
J. F. Haley
P. T. Hayes
M. Lozev
C. Magruder
M. Sens

Special Working Group on Full Matrix Capture (FMC) Ultrasonic Testing (BPV V)

P. T. Hayes, *Chair*
K. Hayes, *Vice Chair*
D. Adkins
D. Bajula
D. Braconnier
J. Catty
B. Erne
S. Falter
N. A. Finney
J. L. Garner
R. T. Grotenhuis
J. F. Halley
G. W. Hembree
B. D. Laite
F. Laprise
M. Lozev
C. Magruder
F. Morrow
L. E. Mullins
A. B. Nagel
E. Peloquin
D. Richard
M. Sens
D. Tompkins
J. Vinyard
O. Volf
C. Wassink

Special Working Group on the Use of Unmanned Aerial Vehicles/ Systems for Inspection (BPV V)

G. W. Hembree, *Chair*
P. J. Coco, *Vice Chair*
L. Pulgarin, *Staff Secretary*
A. Bloye
T. Cinson
J. DiPalma
M. Ellis
S. Flash
R. T. Grotenhuis
K. Hayes
P. T. Hayes
R. Janowiak
C. May
L. E. Mullins
M. Orihuela
L. Petrosky
P. C. Prahl
J. Schroeter
K. Schupp
M. Sens
A. T. Taggart
R. Vayda
K. H. Kim, *Delegate*
R. J. Winn, *Delegate*
L. Zhang, *Delegate*
Q. Chen, *Contributing Member*
A. Cook, *Contributing Member*
A. E. Krauser, *Contributing Member*
X. Wen, *Contributing Member*
F. Wu, *Contributing Member*
Y. Yang, *Contributing Member*

Working Group on Acoustic Emissions (SG-VM) (BPV V)

N. Y. Faransso, *Chair*
S. R. Doctor, *Vice Chair*
J. Catty
V. F. Godinez-Azcuaga
R. K. Miller
M. A. Gonzalez, *Alternate*
J. E. Batey, *Contributing Member*

Working Group on Radiography (SG-VM) (BPV V)

C. Vorwald, *Chair*
F. B. Kovacs, *Vice Chair*
J. Anderson
P. L. Brown
C. Emslander
A. F. Garbolevsky
R. W. Hardy
G. W. Hembree
C. Johnson
S. A. Johnson
B. D. Laite
C. May
R. J. Mills
A. B. Nagel
T. L. Plasek
T. Vidimos
B. White
D. Woodward
S. J. Akrin, *Contributing Member*
J. E. Batey, *Contributing Member*
N. Y. Faransso, *Contributing Member*
R. W. Kruzic, *Contributing Member*

Working Group on Ultrasonics (SG-VM) (BPV V)

N. A. Finney, *Chair*
J. F. Halley, *Vice Chair*
D. Adkins
C. Brown
J. M. Davis
C. Emslander
P. T. Hayes
S. A. Johnson
K. Krueger
B. D. Laite
C. Magruder
C. May
L. E. Mullins
A. B. Nagel
K. Page
F. J. Sattler
D. Tompkins
D. Van Allen
J. Vinyard
C. Vorwald
N. Y. Faransso, *Contributing Member*
R. W. Kruzic, *Contributing Member*

Working Group on Guided Wave Ultrasonic Testing (SG-VM) (BPV V)

N. Y. Faransso, *Chair*
S. A. Johnson, *Vice Chair*
D. Alleyne
J. F. Halley
G. M. Light
P. Mudge
M. J. Quarry
J. Vanvelsor
J. E. Batey, *Contributing Member*

Copyrighted material licensed to Fermi National Laboratory by Clarivate Analytics (US) LLC, subscriptions.techstreet.com, downloaded on 2020-09-23 17:45:20 +0000 by Fermi National Laboratory User.
No further reproduction or distribution is permitted.

Italy International Working Group (BPV V)

P. L. Dinelli, *Chair*
A. Veroni, *Secretary*
T. Aldo
R. Bertolotti
F. Bresciani
G. Campos
N. Caputo
M. Colombo
F. Ferrarese
E. Ferrari
M. A. Grimoldi
G. Luoni
O. Oldani
U. Papponetti
P. Pedersoli
M. Zambon
G. Gobbi, *Contributing Member*
G. Pontiggia, *Contributing Member*

COMMITTEE ON PRESSURE VESSELS (BPV VIII)

R. J. Basile, *Chair*
S. C. Roberts, *Vice Chair*
E. Lawson, *Staff Secretary*
S. J. Rossi, *Staff Secretary*
G. Aurioles, Sr.
J. Cameron
A. Chaudouet
D. B. DeMichael
J. P. Glaspie
J. F. Grubb
B. F. Hantz
L. E. Hayden, Jr.
M. Kowalczyk
D. L. Kurle
M. D. Lower
R. Mahadeen
S. A. Marks
R. W. Mikitka
G. M. Mital
B. R. Morelock
T. P. Pastor
D. T. Peters
M. J. Pischke
M. D. Rana
G. B. Rawls, Jr.
F. L. Richter
C. D. Rodery
J. C. Sowinski
D. Srnic
D. B. Stewart
P. L. Sturgill
D. A. Swanson
J. P. Swezy, Jr.
S. Terada
E. Upitis
A. Viet
K. Xu
P. A. McGowan, *Delegate*
H. Michael, *Delegate*
K. Oyamada, *Delegate*
M. E. Papponetti, *Delegate*
X. Tang, *Delegate*
W. S. Jacobs, *Contributing Member*
G. G. Karcher, *Contributing Member*
K. T. Lau, *Contributing Member*
U. R. Miller, *Contributing Member*
K. Mokhtarian, *Contributing Member*
K. K. Tam, *Honorary Member*

Executive Committee (BPV VIII)

S. C. Roberts, *Chair*
S. J. Rossi, *Staff Secretary*
G. Aurioles, Sr.
R. J. Basile
M. Kowalczyk
D. L. Kurle
M. D. Lower
R. Mahadeen
S. A. Marks
G. M. Mital
D. A. Swanson
A. Viet

Subgroup on Design (BPV VIII)

D. A. Swanson, *Chair*
J. C. Sowinski, *Vice Chair*
M. Faulkner, *Secretary*
G. Aurioles, Sr.
S. R. Babka
O. A. Barsky
R. J. Basile
M. R. Breach
F. L. Brown
D. Chandiramani
B. F. Hantz
C. E. Hinnant
C. S. Hinson
M. H. Jawad
S. Krishnamurthy
D. L. Kurle
M. D. Lower
R. W. Mikitka
B. Millet
T. P. Pastor
M. D. Rana
G. B. Rawls, Jr.
S. C. Roberts
C. D. Rodery
T. G. Seipp
D. Srnic
S. Terada
J. Vattappilly
R. A. Whipple
K. Xu
K. Oyamada, *Delegate*
M. E. Papponetti, *Delegate*
W. S. Jacobs, *Contributing Member*
P. K. Lam, *Contributing Member*
K. Mokhtarian, *Contributing Member*
S. C. Shah, *Contributing Member*
K. K. Tam, *Contributing Member*
E. Upitis, *Contributing Member*
Z. Wang, *Contributing Member*

Working Group on Design-By-Analysis (BPV VIII)

B. F. Hantz, *Chair*
T. W. Norton, *Secretary*
D. A. Arnett
R. G. Brown
D. Dewees
C. F. Heberling II
C. E. Hinnant
M. H. Jawad
S. Kataoka
S. Kilambi
K. D. Kirkpatrick
S. Krishnamurthy
A. Mann
N. McKie
G. A. Miller
C. Nadarajah
P. Prueter
M. D. Rana
T. G. Seipp
M. A. Shah
S. Terada
K. Saboda, *Contributing Member*

Subgroup on Fabrication and Examination (BPV VIII)

S. A. Marks, *Chair*
E. A. Whittle, *Vice Chair*
T. Halligan, *Secretary*
B. R. Morelock, *Secretary*
N. Carter
D. I. Morris
O. Mulet
M. J. Pischke
M. J. Rice
C. D. Rodery
B. F. Shelley
P. L. Sturgill
J. P. Swezy, Jr.
E. Upitis
K. Oyamada, *Delegate*
W. J. Bees, *Contributing Member*
L. F. Campbell, *Contributing Member*
W. S. Jacobs, *Contributing Member*
J. Lee, *Contributing Member*
J. Si, *Contributing Member*
R. Uebel, *Contributing Member*
X. Xue, *Contributing Member*
B. Yang, *Contributing Member*

Subgroup on General Requirements (BPV VIII)

M. D. Lower, *Chair*
J. P. Glaspie, *Vice Chair*
F. L. Richter, *Secretary*
R. J. Basile
T. P. Beirne
D. T. Davis
D. B. DeMichael
M. Faulkner
F. Hamtak
L. E. Hayden, Jr.
J. Hoskinson
T. P. Pastor
D. K. Peetz
G. B. Rawls, Jr.
S. C. Roberts
J. C. Sowinski
P. Speranza
D. Srnic
D. B. Stewart
D. A. Swanson
R. Uebel
Z. Wang, *Contributing Member*
Y. Yang, *Contributing Member*

Copyrighted material licensed to Fermi National Laboratory by Clarivate Analytics (US) LLC, subscriptions.techstreet.com, downloaded on 2020-09-23 17:45:20 +0000 by Fermi National Laboratory User.
No further reproduction or distribution is permitted.

Task Group on Fired Heater Pressure Vessels (BPV VIII)

F. Hamtak, *Chair*
J. Hoskinson
W. Kim
S. Kirk
T. P. Pastor
J. Rust
E. Smith
D. Srnic
J. P. Swezy, Jr.

Task Group on Subsea Applications (BPV VIII)

K. Karpanan, *Chair*
M. Sarzynski, *Vice Chair*
L. P. Antalffy
R. C. Biel
P. Bunch
J. Ellens
A. J. Grohmann
S. Harbert
X. Kaculi
F. Kirkemo
C. Lan
N. McKie
S. K. Parimi
J. R. Sims
Y. Wada
R. Cordes, *Contributing Member*
D. T. Peters, *Contributing Member*

Task Group on UG-20(f) (BPV VIII)

S. Krishnamurthy, *Chair*
T. L. Anderson
K. E. Bagnoli
R. P. Deubler
B. F. Hantz
B. R. Macejko
J. Penso
M. Prager
M. D. Rana

Task Group on U-2(g) (BPV VIII)

D. A. Swanson, *Chair*
G. Aurioles, Sr.
S. R. Babka
R. J. Basile
D. K. Chandiramani
R. Mahadeen
T. W. Norton
T. P. Pastor
R. F. Reedy, Sr.
S. C. Roberts
D. Srnic
J. P. Swezy, Jr.
R. Uebel
K. K. Tam, *Contributing Member*

Subgroup on Heat Transfer Equipment (BPV VIII)

G. Aurioles, Sr., *Chair*
P. Matkovics, *Vice Chair*
M. D. Clark, *Secretary*
D. Angstadt
S. R. Babka
J. H. Barbee
O. A. Barsky
L. Bower
T. Bunyarattaphantu
A. Chaudouet
D. L. Kurle
R. Mahadeen
S. Mayeux
S. Neilsen
E. Smith
A. M. Voytko
R. P. Wiberg
I. G. Campbell, *Contributing Member*
G. G. Karcher, *Contributing Member*
T. W. Norton, *Contributing Member*
J. Pasek, *Contributing Member*
D. Srnic, *Contributing Member*
Z. Tong, *Contributing Member*

Working Group on Plate Heat Exchangers (BPV VIII)

P. Matkovics, *Chair*
S. R. Babka
K. Devlin
J. F. Grubb
V. Gudge
F. Hamtak
R. Mahadeen
S. A. Marks
D. I. Morris
M. J. Pischke
D. Srnic
S. Sullivan

Subgroup on High Pressure Vessels (BPV VIII)

G. M. Mital, *Chair*
K. Subramanian, *Vice Chair*
A. P. Maslowski, *Staff Secretary*
L. P. Antalffy
R. C. Biel
P. N. Chaku
L. Fridlund
R. T. Hallman
J. A. Kapp
K. Karpanan
A. K. Khare
S. C. Mordre
G. T. Nelson
D. T. Peters
E. A. Rodriguez
E. D. Roll
K. C. Simpson, Jr.
J. R. Sims
E. Smith
F. W. Tatar
S. Terada
C. Tipple
J. L. Traud
R. Wink
Y. Xu
R. Cordes, *Contributing Member*
R. D. Dixon, *Contributing Member*
R. M. Hoshman, *Contributing Member*
Y. Huang, *Contributing Member*
J. Keltjens, *Contributing Member*
F. Kirkemo, *Contributing Member*
K.-J. Young, *Contributing Member*
D. J. Burns, *Honorary Member*
D. M. Fryer, *Honorary Member*
G. J. Mraz, *Honorary Member*
E. H. Perez, *Honorary Member*

Subgroup on Materials (BPV VIII)

M. Kowalczyk, *Chair*
J. Cameron, *Vice Chair*
K. Xu, *Secretary*
P. Chavdarov
A. Di Rienzo
J. F. Grubb
S. Kilambi
D. Maitra
J. Penso
D. W. Rahoi
J. Robertson
R. C. Sutherlin
E. Upitis
J. D. Fritz, *Contributing Member*
M. Katcher, *Contributing Member*
W. M. Lundy, *Contributing Member*
J. A. McMaster, *Contributing Member*
B. Pletcher, *Contributing Member*
R. Schiavi, Jr., *Contributing Member*
P. G. Wittenbach, *Contributing Member*
X. Wu, *Contributing Member*

Subgroup on Toughness (BPV VIII)

D. L. Kurle, *Chair*
K. Xu, *Vice Chair*
N. Carter
T. Halligan
W. S. Jacobs
S. Krishnamurthy
K. E. Orie
M. D. Rana
F. L. Richter
K. Subramanian
D. A. Swanson
J. P. Swezy, Jr.
S. Terada
E. Upitis
J. Vattappilly
K. Oyamada, *Delegate*
K. Mokhtarian, *Contributing Member*

Subgroup on Graphite Pressure Equipment (BPV VIII)

A. Viet, *Chair*
C. W. Cary, *Vice Chair*
G. C. Becherer
F. L. Brown
J. D. Clements
R. W. Dickerson
E. Soltow
A. A. Stupica

Copyrighted material licensed to Fermi National Laboratory by Clarivate Analytics (US) LLC, subscriptions.techstreet.com, downloaded on 2020-09-23 17:45:20 +0000 by Fermi National Laboratory User.
No further reproduction or distribution is permitted.

China International Working Group (BPV VIII)

X. Chen, *Chair*
B. Shou, *Vice Chair*
Z. Fan, *Secretary*
Y. Chen
Z. Chen
J. Cui
R. Duan
W. Guo
B. Han
J. Hu
Q. Hu
H. Hui
D. Luo
Y. Luo
C. Miao
X. Qian
L. Sun
B. Wang
C. Wu
F. Xu
F. Xuan
Y. Yang
K. Zhang
Yanfeng Zhang
Yijun Zhang
S. Zhao
J. Zheng
G. Zhu

Germany International Working Group (BPV VIII)

P. Chavdarov, *Chair*
A. Spangenberg, *Vice Chair*
H. P. Schmitz, *Secretary*
B. Daume
A. Emrich
J. Fleischfresser
R. Helmholdt
R. Kauer
D. Koelbl
S. Krebs
T. Ludwig
R. A. Meyers
H. Michael
G. Naumann
S. Reich
M. Sykora
P. Paluszkiewicz, *Contributing Member*
R. Uebel, *Contributing Member*

India International Working Group (BPV VIII)

D. Chandiramani, *Chair*
D. Kulkarni, *Vice Chair*
A. D. Dalal, *Secretary*
P. Arulkumar
B. Basu
P. U. Gandhi
V. Jayabalan
P. C. Pathak
S. B. Patil
V. V. P. Kumar
M. P. Shah
P. G. Shah
V. T. Valavan
M. Sharma, *Contributing Member*

Italy International Working Group (BPV VIII)

A. Teli, *Chair*
A. Veroni, *Secretary*
B. G. Alborali
P. Aliprandi
A. Avogadri
R. Boatti
A. Camanni
M. Colombo
P. Conti
P. L. Dinelli
F. Finco
M. Guglielmetti
A. F. Magri
P. Mantovani
M. Massobrio
M. Millefanti
L. Moracchioli
P. Pacor
G. Pontiggia
C. Sangaletti
S. Sarti
G. Gobbi, *Contributing Member*

Special Working Group on Bolted Flanged Joints (BPV VIII)

R. W. Mikitka, *Chair*
G. Aurioles, Sr.
D. Bankston, Jr.
W. Brown
H. Chen
A. Mann
W. McDaniel
M. Osterfoss
J. R. Payne
G. B. Rawls, Jr.
R. Wacker

Task Group on Impulsively Loaded Vessels (BPV VIII)

A. M. Clayton, *Chair*
G. A. Antaki
D. D. Barker
J. E. Didlake, Jr.
T. A. Duffey
K. Hayashi
K. W. King
R. Kitamura
R. A. Leishear
P. O. Leslie
F. Ohlson
E. A. Rodriguez
C. Romero
N. Rushton
J. H. Stofleth
Q. Dong, *Contributing Member*
H.-P. Schildberg, *Contributing Member*
J. E. Shepherd, *Contributing Member*
M. Yip, *Contributing Member*

Subgroup on Interpretations (BPV VIII)

R. Mahadeen, *Chair*
E. Lawson, *Staff Secretary*
G. Aurioles, Sr.
S. R. Babka
R. J. Basile
J. Cameron
N. Carter
C. W. Cary
D. B. DeMichael
R. D. Dixon
M. Kowalczyk
D. L. Kurle
M. D. Lower
A. Mann
P. Matkovics
G. M. Mital
D. I. Morris
D. T. Peters
S. C. Roberts
C. D. Rodery
T. G. Seipp
D. B. Stewart
P. L. Sturgill
D. A. Swanson
J. P. Swezy, Jr.
J. Vattappilly
A. Viet
P. G. Wittenbach
K. Xu
T. P. Pastor, *Contributing Member*

COMMITTEE ON WELDING, BRAZING, AND FUSING (BPV IX)

D. A. Bowers, *Chair*
M. J. Pischke, *Vice Chair*
E. Lawson, *Staff Secretary*
M. Bernasek
M. A. Boring
J. G. Feldstein
P. D. Flenner
S. E. Gingrich
K. L. Hayes
R. M. Jessee
J. S. Lee
W. M. Lundy
T. Melfi
W. F. Newell, Jr.
D. K. Peetz
J. Pillow
E. G. Reichelt
M. J. Rice
M. B. Sims
W. J. Sperko
P. L. Sturgill
J. P. Swezy, Jr.
E. W. Woelfel
A. Roza, *Delegate*
M. Consonni, *Contributing Member*
S. A. Jones, *Contributing Member*
A. S. Olivares, *Contributing Member*
S. Raghunathan, *Contributing Member*
M. J. Stanko, *Contributing Member*
P. L. Van Fosson, *Contributing Member*
R. K. Brown, Jr., *Honorary Member*
M. L. Carpenter, *Honorary Member*
B. R. Newmark, *Honorary Member*
S. D. Reynolds, Jr., *Honorary Member*

Subgroup on Brazing (BPV IX)

M. J. Pischke, *Chair*
E. W. Beckman
A. F. Garbolevsky
S. A. Marks
N. Mohr
A. R. Nywening
J. P. Swezy, Jr.

Copyrighted material licensed to Fermi National Laboratory by Clarivate Analytics (US) LLC, subscriptions.techstreet.com, downloaded on 2020-09-23 17:45:20 +0000 by Fermi National Laboratory User.
No further reproduction or distribution is permitted.

Subgroup on General Requirements (BPV IX)

P. L. Sturgill, *Chair*
S. A. Marks, *Secretary*
E. W. Beckman
J. P. Bell
D. A. Bowers
P. Gilston
F. Hamtak
A. Howard
R. M. Jessee
D. K. Peetz
J. Pillow
H. B. Porter
J. P. Swezy, Jr.
E. W. Woelfel
E. Molina, *Delegate*
B. R. Newmark, *Honorary Member*

Subgroup on Materials (BPV IX)

M. Bernasek, *Chair*
T. Anderson
J. L. Arnold
E. Cutlip
S. E. Gingrich
L. S. Harbison
R. M. Jessee
T. Melfi
S. D. Nelson
M. J. Pischke
A. Roza
C. E. Sainz
W. J. Sperko
P. L. Sturgill
J. Warren
C. Zanfir
V. G. V. Giunto, *Delegate*
B. Krueger, *Contributing Member*
M. J. Stanko, *Contributing Member*

Subgroup on Plastic Fusing (BPV IX)

E. W. Woelfel, *Chair*
D. Burwell
K. L. Hayes
R. M. Jessee
J. Johnston, Jr.
J. E. O'Sullivan
E. G. Reichelt
M. J. Rice
S. Schuessler
M. Troughton
J. Wright

Subgroup on Welding Qualifications (BPV IX)

M. J. Rice, *Chair*
J. S. Lee, *Vice Chair*
K. L. Hayes, *Secretary*
M. Bernasek
M. A. Boring
D. A. Bowers
R. B. Corbit
P. D. Flenner
L. S. Harbison
M. Heinrichs
W. M. Lundy
T. Melfi
W. F. Newell, Jr.
B. R. Newton
S. Raghunathan
E. G. Reichelt
M. B. Sims
W. J. Sperko
S. A. Sprague
P. L. Sturgill
J. P. Swezy, Jr.
T. C. Wiesner
A. D. Wilson
D. Chandiramani, *Contributing Member*
M. Consonni, *Contributing Member*
M. Dehghan, *Contributing Member*

Germany International Working Group (BPV IX)

P. Chavdarov, *Chair*
A. Spangenberg, *Vice Chair*
E. Lawson, *Staff Secretary*
P. Thiebo, *Secretary*
J. Daldrup
B. Daume
E. Floer
R. Helmholdt
S. Krebs
T. Ludwig
G. Naumann
A. Roza
K.-G. Toelle
F. Wodke

Italy International Working Group (BPV IX)

A. Camanni, *Chair*
A. Veroni, *Secretary*
P. Angelini
M. Bernasek
R. Boatti
P. L. Dinelli
F. Ferrarese
E. Lazzari
M. Mandina
M. Massobrio
A. S. Monastra
L. Moracchioli
P. Pacor
G. Pontiggia
S. Verderame
A. Volpi
G. Gobbi, *Contributing Member*

COMMITTEE ON FIBER-REINFORCED PLASTIC PRESSURE VESSELS (BPV X)

B. Linnemann, *Chair*
B. F. Shelley, *Vice Chair*
P. D. Stumpf, *Staff Secretary*
A. L. Beckwith
F. L. Brown
J. L. Bustillos
B. R. Colley
T. W. Cowley
I. L. Dinovo
D. Eisberg
M. R. Gorman
B. Hebb
L. E. Hunt
D. L. Keeler
D. H. McCauley
N. L. Newhouse
G. Ramirez
J. R. Richter
D. O. Yancey, Jr.
P. H. Ziehl
D. H. Hodgkinson, *Contributing Member*

COMMITTEE ON NUCLEAR INSERVICE INSPECTION (BPV XI)

R. W. Swayne, *Chair*
S. D. Kulat, *Vice Chair*
D. W. Lamond, *Vice Chair*
K. Verderber, *Staff Secretary*
V. L. Armentrout
J. F. Ball
W. H. Bamford
M. L. Benson
J. M. Boughman
S. B. Brown
T. L. Chan
R. C. Cipolla
D. R. Cordes
D. D. Davis
H. Do
R. L. Dyle
E. V. Farrell, Jr.
M. J. Ferlisi
P. D. Fisher
E. B. Gerlach
T. J. Griesbach
J. Hakii
M. L. Hall
D. O. Henry
D. R. Lee
J. T. Lindberg
G. A. Lofthus
H. Malikowski
G. Navratil
S. A. Norman
J. E. O'Sullivan
N. A. Palm
G. C. Park
A. T. Roberts III
D. A. Scarth
F. J. Schaaf, Jr.
J. C. Spanner, Jr.
D. J. Tilly
D. E. Waskey
J. G. Weicks
H. D. Chung, *Delegate*
C. Ye, *Delegate*
W. C. Holston, *Alternate*
R. O. McGill, *Alternate*
T. Nuoffer, *Alternate*
B. R. Newton, *Contributing Member*
C. D. Cowfer, *Honorary Member*
R. E. Gimple, *Honorary Member*
F. E. Gregor, *Honorary Member*
O. F. Hedden, *Honorary Member*
R. D. Kerr, *Honorary Member*
P. C. Riccardella, *Honorary Member*
R. A. West, *Honorary Member*
C. J. Wirtz, *Honorary Member*
R. A. Yonekawa, *Honorary Member*

Executive Committee (BPV XI)

S. D. Kulat, *Chair*
R. W. Swayne, *Vice Chair*
K. Verderber, *Staff Secretary*
W. H. Bamford
M. L. Benson
R. L. Dyle
M. J. Ferlisi
E. B. Gerlach
D. W. Lamond
J. T. Lindberg
G. Navratil
T. Nuoffer
G. C. Park
J. C. Spanner, Jr.
W. C. Holston, *Alternate*

Copyrighted material licensed to Fermi National Laboratory by Clarivate Analytics (US) LLC, subscriptions.techstreet.com, downloaded on 2020-09-23 17:45:20 +0000 by Fermi National Laboratory User.
No further reproduction or distribution is permitted.

Argentina International Working Group (BPV XI)

F. M. Schroeter, *Chair*
M. F. Liendo, *Vice Chair*
O. Martinez, *Staff Secretary*
D. A. Cipolla
A. Claus
D. Costa
D. P. Delfino
D. N. Dell'Erba
A. Dominguez
S. A. Echeverria
E. P. Fresquet
M. M. Gamizo
I. M. Guerreiro
F. Llorente
R. J. Lopez
M. Magliocchi
L. R. Miño
J. Monte
M. D. Pereda
A. Politi
C. G. Real
G. J. Scian
M. J. Solari
P. N. Torano
P. Yamamoto

China International Working Group (BPV XI)

J. H. Liu, *Chair*
Y. Nie, *Vice Chair*
C. Ye, *Vice Chair*
M. W. Zhou, *Secretary*
J. F. Cai
H. Chen
H. D. Chen
Y. Cheng
Y. B. Guo
Y. Hongqi
D. R. Horn
Y. Hou
D. M. Kang
S. X. Lin
Y. Liu
W. N. Pei
L. Shiwei
Y. X. Sun
G. X. Tang
Q. Wang
Q. W. Wang
Z. S. Wang
L. Xing
F. Xu
Q. Yin
K. Zhang
Y. Zhang
Y. Zhe
Z. M. Zhong

German International Working Group (BPV XI)

R. Döring, *Chair*
R. Trieglaff, *Vice Chair*
R. Piel, *Secretary*
H.-R. Bath
A. Casse
S. Dugan
M. Hagenbruch
E. Iacopetta
H.-W. Lange
N. Legl
T. Ludwig
X. Pitoiset
M. Reichert
H. Schau
L. Sybertz
J. Wendt
S. Zickler

Special Working Group on Editing and Review (BPV XI)

R. W. Swayne, *Chair*
M. Orihuela
K. R. Rao
D. J. Tilly

Task Group on Inspectability (BPV XI)

J. T. Lindberg, *Chair*
M. J. Ferlisi, *Secretary*
W. H. Bamford
A. Cardillo
D. R. Cordes
P. Gionta
D. O. Henry
E. Henry
J. Honcharik
J. Howard
R. Klein
C. Latiolais
D. Lieb
G. A. Lofthus
D. E. Matthews
P. J. O'Regan
J. Ossmann
S. A. Sabo
P. Sullivan
C. Thomas
J. Tucker

Task Group on ISI of Spent Nuclear Fuel Storage and Transportation Containment Systems (BPV XI)

K. Hunter, *Chair*
M. Orihuela, *Secretary*
D. J. Ammerman
W. H. Borter
J. Broussard
S. Brown
C. R. Bryan
T. Carraher
D. Dunn
N. Fales
R. C. Folley
G. Grant
B. Gutherman
S. Horowitz
M. W. Joseph
M. Keene
M. Liu
K. Mauskar
R. M. Meyer
B. L. Montgomery
T. Nuoffer
R. M. Pace
E. L. Pleins
M. A. Richter
B. Sarno
R. Sindelar
J. C. Spanner, Jr.
M. Staley
J. Wellwood
X. J. Zhai
P.-S. Lam, *Alternate*
G. White, *Alternate*
J. Wise, *Alternate*
H. Smith, *Contributing Member*

Subgroup on Evaluation Standards (SG-ES) (BPV XI)

W. H. Bamford, *Chair*
N. A. Palm, *Secretary*
M. Brumovsky
H. D. Chung
R. C. Cipolla
C. M. Faidy
B. R. Ganta
T. J. Griesbach
K. Hasegawa
K. Hojo
D. N. Hopkins
D. R. Lee
Y. S. Li
R. O. McGill
H. S. Mehta
K. Miyazaki
R. M. Pace
J. C. Poehler
S. Ranganath
D. A. Scarth
D.-J. Shim
G. L. Stevens
A. Udyawar
T. V. Vo
G. M. Wilkowski
S. X. Xu
M. L. Benson, *Alternate*

Task Group on Evaluation of Beyond Design Basis Events (SG-ES) (BPV XI)

R. M. Pace, *Chair*
S. X. Xu, *Secretary*
G. A. Antaki
P. R. Donavin
R. G. Gilada
T. J. Griesbach
M. Hayashi
K. Hojo
S. A. Kleinsmith
H. S. Mehta
D. V. Sommerville
T. V. Vo
K. R. Wichman
G. M. Wilkowski
T. Weaver, *Contributing Member*

Copyrighted material licensed to Fermi National Laboratory by Clarivate Analytics (US) LLC, subscriptions.techstreet.com, downloaded on 2020-09-23 17:45:20 +0000 by Fermi National Laboratory User.
No further reproduction or distribution is permitted.

Working Group on Flaw Evaluation (SG-ES) (BPV XI)

R. C. Cipolla, *Chair*
S. X. Xu, *Secretary*
W. H. Bamford
M. L. Benson
B. Bezensek
M. Brumovsky
H. D. Chung
T. E. Demers
M. A. Erickson
C. M. Faidy
M. M. Farooq
B. R. Ganta
R. G. Gilada
F. D. Hayes
P. H. Hoang
K. Hojo
D. N. Hopkins
Y. Kim
V. Lacroix
D. R. Lee
Y. S. Li
M. Liu
H. S. Mehta
G. A. A. Miessi
K. Miyazaki
S. Noronha
R. K. Qashu
S. Ranganath
P. J. Rush
D. A. Scarth
W. L. Server
D.-J. Shim
S. Smith
M. Uddin
A. Udyawar
T. V. Vo
B. Wasiluk
K. R. Wichman
G. M. Wilkowski

Working Group on Pipe Flaw Evaluation (SG-ES) (BPV XI)

D. A. Scarth, *Chair*
G. M. Wilkowski, *Secretary*
K. Azuma
M. L. Benson
M. Brumovsky
F. W. Brust
H. D. Chung
R. C. Cipolla
N. G. Cofie
T. E. Demers
C. M. Faidy
M. M. Farooq
B. R. Ganta
S. R. Gosselin
C. E. Guzman-Leong
K. Hasegawa
P. H. Hoang
K. Hojo
D. N. Hopkins
E. J. Houston
R. Janowiak
S. Kalyanam
K. Kashima
V. Lacroix
Y. S. Li
R. O. McGill
H. S. Mehta
G. A. A. Miessi
K. Miyazaki
S. H. Pellet
P. J. Rush
W. L. Server
D.-J. Shim
S. Smith
A. Udyawar
T. V. Vo
B. Wasiluk
S. X. Xu
A. Alleshwaram, *Alternate*

Working Group on Flaw Evaluation Reference Curves (BPV XI)

G. L. Stevens, *Chair*
A. Udyawar, *Secretary*
W. H. Bamford
M. L. Benson
F. W. Brust
R. C. Cipolla
M. M. Farooq
A. E. Freed
K. Hasegawa
D. N. Hopkins
R. Janowiak
K. Kashima
K. Koyama
D. R. Lee
H. S. Mehta
K. Miyazaki
B. Pellereau
S. Ranganath
D. A. Scarth
D.-J. Shim
S. Smith
T. V. Vo
S. X. Xu

Task Group on Evaluation Procedures for Degraded Buried Pipe (WG-PFE) (BPV XI)

R. O. McGill, *Chair*
S. X. Xu, *Secretary*
F. G. Abatt
G. A. Antaki
R. C. Cipolla
R. G. Gilada
K. Hasegawa
K. M. Hoffman
R. Janowiak
M. Kassar
M. Moenssens
D. P. Munson
R. M. Pace
P. J. Rush
D. A. Scarth

Working Group on Operating Plant Criteria (SG-ES) (BPV XI)

N. A. Palm, *Chair*
A. E. Freed, *Secretary*
K. R. Baker
W. H. Bamford
M. Brumovsky
T. L. Dickson
R. L. Dyle
M. A. Erickson
T. J. Griesbach
M. Hayashi
R. Janowiak
S. A. Kleinsmith
H. Kobayashi
H. S. Mehta
A. D. Odell
R. M. Pace
J. C. Poehler
S. Ranganath
W. L. Server
C. A. Tomes
A. Udyawar
T. V. Vo
D. P. Weakland
H. Q. Xu
T. Hardin, *Alternate*

Subgroup on Nondestructive Examination (SG-NDE) (BPV XI)

J. C. Spanner, Jr., *Chair*
D. R. Cordes, *Secretary*
M. Briley
C. Brown
T. L. Chan
S. E. Cumblidge
K. J. Hacker
J. Harrison
D. O. Henry
J. T. Lindberg
G. A. Lofthus
S. A. Sabo
F. J. Schaaf, Jr.
R. V. Swain
C. A. Nove, *Alternate*

Working Group on Personnel Qualification and Surface Visual and Eddy Current Examination (SG-NDE) (BPV XI)

J. T. Lindberg, *Chair*
C. Brown, *Secretary*
J. E. Aycock
J. Bennett
S. E. Cumblidge
A. Diaz
N. Farenbaugh
D. O. Henry
C. Shinsky
J. C. Spanner, Jr.
T. Thulien
J. T. Timm

Working Group on Procedure Qualification and Volumetric Examination (SG-NDE) (BPV XI)

G. A. Lofthus, *Chair*
J. Harrison, *Secretary*
M. Briley
A. Bushmire
D. R. Cordes
S. R. Doctor
K. J. Hacker
W. A. Jensen
D. A. Kull
C. A. Nove
S. A. Sabo
R. V. Swain
S. J. Todd
D. K. Zimmerman
B. Lin, *Alternate*

Copyrighted material licensed to Fermi National Laboratory by Clarivate Analytics (US) LLC, subscriptions.techstreet.com, downloaded on 2020-09-23 17:45:20 +0000 by Fermi National Laboratory User.
No further reproduction or distribution is permitted.

Subgroup on Repair/Replacement Activities (SG-RRA) (BPV XI)

E. B. Gerlach, *Chair*
E. V. Farrell, Jr., *Secretary*
J. F. Ball
M. Brandes
S. B. Brown
R. Clow
P. D. Fisher
M. L. Hall
S. L. McCracken
A. B. Meichler
B. R. Newton
J. E. O'Sullivan
G. C. Park
P. Raynaud
R. R. Stevenson
R. W. Swayne
D. J. Tilly
D. E. Waskey
J. G. Weicks
W. C. Holston, *Alternate*

Working Group on Welding and Special Repair Processes (SG-RRA) (BPV XI)

D. E. Waskey, *Chair*
D. J. Tilly, *Secretary*
D. Barborak
S. J. Findlan
P. D. Fisher
R. C. Folley
M. L. Hall
W. C. Holston
C. C. Kim
M. Kris
S. E. Marlette
S. L. McCracken
D. B. Meredith
B. R. Newton
J. E. O'Sullivan
D. Segletes
J. G. Weicks

Task Group on Temper Bead Welding (BPV XI)

S. J. Findlan, *Chair*
D. Barborak
M. L. Hall
S. L. McCracken
D. B. Meredith
N. Mohr
B. R. Newton
J. E. O'Sullivan
D. Segletes
J. Tatman
D. J. Tilly
D. E. Waskey
J. G. Weicks

Task Group on Weld Overlay (BPV XI)

S. L. McCracken, *Chair*
S. J. Findlan
M. L. Hall
S. Hunter
S. E. Marlette
D. B. Meredith
P. Raynaud
D. Segletes
D. E. Waskey
J. G. Weicks

Working Group on Non-Metals Repair/Replacement Activities (SG-RRA) (BPV XI)

J. E. O'Sullivan, *Chair*
S. Schuessler, *Secretary*
M. Brandes
J. Johnston, Jr.
M. Lashley
M. P. Marohl
T. M. Musto
S. Patterson
A. Pridmore
P. Raynaud
F. J. Schaaf, Jr.
R. Stakenborghs

Task Group on Repair by Carbon Fiber Composites (WGN-MRR) (BPV XI)

J. E. O'Sullivan, *Chair*
S. F. Arnold
S. W. Choi
D. R. Dechene
M. Golliet
L. S. Gordon
M. Kuntz
M. P. Marohl
C. A. Nove
R. P. Ojdrovic
A. Pridmore
P. Raynaud
S. Rios
V. Roy
J. Sealey
N. Stoeva
M. F. Uddin
J. Wen
B. Davenport, *Alternate*
C. W. Rowley, *Alternate*

Working Group on Design and Programs (SG-RRA) (BPV XI)

S. B. Brown, *Chair*
A. B. Meichler, *Secretary*
O. Bhatty
R. Clow
R. R. Croft
E. V. Farrell, Jr.
E. B. Gerlach
H. Malikowski
G. C. Park
M. A. Pyne
P. Raynaud
R. R. Stevenson
R. W. Swayne

Task Group on Risk-Informed Categorization and Treatment (BPV XI)

S. L. McCracken, *Chair*
T. Anselmi
H. Do
M. J. Ferlisi
E. B. Gerlach
K. W. Hall
A. E. Keyser
S. D. Kulat
D. W. Lamond
A. B. Meichler
G. Navratil
S. A. Norman
P. J. O'Regan
J. E. O'Sullivan
M. Ralstin
T. V. Vo
J. G. Weicks

Subgroup on Water-Cooled Systems (SG-WCS) (BPV XI)

G. Navratil, *Chair*
J. Nygaard, *Secretary*
J. M. Agold
V. L. Armentrout
J. M. Boughman
S. B. Brown
S. T. Chesworth
D. D. Davis
H. Q. Do
R. L. Dyle
M. J. Ferlisi
K. W. Hall
P. J. Hennessey
K. M. Hoffman
S. D. Kulat
D. W. Lamond
T. Nomura
T. Nuoffer
H. M. Stephens, Jr.
M. Weis
M. J. Homiack, *Alternate*

Task Group on High Strength Nickel Alloys Issues (SG-WCS) (BPV XI)

H. Malikowski, *Chair*
W. H. Bamford
K. Dietrich
P. R. Donavin
R. L. Dyle
K. M. Hoffman
C. Lohse
S. E. Marlette
B. L. Montgomery
G. C. Park
W. Sims
J. C. Spanner, Jr.
D. E. Waskey

Working Group on Containment (SG-WCS) (BPV XI)

H. M. Stephens, Jr., *Chair*
S. G. Brown, *Secretary*
P. S. Ghosal
H. T. Hill
B. Lehman
J. A. Munshi
M. Sircar
P. C. Smith
F. Syed
R. Thames
S. Walden

Copyrighted material licensed to Fermi National Laboratory by Clarivate Analytics (US) LLC, subscriptions.techstreet.com, downloaded on 2020-09-23 17:45:20 +0000 by Fermi National Laboratory User.
No further reproduction or distribution is permitted.

Working Group on Inspection of Systems and Components (SG-WCS) (BPV XI)

M. J. Ferlisi, *Chair*
M. Weis, *Secretary*
J. M. Agold
R. W. Blyde
K. Caver
C. Cueto-Felgueroso
H. Q. Do
K. W. Hall
M. L. G. Heras
K. M. Hoffman
J. Howard
S. D. Kulat
E. Lantz
G. J. Navratil
T. Nomura
J. C. Nygaard
J. C. Younger

Working Group on Pressure Testing (SG-WCS) (BPV XI)

J. M. Boughman, *Chair*
S. A. Norman, *Secretary*
T. Anselmi
B. Casey
Y.-K. Chung
M. J. Homiack
A. E. Keyser
D. W. Lamond
J. K. McClanahan
T. P. McClure
B. L. Montgomery
C. Thomas

Task Group on Buried Components Inspection and Testing (WG-PT) (BPV XI)

D. W. Lamond, *Chair*
J. M. Boughman, *Secretary*
M. Moenssens, *Secretary*
T. Anselmi
V. L. Armentrout
B. Davenport
A. Hiser
J. Ossmann
S. Rios

Working Group on Risk-Informed Activities (SG-WCS) (BPV XI)

M. A. Pyne, *Chair*
S. T. Chesworth, *Secretary*
J. M. Agold
C. Cueto-Felgueroso
A. E. Freed
J. Hakii
K. W. Hall
M. J. Homiack
S. D. Kulat
D. W. Lamond
E. Lantz
G. J. Navratil
P. J. O'Regan
N. A. Palm
D. Vetter
J. C. Younger

Working Group on General Requirements (BPV XI)

T. Nuoffer, *Chair*
J. Mayo, *Secretary*
J. F. Ball
T. L. Chan
P. J. Hennessey
A. T. Roberts III

Subgroup on Reliability and Integrity Management Program (SG-RIM) (BPV XI)

F. J. Schaaf, Jr., *Chair*
A. T. Roberts III, *Secretary*
T. Anselmi
N. Broom
S. R. Doctor
J. D. Fletcher
J. T. Fong
T. Graham
J. Grimm
B. Heald
D. M. Jones
D. R. Lee
B. Lin
R. K. Miller
R. W. Swayne
S. Takaya
R. Vayda

Working Group on MANDE (BPV XI)

H. M. Stephens, Jr., *Chair*
S. R. Doctor
N. A. Finney
J. T. Fong
D. O. Henry
L. E. Mullins
M. Turnbow

JSME/ASME Joint Task Group for System-Based Code (SWG-RIM) (BPV XI)

T. Asayama, *Chair*
S. R. Doctor
K. Dozaki
M. Hayashi
D. M. Jones
Y. Kamishima
D. R. Lee
H. Machida
A. T. Roberts III
F. J. Schaaf, Jr.
S. Takaya
D. Watanabe

COMMITTEE ON TRANSPORT TANKS (BPV XII)

N. J. Paulick, *Chair*
M. D. Rana, *Vice Chair*
J. Oh, *Staff Secretary*
A. N. Antoniou
P. Chilukuri
W. L. Garfield
M. Pitts
T. A. Rogers
S. Staniszewski
A. P. Varghese
Y. Doron, *Contributing Member*
R. Meyers, *Contributing Member*
M. R. Ward, *Contributing Member*

Executive Committee (BPV XII)

M. D. Rana, *Chair*
N. J. Paulick, *Vice Chair*
J. Oh, *Staff Secretary*
M. Pitts
S. Staniszewski
A. P. Varghese

Subgroup on Design and Materials (BPV XII)

A. P. Varghese, *Chair*
R. C. Sallash, *Secretary*
D. K. Chandiramani
P. Chilukuri
Y. Doron
R. D. Hayworth
S. L. McWilliams
N. J. Paulick
M. D. Rana
T. A. Rogers
M. Shah
S. Staniszewski
K. Xu
A. T. Duggleby, *Contributing Member*
G. G. Karcher, *Contributing Member*
M. R. Ward, *Contributing Member*
J. Zheng, *Contributing Member*

Subgroup on Fabrication, Inspection, and Continued Service (BPV XII)

M. Pitts, *Chair*
P. Chilukuri
Y. Doron
W. Garfield
R. D. Hayworth
O. Mulet
J. Roberts
T. A. Rogers
M. Rudek
R. C. Sallash
L. Selensky
S. Staniszewski
S. E. Benet, *Contributing Member*
G. McRae, *Contributing Member*
A. S. Olivares, *Contributing Member*

Copyrighted material licensed to Fermi National Laboratory by Clarivate Analytics (US) LLC, subscriptions.techstreet.com, downloaded on 2020-09-23 17:45:20 +0000 by Fermi National Laboratory User.
No further reproduction or distribution is permitted.

Subgroup on General Requirements (BPV XII)

S. Staniszewski, *Chair*
A. N. Antoniou
Y. Doron
J. L. Freiler
W. L. Garfield
O. Mulet
B. F. Pittel
M. Pitts
T. Rummel
R. C. Sallash
L. Selensky
P. Chilukuri, *Contributing Member*
T. J. Hitchcock, *Contributing Member*
G. McRae, *Contributing Member*
S. L. McWilliams, *Contributing Member*
T. A. Rogers, *Contributing Member*
D. G. Shelton, *Contributing Member*
M. R. Ward, *Contributing Member*

Subgroup on Nonmandatory Appendices (BPV XII)

N. J. Paulick, *Chair*
S. Staniszewski, *Secretary*
P. Chilukuri
M. Pitts
T. A. Rogers
D. G. Shelton
S. E. Benet, *Contributing Member*
D. D. Brusewitz, *Contributing Member*
Y. Doron, *Contributing Member*
T. J. Hitchcock, *Contributing Member*

COMMITTEE ON OVERPRESSURE PROTECTION (BPV XIII)

D. B. DeMichael, *Chair*
J. P. Glaspie, *Vice Chair*
C. E. O'Brien, *Staff Secretary*
J. F. Ball
J. Burgess
J. W. Dickson
A. Donaldson
S. F. Harrison, Jr.
D. Miller
B. K. Nutter
T. Patel
M. Poehlmann
D. E. Tompkins
Z. Wang
J. A. West
A. Wilson
B. Calderon, *Alternate*
H. Aguilar, *Contributing Member*
R. W. Barnes, *Contributing Member*
R. D. Danzy, *Contributing Member*
M. Elias, *Contributing Member*
D. Felix, *Contributing Member*
A. Frigerio, *Contributing Member*
A. Hassan, *Contributing Member*
P. K. Lam, *Contributing Member*
J. M. Levy, *Contributing Member*
M. Mengon, *Contributing Member*
J. Mize, *Contributing Member*
M. Mullavey, *Contributing Member*
S. K. Parimi, *Contributing Member*
J. Phillips, *Contributing Member*
R. Raman, *Contributing Member*
M. Reddy, *Contributing Member*
K. Shores, *Contributing Member*
D. E. Tezzo, *Contributing Member*

Executive Committee (BPV XIII)

J. P. Glaspie, *Chair*
C. E. O'Brien, *Staff Secretary*
J. F. Ball
D. B. DeMichael
A. Donaldson
D. Miller
B. K. Nutter
J. A. West

Subgroup on Design and Materials (BPV XIII)

D. Miller, *Chair*
C. E. Beair
A. Biesecker
W. E. Chapin
J. L. Freiler
B. Joergensen
V. Kalyanasundaram
B. J. Mollitor
B. Mruk
T. Patel
A. C. Ramirez
G. Ramirez
J. A. West
A. Williams
D. J. Azukas, *Contributing Member*
R. D. Danzy, *Contributing Member*
A. Hassan, *Contributing Member*
R. Miyata, *Contributing Member*
M. Mullavey, *Contributing Member*
S. K. Parimi, *Contributing Member*
K. Shores, *Contributing Member*

Subgroup on General Requirements (BPV XIII)

A. Donaldson, *Chair*
D. J. Azukas
J. F. Ball
M. Z. Brown
J. Burgess
D. B. DeMichael
M. Elias
T. M. Fabiani
S. T. French
J. Gillham
J. P. Glaspie
R. Klimas, Jr.
Z. E. Kumana
P. K. Lam
J. M. Levy
K. R. May
J. Mize
L. Moedinger
M. Mullavey
J. Phillips
B. F. Pittel
M. Poehlmann
K. Shores
D. E. Tezzo
D. E. Tompkins
J. F. White
B. Calderon, *Contributing Member*
P. Chavdarov, *Contributing Member*
J. L. Freiler, *Contributing Member*
G. D. Goodson, *Contributing Member*
C. Haldiman, *Contributing Member*
B. Joergensen, *Contributing Member*
C. Lasarte, *Contributing Member*
M. Mengon, *Contributing Member*
D. E. Miller, *Contributing Member*
R. Miyata, *Contributing Member*
B. Mruk, *Contributing Member*
R. Raman, *Contributing Member*
M. Reddy, *Contributing Member*

Subgroup on Nuclear (BPV XIII)

J. F. Ball, *Chair*
J. W. Dickson
S. Jones
R. Krithivasan
K. R. May
D. Miller
T. Patel
K. Shores
I. H. Tseng
J. Yu
N. J. Hansing, *Alternate*
B. J. Yonsky, *Alternate*
S. T. French, *Contributing Member*
D. B. Ross, *Contributing Member*

Subgroup on Testing (BPV XIII)

B. K. Nutter, *Chair*
T. P. Beirne
B. Calderon
V. Chicola
J. W. Dickson
B. Engman
R. J. Garnett
R. Houk
D. T. Kelley
R. Lack
M. Mengon
C. Sharpe
J. R. Thomas
Z. Wang
A. Wilson
S. Alessandro, *Contributing Member*
J. Britt, *Contributing Member*
W. E. Chapin, *Contributing Member*
J. Cockerham, *Contributing Member*
R. Miyata, *Contributing Member*
J. Mize, *Contributing Member*
M. Mullavey, *Contributing Member*
R. Raman, *Contributing Member*
A. C. Ramirez, *Contributing Member*
G. Ramirez, *Contributing Member*
K. Shores, *Contributing Member*

Copyrighted material licensed to Fermi National Laboratory by Clarivate Analytics (US) LLC, subscriptions.techstreet.com, downloaded on 2020-09-23 17:45:20 +0000 by Fermi National Laboratory User.
No further reproduction or distribution is permitted.

COMMITTEE ON BOILER AND PRESSURE VESSEL CONFORMITY ASSESSMENT (CBPVCA)

R. V. Wielgoszinski, *Chair*
G. Scribner, *Vice Chair*
G. Moino, *Staff Secretary*
P. Murray, *Staff Secretary*
J. P. Chicoine
D. C. Cook
P. D. Edwards
T. E. Hansen
B. L. Krasiun
P. F. Martin
L. E. McDonald
D. Miller
I. Powell
D. E. Tuttle
R. Uebel
E. A. Whittle
P. Williams
T. P. Beirne, *Alternate*
M. Blankinship, *Alternate*
J. W. Dickson, *Alternate*
J. M. Downs, *Alternate*
B. J. Hackett, *Alternate*
W. Hibdon, *Alternate*
Y.-S. Kim, *Alternate*
B. Morelock, *Alternate*
M. Poehlmann, *Alternate*
R. Rockwood, *Alternate*
L. Skarin, *Alternate*
R. D. Troutt, *Alternate*
B. C. Turczynski, *Alternate*
S. V. Voorhees, *Alternate*
D. Cheetham, *Contributing Member*
A. J. Spencer, *Honorary Member*

COMMITTEE ON NUCLEAR CERTIFICATION (CNC)

R. R. Stevenson, *Chair*
J. DeKleine, *Vice Chair*
L. Powers, *Staff Secretary*
S. Andrews
G. Gobbi
S. M. Goodwin
J. W. Highlands
K. A. Huber
K. A. Kavanagh
J. C. Krane
M. A. Lockwood
L. M. Plante
T. E. Quaka
G. Szabatura
C. Turylo
D. M. Vickery
E. A. Whittle
C. S. Withers
J. Ball, *Alternate*
P. J. Coco, *Alternate*
N. DeSantis, *Alternate*
C. Dinic, *Alternate*
P. D. Edwards, *Alternate*
D. P. Gobbi, *Alternate*
K. M. Hottle, *Alternate*
P. Krane, *Alternate*
M. Martin, *Alternate*
D. Nenstiel, *Alternate*
M. Paris, *Alternate*
E. L. Pleins, *Alternate*
P. F. Prescott, *Alternate*
A. Torosyan, *Alternate*
S. V. Voorhees, *Alternate*
M. Wilson, *Alternate*
S. Yang, *Alternate*
S. F. Harrison, Jr., *Contributing Member*

Copyrighted material licensed to Fermi National Laboratory by Clarivate Analytics (US) LLC, subscriptions.techstreet.com, downloaded on 2020-09-23 17:45:20 +0000 by Fermi National Laboratory User.
No further reproduction or distribution is permitted.

INTRODUCTION

The following is provided as a brief introduction to Section IX, and cannot be considered as a substitute for the actual review of the document. However, this introduction is intended to give the reader a better understanding of the purpose and organization of Section IX.

Section IX of the ASME Boiler and Pressure Vessel Code relates to the qualification of welders, welding operators, brazers, brazing operators, and fusing operators, and the procedures employed in welding, brazing, or plastic fusing in accordance with the ASME Boiler and Pressure Vessel Code and the ASME B31 Code for Pressure Piping. As such, this is an active document subject to constant review, interpretation, and improvement to recognize new developments and research data. Section IX is a document referenced for the qualification of material joining processes by various construction codes such as Section I, III, IV, VIII, XII, etc. These particular construction codes apply to specific types of fabrication and may impose additional requirements or exemptions to Section IX qualifications. Qualification in accordance with Section IX is not a guarantee that procedures and performance qualifications will be acceptable to a particular construction code.

Section IX does not contain rules for production joining, nor does it contain rules to cover all factors affecting production material joining properties under all circumstances. Where such factors are determined by the organization to affect material joining properties, the organization shall address those factors in the Procedure Specification to ensure that the required properties are achieved in the production material joining process.

The purpose of the Procedure Specification and the Procedure Qualification Record (PQR) is to ensure the material joining process proposed for construction is capable of producing joints having the required mechanical properties for the intended application. Personnel performing the material joining procedure qualification test shall be sufficiently skilled. The purpose of the procedure qualification test is to establish the mechanical properties of the joint produced by the material joining process and not the skill of the personnel using the material joining process. In addition, special consideration is given when toughness testing is required by other Sections of the Code. The toughness supplementary essential variables do not apply unless referenced by the construction codes.

The purpose of Performance Qualification is to determine the ability of the person using a material joining process to produce a sound joint. In Operator Performance Qualification, the basic criterion is to determine the ability of the operator to properly operate the equipment to produce a sound joint.

In developing Section IX, each material joining process that is included was reviewed with regard to those factors (called variables) which have an effect upon the material joining operations as applied to procedure or performance criteria.

The user of Section IX should be aware of how Section IX is organized. It is divided into four Parts: general requirements, welding, brazing, and plastic fusing. Each Part addressing a material joining process is then divided into Articles. The Articles for each material joining process deal with the following:

(a) general requirements specifically applicable to the material joining process (Article I Welding, Article XI Brazing, and Article XXI Plastic Fusing)

(b) procedure qualifications (Article II Welding, Article XII Brazing, and Article XXII Plastic Fusing)

(c) performance qualifications (Article III Welding, Article XIII Brazing, and Article XXIII Plastic Fusing)

(d) data (Article IV Welding, Article XIV Brazing, and Article XXIV Plastic Fusing)

(e) standard welding procedure specifications (Article V Welding)

These articles contain general references and guides that apply to procedure and performance qualifications such as positions, type and purpose of various mechanical tests, acceptance criteria, and the applicability of Section IX, which previously appeared in the Preamble of the 1980 Edition of Section IX (the Preamble has since been deleted). The general requirement articles reference the data articles for specific details of the testing equipment and removal of the mechanical test specimens.

PROCEDURE QUALIFICATIONS

Each material joining process that has been evaluated and adopted by Section IX is listed separately with the essential and nonessential variables as they apply to that particular process. In general, the Procedure Specifications are required to list all essential and nonessential variables for each process that is included under that particular procedure

Copyrighted material licensed to Fermi National Laboratory by Clarivate Analytics (US) LLC, subscriptions.techstreet.com, downloaded on 2020-09-23 17:45:20 +0000 by Fermi National Laboratory User.
No further reproduction or distribution is permitted.

specification. When an essential variable must be changed beyond the range qualified and the change is not an editorial revision to correct an error, requalification of the procedure specification is required. If a change is made in a nonessential variable, the procedure need only be revised or amended to address the nonessential variable change. When toughness testing is required for Welding Procedure Specification (WPS) qualification by the construction code, the supplementary essential variables become additional essential variables, and a change in these variables requires requalification of the procedure specification.

In addition to covering various processes, there are also rules for procedure qualification of corrosion-resistant weld metal overlay and hard-facing weld metal overlay.

Beginning with the 2000 Addenda, the use of Standard Welding Procedure Specifications (SWPSs) was permitted. Article V provides the requirements and limitations that govern the use of these documents. The SWPSs approved for use are listed in Mandatory Appendix E.

In the 2004 Edition, rules for temper bead welding were added.

With the incorporation of the new Creep-Strength Enhanced Ferritic (CSEF) alloys in the 1986 Edition, using the existing P-Number groupings to specify PWHT parameters can lead to variations in heat treatments that may significantly degrade the mechanical properties of these alloys. CSEF alloys are a family of ferritic steels whose creep strength is enhanced by the creation of a precise condition of microstructure, specifically martensite or bainite, which is stabilized during tempering by controlled precipitation of temper-resistant carbides, carbo-nitrides, or other stable phases.

In the 2007 Edition of the Code, only P-No. 5B, Group 2 base metals met this definition and were approved for Code construction. Looking forward, a number of CSEF alloys are already in use in Code Cases and drawing near to incorporation. To facilitate addressing their special requirements, P-No. 15A through P-No. 15F have been established for CSEF alloys.

In the 2013 Edition, Part QG General Requirements and Part QF Plastic Fusing were added.

PERFORMANCE QUALIFICATIONS

These articles list separately the various processes with the essential variables that apply to the performance qualifications of each process. The performance qualifications are limited by essential variables.

The performance qualification articles have numerous paragraphs describing general applicable variables for all processes. QW-350, QB-350, and QF-360 list additional essential variables that are applicable for specific processes. The QW-350 variables do not apply to welding operators. QW-360 lists the additional essential variables for welding operators.

Generally, a welder or welding operator may be qualified by mechanical bending tests, or volumetric NDE of a test coupon, or the initial production weld. Brazers or brazing operators and fusing operators may not be qualified by volumetric NDE.

WELDING, BRAZING, AND FUSING DATA

The data articles include the variables grouped into categories such as joints, base materials and filler materials, positions, preheat/postweld heat treatment, gas, electrical characteristics, and technique. They are referenced from other articles as they apply to each process.

These articles are frequently misused by selecting variables that do not apply to a particular process. Variables only apply as referenced for the applicable process in Article II or III for welding, Article XII or XIII for brazing, and Article XXII or XXIII for plastic fusing. The user of Section IX should not apply any variable that is not referenced for that process.

These articles also include assignments of welding and brazing P-Numbers to particular base materials and F-Numbers to filler materials. Article IV also includes A-Number tables for reference by the Code user.

Beginning with the 1994 Addenda, welding P-Numbers, brazing P-Numbers, and nonmandatory S-Numbers were consolidated into one table identified as QW/QB-422. Both the QB-422 table (brazing P-Numbers) and Appendix C table (S-Numbers) were deleted. The new Table QW/QB-422 was divided into ferrous and nonferrous sections. Metals were listed in numerical order by material specification number to aid users in locating the appropriate grouping number. An abbreviated listing of metals grouped by P-Numbers, Nonmandatory Appendix D, has been included for users still wishing to locate groupings of metals by welding P-Number.

In the 2009 Addenda, S-Number base metals listed in the QW/QB-422 table were reassigned as P-Numbers and the S-Number listings and references were deleted.

Copyrighted material licensed to Fermi National Laboratory by Clarivate Analytics (US) LLC, subscriptions.techstreet.com, downloaded on 2020-09-23 17:45:20 +0000 by Fermi National Laboratory User.
No further reproduction or distribution is permitted.

The QW-451 and QB-451 tables for procedure qualification thickness requirements and the QW-452 and QB-452 tables for performance qualification thickness are given and may be used only as referenced by other paragraphs. Generally, the appropriate essential variables reference these tables.

Revisions to the 1980 Edition of Section IX introduced new definitions for position and added a fillet-weld orientation sketch to complement the groove-weld orientation sketch. The new revision to position indicates that a welder qualifies in the 1G, 2G, 3G, etc., position and is then qualified to weld, in production, in the F, V, H, or O positions as appropriate. QW-461.9 is a revised table that summarizes these new qualifications.

The data articles also give sketches of coupon orientations, removal of test specimens, and test jig dimensions. These are referenced by Articles I, XI, and XXI.

QW-470 describes etching processes and reagents.

Within Part QG is a list of general definitions applicable to Section IX–adopted material joining processes. These may differ slightly from other welding documents.

Nonmandatory Forms for documenting procedure and performance qualifications are provided for the aid of those who do not wish to design their own forms. Any form(s) that address all applicable requirements of Section IX may be used.

Copyrighted material licensed to Fermi National Laboratory by Clarivate Analytics (US) LLC, subscriptions.techstreet.com, downloaded on 2020-09-23 17:45:20 +0000 by Fermi National Laboratory User.
No further reproduction or distribution is permitted.

SUMMARY OF CHANGES

Errata to the BPV Code may be posted on the ASME website to provide corrections to incorrectly published items, or to correct typographical or grammatical errors in the BPV Code. Such Errata shall be used on the date posted.

Information regarding Special Notices and Errata is published by ASME at http://go.asme.org/BPVCerrata.

Changes given below are identified on the pages by a margin note, **(19)**, placed next to the affected area.

The Record Numbers listed below are explained in more detail in "List of Changes in Record Number Order" following this Summary of Changes.

Page	*Location*	*Change (Record Number)*
x	List of Sections	Updated
xii	Foreword	Penultimate paragraph revised
xiv	Statement of Policy on the Use of the ASME Single Certification Mark and Code Authorization in Advertising	Revised
xiv	Statement of Policy on the Use of ASME Marking to Identify Manufactured Items	Revised
xv	Submittal of Technical Inquiries to the Boiler and Pressure Vessel Standards Committees	In para. 4, third sentence revised
xviii	Personnel	Updated
1	QG-100	Subparagraph (b) revised *(18-2107)*
1	QG-101	In first paragraph, last sentence added *(16-2981)*
1	QG-102	Second paragraph revised *(16-2981)*
2	QG-104	Revised *(15-179, 16-2981)*
2	QG-106	First paragraph added *(16-3033)*
4	QG-107	First paragraph and subpara. (b) revised *(17-2527)*
4	QG-109.2	*(1)* Definitions of *butt-fusing pressure* and *Standard Fusing Procedure Specification (SFPS)* revised *(15-108, 15-109)* *(2)* Definitions of *clad* or *cladding*; *header*; *instantaneous power*; *instantaneous energy*; *sidewall fusion (SWF)*; and *welding gun, electron beam* added *(15-109, 16-2501, 16-2576, 17-2061)* *(3)* Definitions of *composite*, *instantaneous power or energy*, and *ferrite number* deleted *(16-2501, 16-2576, 16-2675)*
15	QW-101	Title and last paragraph added *(17-2167, 17-2168)*
15	QW-102	Title added *(17-2168)*
18	QW-161	Revised *(15-2775)*

Copyrighted material licensed to Fermi National Laboratory by Clarivate Analytics (US) LLC, subscriptions.techstreet.com, downloaded on 2020-09-23 17:45:20 +0000 by Fermi National Laboratory User.
No further reproduction or distribution is permitted.

Page	*Location*	*Change (Record Number)*
19	QW-171.3	In second paragraph, "notch-toughness" corrected by errata to "toughness" *(17-2141)*
20	QW-181.1.1	Revised *(15-2775)*
20	QW-181.2.1	First paragraph revised *(15-2775)*
23	QW-191.2	*(1)* QW-191.2.1 revised *(17-674)* *(2)* Former QW-191.2.2 deleted, and remaining paragraphs redesignated *(17-674)*
23	QW-191.4	Added *(17-674)*
24	QW-193	Revised in its entirety *(16-2262)*
25	QW-196.1.2	First paragraph revised *(13-1312)*
26	QW-196.2.1	Revised *(13-1312)*
29	QW-200	*(1)* QW-200.1(e) deleted *(16-2981)* *(2)* QW-200.2(b) and QW-200.2(e) revised *(16-2981, 17-1260)*
31	QW-202.2	Subparagraphs (a) and (b) revised *(17-1962)*
32	QW-214	Revised in its entirety *(15-2775)*
33	QW-216	New QW-216.2 added, and former QW-216.2 through QW-216.4 redesignated as QW-216.3 through QW-216.5, respectively *(15-2775)*
33	QW-217	Title and subpara. (a) revised *(16-2576)*
38	Table QW-253	Entry for QW-405.2 deleted *(17-861)*
42	Table QW-255	Entry for QW-405.2 deleted *(17-861)*
45	Table QW-256	Entry for QW-405.2 deleted *(17-861)*
48	Table QW-257	Entry for QW-405.2 deleted *(17-861)*
61	Table QW-264.2	Entries for QW-405.2 and QW-407.4 deleted *(17-861, 17-1773)*
67	QW-288	Revised in its entirety *(16-2262)*
67	QW-289	Added *(16-2647)*
72	QW-300.1	Last paragraph added *(16-2786)*
73	QW-303.5	Deleted *(16-2523)*
78	QW-381	Revised in its entirety *(15-2775, 16-2576)*
78	QW-382.1	Added, and former QW-382(a) through QW-382(e) redesignated as QW-382.1(d) through QW-382.1(h), respectively *(15-2775)*
79	QW-383.1	The word "composite" replaced with "clad material" *(16-2576)*
79	QW-387	Added *(16-2523)*
80	Table QW-388	Added *(16-2523)*
80	QW-389	Added *(16-2647)*
82	QW-402.20	Deleted *(16-2523)*
82	QW-402.30	Added *(16-2262, 16-2523)*
82	QW-402.31	Added *(16-2262, 16-2523)*
83	QW-403.5	Penultimate paragraph revised *(17-569)*

Copyrighted material licensed to Fermi National Laboratory by Clarivate Analytics (US) LLC, subscriptions.techstreet.com, downloaded on 2020-09-23 17:45:20 +0000 by Fermi National Laboratory User.
No further reproduction or distribution is permitted.

Page	*Location*	*Change (Record Number)*
83	QW-403.16	First paragraph revised *(16-2523)*
83	QW-403.18	Revised *(16-2262)*
84	QW-403.20	Revised *(17-1436)*
84	QW-403.31	Added *(16-2262, 16-2523)*
84	QW-403.32	Added *(16-2262)*
84	QW-403.33	Added *(16-2262)*
85	QW-404.5	Last paragraph revised *(17-1372, 18-1116)*
85	QW-404.10	Revised *(16-2394)*
85	QW-404.12	Revised *(17-1372)*
87	QW-404.58	Added *(16-2262, 16-2523)*
87	QW-404.59	Added *(16-2262)*
87	QW-405.2	Deleted *(17-861)*
91	QW-410.14	Revised *(17-3119)*
93	QW-410.81	Added *(16-2262)*
93	QW-410.82	Added *(16-2262)*
93	QW-410.83	Added *(16-2262)*
93	QW-410.84	Added *(16-2262)*
93	QW-410.85	Added *(16-2262)*
95	QW-420	Eighth and ninth paragraphs added *(15-1761, 18-68, 18-1933)*
97	Table QW/QB-422	*(1)* Second column head revised *(18-1932)* *(2)* "AWS B2.2M" column added *(15-1761)* *(3)* Entries revised *(17-1994, 17-1995, 17-1996, 18-902, 18-1932)* *(4)* Rows added *(16-186, 16-2020, 16-2870, 16-3136, 17-179, 17-880, 17-899, 17-1994, 17-2085, 17-2274, 17-2492, 17-3317, 18-1823)* *(5)* Rows deleted *(18-1823, 18-1932)*
170	QW-423.1	Revised *(16-1274)*
170	QW-424.1	In-text table editorially revised
171	Table QW-432	Under "Nickel and Nickel Alloys," UNS Numbers for SFA-5.14, ERNiCrMo-19, and SFA-5.11, ENiMo-11, corrected by errata *(19-196)*
183	Table QW-451.3	General Note revised *(15-2775)*
183	Table QW-451.4	General Note deleted *(15-2775)*
184	Table QW-452.1(a)	*(1)* In fourth and fifth columns, Note (3) citations deleted *(17-1992)* *(2)* Note (3) revised *(17-2962)*
185	Table QW-452.5	General Note revised *(15-2775)*
186	Table QW-453	*(1)* Entries for "Type and Number of Tests Required" revised *(15-2775)* *(2)* Notes deleted *(15-2775)*
192	Figure QW-461.7	Subcaption (b) editorially revised
194	QW-462	Last paragraph revised *(18-557)*

Copyrighted material licensed to Fermi National Laboratory by Clarivate Analytics (US) LLC, subscriptions.techstreet.com, downloaded on 2020-09-23 17:45:20 +0000 by Fermi National Laboratory User.
No further reproduction or distribution is permitted.

Page	*Location*	*Change (Record Number)*
195	Figure QW-462.1(a)	General Note added by errata *(17-2141)*
202	Figure QW-462.4(d)	General Note (b) deleted *(15-2775)*
211	Table QW-462.10(a)	Deleted *(13-1312)*
211	Table QW-462.10(b)	Deleted *(13-1312)*
211	Table QW-462.10(c)	Deleted *(13-1312)*
223	Figure QW-466.1	*(1)* Table entries corrected in their entirety by errata *(18-1309)* *(2)* General Note (d) deleted, and subsequent General Note redesignated *(15-2775)*
232	QW-540	Subparagraph (h) revised *(16-2981)*
234	QB-151.3	Revised *(17-354)*
235	QB-153	*(1)* QB-153.1(d) revised *(16-2576)* *(2)* QB-153.2 added *(17-2737)*
237	QB-200	*(1)* QB-200.1(e) deleted *(16-2981)* *(2)* QB-200.2(e) revised *(16-2981)*
238	QB-203	Title revised and first paragraph added *(17-2260)*
239	Table QB-252	Entries for QB-409.2 and QB-409.3 deleted *(17-2062)*
240	Table QB-253	Entries for QB-409.2 and QB-409.3 deleted *(17-2062)*
240	Table QB-254	Entries for QB-409.2 and QB-409.3 deleted *(17-2062)*
241	Table QB-255	Entries for QB-409.2 and QB-409.3 deleted *(17-2062)*
241	Table QB-256	Entries for QB-409.2 and QB-409.3 deleted *(17-2062)*
242	Table QB-257	Entries for QB-409.2 and QB-409.3 deleted *(17-2062)*
243	QB-303	First sentence revised *(17-2260)*
245	QB-407	Revised in its entirety *(17-2260)*
246	QB-409	QB-409.2 and QB-409.3 deleted *(17-2062)*
255	Table QB-461.3	Added *(17-2260)*
272	QF-100	Revised *(15-108)*
272	QF-131	*(1)* First paragraph, QF-131.1 title, and QF-131.1(d) revised *(15-108, 15-109)* *(2)* QF-131.3 added *(15-108)*
273	QF-132	*(1)* First paragraph, QF-132.1 title, and QF-132.1(d), QF-132.1(e), and QF-132.1(g) revised *(15-108, 15-109)* *(2)* QF-132.3 added *(15-108)*
273	QF-141	Subparagraph (b) and QF-141.1(a) revised *(15-108, 15-109)*
274	QF-142.1	Title, QF-142.1.1, and QF-142.1.3 revised *(15-108, 15-109)*
275	QF-142.3	Title, first paragraph, QF-142.3.1, and QF-142.3.4 revised *(15-108, 15-109)*
275	QF-143.1	First paragraph, QF-143.1.1, and QF-143.1.3(a) revised *(15-109)*
275	QF-143.2	Title and first paragraph revised *(15-109)*
277	QF-145	Revised *(15-109)*

Copyrighted material licensed to Fermi National Laboratory by Clarivate Analytics (US) LLC, subscriptions.techstreet.com, downloaded on 2020-09-23 17:45:20 +0000 by Fermi National Laboratory User.
No further reproduction or distribution is permitted.

Page	*Location*	*Change (Record Number)*
278	QF-145.2.1	Revised *(15-109)*
278	QF-145.2.4	Revised *(15-109)*
279	QF-201	*(1)* QF-201.1(b), QF-201.2(a), QF-201.3, QF-201.5(d), and QF-201.5(e) revised *(15-108, 15-109, 16-2981)* *(2)* QF-201.4 deleted *(16-2981)*
280	QF-202.1	QF-202.1.2, QF-202.1.3, QF-202.1.4, QF-202.1.6, and QF-202.1.7 revised *(15-108, 15-109)*
280	QF-202.2	Revised in its entirety *(15-108, 15-109)*
282	QF-221.1	Subparagraphs (f), (h), (j), and (l) revised *(15-108, 15-109)*
285	QF-221.2	Added *(15-109)*
285	Table QF-221.2	Title revised *(15-109)*
287	Table QF-254	Entry for QF-405.9 added *(15-109)*
288	Table QF-256	Added *(15-108)*
288	Table QF-257	Added *(15-109)*
289	QF-301.4	Last sentence revised *(15-109)*
289	QF-302.2	Subparagraph (c) added *(15-109)*
291	Table QF-362	Section (c) added *(15-109)*
292	QF-402.6	Added *(15-109)*
292	QF-403.7	Added *(15-109)*
292	QF-405	*(1)* QF-405.1, QF-405.2, and QF-405.3 revised *(15-109)* *(2)* QF-405.9 added *(15-109)*
293	QF-406.6	Added *(15-108)*
293	QF-406.7	Added *(15-109)*
293	QF-407.4	Added *(15-109)*
294	Table QF-452.3	Section (c) added *(15-108)*
297	Figure QF-462(a)	*(1)* Former Figure QF-462 redesignated as Figure QF-462(a) *(15-109)* *(2)* Subcaptions (b) and (c) editorially revised
298	Figure QF-462(b)	Added *(15-109)*
299	Figure QF-463	*(1)* In illustration (d), revisions inadvertently omitted from the 2017 edition added by errata *(17-2981)* *(2)* Illustration (e) added *(15-109)*
308	Form QF-482(a)	*(1)* Under "Position (QF-404)," fill-in lines corrected by errata *(17-2981)* *(2)* Title editorially reformatted
309	Form QF-482(b)	*(1)* Check boxes for "FPS qualification" corrected by errata *(17-2981)* *(2)* In title, "Form" editorially added
310	Form QF-482(c)	Added *(15-109)*
311	Form QF-483(a)	Title editorially reformatted

Copyrighted material licensed to Fermi National Laboratory by Clarivate Analytics (US) LLC, subscriptions.techstreet.com, downloaded on 2020-09-23 17:45:20 +0000 by Fermi National Laboratory User.
No further reproduction or distribution is permitted.

Page	*Location*	*Change (Record Number)*
313	Form QF-483(b)	In title, "Form" editorially added
316	Form QF-483(c)	Added *(15-109)*
318	Form QF-484(a)	Title editorially reformatted
319	Form QF-484(b)	In title, "Form" editorially added
320	Form QF-484(c)	Added *(15-109)*
321	Form QF-485	Title editorially reformatted
326	Form QW-483	On back page, under "Tensile Test (QW-150)," fill-in field added for "Alternative Tension Test Specimen Specification (QW-462)" *(16-2979)*
331	Form QB-482	Under "Base Metal (QB-402)," fill-in fields added for AWS BM-Numbers *(15-1761)*
332	Form QB-483	Under "Base Metal (QB-402)," fill-in fields added for AWS BM-Numbers *(15-1761)*
333	Form QB-484	Under "Brazing Variables (QB-350)," fill-in fields added for AWS BM-Numbers *(15-1761)*
334	Nonmandatory Appendix D	*(1)* In fourth column, "Type," "Gr.," and "Tp." deleted *(18-1932)* *(2)* Rows added *(16-186, 16-2020, 16-2870, 16-3136, 17-179, 17-880, 17-899, 17-2085, 17-2274, 17-2492, 17-3317, 18-1823)* *(3)* Rows deleted *(18-1823)*
353	Mandatory Appendix E	In "Designation" column, "(R11)" revised to "(R12)" for eight standards *(17-3282)*
357	G-100	Revised *(17-334)*
363	K-300	Subparagraph (f) revised *(16-2576)*
364	K-304	Added *(14-1439)*
365	Figure K-305	Added *(14-1439)*

Copyrighted material licensed to Fermi National Laboratory by Clarivate Analytics (US) LLC, subscriptions.techstreet.com, downloaded on 2020-09-23 17:45:20 +0000 by Fermi National Laboratory User.
No further reproduction or distribution is permitted.

LIST OF CHANGES IN RECORD NUMBER ORDER

Record Number	Change
13-1312	Revised QW-196.2.1, and deleted Tables QW-462.10(a), QW-462.10(b), and QW-462.10(c).
14-1439	Added K-304.
15-108	Added to the definition of "butt-fusing pressure" in QG-109.2. Added QF-131.3, QF-132.3, QF-142.1.1(d), QF-142.3.1(b), QF-202.2.3, QF-221.1(f), QF-406.6, and Table QF-256. Added line for ≤6 in Table QF-452.3.
15-109	Added definition of "sidewall fusion" to Part QG. Revised Part QF to add "sidewall fusing."
15-179	Revised QG-104 to delete the requirement that ranges for all variables be documented, required the record to include a statement that the test was in accordance with Section IX, and revised QW-301.4, QB-301.4, and QF-301.4 to require listing the procedure followed during the test.
15-1761	Revised Table QW/QB-422 to add AWS material classifications (BM-Numbers).
15-2775	Moved description of production assembly mockup in Table QW-451.3 General Note to QW-181.1.1. Moved description of production assembly mockup in Table QW-452.5 General Note to QW-181.2.1. Deleted references to Notes and added number and types of required tests in Table QW-453. Deleted and moved Notes (1) through (10) to QW-214.1 and QW-216.1. Deleted General Note (b) in Figure QW-462.4(d). Added QW-381 and QW-382.
16-186	Added A/SA-276 Type 314, UNS S31400 to Table QW/QB-422 and Nonmandatory Appendix D.
16-1274	Revised QW-423.1 text and table headings.
16-2020	Added A/SA-995 Grade 5A, UNS J93404 to Table QW/QB-422 and Nonmandatory Appendix D.
16-2262	Revised QW-193 and QW-288 to arrange essential variables into a tabular format for both procedure and performance qualifications. Added or revised variables in Article IV to accommodate this revision.
16-2394	Revised QW-404.10 to omit reference to Authorized Inspector.
16-2501	Deleted definition of "instantaneous power or energy," and added definitions for "instantaneous power" and "instantaneous energy" in QG-109.2.
16-2523	Deleted QW-303.5 and replaced it with new QW-387. Arranged performance qualification essential variables from QW-193, QW-288, and QW-303.5 into a tabular format in new Table QW-387. Added or revised variables in Article IV to accommodate this revision.
16-2576	Revised QG-109.2 to add definition of "clad, cladding," and deleted "composite" from definitions. Revised QW-217 title, and deleted "composite" in QW-381.2, QW-383.1(a) and QW-383.1(b), QB-153.1(d), and Nonmandatory Appendix K to change terminology to meet new cladding definition and clad brazing sheet definition.
16-2647	Added provisions to both procedure and performance qualification to allow use of low-energy capacitor discharge welding.
16-2675	Deleted the definition of "ferrite number" from QG-109.2.
16-2786	Added new paragraph to QW-300.1.
16-2870	Assigned P-No. 1, Grade 1 for three grades of A/SA 1011 to Table QW/QB-422 and Nonmandatory Appendix D.
16-2979	Revised QW-483.
16-2981	Revised QG-101, QG-102, QG-104, QW-200.2(e), QB-200.2(e), QW-540(h), and QF-201.5(e) to remove references to the "Authorized Inspector" and clarify the need to ensure the availability of procedure qualification records and performance qualification records when required for review and reference. Deleted QW-200.1(e), QB-200.1(e), and QF-201.4.
16-3033	Revised QG-106 to require that the individuals who provide supervision and control over the personnel who join qualification coupons be shown by the organization to be qualified, trained, or experienced to perform the oversight defined.
16-3136	Added C70620 and C71520 base metals listed in the subject file to Table QW/QB-422 and Nonmandatory Appendix D.
17-179	Assigned P-No. 15E, Grade 1 to A1091, Grade 91 castings in Table QW/QB-422 and Nonmandatory Appendix D.
17-334	Revised the first sentence in G-100 to change the term "Nonmandatory Appendix" to "Section."

Copyrighted material licensed to Fermi National Laboratory by Clarivate Analytics (US) LLC, subscriptions.techstreet.com, downloaded on 2020-09-23 17:45:20 +0000 by Fermi National Laboratory User.
No further reproduction or distribution is permitted.

Record Number	Change
17-354	Revised QB-151.3 to clarify how to calculate the cross-sectional area.
17-569	Revised QW-403.5(c) to clarify qualification for Group Numbers within the same P-Number.
17-674	Revised QW-191.2.1(b), deleted QW-191.2.1(c) and QW-191.2.2, redesignated QW-191.2.3 as QW-191.2.2, redesignated QW-191.2.4 as QW-191.2.3, and added QW-191.4, which references ASME Section V, Article 1 for qualification and certification requirements applicable to all volumetric examination personnel.
17-861	Deleted QW-405.2 and references to it in QW-250 tables.
17-880	Added A/SA-182, Grade F310H, UNS S31009 to Table QW/QB-422 and Nonmandatory Appendix D.
17-899	Added A/SA-841, Grade F, Classes 6 and 7 to Table QW/QB-422 and Nonmandatory Appendix D.
17-1260	Revised QW-200.2(b).
17-1372	Changed “designation” to “name” in QW-404.5(d) and QW-404.12.
17-1436	Revised QW-403.20 to align it with QW-403.11 for overlay welding when the chemical composition of the deposit is not specified.
17-1773	Deleted QW-407.4 from Table QW-264.2.
17-1962	Revised QW-202.2 to add requirements addressing qualified base metal and weld metal thickness ranges when dissimilar thickness test coupons are used and to clarify that the thickness, *t*, of deposited weld metal in QW-451 must be exclusive of weld reinforcement.
17-1992	Removed reference to Note (3) in two places in Table QW-452.1(a).
17-1994	Added B/SB-443, Grade 1 and B/SB-446, Grade 1 with revised product form; added B/SB-704, Grade 2, and B/SB-705, Grade 2; revised B/SB-366 minimum specified tensile strength; revised B/SB-443 and B/SB-446 product form; and revised B/SB-704 and B/SB-705 Grade in Table QW/QB-422 for UNS N06625.
17-1995	Revised nominal composition for all UNS N08367 listings in Table QW/QB-422.
17-1996	Revised tensile values of A/SA-182, Grade F91 and A/SA-336, Grade F91.
17-2061	Added definition to QG-109.
17-2062	Deleted QB-409.2 and QB-409.3.
17-2085	Added A/SA-213 UNS S31254 to Table QW/QB-422 and Nonmandatory Appendix D.
17-2141	Errata correction. See Summary of Changes for details.
17-2167	Added a paragraph to the end of QW-101 to address the documentation of variables outside the scope of a WPS or PQR or already addressed within the information for other variables.
17-2168	Added paragraph headers to QW-101 and QW-102 following the same headers as QG-101 and QG-103.
17-2260	Revised QB-203, QB-303, and QB-407, and added Table QB-461.3 for greater clarity of intent regarding brazing flow positions.
17-2274	Added A/SA-553, Type III to Table QW/QB-422 and Nonmandatory Appendix D.
17-2492	Added grades from CSA Z245.1, CSA Z245.11, and CSA Z245.12 to Table QW/QB-422 and Nonmandatory Appendix D.
17-2527	Revised QG-107.
17-2737	Revised QB-153 to address unassigned base metals.
17-2962	Revised Note (3) of Table QW-452.1(a) to clarify what bend specimen substitutions could be made when welding in the 5G, 6G, or combination of 2G and 5G positions.
17-2981	Errata correction. See Summary of Changes for details.
17-3119	Revised QW-410.14.
17-3282	Revised “R11” to “R12” in the following SWPSs: B2.1-1-210-2001, B2.1-1-211-2001, B2.1-8-024-2001, B2.1-8-025-2001, B2.1-8-213-97, B2.1-8-215-2001, B2.1-8-214-2001, and B2.1-8-216-2001.
17-3317	Added product form to Table QW/QB-422 for UNS K92460.
18-68	Added eighth paragraph in QW-420.
18-557	Revised QW-462 to state any tension specimen geometry is acceptable as long as it meets a welding standard and the cross section can be measured so that an ultimate tensile strength can be determined. Deleted the list of references to various specifications.
18-902	Revised Table QW/QB-422 contents in Spec. No. column for all SA/EN and SB/EN listings.
18-1116	Added the word “by” in two places to improve clarity.

Copyrighted material licensed to Fermi National Laboratory by Clarivate Analytics (US) LLC, subscriptions.techstreet.com, downloaded on 2020-09-23 17:45:20 +0000 by Fermi National Laboratory User.
No further reproduction or distribution is permitted.

Record Number	Change
18-1309	Errata correction. See Summary of Changes for details.
18-1823	Revised records 16-186, 16-2870, 17-899, 17-1994, 17-2492, and 17-2879.
18-1932	Revised Table QW/QB-422 Type or Grade column title for ferrous materials. Revised Type or Grade entries containing “Type,” “Tp.,” “Grade,” and “Gr.” identifiers. Revised ISO 15608 Group for A/SA-1011 SS 36. Revised type and product form and deleted Type S32205 for A/SA-276. Revised Nonmandatory Appendix D Type, Grade, Alloy column.
18-1933	Revised QW-420.
18-2107	Added the word “qualification” to QG-100(b).
19-196	Errata correction. See Summary of Changes for details.

Copyrighted material licensed to Fermi National Laboratory by Clarivate Analytics (US) LLC, subscriptions.techstreet.com, downloaded on 2020-09-23 17:45:20 +0000 by Fermi National Laboratory User.
No further reproduction or distribution is permitted.

CROSS-REFERENCING AND STYLISTIC CHANGES IN THE BOILER AND PRESSURE VESSEL CODE

There have been structural and stylistic changes to BPVC, starting with the 2011 Addenda, that should be noted to aid navigating the contents. The following is an overview of the changes:

Subparagraph Breakdowns/Nested Lists Hierarchy

- First-level breakdowns are designated as (a), (b), (c), etc., as in the past.
- Second-level breakdowns are designated as (1), (2), (3), etc., as in the past.
- Third-level breakdowns are now designated as (-a), (-b), (-c), etc.
- Fourth-level breakdowns are now designated as (-1), (-2), (-3), etc.
- Fifth-level breakdowns are now designated as (+a), (+b), (+c), etc.
- Sixth-level breakdowns are now designated as (+1), (+2), etc.

Footnotes

With the exception of those included in the front matter (roman-numbered pages), all footnotes are treated as endnotes. The endnotes are referenced in numeric order and appear at the end of each BPVC section/subsection.

Submittal of Technical Inquiries to the Boiler and Pressure Vessel Standards Committees

Submittal of Technical Inquiries to the Boiler and Pressure Vessel Standards Committees has been moved to the front matter. This information now appears in all Boiler Code Sections (except for Code Case books).

Cross-References

It is our intention to establish cross-reference link functionality in the current edition and moving forward. To facilitate this, cross-reference style has changed. Cross-references within a subsection or subarticle will not include the designator/identifier of that subsection/subarticle. Examples follow:

- *(Sub-)Paragraph Cross-References.* The cross-references to subparagraph breakdowns will follow the hierarchy of the designators under which the breakdown appears.
  - If subparagraph (-a) appears in X.1(c)(1) and is referenced in X.1(c)(1), it will be referenced as (-a).
  - If subparagraph (-a) appears in X.1(c)(1) but is referenced in X.1(c)(2), it will be referenced as (1)(-a).
  - If subparagraph (-a) appears in X.1(c)(1) but is referenced in X.1(e)(1), it will be referenced as (c)(1)(-a).
  - If subparagraph (-a) appears in X.1(c)(1) but is referenced in X.2(c)(2), it will be referenced as X.1(c)(1)(-a).
- *Equation Cross-References.* The cross-references to equations will follow the same logic. For example, if eq. (1) appears in X.1(a)(1) but is referenced in X.1(b), it will be referenced as eq. (a)(1)(1). If eq. (1) appears in X.1(a)(1) but is referenced in a different subsection/subarticle/paragraph, it will be referenced as eq. X.1(a)(1)(1).

Copyrighted material licensed to Fermi National Laboratory by Clarivate Analytics (US) LLC, subscriptions.techstreet.com, downloaded on 2020-09-23 17:45:20 +0000 by Fermi National Laboratory User.
No further reproduction or distribution is permitted.

PART QG
GENERAL REQUIREMENTS

(19) ## QG-100 SCOPE

(a) This Section contains requirements for the qualification of welders, welding operators, brazers, brazing operators, plastic fusing operators, and the material joining processes they use during welding, brazing, and fusing operations for the construction of components under the rules of the ASME Boiler and Pressure Vessel Code, the ASME B31 Codes for Pressure Piping, and other Codes, standards, and specifications that reference this Section. This Section is divided into four parts.

(1) Part QG contains general requirements for all material-joining processes.

(2) Part QW contains requirements for welding.

(3) Part QB contains requirements for brazing.

(4) Part QF contains requirements for plastic fusing.

(b) Whenever the referencing Code, standard, or specification imposes qualification requirements different than those given in this Section, the requirements of the referencing Code, standard, or specification shall take precedence over the requirements of this Section.

(c) Some of the more common terms relating to material joining processes are defined in QG-109. Whenever the word "pipe" is used, "tube" shall also be applicable.

(d) New editions to Section IX may be used beginning with the date of issuance and becomes mandatory 6 months after the date of issuance.

(e) Code Cases are permissible and may be used, beginning with the date of approval by ASME. Only Code Cases that are specifically identified as being applicable to this Section may be used. At the time a Code Case is applied, only the latest revision may be used. Code Cases that have been incorporated into this Section or have been annulled shall not be used for new qualifications, unless permitted by the referencing Code. Qualifications using the provisions of a Code Case remain valid after the Code Case is annulled. The Code Case number shall be listed on the qualification record(s).

(f) Throughout this Section, references are made to various non-ASME documents. Unless a specific date is referenced, the latest edition of the reference document in effect at the time of performance or procedure qualification is to be used.

(19) ## QG-101 PROCEDURE SPECIFICATION

A procedure specification is a written document providing direction to the person applying the material joining process. Details for the preparation and qualification of procedure specifications for welding (WPS), brazing (BPS), and fusing (FPS) are given in the respective Parts addressing those processes. Procedure specifications used by an *organization* (see QG-109.2) having responsibility for operational control of material joining processes shall have been qualified by that organization, or shall be a standard procedure specification acceptable under the rules of the applicable Part for the joining process to be used. Procedure specifications shall be available for reference and review at the fabrication site.

Procedure specifications address the conditions (including ranges, if any) under which the material joining process must be performed. These conditions are referred to in this Section as "variables." When a procedure specification is prepared by the organization, it shall address, as a minimum, the specific essential and nonessential variables that are applicable to the material joining process to be used in production. When the referencing Code, standard, or specification requires toughness qualification of the material joining procedure, the applicable supplementary essential variables shall also be addressed in the procedure specification.

QG-102 PROCEDURE QUALIFICATION RECORD (19)

The purpose of qualifying the procedure specification is to demonstrate that the joining process proposed for construction is capable of producing joints having the required mechanical properties for the intended application. Qualification of the procedure specification demonstrates the mechanical properties of the joint made using a joining process, and not the skill of the person using the joining process.

The procedure qualification record (PQR) documents what occurred during the production of a procedure qualification test coupon and the results of testing that coupon. As a minimum, the PQR shall document the essential procedure qualification test variables applied during production of the test joint, and the results of the required tests. When toughness testing is required for qualification of the procedure specification, the applicable supplementary essential variables shall be recorded for each process. The organization shall certify the PQR by a signature or other means as described in the organization's Quality Control System. The PQR shall be available for review. A procedure specification may be supported by one or more PQR(s), and one PQR may be used to support one or more procedure specification(s).

Copyrighted material licensed to Fermi National Laboratory by Clarivate Analytics (US) LLC, subscriptions.techstreet.com, downloaded on 2020-09-23 17:45:20 +0000 by Fermi National Laboratory User.
No further reproduction or distribution is permitted.

QG-103 PERFORMANCE QUALIFICATION

The purpose of qualifying the person who will use a joining process is to demonstrate that person's ability to produce a sound joint when using a procedure specification.

(19) QG-104 PERFORMANCE QUALIFICATION RECORD

The performance qualification record documents what occurred during the production of a test coupon by a person using one or more joining processes following an organization's procedure specification. As a minimum, the record shall document

(a) the essential variables for each process used to produce the test coupon

(b) the ranges of variables qualified as required by the applicable part (see QW-301.4, QB-301.4, and QF-301.4)

(c) the results of the required testing and nondestructive examinations

(d) the identification of the procedure specification(s) followed during the test

The organization shall state on the record that the performance qualification test was conducted in accordance with the requirements of this Section, and certify the record by a signature or other means as described in the organization's Quality Control System. Performance qualification records shall be available for review.

QG-105 VARIABLES

QG-105.1 Essential Variables (Procedure). Essential variables are conditions in which a change, as described in the specific variables, is considered to affect the mechanical properties (other than toughness) of the joint. Before using a procedure specification whose essential variables have been revised and fall outside their qualified range, the procedure specification must be requalified. Procedure qualification records may be changed when a procedure qualification test supporting the change has been completed, or when an editorial revision is necessary to correct an error, as permitted by the rules of the Part applicable to the material-joining process.

QG-105.2 Essential Variables (Performance). Essential variables are conditions in which a change, as described in the specific variable list, will affect the ability of the person to produce a sound joint.

QG-105.3 Supplementary Essential Variables. Supplementary essential variables are conditions in which a change will affect the toughness properties of the joint, heat-affected zone, or base material. Supplementary essential variables become additional essential variables in situations where procedure qualifications require toughness testing. When procedure qualification does not require the addition of toughness testing, supplementary essential variables are not applicable. See QW-401.1.

QG-105.4 Nonessential Variables. Nonessential variables are conditions in which a change, as described in the specific variables, is not considered to affect the mechanical properties of the joint. These variables shall be addressed in the procedure specification, as required by QG-101.

A procedure specification may be editorially revised to change a nonessential variable to fall outside of its previously listed range, but does not require requalification of the procedure specification.

QG-105.5 Special Process Variables. Special process variables are conditions that apply only to special processes that are described in the Part that addresses those processes. When these special processes are used, only the applicable special process variables shall apply.

QG-105.6 Applicability. The applicable essential, supplementary essential, nonessential, and special process variables for a specific joining process are given in the Part addressing that joining process.

QG-106 ORGANIZATIONAL RESPONSIBILITY (19)

Personnel performing supervisory activities specified in this Section shall

(a) be designated by the organization with responsibility for certifying qualification documents.

(b) have a satisfactory level of competence in accordance with the organization's quality program. As a minimum, they shall be qualified by education, experience, or training in the following areas:

(1) knowledge of the requirements of this Section for the qualification of procedures and/or joining personnel

(2) knowledge of the organization's quality program

(3) the scope, complexity, or special nature of the activities to which oversight is to be provided

(c) have a record, maintained by the organization, containing objective evidence of the qualifications, training, or experience.

QG-106.1 Procedure Qualifications. Each organization is responsible for conducting the tests required by this Section to qualify the procedures that are used in the construction of components under the rules of the Codes, standards, and specifications that reference this Section.

(a) The personnel who produce test joints for procedure qualification shall be under the full supervision and control of the qualifying organization during the production of these test joints. The persons producing test joints for the qualification of procedures shall be either direct employees or shall be personally engaged by contract for material-joining services.

(b) Production of qualification test joints under the supervision and control of another organization is not permitted. However, it is permitted to subcontract any or all of the work necessary for preparing the materials to be joined, the subsequent work for preparing test specimens from the completed test joint, and the

Copyrighted material licensed to Fermi National Laboratory by Clarivate Analytics (US) LLC, subscriptions.techstreet.com, downloaded on 2020-09-23 17:45:20 +0000 by Fermi National Laboratory User.
No further reproduction or distribution is permitted.

performance of nondestructive examination and mechanical tests, provided the organization accepts full responsibility for any such work.

(c) If the effective operational control of procedure qualifications for two or more companies of different names exists under the same corporate ownership, the companies involved shall describe in their Quality Control System or Quality Assurance Program the operational control of procedure qualifications. In this case, separate procedure qualifications are not required, provided all other requirements of this Section are met.

QG-106.2 Performance Qualifications. Each organization is responsible for the supervision and control of material joining performed by persons for whom they have operational responsibility and control. The organization shall conduct the tests required by this Section to qualify the performance of those persons with each joining process they will use for the construction of components under the rules of the Codes, standards, and specifications that reference this Section. This requirement ensures that the qualifying organization has determined that the personnel using its procedures are capable of achieving the minimum requirements specified for an acceptable joint. This responsibility cannot be delegated to another organization.

(a) The personnel who produce test joints for performance qualification shall be tested under the full supervision and control of the qualifying organization.

(b) The performance qualification test shall be performed following either a qualified procedure specification or a standard procedure specification acceptable under the rules of the applicable Part for the joining process. The Part addressing any specific joining process may exempt a portion of the procedure specification from being followed during production of the performance qualification test coupon.

(c) Production of test joints under the supervision and control of another organization is not permitted. It is permitted to subcontract any or all of the work necessary for preparing the materials to be joined in the test joint, and the subsequent work for preparing test specimens from the completed test joint, and the performance of nondestructive examination and mechanical tests, provided the organization accepts full responsibility for any such work.

(d) The performance qualification test may be terminated at any stage, whenever it becomes apparent to the supervisor conducting the tests that the person being tested does not have the required skill to produce satisfactory results.

(e) When a procedure qualification test coupon has been tested and found acceptable, the person who prepared the test coupon is also qualified for the joining process used, within the ranges specified for performance qualification for the applicable process(es).

(f) Persons who are successfully qualified shall be assigned an identifying number, letter, or symbol by the organization, which shall be used to identify their work.

(g) If effective operational control of performance qualifications for two or more companies of different names exists under the same corporate ownership, the companies involved shall describe in their Quality Control System or Quality Assurance Program, the operational control of performance qualifications. In this case, requalification of persons working within the companies of such an organization are not required, provided all other requirements of this Section are met.

QG-106.3 Simultaneous Performance Qualifications. Organizations may participate in an association to collectively qualify the performance of one or more persons for material-joining processes simultaneously and may share performance qualification information with other participating organizations within the association. When simultaneous performance qualifications are conducted, each participating organization shall be represented by an employee with designated responsibility for performance qualifications.

(a) The essential variables of the procedure specifications to be followed during simultaneous performance qualifications shall be compared by the participating organizations, and shall be identical, except as otherwise provided in the Part addressing the specific joining method. The qualified thickness ranges need not be identical but shall include the test coupon thickness.

(b) Alternatively, the participating organizations shall agree to follow a single procedure specification that has been reviewed and accepted by each participating organization. Each participating organization shall have a supporting PQR or shall have accepted responsibility for using a standard procedure specification having a range of variables consistent with those to be followed during the performance qualification test, in accordance with the applicable Part for the jointing method.

(c) Each participating organization's representative shall

(1) positively identify the person whose performance is to be tested

(2) verify the markings on the test coupon correspond to the person's identification

(3) verify that the positional orientation markings on the test coupon reflect the test position of the coupon as required to identify the location of test specimen removal

(4) perform a visual examination of each completed test coupon and each test specimen to determine its acceptability

(-a) When the test coupon(s) is prepared and the test specimens are mechanically tested by an independent laboratory, the laboratory's report may be used as the basis for accepting the test methods and their results.

Copyrighted material licensed to Fermi National Laboratory by Clarivate Analytics (US) LLC, subscriptions.techstreet.com, downloaded on 2020-09-23 17:45:20 +0000 by Fermi National Laboratory User.
No further reproduction or distribution is permitted.

(-b) When the test coupon(s) is examined by volumetric examination, the examining organization's report may be used as the basis for acceptance of the test methods, qualification and certification of the examiner, and the results of the examination.

(5) prepare and certify a performance qualification record for each person qualified

(d) When the qualified person changes employers between participating organizations, the employing organization shall verify the continuity of the person's qualifications has been maintained by previous employers since his qualification date, as required by the applicable Part for the joining method. Evidence of activities supporting performance qualification continuity may be obtained from any member of the association, even if the member was not a participant in the simultaneous welder qualifications.

(e) If a person has had their performance qualification revoked for specific reasons, the employing organization shall notify all other participating organizations that the person's qualification(s) has been revoked. The remaining participating organizations shall determine whether they will uphold or revoke the performance qualifications for that person in accordance with this Section.

(f) When a person's performance qualifications are collectively renewed in accordance with the applicable Part for the joining method, the testing procedures shall follow the rules of this paragraph.

(19) QG-107 OWNERSHIP TRANSFERS

Organizations may maintain effective operational control of PQRs, procedure specifications, and performance qualification records under different ownership than existed during the original procedure qualification. Multiple organizations under a common ownership may use PQRs, procedure specifications, and performance qualification records under that owner's name. The Quality Control System or Quality Assurance Program of each organization shall describe the effective operational control and authority for technical direction of welding.

When an organization or some part thereof is acquired by a new owner(s), the PQRs, procedure specifications, and performance qualification records may remain valid for use by the new owner(s) without requalification; and the new owner(s) PQRs, procedure specifications, and performance qualification records become valid for use by the acquired organization, provided all of the following requirements have been met:

(a) The new owner(s) takes responsibility for the procedure specifications and performance qualification records.

(b) The procedure specifications identify the name of the new owner(s) prior to use.

(c) The Quality Control System or Quality Assurance Program documents the original source of the PQRs, procedure specifications, and performance qualification records as being from the original qualifying organization.

QG-108 QUALIFICATIONS MADE TO PREVIOUS EDITIONS

Joining procedures, procedure qualifications, and performance qualifications that were made in accordance with Editions and Addenda of this Section as far back as the 1962 Edition may be used in any construction for which the current Edition has been specified.

Joining procedures, procedure qualifications, and performance qualifications that were made in accordance with Editions and Addenda of this Section prior to the 1962 Edition may be used in any construction for which the current Edition has been specified provided the requirements of the 1962 Edition or any later edition have been met.

Procedure specifications, PQRs, and performance qualification records meeting the above requirements do not require amendment to include any variables required by later Editions and Addenda, except as specified in QW-420. Qualification of new procedure specifications for joining processes, and performance qualifications for persons applying them, shall be in accordance with the current Edition of Section IX.

QG-109 DEFINITIONS

QG-109.1 GENERAL

Definitions of the more common terms relating to material-joining processes are defined in QG-109.2. There are terms listed that are specific to ASME Section IX and are not presently defined in AWS A3.0. Several definitions have been modified slightly from AWS A3.0 so as to better define the context or intent as used in ASME Section IX.

QG-109.2 DEFINITIONS (19)

arc seam weld: a seam weld made by an arc welding process.

arc spot weld: a spot weld made by an arc welding process.

arc strike: any inadvertent discontinuity resulting from an arc, consisting of any localized remelted metal, heat-affected metal, or change in the surface profile of any metal object. The arc may be caused by arc welding electrodes, magnetic inspection prods, or frayed electrical cable.

arc welding: a group of welding processes wherein coalescence is produced by heating with an arc or arcs, with or without the application of pressure, and with or without the use of filler metal.

as-brazed: adj. pertaining to the condition of brazements after brazing, prior to any subsequent thermal, mechanical, or chemical treatments.

Copyrighted material licensed to Fermi National Laboratory by Clarivate Analytics (US) LLC, subscriptions.techstreet.com, downloaded on 2020-09-23 17:45:20 +0000 by Fermi National Laboratory User.
No further reproduction or distribution is permitted.

as-welded: adj. pertaining to the condition of weld metal, welded joints, and weldments after welding but prior to any subsequent thermal, mechanical, or chemical treatments.

backgouging: the removal of weld metal and base metal from the weld root side of a welded joint to facilitate complete fusion and complete joint penetration upon subsequent welding from that side.

backhand welding: a welding technique in which the welding torch or gun is directed opposite to the progress of welding.

backing: a material placed at the root of a weld joint for the purpose of supporting molten weld metal so as to facilitate complete joint penetration. The material may or may not fuse into the joint. See also *retainer*.

backing gas: a gas, such as argon, helium, nitrogen, or reactive gas, which is employed to exclude oxygen from the root side (opposite from the welding side) of weld joints.

base metal: the metal or alloy that is welded, brazed, or cut.

bead-up cycle: part of the butt-fusing process to ensure complete contact between the heater surface and the pipe ends. The bead-up cycle begins when initial contact of the pipe ends to the heater is made at butt-fusing pressure until an indication of melt is observed around the pipe circumference.

bond line (brazing and thermal spraying): the cross section of the interface between a braze or thermal spray deposit and the substrate.

braze: a joint produced by heating an assembly to suitable temperatures and by using a filler metal having a liquidus above 840°F (450°C) and below the solidus of the base materials. The filler metal is distributed between the closely fitted surfaces of the joint by capillary action.

brazer: one who performs a manual or semiautomatic brazing operation.

brazing: a group of metal joining processes which produces coalescence of materials by heating them to a suitable temperature, and by using a filler metal having a liquidus above 840°F (450°C) and below the solidus of the base materials. The filler metal is distributed between the closely fitted surfaces of the joint by capillary action.

brazing operator: one who operates machine or automatic brazing equipment.

brazing temperature: the temperature to which the base metal(s) is heated to enable the filler metal to wet the base metal(s) and form a brazed joint.

brazing temperature range: the temperature range within which brazing can be conducted.

brazing, automatic: brazing with equipment which performs the brazing operation without constant observation and adjustment by a brazing operator. The equipment may or may not perform the loading and unloading of the work.

brazing, block (BB): a brazing process that uses heat from heated blocks applied to the joint. This is an obsolete or seldom used process.

brazing, dip (DB): a brazing process in which the heat required is furnished by a molten chemical or metal bath. When a molten chemical bath is used, the bath may act as a flux; when a molten metal bath is used, the bath provides the filler metal.

brazing, furnace (FB): a brazing process in which the workpieces are placed in a furnace and heated to the brazing temperature.

brazing, induction (IB): a brazing process that uses heat from the resistance of the workpieces to induced electric current.

brazing, machine: brazing with equipment which performs the brazing operation under the constant observation and control of a brazing operator. The equipment may or may not perform the loading and unloading of the work.

brazing, manual: a brazing operation performed and controlled completely by hand. See also *automatic brazing* and *machine brazing*.

brazing, resistance (RB): a brazing process that uses heat from the resistance to electric current flow in a circuit of which the workpieces are a part.

brazing, semiautomatic: brazing with equipment which controls only the brazing filler metal feed. The advance of the brazing is manually controlled.

brazing, torch (TB): a brazing process that uses heat from a fuel gas flame.

build-up of base metal (restoration of base metal thickness): this is the application of a weld material to a base metal so as to restore the design thickness and/or structural integrity. This build-up may be with a chemistry different from the base metal chemistry which has been qualified via a standard butt-welded test coupon. Also, may be called base metal repair or buildup.

butt joint: a joint between two members aligned approximately in the same plane.

butt-fusing cycle: pressure–time diagram for a defined fusing temperature, representing the entire fusing operation.

butt-fusing pressure: the sum of the theoretical butt-fusing pressure plus the drag pressure. This is verified by the gauge pressure used by the fusing operator on the butt-

Copyrighted material licensed to Fermi National Laboratory by Clarivate Analytics (US) LLC, subscriptions.techstreet.com, downloaded on 2020-09-23 17:45:20 +0000 by Fermi National Laboratory User.
No further reproduction or distribution is permitted.

fusing machine to join the pipe ends or by applied torque when torque verification is required by the fusing procedure specification (FPS).

butt fusion (BF): fusing accomplished by heating the ends of polyethylene pipes above their melting point using a contact heater, then removing the heater and applying pressure necessary to achieve coalescence of the molten polyethylene materials during the cooling phase. Some of the more common terms relating to BF are defined in ASTM F412.

buttering: the addition of material, by welding, on one or both faces of a joint, prior to the preparation of the joint for final welding, for the purpose of providing a suitable transition weld deposit for the subsequent completion of the joint.

clad or cladding: weld metal overlay or bonded corrosion-resistant material added to a metal surface.

clad brazing sheet: a metal sheet on which one or both sides are clad with brazing filler metal.

coalescence: the growing together or growth into one body of the materials being joined.

complete fusion: fusion which has occurred over the entire base material surfaces intended for welding, and between all layers and beads.

consumable insert: filler metal that is placed at the joint root before welding, and is intended to be completely fused into the root to become part of the weld.

contact tube: a device which transfers current to a continuous electrode.

control method (FSW): the manner of monitoring and controlling the position of the rotating tool with respect to the weld joint during the friction stir welding process.

control method, force (FSW): a control method that uses a force set point, such as plunge force or travel force, to control the tool position. Under the force control method, the plunge depth or travel speed can vary, within a specified range, during welding.

control method, position (FSW): a control method that uses a set plunge position relative to the plate surface to control the tool position. Under the position control method, the plunge force can vary, within a specified range, during welding.

control method, travel (FSW): a control method that uses a set travel speed to control the tool position. Under the travel control method, the travel force can vary, within a specified range, during welding.

control specimen: a section from the base material tested to determine its tensile strength for the purpose of comparing to the tensile strength of the fused joint.

cool time at butt-fusing pressure: the minimum time that the butt-fusing pressure shall be maintained between the pipe faces while the pipe joint cools. This is a function of the wall thickness.

corner joint: a joint between two members located approximately at right angles to each other in the form of an L.

coupon: see *test coupon*.

crack: a fracture-type discontinuity characterized by a sharp tip and high ratio of length and width to opening displacement.

creep strength enhanced ferritic alloys (CSEF's): a family of ferritic steels whose creep temperature strength is enhanced by the creation of a precise condition of microstructure, specifically martensite or bainite, which is stabilized during tempering by controlled precipitation of temper-resistant carbides, carbo-nitrides, or other stable and/or meta-stable phases.

data acquisition record: a detailed, permanent record of variables applicable to the fusing process, such as butt-fusion pressure, electrofusion voltage, and cycle cool-down times, along with the measured heater surface temperature, employee information, butt-fusing or electrofusion machine information, pipe information, date, and time for each joint made.

defect: a discontinuity or discontinuities that by nature or accumulated effect (for example, total crack length) render a part or product unable to meet minimum applicable acceptance standards or specifications. This term designates rejectability. See also *discontinuity* and *flaw*.

direct current electrode negative (DCEN): the arrangement of direct current arc welding leads in which the electrode is the negative pole and the workpiece is the positive pole of the welding arc.

direct current electrode positive (DCEP): the arrangement of direct current arc welding leads in which the electrode is the positive pole and the workpiece is the negative pole of the welding arc.

discontinuity: an interruption of the typical structure of a material, such as a lack of homogeneity in its mechanical, metallurgical, or physical characteristics. A discontinuity is not necessarily a defect. See also *defect* and *flaw*.

double-welded joint: a joint that is welded from both sides.

double-welded lap joint: a lap joint in which the overlapped edges of the members to be joined are welded along the edges of both members.

drag pressure: the pressure required to overcome the drag resistance and frictional resistance in the butt-fusing machine and keep the carriage moving at its slowest speed.

Copyrighted material licensed to Fermi National Laboratory by Clarivate Analytics (US) LLC, subscriptions.techstreet.com, downloaded on 2020-09-23 17:45:20 +0000 by Fermi National Laboratory User.
No further reproduction or distribution is permitted.

drag resistance: force-opposing movement of the movable clamp of the butt-fusing machine due to the weight of the pipe.

dwell: the time during which the energy source pauses at any point in each oscillation.

electrode, arc welding: a component of the welding circuit through which current is conducted.

electrode, bare: a filler metal electrode that has been produced as a wire, strip, or bar with no coating or covering other than that incidental to its manufacture or provided for purposes of preservation, feeding, or electrical contact.

electrode, carbon: a nonfiller material electrode used in arc welding and cutting, consisting of a carbon or graphite rod, which may be coated with copper or other materials.

electrode, composite: a generic term of multicomponent filler metal electrodes in various physical forms, such as stranded wires, tubes, and covered electrodes.

electrode, covered: a composite filler metal electrode consisting of a core of a bare electrode or metal-cored electrode to which a covering sufficient to provide a slag layer on the weld metal has been applied. The covering may contain materials providing such functions as shielding from the atmosphere, deoxidation, and arc stabilization, and can serve as a source of metallic additions to the weld.

electrode, electroslag welding: a filler metal component of the welding circuit through which current is conducted between the electrode guiding member and the molten slag.

NOTE: Bare electrodes and composite electrodes as defined under arc welding electrode are used for electroslag welding. A consumable guide may also be used as part of the electroslag welding electrode system.

electrode, emissive: a filler metal electrode consisting of a core of a bare electrode or a composite electrode to which a very light coating has been applied to produce a stable arc.

electrode, flux-cored: a composite filler metal electrode consisting of a metal tube or other hollow configuration containing ingredients to provide such functions as shielding atmosphere, deoxidation, arc stabilization, and slag formation. Alloying materials may be included in the core. External shielding may or may not be used.

electrode, lightly coated: a filler metal electrode consisting of a metal wire with a light coating applied subsequent to the drawing operation, primarily for stabilizing the arc.

electrode, metal: a filler or nonfiller metal electrode used in arc welding and cutting that consists of a metal wire or rod that has been manufactured by any method and that is either bare or covered.

electrode, metal-cored: a composite filler metal electrode consisting of a metal tube or other hollow configuration containing alloying ingredients. Minor amounts of ingredients providing such functions as arc stabilization and fluxing of oxides may be included. External shielding gas may or may not be used.

electrode, resistance welding: the part of a resistance welding machine through which the welding current and, in most cases, force are applied directly to the workpiece. The electrode may be in the form of a rotating wheel, rotating roll, bar, cylinder, plate, clamp, chuck, or modification thereof.

electrode, stranded: a composite filler metal electrode consisting of stranded wires which may mechanically enclose materials to improve properties, stabilize the arc, or provide shielding.

electrode, tungsten: a nonfiller metal electrode used in arc welding, arc cutting, and plasma spraying, made principally of tungsten.

electrofusion (EF): fusing accomplished by heating polyethylene materials above their melting points using electric elements within a confined space, producing temperatures and pressures necessary to achieve coalescence of the molten polyethylene materials during the cooling phase. Some of the more common terms relating to EF are defined in ASTM F1290 and ASTM F412.

electrofusion manufacturer: the manufacturer of electrofusion fittings.

face feed: the application of filler metal to the face side of a joint.

filler metal: the metal or alloy to be added in making a welded, brazed, or soldered joint.

filler metal, brazing: the metal or alloy used as a filler metal in brazing, which has a liquidus above 840°F (450°C) and below the solidus of the base metal.

filler metal, powder: filler metal in particle form.

filler metal, supplemental: in electroslag welding or in a welding process in which there is an arc between one or more consumable electrodes and the workpiece, a powder, solid, or composite material that is introduced into the weld other than the consumable electrode(s).

fillet weld: a weld of approximately triangular cross section joining two surfaces approximately at right angles to each other in a lap joint, tee joint, or corner joint.

flaw: an undesirable discontinuity. See also *defect*.

flux (welding or brazing): a material used to dissolve, prevent, or facilitate the removal of oxides or other undesirable surface substances. It may act to stabilize the arc, shield the molten pool, and may or may not evolve shielding gas by decomposition.

Copyrighted material licensed to Fermi National Laboratory by Clarivate Analytics (US) LLC, subscriptions.techstreet.com, downloaded on 2020-09-23 17:45:20 +0000 by Fermi National Laboratory User.
No further reproduction or distribution is permitted.

flux cover: metal bath dip brazing and dip soldering. A layer of molten flux over the molten filler metal bath.

flux, active (SAW): a flux from which the amount of elements deposited in the weld metal is dependent upon the welding parameters, primarily arc voltage.

flux, alloy (SAW): a flux which provides alloying elements in the weld metal deposit.

flux, neutral (SAW): a flux which will not cause a significant change in the weld metal composition when there is a large change in the arc voltage.

forehand welding: a welding technique in which the welding torch or gun is directed toward the progress of welding.

frequency: the completed number of cycles which the oscillating head makes in 1 min or other specified time increment.

frictional resistance in the butt-fusing machine: force-opposing movement due to friction in the mechanism of the fusing machine.

fuel gas: a gas such as acetylene, natural gas, hydrogen, propane, stabilized methylacetylene propadiene, and other fuels normally used with oxygen in one of the oxyfuel processes and for heating.

fused spray deposit (thermal spraying): a self-fluxing thermal spray deposit which is subsequently heated to coalescence within itself and with the substrate.

fusing: the coalescence of two plastic members by the combination of controlled heating and the application of pressure approximately normal to the interface between them.

fusing gauge pressure: the hydraulic gauge pressure to be observed by the fusing operator when butt-fusing polyethylene (PE) pipe ends. This is the sum of the theoretical fusing pressure plus the drag pressure.

fusing operator: person trained and qualified to carry out fusing of polyethylene (PE) pipes and/or fittings using a butt-fusing procedure or electrofusion procedure with applicable equipment.

fusing procedure specification: a document providing in detail the required variables for the fusing process to ensure repeatability in the fusing procedure. This generic term includes fusing procedure specifications qualified by testing (FPS), as well as standard butt-fusing procedure specifications (SFPS) or manufacturer qualified electrofusion procedure specifications (MEFPS).

fusion (fusion welding): the melting together of filler metal and base metal, or of base metal only, to produce a weld.

fusion face: a surface of the base metal that will be melted during welding.

fusion line: a non-standard term for weld interface.

gas backing: see *backing gas*.

globular transfer (arc welding): a type of metal transfer in which molten filler metal is transferred across the arc in large droplets.

groove weld: a weld made in a groove formed within a single member or in the groove between two members to be joined. The standard types of groove weld are as follows:

(a) square groove weld
(b) single-Vee groove weld
(c) single-bevel groove weld
(d) single-U groove weld
(e) single-J groove weld
(f) single-flare-bevel groove weld
(g) single-flare-Vee groove weld
(h) double-Vee groove weld
(i) double-bevel groove weld
(j) double-U groove weld
(k) double-J groove weld
(l) double-flare-bevel groove weld
(m) double-flare-Vee groove weld

header: pipe used as a central connection or a manifold for other piping runs.

heat soak cycle: the portion of the butt-fusing procedure where heat is allowed to soak into the pipes or fittings after the bead-up cycle is complete. The heat soak cycle begins by reducing the pressure to that required to maintain contact with the heater surfaces without force. The pipe ends continue heating until the minimum heat soak time is completed for the pipe wall being joined and the minimum bead size is attained per the standard procedure.

heat soak time: the time required to complete the butt-fusing heat soak cycle.

heater removal (dwell) time: period of time during butt-fusing from the separation of the pipe or fitting ends from the heater surface, removal of the heater, and closure of the carriage to bring the molten pipe or fitting ends together.

heater temperature: measured temperature on the surface of the heater where the pipe or fitting cross section makes contact during butt fusing.

heat-affected zone: that portion of the base metal which has not been melted, but whose mechanical properties or microstructures have been altered by the heat of welding or cutting.

instantaneous energy: as used for waveform controlled welding, the determination of total energy during a time period using the product of current and voltage measurements made at rapid intervals that capture brief changes in the welding waveform.

Copyrighted material licensed to Fermi National Laboratory by Clarivate Analytics (US) LLC, subscriptions.techstreet.com, downloaded on 2020-09-23 17:45:20 +0000 by Fermi National Laboratory User.
No further reproduction or distribution is permitted.

instantaneous power: as used for waveform controlled welding, the determination of average power using the product of current and voltage measurements made at rapid intervals that capture brief changes in the welding waveform.

interfacial pressure: the amount of force per pipe joint area required to make an approved butt-fusing joint. This is used to calculate the fusing machine gauge pressure. The interfacial pressure is often expressed as a range [example: 60 psi to 90 psi (400 kPa to 600 kPa)], and the common practice is to use the mid-range [example: 75 psi (505 kPa) when making these calculations.

interpass temperature: the highest temperature in the weld joint immediately prior to welding, or in the case of multiple pass welds, the highest temperature in the section of the previously deposited weld metal, immediately before the next pass is started.

joint: the junction of members or the edges of members which are to be joined or have been joined.

joint penetration: the distance the weld metal extends from the weld face into a joint, exclusive of weld reinforcement.

keyhole welding: a technique in which a concentrated heat source penetrates partially or completely through a workpiece, forming a hole (keyhole) at the leading edge of the weld pool. As the heat source progresses, the molten metal fills in behind the hole to form the weld bead.

lap joint: a joint between two overlapping members in parallel planes.

lap or overlap: the distance measured between the edges of two plates when overlapping to form the joint.

layer: a stratum of weld metal consisting of one or more beads. See Figures QG-109.2.1 and QG-109.2.2.

lower transformation temperature: the temperature at which austenite begins to form during heating.

macro-examination: the process of observing a specimen cross-section by the unaided eye, or at a specified low magnification, with or without the use of smoothing and etching.

Manufacturer Qualified Electrofusion Procedure Specification (MEFPS): an electrofusion fusing procedure specification developed by an electrofusion fitting manufacturer based on standard industry practice in accordance with the Plastics Pipe Institute (PPI) Technical Note TN-34 and ASTM F1290, for the electrofusion fitting manufacturer's specific electrofusion joint design, and qualified by the electrofusion fitting manufacturer in accordance with ASTM F1055 to define the ranges for the essential variables identified in QF-253. An MEFPS may be used for production fusing by organizations without further qualification.

melt bead size: the width of a bead formed at the interface between the pipe end and the heater surface during the butt-fusing heating cycle.

melt-in: a technique of welding in which the intensity of a concentrated heat source is so adjusted that a weld pass can be produced from filler metal added to the molten weld metal.

metal transfer mode (gas metal-arc welding): the manner in which molten metal travels from the end of a consumable electrode to the workpiece. See also *short-circuiting transfer (gas metal-arc welding)*; *pulsed power welding*; *globular transfer (arc welding)*; *pulsed spray welding*; and *spray transfer (arc welding)*.

nugget: the volume of weld metal formed in a spot, seam, or projection weld.

organization: as used in this Section, an organization is a manufacturer, contractor, assembler, installer, or some other single or combined entity having responsibility for operational control of the material-joining methods used in the construction of components in accordance with the codes, standards, and specifications which reference this Section.

oscillation: for a machine or automatic process, an alternating motion relative to the direction of travel of welding, brazing, or thermal spray device. See also *weave bead*.

overlay: a non-standard term, used in Section IX, for surfacing. See also *hard-facing* and *corrosion-resistant overlay*.

overlay, corrosion-resistant weld metal: deposition of one or more layers of weld metal to the surface of a base material in an effort to improve the corrosion resistance properties of the surface. This would be applied at a level above the minimum design thickness as a nonstructural component of the overall wall thickness.

overlay, hard-facing weld metal: deposition of one or more layers of weld metal to the surface of a material in an effort to improve the wear resistance properties of the surface. This would be applied at a level above the minimum design thickness as a nonstructural component of the overall wall thickness.

pass: a single progression of a welding or surfacing operation along a joint, weld deposit, or substrate. The result of a pass is a weld bead or layer.

pass, cover: a final or cap pass(es) on the face of a weld.

pass, wash: pass to correct minor surface aberrations and/or prepare the surface for nondestructive testing.

peel test: a destructive method of testing that mechanically separates a lap joint by peeling.

peening: the mechanical working of metals using impact blows.

Copyrighted material licensed to Fermi National Laboratory by Clarivate Analytics (US) LLC, subscriptions.techstreet.com, downloaded on 2020-09-23 17:45:20 +0000 by Fermi National Laboratory User.
No further reproduction or distribution is permitted.

performance qualification: the demonstration of a welder's or welding operator's ability to produce welds meeting prescribed standards.

plastics:: those materials listed in Table QF-422.

plug weld: a weld made in a circular, or other geometrically shaped hole (like a slot weld) in one member of a lap or tee joint, joining that member to the other. The walls of the hole may or may not be parallel, and the hole may be partially or completely filled with weld metal. (A fillet-welded hole or spot weld should not be construed as conforming to this definition.)

polarity, reverse: the arrangement of direct current arc welding leads with the work as the negative pole and the electrode as the positive pole of the welding arc; a synonym for direct current electrode positive.

polarity, straight: the arrangement of direct current arc welding leads in which the work is the positive pole and the electrode is the negative pole of the welding arc; a synonym for direct current electrode negative.

polyethylene (PE): a polyolefin composed of polymers of ethylene.

postbraze heat treatment: any heat treatment subsequent to brazing.

postheating: the application of heat to an assembly after welding, brazing, soldering, thermal spraying, or thermal cutting.

postweld heat treatment: any heat treatment subsequent to welding.

postweld hydrogen bakeout: holding a completed or partially completed weld at elevated temperature below 800°F (425°C) for the purpose of allowing hydrogen diffusion from the weld.

powder: see *filler metal, powder*.

preheat current: an impulse or series of impulses that occurs prior to and is separated from the welding current.

preheat maintenance: practice of maintaining the minimum specified preheat temperature, or some specified higher temperature for some required time interval after welding or thermal spraying is finished or until post weld heat treatment is initiated.

preheat temperature: the minimum temperature in the weld joint preparation immediately prior to the welding; or in the case of multiple pass welds, the minimum temperature in the section of the previously deposited weld metal, immediately prior to welding.

preheating: the application of heat to the base metal immediately before a welding or cutting operation to achieve a specified minimum preheat temperature.

pulsed power welding: an arc welding process variation in which the welding power source is programmed to cycle between low and high power levels.

rabbet joint: typical design is indicated in Figures QB-462.1(c), QB-462.4, QB-463.1(c), and QB-463.2(a).

retainer: nonconsumable material, metallic or nonmetallic, which is used to contain or shape molten weld metal. See also *backing*.

seal weld: any weld designed primarily to provide a specific degree of tightness against leakage.

seam weld: a continuous weld made between or upon overlapping members in which coalescence may start and occur on the faying surfaces, or may have proceeded from the surface of one member. The continuous weld may consist of a single weld bead or a series of overlapping spot welds. See also *resistance welding*.

short-circuiting transfer (gas metal-arc welding): metal transfer in which molten metal from a consumable electrode is deposited during repeated short circuits. See also *globular transfer* and *spray transfer*.

sidewall fusion (SWF): fusing accomplished by melting the concave surface of the base of a saddle fitting while simultaneously melting a matching pattern on the surface of the main pipe using a contact heater, then removing the heater and bringing the two melted surfaces together under pressure to achieve coalescence of the molten polyethylene materials during the cooling phase. Some of the more common terms relating to sidewall fusion are defined in ASTM F2620.

single-welded joint: a joint welded from one side only.

single-welded lap joint: a lap joint in which the overlapped edges of the members to be joined are welded along the edge of one member only.

slag inclusion: nonmetallic solid material entrapped in weld metal or between weld metal and base metal.

specimen: see *test specimen*.

spot weld: a weld made between or upon overlapping members in which coalescence may start and occur on the faying surfaces or may proceed from the outer surface of one member. The weld cross section (plan view) is approximately circular.

spray transfer (arc welding): metal transfer in which molten metal from a consumable electrode is propelled axially across the arc in small droplets.

spray-fuse: a thermal spraying technique in which the deposit is reheated to fuse the particles and form a metallurgical bond with the substrate.

Standard Fusing Procedure Specification (SFPS): a fusing procedure specification that contains acceptable polyethylene (PE) fusing variables based on standard industry

Copyrighted material licensed to Fermi National Laboratory by Clarivate Analytics (US) LLC, subscriptions.techstreet.com, downloaded on 2020-09-23 17:45:20 +0000 by Fermi National Laboratory User.
No further reproduction or distribution is permitted.

practice and testing as defined in ASTM F2620. An SFPS may be used for production fusing by organizations without further qualification. Test results are described in Plastics Pipe Institute (PPI) Technical Reports TR-33 for butt fusing and TR-41 for sidewall fusing.

Standard Welding Procedure Specification (SWPS): a welding procedure specification, published by the American Welding Society, that is made available for production welding by companies or individuals without further qualification, and that may be used in Code applications in accordance with the restrictions and limitations of Article V.

stringer bead: a weld bead formed without appreciable weaving.

surface temper bead reinforcing layer: a subset of temper bead welding in which one or more layers of weld metal are applied on or above the surface layers of a component and are used to modify the properties of previously deposited weld metal or the heat-affected zone. Surface layer may cover a surface or only the perimeter of the weld.

surfacing: the application by welding, brazing, or thermal spraying of a layer(s) of material to a surface to obtain desired properties or dimensions, as opposed to making a joint.

tee joint (T): a joint between two members located approximately at right angles to each other in the form of a T.

temper bead welding: a weld bead placed at a specific location in or at the surface of a weld for the purpose of affecting the metallurgical properties of the heat-affected zone or previously deposited weld metal. The bead may be above, flush with, or below the surrounding base metal surface. If above the base metal surface, the beads may cover all or only part of the weld deposit and may or may not be removed following welding.

test coupon: a weld or braze assembly for procedure or performance qualification testing. The coupon may be any product from plate, pipe, tube, etc., and may be a fillet weld, overlay, deposited weld metal, etc.

test coupon, fusing: a fused plastic test joint that is made to qualify a fusing procedure or fusing operator.

test specimen: a sample of a test coupon for specific test. The specimen may be a bend test, tension test, toughness test, chemical analysis, macrotest, etc. A specimen may be a complete test coupon, for example, in radiographic testing or small diameter pipe tension testing.

theoretical fusing pressure: the pipe area multiplied by the interfacial pressure and divided by the total effective piston area of the butt-fusing machine.

thermal cutting (TC): a group of cutting processes that severs or removes metal by localized melting, burning, or vaporizing of the workpieces.

throat, actual (of fillet): the shortest distance from the root of a fillet weld to its face.

throat, effective (of fillet): the minimum distance from the fillet face, minus any convexity, to the weld root. In the case of fillet welds combined with a groove weld, the weld root of the groove weld shall be used.

throat, theoretical (of fillet): the distance from the beginning of the joint root perpendicular to the hypotenuse of the largest right triangle that can be inscribed within the cross-section of a fillet weld. This dimension is based on the assumption that the root opening is equal to zero.

trailing gas: a gas used to produce a protective atmosphere that extends beyond the weld pool in the direction opposite of travel.

undercut: a groove melted into the base metal adjacent to the weld toe or weld root and left unfilled by weld metal.

upper transformation temperature: the temperature at which transformation of the ferrite to austenite is completed during heating.

usability: a measure of the relative ease of application of a filler metal to make a sound weld or braze joint.

waveform controlled welding: A welding process modification of the voltage and/or current wave shape to control characteristics such as droplet shape, penetration, wetting, bead shape or transfer mode(s).

weave bead: for a manual or semiautomatic process, a weld bead formed using weaving. See also *oscillation*.

weaving: a welding technique in which the energy source is oscillated transversely as it progresses along the weld path.

weld: a localized coalescence of metals or nonmetals produced either by heating the materials to the welding temperature, with or without the application of pressure, or by the application of pressure alone and with or without the use of filler material.

weld bead: a weld deposit resulting from a pass. See also *stringer bead* and *weave bead*.

weld face: the exposed surface of a weld on the side from which welding was done.

weld interface: the interface between the weld metal and base metal in a fusion weld.

weld metal: metal in a fusion weld consisting of that portion of the base metal and filler metal melted during welding.

Copyrighted material licensed to Fermi National Laboratory by Clarivate Analytics (US) LLC, subscriptions.techstreet.com, downloaded on 2020-09-23 17:45:20 +0000 by Fermi National Laboratory User.
No further reproduction or distribution is permitted.

weld reinforcement: weld metal on the face or root of a groove weld in excess of the metal necessary for the specified weld size.

weld size: for equal leg fillet welds: the leg lengths of the largest isosceles right triangle which can be inscribed within the fillet weld cross section.

weld size: for unequal leg fillet welds: the leg lengths of the largest right triangle which can be inscribed within the fillet weld cross section.

weld size: groove welds: the depth of chamfering plus any penetration beyond the chamfering, resulting in the strength carrying dimension of the weld.

weld, autogenous: a fusion weld made without filler metal.

welder: one who performs manual or semiautomatic welding.

welding gun, electron beam: a device that generates, accelerates, and forms a directed beam of electrons. This includes the beam alignment, focusing, and deflection coils. The electron gun forms a part of the electron beam gun column that includes shielding, mechanical components to control the vacuum in the electron beam path, and an optical viewing arrangement.

welding operator: one who operates machine or automatic welding equipment.

welding, arc stud (SW): an arc welding process that uses an arc between a metal stud, or similar part, and the other workpiece. The process is used without filler metal, with or without shielding gas or flux, with or without partial shielding from a ceramic or graphite ferrule surrounding the stud, and with the application of pressure after the faying surfaces are sufficiently heated.

welding, automatic: welding with equipment which performs the welding operation without adjustment of the controls by a welding operator. The equipment may or may not perform the loading and unloading of the work. See also *machine welding*.

welding, consumable guide electroslag: an electroslag welding process variation in which filler metal is supplied by an electrode and its guiding member.

welding, diffusion (DFW): a solid-state welding process producing a weld between multiple layers of sheet or plate by the application of mechanical pressure at elevated temperature with no macroscopic deformation or relative motion of the work pieces. A solid filler metal may be inserted between the faying surfaces.

welding, electrogas (EGW): an arc welding process that uses an arc between a continuous filler metal electrode and the weld pool, employing approximately vertical welding progression with retainers to confine the weld metal. The process is used with or without an externally supplied shielding gas and without the application of pressure. Shielding for use with solid or metal-cored electrodes is obtained from a gas or gas mixture. Shielding for use with flux-cored electrodes may or may not be obtained from an externally supplied gas or gas mixture.

welding, electron beam (EBW): a welding process that produces coalescence with a concentrated beam composed primarily of high velocity electrons, impinging on the joint. The process is used without shielding gas and without the application of pressure.

welding, electroslag (ESW): a welding process producing coalescence of metals with molten slag which melts the filler metal and the surfaces of the work to be welded. The molten weld pool is shielded by this slag which moves along the full cross section of the joint as welding progresses. The process is initiated by an arc which heats the slag. The arc is then extinguished and the conductive slag is maintained in a molten condition by its resistance to electric current passing between the electrode and the work. See electroslag welding electrode and consumable guide electroslag welding.

welding, flux-cored arc (FCAW): a gas metal-arc welding process that uses an arc between a continuous filler metal electrode and the weld pool. The process is used with shielding gas from a flux contained within the tubular electrode, with or without additional shielding from an externally supplied gas, and without the application of pressure.

welding, friction (FRW): a solid state welding process that produces a weld under compressive force contact of workpieces rotating or moving relative to one another to produce heat and plastically displace material from the faying surfaces.

welding, friction stir (FSW): a variation of friction welding producing a weld by the friction heating and plastic material displacement caused by a rapidly rotating tool traversing the weld joint.

welding, friction, inertia and continuous drive: processes and types of friction welding (solid state welding process) wherein coalescence is produced after heating is obtained from mechanically induced sliding motion between rubbing surfaces held together under pressure. Inertia welding utilizes all of the kinetic energy stored in a revolving flywheel spindle system. Continuous drive friction welding utilizes the energy provided by a continuous drive source such as an electric or hydraulic motor.

welding, gas metal-arc (GMAW): an arc welding process that uses an arc between a continuous filler metal electrode and the weld pool. The process is used with shielding from an externally supplied gas and without the application of pressure.

Copyrighted material licensed to Fermi National Laboratory by Clarivate Analytics (US) LLC, subscriptions.techstreet.com, downloaded on 2020-09-23 17:45:20 +0000 by Fermi National Laboratory User.
No further reproduction or distribution is permitted.

welding, gas metal-arc, pulsed spray (GMAW-P): a variation of the gas metal-arc welding process in which the power is pulsed resulting in transfer of the metal across the arc in spray mode. See also *pulsed power welding*.

welding, gas metal-arc, short-circuiting arc (GMAW-S): a variation of the gas metal-arc welding process in which the consumable electrode is deposited during repeated short circuits. See also *short-circuiting transfer*.

welding, gas tungsten-arc (GTAW): an arc welding process which produces coalescence of metals by heating them with an arc between a tungsten (nonconsumable) electrode and the work. Shielding is obtained from a gas or gas mixture. Pressure may or may not be used and filler metal may or may not be used. (This process has sometimes been called TIG welding, a nonpreferred term.)

welding, gas tungsten-arc, pulsed arc (GTAW-P): a variation of the gas tungsten-arc welding process in which the current is pulsed. See also *pulsed power welding*.

welding, hybrid: welding in which two or more welding processes are used in the same weld pool.

welding, hybrid, process separation: the distance between each welding process as specified in the WPS.

welding, hybrid, process sequence: the order of each welding process with respect to the direction of travel.

welding, induction (IW): a welding process that produces coalescence of metals by the heat obtained from resistance of the workpieces to the flow of induced high frequency welding current with or without the application of pressure. The effect of the high-frequency welding current is to concentrate the welding heat at the desired location.

welding, laser beam (LBW): a welding process which produces coalescence of materials with the heat obtained from the application of a concentrated coherent light beam impinging upon the members to be joined. Welding can be performed by using the melt-in technique [see also *welding, low-power density laser beam (LLBW)*] or by keyhole welding.

welding, low-power density laser beam (LLBW): a variation of the laser beam welding process in which the coherent light beam employs reduced power density, such that coalescence of materials is achieved by conduction (i.e., melt-in) without keyhole welding.

welding, machine: welding with equipment that has controls that can be adjusted by the welding operator, or adjusted under the welding operator's direction, in response to changes in the welding conditions. The torch, gun, or electrode holder is held by a mechanical device. See also *welding, automatic*.

welding, manual: welding wherein the entire welding operation is performed and controlled by hand.

welding, oxyfuel gas (OFW): a group of welding processes which produces coalescence by heating materials with an oxyfuel gas flame or flames, with or without the application of pressure, and with or without the use of filler metal.

welding, plasma-arc (PAW): an arc welding process which produces coalescence of metals by heating them with a constricted arc between an electrode and the workpiece (transferred arc), or the electrode and the constricting nozzle (nontransferred arc). Shielding is obtained from the hot, ionized gas issuing from the torch orifice which may be supplemented by an auxiliary source of shielding gas. Shielding gas may be an inert gas or a mixture of gases. Pressure may or may not be used, and filler metal may or may not be supplied.

welding, projection (PW): a resistance welding process that produces coalescence by the heat obtained from the resistance of the flow of welding current. The resulting welds are localized at predetermined points by projections, embossments, or intersections. The metals to be joined lap over each other.

welding, resistance (RW): a group of welding processes that produces coalescence of the faying surfaces with the heat obtained from resistance of the workpieces to the flow of the welding current in a circuit of which the workpieces are a part, and by the application of pressure.

welding, resistance seam (RSEW): a resistance welding process that produces a weld at the faying surfaces of overlapped parts progressively along a length of a joint. The weld may be made with overlapping weld nuggets, a continuous weld nugget, or by forging the joint as it is heated to the welding temperature by resistance to the flow of the welding current.

welding, resistance spot (RSW): a resistance welding process that produces a weld at the faying surfaces of a joint by the heat obtained from resistance to the flow of welding current through the workpieces from electrodes that serve to concentrate the welding current and pressure at the weld area.

welding, resistance stud: a resistance welding process wherein coalescence is produced by the heat obtained from resistance to electric current at the interface between the stud and the workpiece, until the surfaces to be joined are properly heated, when they are brought together under pressure.

welding, semiautomatic arc: arc welding with equipment which controls only the filler metal feed. The advance of the welding is manually controlled.

welding, shielded metal-arc (SMAW): an arc welding process with an arc between a covered electrode and the weld pool. The process is used with shielding from the

Copyrighted material licensed to Fermi National Laboratory by Clarivate Analytics (US) LLC, subscriptions.techstreet.com, downloaded on 2020-09-23 17:45:20 +0000 by Fermi National Laboratory User.
No further reproduction or distribution is permitted.

decomposition of the electrode covering, without the application of pressure, and with filler metal from the electrode.

welding, stud: a general term for the joining of a metal stud or similar part to a workpiece. Welding may be accomplished by arc, resistance, friction, or other suitable process with or without external gas shielding.

welding, submerged-arc (SAW): an arc welding process that uses an arc or arcs between a bare metal electrode or electrodes and the weld pool. The arc and molten metal are shielded by a blanket of granular flux on the workpieces. The process is used without pressure and with filler metal from the electrode and sometimes from a supplemental source (welding rod, flux, or metal granules).

weldment: an assembly whose constituent parts are joined by welding, or parts which contain weld metal overlay.

Figure QG-109.2.1
Typical Single and Multibead Layers

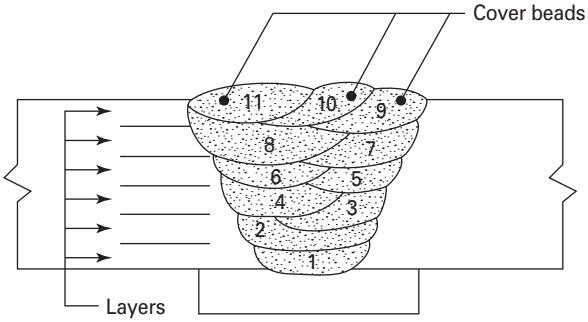

Figure QG-109.2.2
Typical Single Bead Layers

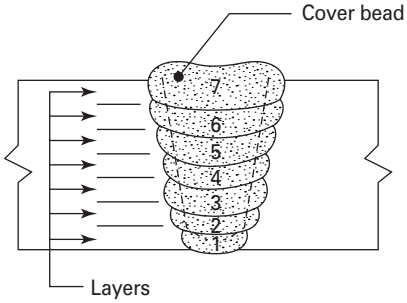

Copyrighted material licensed to Fermi National Laboratory by Clarivate Analytics (US) LLC, subscriptions.techstreet.com, downloaded on 2020-09-23 17:45:20 +0000 by Fermi National Laboratory User.
No further reproduction or distribution is permitted.

PART QW
WELDING

ARTICLE I
WELDING GENERAL REQUIREMENTS

QW-100 SCOPE

The rules in this Part apply to the preparation of Welding Procedure Specifications (WPS) and the qualification of welding procedures, welders, and welding operators for all types of manual and machine welding processes permitted in this Part. These rules may also be applied, insofar as they are applicable, to other manual or machine welding processes permitted in other Sections.

(19) QW-101 PROCEDURE SPECIFICATION

A WPS used by an organization that will have responsible operational control of production welding shall be a WPS that has been qualified by that organization in accordance with Article II, or it shall be an AWS Standard Welding Procedure Specification (SWPS) listed in Mandatory Appendix E and adopted by that organization in accordance with Article V.

Both WPSs and SWPSs specify the variables (including ranges, if any) under which welding must be performed. These conditions include the base metals that are permitted, the filler metals that must be used (if any), preheat and postweld heat treatment requirements, etc.

When a WPS is to be prepared by the organization, it must address, as a minimum, the specific variables, both essential and nonessential, as provided in Article II for each process to be used in production welding. In addition, when other Sections of the Code require toughness qualification of the WPS, the supplementary essential variables must be addressed in the WPS.

When a variable is outside the scope of a WPS (e.g., the variable applies to a P-Number not included on the WPS) or is addressed by another variable (e.g., the AWS Classification specifies the filler metal product form), that variable need not be specifically addressed on the WPS or PQRs that support the WPS.

(19) QW-102 PERFORMANCE QUALIFICATION

In performance qualification, the basic criterion established for welder qualification is to determine the welder's ability to deposit sound weld metal. The purpose of the performance qualification test for the welding operator is to determine the welding operator's mechanical ability to operate the welding equipment.

QW-103 RESPONSIBILITY

QW-103.1 Welding. Each organization shall conduct the tests required in this Section to qualify the welding procedures used in the construction of the weldments built under this Code and the performance of welders and welding operators who apply these procedures.

QW-103.2 Records. Each organization shall maintain a record of the results obtained in welding procedure and welder and welding operator performance qualifications. Refer to recommended Forms in Nonmandatory Appendix B.

QW-110 WELD ORIENTATION

The orientations of welds are illustrated in Figure QW-461.1 or Figure QW-461.2.

QW-120 TEST POSITIONS FOR GROOVE WELDS

Groove welds may be made in test coupons oriented in any of the positions in Figure QW-461.3 or Figure QW-461.4 and as described in the following paragraphs, except that an angular deviation of ±15 deg from the specified horizontal and vertical planes, and an angular deviation of ±5 deg from the specified inclined plane are permitted during welding.

QW-121 PLATE POSITIONS

QW-121.1 Flat Position 1G. Plate in a horizontal plane with the weld metal deposited from above. Refer to Figure QW-461.3, illustration (a).

QW-121.2 Horizontal Position 2G. Plate in a vertical plane with the axis of the weld horizontal. Refer to Figure QW-461.3, illustration (b).

Copyrighted material licensed to Fermi National Laboratory by Clarivate Analytics (US) LLC, subscriptions.techstreet.com, downloaded on 2020-09-23 17:45:20 +0000 by Fermi National Laboratory User.
No further reproduction or distribution is permitted.

QW-121.3 Vertical Position 3G. Plate in a vertical plane with the axis of the weld vertical. Refer to Figure QW-461.3, illustration (c).

QW-121.4 Overhead Position 4G. Plate in a horizontal plane with the weld metal deposited from underneath. Refer to Figure QW-461.3, illustration (d).

QW-122 PIPE POSITIONS

QW-122.1 Flat Position 1G. Pipe with its axis horizontal and rolled during welding so that the weld metal is deposited from above. Refer to Figure QW-461.4, illustration (a).

QW-122.2 Horizontal Position 2G. Pipe with its axis vertical and the axis of the weld in a horizontal plane. Pipe shall not be rotated during welding. Refer to Figure QW-461.4, illustration (b).

QW-122.3 Multiple Position 5G. Pipe with its axis horizontal and with the welding groove in a vertical plane. Welding shall be done without rotating the pipe. Refer to Figure QW-461.4, illustration (c).

QW-122.4 Multiple Position 6G. Pipe with its axis inclined at 45 deg to horizontal. Welding shall be done without rotating the pipe. Refer to Figure QW-461.4, illustration (d).

QW-123 TEST POSITIONS FOR STUD WELDS

QW-123.1 Stud Welding. Stud welds may be made in test coupons oriented in any of the positions as described in QW-121 for plate and QW-122 for pipe (excluding QW-122.1). In all cases, the stud shall be perpendicular to the surface of the plate or pipe. See Figures QW-461.7 and QW-461.8.

QW-124 SPECIAL POSITIONS

QW-124.1 Test positions other than those defined in QW-120 through QW-123 are defined as "special positions."

QW-130 TEST POSITIONS FOR FILLET WELDS

Fillet welds may be made in test coupons oriented in any of the positions of Figure QW-461.5 or Figure QW-461.6, and as described in the following paragraphs, except that an angular deviation of ±15 deg from the specified horizontal and vertical planes is permitted during welding.

QW-131 PLATE POSITIONS

QW-131.1 Flat Position 1F. Plates so placed that the weld is deposited with its axis horizontal and its throat vertical. Refer to Figure QW-461.5, illustration (a).

QW-131.2 Horizontal Position 2F. Plates so placed that the weld is deposited with its axis horizontal on the upper side of the horizontal surface and against the vertical surface. Refer to Figure QW-461.5, illustration (b).

QW-131.3 Vertical Position 3F. Plates so placed that the weld is deposited with its axis vertical. Refer to Figure QW-461.5, illustration (c).

QW-131.4 Overhead Position 4F. Plates so placed that the weld is deposited with its axis horizontal on the underside of the horizontal surface and against the vertical surface. Refer to Figure QW-461.5, illustration (d).

QW-132 PIPE POSITIONS

QW-132.1 Flat Position 1F. Pipe with its axis inclined at 45 deg to horizontal and rotated during welding so that the weld metal is deposited from above and at the point of deposition the axis of the weld is horizontal and the throat vertical. Refer to Figure QW-461.6, illustration (a).

QW-132.2 Horizontal Positions 2F and 2FR.

(a) Position 2F. Pipe with its axis vertical so that the weld is deposited on the upper side of the horizontal surface and against the vertical surface. The axis of the weld will be horizontal and the pipe is not to be rotated during welding. Refer to Figure QW-461.6, illustration (b).

(b) Position 2FR. Pipe with its axis horizontal and the axis of the deposited weld in the vertical plane. The pipe is rotated during welding. Refer to Figure QW-461.6, illustration (c).

QW-132.3 Overhead Position 4F. Pipe with its axis vertical so that the weld is deposited on the underside of the horizontal surface and against the vertical surface. The axis of the weld will be horizontal and the pipe is not to be rotated during welding. Refer to Figure QW-461.6, illustration (d).

QW-132.4 Multiple Position 5F. Pipe with its axis horizontal and the axis of the deposited weld in the vertical plane. The pipe is not to be rotated during welding. Refer to Figure QW-461.6, illustration (e).

QW-133 SPECIAL POSITIONS

QW-133.1 Test positions other than those defined in QW-130 through QW-132 are defined as "special positions."

QW-140 TYPES AND PURPOSES OF TESTS AND EXAMINATIONS

QW-141 MECHANICAL TESTS

Mechanical tests used in procedure or performance qualification are specified in QW-141.1 through QW-141.5.

Copyrighted material licensed to Fermi National Laboratory by Clarivate Analytics (US) LLC, subscriptions.techstreet.com, downloaded on 2020-09-23 17:45:20 +0000 by Fermi National Laboratory User.
No further reproduction or distribution is permitted.

QW-141.1 Tension Tests. Tension tests as described in QW-150 are used to determine the ultimate strength of groove-weld joints.

QW-141.2 Guided-Bend Tests. Guided-bend tests as described in QW-160 are used to determine the degree of soundness and ductility of groove-weld joints.

QW-141.3 Fillet-Weld Tests. Tests as described in QW-180 are used to determine the size, contour, and degree of soundness of fillet welds.

QW-141.4 Toughness Tests. Tests as described in QW-171 and QW-172 are used to determine the toughness of the weldment.

QW-141.5 Stud-Weld Test. Deflection bend, hammering, torque, or tension tests as shown in Figures QW-466.4, QW-466.5, and QW-466.6, and a macro-examination performed in accordance with QW-202.5, respectively, are used to determine acceptability of stud welds.

QW-142 SPECIAL EXAMINATIONS FOR WELDERS

Radiographic or Ultrasonic examination per QW-191 may be substituted for mechanical testing of QW-141 for groove-weld performance qualification as permitted in QW-304 to prove the ability of welders to make sound welds.

QW-143 EXAMINATION FOR WELDING OPERATORS

Radiographic or Ultrasonic examination per QW-191 may be substituted for mechanical testing of QW-141 for groove weld performance qualification as permitted in QW-305 to prove the ability of welding operators to make sound welds.

QW-144 VISUAL EXAMINATION

Visual examination as described in QW-194 is used to determine that the final weld surfaces meet specified quality standards.

QW-150 TENSION TESTS

QW-151 SPECIMENS

Tension test specimens shall conform to one of the types illustrated in Figures QW-462.1(a) through QW-462.1(e) and shall meet the requirements of QW-153.

QW-151.1 Reduced Section — Plate. Reduced-section specimens conforming to the requirements given in Figure QW-462.1(a) may be used for tension tests on all thicknesses of plate.

(a) For thicknesses up to and including 1 in. (25 mm), a full thickness specimen shall be used for each required tension test.

(b) For plate thickness greater than 1 in. (25 mm), full thickness specimens or multiple specimens may be used, provided (c) and (d) are complied with.

(c) When multiple specimens are used, in lieu of full thickness specimens, each set shall represent a single tension test of the full plate thickness. Collectively, all of the specimens required to represent the full thickness of the weld at one location shall comprise a set.

(d) When multiple specimens are necessary, the entire thickness shall be mechanically cut into a minimum number of approximately equal strips of a size that can be tested in the available equipment. Each specimen of the set shall be tested and meet the requirements of QW-153.

QW-151.2 Reduced Section — Pipe. Reduced-section specimens conforming to the requirements given in Figure QW-462.1(b) may be used for tension tests on all thicknesses of pipe having an outside diameter greater than 3 in. (75 mm).

(a) For thicknesses up to and including 1 in. (25 mm), a full thickness specimen shall be used for each required tension test.

(b) For pipe thicknesses greater than 1 in. (25 mm), full thickness specimens or multiple specimens may be used, provided (c) and (d) are complied with.

(c) When multiple specimens are used, in lieu of full thickness specimens, each set shall represent a single tension test of the full pipe thickness. Collectively, all of the specimens required to represent the full thickness of the weld at one location shall comprise a set.

(d) When multiple specimens are necessary, the entire thickness shall be mechanically cut into a minimum number of approximately equal strips of a size that can be tested in the available equipment. Each specimen of the set shall be tested and meet the requirements of QW-153.

For pipe having an outside diameter of 3 in. (75 mm) or less, reduced-section specimens conforming to the requirements given in Figure QW-462.1(c) may be used for tension tests.

QW-151.3 Turned Specimens. Turned specimens conforming to the requirements given in Figure QW-462.1(d) may be used for tension tests.

(a) For thicknesses up to and including 1 in. (25 mm), a single turned specimen may be used for each required tension test, which shall be a specimen of the largest diameter D of Figure QW-462.1(d) possible for test coupon thickness [per Note (a) of Figure QW-462.1(d)].

(b) For thicknesses over 1 in. (25 mm), multiple specimens shall be cut through the full thickness of the weld with their centers parallel to the metal surface and not over 1 in. (25 mm) apart. The centers of the specimens adjacent to the metal surfaces shall not exceed $^5/_8$ in. (16 mm) from the surface.

(c) When multiple specimens are used, each set shall represent a single required tension test. Collectively, all the specimens required to represent the full thickness of the weld at one location shall comprise a set.

Copyrighted material licensed to Fermi National Laboratory by Clarivate Analytics (US) LLC, subscriptions.techstreet.com, downloaded on 2020-09-23 17:45:20 +0000 by Fermi National Laboratory User.
No further reproduction or distribution is permitted.

(d) Each specimen of the set shall be tested and meet the requirements of QW-153.

QW-151.4 Full-Section Specimens for Pipe. Tension specimens conforming to the dimensions given in Figure QW-462.1(e) may be used for testing pipe with an outside diameter of 3 in. (75 mm) or less.

QW-152 TENSION TEST PROCEDURE

The tension test specimen shall be ruptured under tensile load. The tensile strength shall be computed by dividing the ultimate total load by the least cross-sectional area of the specimen as calculated from actual measurements made before the load is applied.

QW-153 ACCEPTANCE CRITERIA — TENSION TESTS

QW-153.1 Tensile Strength. Minimum values for procedure qualification are provided under the column heading "Minimum Specified Tensile, ksi" of Table QW/QB-422. In order to pass the tension test, the specimen shall have a tensile strength that is not less than

(a) the minimum specified tensile strength of the base metal; or

(b) the minimum specified tensile strength of the weaker of the two, if base metals of different minimum tensile strengths are used; or

(c) the minimum specified tensile strength of the weld metal when the applicable Section provides for the use of weld metal having lower room temperature strength than the base metal;

(d) if the specimen breaks in the base metal outside of the weld or weld interface, the test shall be accepted as meeting the requirements, provided the strength is not more than 5% below the minimum specified tensile strength of the base metal.

(e) the specified minimum tensile strength is for full thickness specimens including cladding for Aluminum Alclad materials (P-No. 21 through P-No. 23) less than $\frac{1}{2}$ in. (13 mm). For Aluminum Alclad materials $\frac{1}{2}$ in. (13 mm) and greater, the specified minimum tensile strength is for both full thickness specimens that include cladding and specimens taken from the core.

QW-160 GUIDED-BEND TESTS

(19) QW-161 SPECIMENS

Guided-bend test specimens shall be prepared by cutting the test plate or pipe to form specimens of approximately rectangular cross section. The cut surfaces shall be designated the sides of the specimen. The other two surfaces shall be called the face and root surfaces, the face surface having the greater width of weld. The specimen thickness and bend radius are shown in Figures QW-466.1, QW-466.2, and QW-466.3. For materials with less than 3% elongation, a macro-etch specimen shall be used in lieu of bend test at each bend test location. Acceptance criteria shall be in accordance with QW-183(a). Figure QW-466.3 shows the recommended method of testing aluminum weldments. Guided-bend specimens are of five types, depending on whether the axis of the weld is transverse or parallel to the longitudinal axis of the specimen, and which surface (side, face, or root) is on the convex (outer) side of bent specimen. The five types are defined as follows.

QW-161.1 Transverse Side Bend. The weld is transverse to the longitudinal axis of the specimen, which is bent so that one of the side surfaces becomes the convex surface of the bent specimen. Transverse side-bend test specimens shall conform to the dimensions shown in Figure QW-462.2.

Specimens of base metal thickness equal to or greater than $1\frac{1}{2}$ in. (38 mm) may be cut into approximately equal strips between $\frac{3}{4}$ in. (19 mm) and $1\frac{1}{2}$ in. (38 mm) wide for testing, or the specimens may be bent at full width (see requirements on jig width in Figure QW-466.1). When the width of the weld is so large that a bend specimen cannot be bent so that the entire weld and heat affected zones are within the bent portion, multiple specimens across the entire weld and heat affected zones shall be used.

If multiple specimens are used in either situation above, one complete set shall be made for each required test. Each specimen shall be tested and meet the requirements in QW-163.

QW-161.2 Transverse Face Bend. The weld is transverse to the longitudinal axis of the specimen, which is bent so that the face surface becomes the convex surface of the bent specimen. Transverse face-bend test specimens shall conform to the dimensions shown in Figure QW-462.3(a). For subsize transverse face bends, see QW-161.4.

QW-161.3 Transverse Root Bend. The weld is transverse to the longitudinal axis of the specimen, which is bent so that the root surface becomes the convex surface of the bent specimen. Transverse root-bend test specimens shall conform to the dimensions shown in Figure QW-462.3(a). For subsize transverse root bends, see QW-161.4.

QW-161.4 Subsize Transverse Face and Root Bends. Bend specimens taken from small diameter pipe coupons may be subsized in accordance with General Note (b) of Figure QW-462.3(a).

QW-161.5 Longitudinal-Bend Tests. Longitudinal-bend tests may be used in lieu of the transverse side-bend, face-bend, and root-bend tests for testing weld metal or base metal combinations, which differ markedly in bending properties between

(a) the two base metals, or

(b) the weld metal and the base metal

Copyrighted material licensed to Fermi National Laboratory by Clarivate Analytics (US) LLC, subscriptions.techstreet.com, downloaded on 2020-09-23 17:45:20 +0000 by Fermi National Laboratory User.
No further reproduction or distribution is permitted.

QW-161.6 Longitudinal Face Bend. The weld is parallel to the longitudinal axis of the specimen, which is bent so that the face surface becomes the convex surface of the bent specimen. Longitudinal face-bend test specimens shall conform to the dimensions shown in Figure QW-462.3(b).

QW-161.7 Longitudinal Root Bend. The weld is parallel to the longitudinal axis of the specimen, which is bent so that the root surface becomes the convex side of the bent specimen. Longitudinal root-bend test specimens shall conform to the dimensions shown in Figure QW-462.3(b).

QW-162 GUIDED-BEND TEST PROCEDURE

QW-162.1 Jigs. Guided-bend specimens shall be bent in test jigs that are in substantial accordance with QW-466. When using the jigs illustrated in Figure QW-466.1 or Figure QW-466.2, the side of the specimen turned toward the gap of the jig shall be the face for face-bend specimens, the root for root-bend specimens, and the side with the greater discontinuities, if any, for side-bend specimens. The specimen shall be forced into the die by applying load on the plunger until the curvature of the specimen is such that a $^1/_8$ in. (3 mm) diameter wire cannot be inserted between the specimen and the die of Figure QW-466.1, or the specimen is bottom ejected if the roller type of jig (Figure QW-466.2) is used.

When using the wrap around jig (Figure QW-466.3), the side of the specimen turned toward the roller shall be the face for face-bend specimens, the root for root-bend specimens, and the side with the greater discontinuities, if any, for side-bend specimens.

When specimens wider than $1^1/_2$ in. (38 mm) are to be bent as permitted in Figure QW-462.2, the test jig mandrel must be at least $^1/_4$ in. (6 mm) wider than the specimen width.

QW-163 ACCEPTANCE CRITERIA — BEND TESTS

The weld and heat-affected zone of a transverse weld-bend specimen shall be completely within the bent portion of the specimen after testing.

The guided-bend specimens shall have no open discontinuity in the weld or heat-affected zone exceeding $^1/_8$ in. (3 mm), measured in any direction on the convex surface of the specimen after bending. Open discontinuities occurring on the corners of the specimen during testing shall not be considered unless there is definite evidence that they result from lack of fusion, slag inclusions, or other internal discontinuities. For corrosion-resistant weld overlay cladding, no open discontinuity exceeding $^1/_{16}$ in. (1.5 mm), measured in any direction, shall be permitted in the cladding, and no open discontinuity exceeding $^1/_8$ in. (3 mm) shall be permitted along the approximate weld interface.

QW-170 TOUGHNESS TESTS

QW-171 TOUGHNESS TESTS

QW-171.1 General. Toughness tests shall be made when required by referencing codes. Test procedures and apparatus shall conform to the requirements of the referencing code. When not specified by the referencing code, the test procedures and apparatus shall conform to the requirements of SA-370.

QW-171.2 Acceptance. The acceptance criteria shall be in accordance with that Section specifying toughness testing requirements.

QW-171.3 Location and Orientation of Test Specimen. The toughness test specimen removal and preparation requirements shall be as given in the Section requiring such tests. (19)

When qualifying pipe in the 5G or 6G position, the toughness specimens shall be removed from the shaded portion of Figure QW-463.1(f).

QW-172 TOUGHNESS TESTS — DROP WEIGHT

QW-172.1 General. Drop-weight tests shall be made when required by referencing codes. Test procedures and apparatus shall conform to the requirements of the referencing code. When not specified by the referencing code, the test procedures and apparatus shall conform to the requirements of ASTM specification E208.

QW-172.2 Acceptance. The acceptance criteria shall be in accordance with that Section requiring drop weight tests.

QW-172.3 Location and Orientation of Test Specimen. The drop weight test specimen, the crack starter location, and the orientation shall be as given in the Section requiring such tests.

When qualifying pipe in the 5G or 6G position, the toughness specimens shall be removed from the shaded portion of Figure QW-463.1(f).

QW-180 FILLET-WELD TESTS

QW-181 PROCEDURE AND PERFORMANCE QUALIFICATION SPECIMENS

QW-181.1 Procedure. The dimensions and preparation of the fillet-weld test coupon for procedure qualification as required in QW-202 shall conform to the requirements in Figure QW-462.4(a) or Figure QW-462.4(d). The test coupon for plate-to-plate shall be cut transversely to provide five test specimen sections, each approximately 2 in. (50 mm) long. For pipe-to-plate or pipe-to-pipe, the test coupon shall be cut transversely to provide four approximately equal test specimen sections. The test specimens shall be macro-examined to the requirements of QW-183.

Copyrighted material licensed to Fermi National Laboratory by Clarivate Analytics (US) LLC, subscriptions.techstreet.com, downloaded on 2020-09-23 17:45:20 +0000 by Fermi National Laboratory User.
No further reproduction or distribution is permitted.

(19) **QW-181.1.1 Production Assembly Mockups.** Production assembly mockups may be used in lieu of QW-181.1. When a production assembly mockup is used, the range qualified shall be limited to the base metal thickness, fillet weld size, and configuration of the mockup. Alternatively, multiple production assembly mockups may be qualified. The range of thicknesses of the base metal qualified shall be not less than the thickness of the thinner member tested and not greater than the thickness of the thicker member tested. The range for fillet weld sizes qualified shall be limited to no less than the smallest fillet weld tested and no greater than the largest fillet weld tested. The configuration of production assemblies shall be the same as that used in the production assembly mockup. The mockups for plate-to-shape shall be cut transversely to provide five approximately equal test specimens not to exceed approximately 2 in. (50 mm) in length. For pipe-to-shape mockups, the mockup shall be cut transversely to provide four approximately equal test specimens. For small mockups, multiple mockups may be required to obtain the required number of test specimens. The test specimens shall be macro-examined to the requirements of QW-183.

QW-181.2 Performance. The dimensions and the preparation of the fillet-weld test coupon for performance qualification shall conform to the requirements in Figure QW-462.4(b) or Figure QW-462.4(c). The test coupon for plate-to-plate shall be cut transversely to provide a center section approximately 4 in. (100 mm) long and two end sections, each approximately 1 in. (25 mm) long. For pipe-to-plate or pipe-to-pipe, the test coupon shall be cut to provide two quarter sections test specimens opposite to each other. One of the test specimens shall be fracture tested in accordance with QW-182 and the other macro-examined to the requirements of QW-184. When qualifying pipe-to-plate or pipe-to-pipe in the 5F position, the test specimens shall be removed as indicated in Figure QW-463.2(h).

(19) **QW-181.2.1 Production Assembly Mockups.** Production assembly mockups may be used in lieu of the fillet-weld test coupon requirements of QW-181.2. When production assembly mockups are used, the range qualified shall be limited to the fillet sizes, base metal thicknesses, and configuration of the mockup.

(a) Plate-to-Shape

(1) The mockup for plate-to-shape shall be cut transversely to provide three approximately equal test specimens not to exceed approximately 2 in. (50 mm) in length. The test specimen that contains the start and stop of the weld shall be fracture tested in accordance with QW-182. A cut end of one of the remaining test specimens shall be macro-examined in accordance with QW-184.

(b) Pipe-to-Shape

(1) The mockup for pipe-to-shape shall be cut transversely to provide two quarter sections approximately opposite to each other. The test specimen that contains the start and stop of the weld shall be fracture tested in accordance with QW-182. A cut end of the other quarter section shall be macro-examined in accordance with QW-184. When qualifying pipe-to-shape in the 5F position, the fracture specimen shall be removed from the lower 90-deg section of the mockup.

QW-182 FRACTURE TESTS

The stem of the 4 in. (100 mm) performance specimen center section in Figure QW-462.4(b) or the stem of the quarter section in Figure QW-462.4(c), as applicable, shall be loaded laterally in such a way that the root of the weld is in tension. The load shall be steadily increased until the specimen fractures or bends flat upon itself.

If the specimen fractures, the fractured surface shall show no evidence of cracks or incomplete root fusion, and the sum of the lengths of inclusions and porosity visible on the fractured surface shall not exceed $^{3}/_{8}$ in. (10 mm) in Figure QW-462.4(b) or 10% of the quarter section in Figure QW-462.4(c).

QW-183 MACRO-EXAMINATION — PROCEDURE SPECIMENS

One face of each cross section of the five test specimens in Figure QW-462.4(a) or four test specimens in Figure QW-462.4(d), as applicable shall be smoothed and etched with a suitable etchant (see QW-470) to give a clear definition to the weld metal and heat-affected zone. The examination of the cross sections shall include only one side of the test specimen at the area where the plate or pipe is divided into sections i.e., adjacent faces at the cut shall not be used. In order to pass the test

(a) visual examination of the cross sections of the weld metal and heat-affected zone shall show complete fusion and freedom from cracks

(b) there shall be not more than $^{1}/_{8}$ in. (3 mm) difference in the length of the legs of the fillet

QW-184 MACRO-EXAMINATION — PERFORMANCE SPECIMENS

The cut end of one of the end plate sections, approximately 1 in. (25 mm) long, in Figure QW-462.4(b) or the cut end of one of the pipe quarter sections in Figure QW-462.4(c), as applicable, shall be smoothed and etched with a suitable etchant (see QW-470) to give a clear definition of the weld metal and heat-affected zone. In order to pass the test

(a) visual examination of the cross section of the weld metal and heat-affected zone shall show complete fusion and freedom from cracks, except that linear indications at the root not exceeding $^{1}/_{32}$ in. (0.8 mm) shall be acceptable

(b) the weld shall not have a concavity or convexity greater than $^{1}/_{16}$ in. (1.5 mm)

(c) there shall be not more than $^{1}/_{8}$ in. (3 mm) difference in the lengths of the legs of the fillet

Copyrighted material licensed to Fermi National Laboratory by Clarivate Analytics (US) LLC, subscriptions.techstreet.com, downloaded on 2020-09-23 17:45:20 +0000 by Fermi National Laboratory User.
No further reproduction or distribution is permitted.

QW-185 DIFFUSION WELDING — PROCEDURE AND PERFORMANCE QUALIFICATION SPECIMENS

QW-185.1 The test block shall be a minimum of 8 in. × 8 in. (200 mm × 200 mm) and of a thickness such that there are at least 50 interface planes being welded.

QW-185.2 A minimum of three tension test specimens in accordance with the requirements of SA-370 shall be taken perpendicular to the interface planes and three parallel to the interface planes. The tension test results shall comply with QW-153.

QW-185.3 Microstructural evaluation shall be conducted in accordance with the requirements of ASTM E3 on a minimum of three cross-sections, one each from the top, center, and bottom one-third of the test coupon. The samples shall be polished, etched, and shall be free from cracks and shall show no incomplete bond or porosity on or adjacent to the bond lines. Size of each sample shall be that which can be mounted and polished to allow examination with an optical microscope at 50× to 100× magnification.

QW-190 OTHER TESTS AND EXAMINATIONS

QW-191 VOLUMETRIC NDE

QW-191.1 Radiographic Examination

QW-191.1.1 Method

The radiographic examination in QW-142 for welders and in QW-143 for welding operators shall meet the requirements of Section V, Article 2, except as follows:

(a) A written radiographic examination procedure is not required. Demonstration of image quality requirements on production or technique radiographs shall be considered satisfactory evidence of compliance with Section V, Article 2.

(b) Final acceptance of radiographs shall be based on the ability to see the prescribed image and the specified hole of a hole-type image quality indicator (IQI) or the designated wire of a wire-type IQI. The acceptance standards of QW-191.1.2 shall be met.

QW-191.1.2 Acceptance Criteria.

QW-191.1.2.1 Terminology.

(a) Linear Indications. Cracks, incomplete fusion, inadequate penetration, and slag are represented on the radiograph as linear indications in which the length is more than three times the width.

(b) Rounded Indications. Porosity and inclusions such as slag or tungsten are represented on the radiograph as rounded indications with a length three times the width or less. These indications may be circular, elliptical, or irregular in shape; may have tails; and may vary in density.

QW-191.1.2.2 Qualification Test Welds. Welder and welding operator performance tests by radiography of welds in test assemblies shall be judged unacceptable when the radiograph exhibits any imperfections in excess of the limits specified below

(a) Linear Indications

(1) any type of crack or zone of incomplete fusion or penetration

(2) any elongated slag inclusion which has a length greater than

(-a) $^1/_8$ in. (3 mm) for t up to $^3/_8$ in. (10 mm), inclusive

(-b) $^1/_3 t$ for t over $^3/_8$ in. (10 mm) to $2^1/_4$ in. (57 mm), inclusive

(-c) $^3/_4$ in. (19 mm) for t over $2^1/_4$ in. (57 mm)

(3) any group of slag inclusions in line that have an aggregate length greater than t in a length of $12t$, except when the distance between the successive imperfections exceeds $6L$ where L is the length of the longest imperfection in the group

(b) Rounded Indications

(1) The maximum permissible dimension for rounded indications shall be 20% of t or $^1/_8$ in. (3 mm), whichever is smaller.

(2) For welds in material less than $^1/_8$ in. (3 mm) in thickness, the maximum number of acceptable rounded indications shall not exceed 12 in a 6 in. (150 mm) length of weld. A proportionately fewer number of rounded indications shall be permitted in welds less than 6 in. (150 mm) in length.

(3) For welds in material $^1/_8$ in. (3 mm) or greater in thickness, the charts in Figure QW-191.1.2.2(b)(4) represent the maximum acceptable types of rounded indications illustrated in typically clustered, assorted, and randomly dispersed configurations. Rounded indications less than $^1/_{32}$ in. (0.8 mm) in maximum diameter shall not be considered in the radiographic acceptance tests of welders and welding operators in these ranges of material thicknesses.

Copyrighted material licensed to Fermi National Laboratory by Clarivate Analytics (US) LLC, subscriptions.techstreet.com, downloaded on 2020-09-23 17:45:20 +0000 by Fermi National Laboratory User.
No further reproduction or distribution is permitted.

Figure QW-191.1.2.2(b)(4)
Rounded Indication Charts

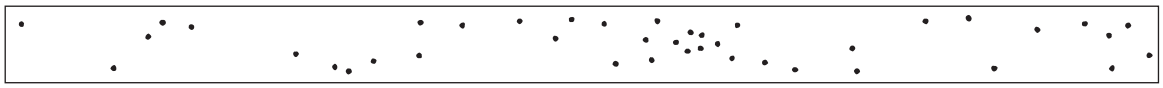

Typical Quantity and Size Permitted
in 6 in. (150 mm) Length of Weld
$^1/_8$ in. (3 mm) to $^1/_4$ in. (6 mm)
Thickness

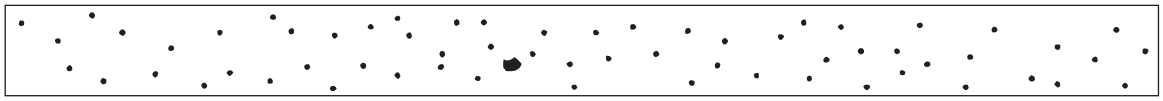

Typical Quantity and Size Permitted
in 6 in. (150 mm) Length of Weld
Over $^1/_4$ in. (6 mm) to $^1/_2$ in. (13 mm)
Thickness

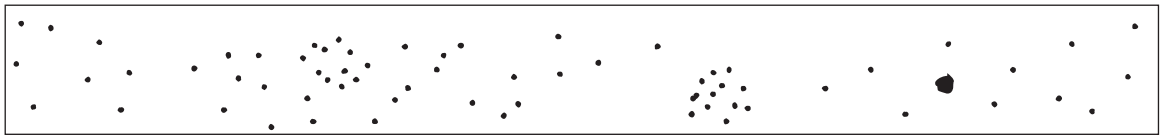

Typical Quantity and Size Permitted
in 6 in. (150 mm) Length of Weld
Over $^1/_2$ in. (13 mm) to 1 in. (25 mm)
Thickness

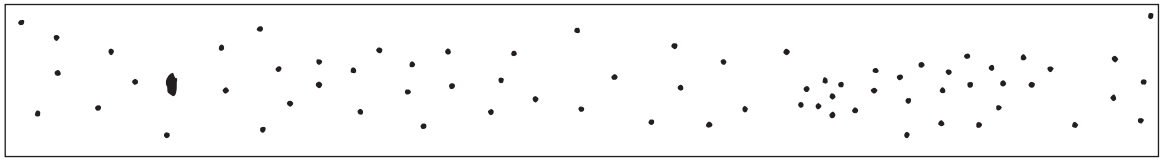

Typical Quantity and Size Permitted
in 6 in. (150 mm) Length of Weld
Over 1 in. (25 mm) Thickness

Copyrighted material licensed to Fermi National Laboratory by Clarivate Analytics (US) LLC, subscriptions.techstreet.com, downloaded on 2020-09-23 17:45:20 +0000 by Fermi National Laboratory User.
No further reproduction or distribution is permitted.

QW-191.1.2.3 Production Welds. The acceptance criteria for welders or welding operators who qualify on production welds by radiography as permitted in QW-304.1 or QW-305.1 shall be per QW-191.1.2.2

(19) **QW-191.2 Ultrasonic Examination**

QW-191.2.1 Method

(a) The ultrasonic examination in QW-142 for welders and in QW-143 for welding operators may be conducted on test welds in material 1/4 in. (6 mm) thick or greater.

(b) Ultrasonic examinations shall be performed using a written procedure in compliance with Section V, Article 1, T-150 and the requirements of Section V, Article 4 for methods and procedures.

QW-191.2.2 Acceptance Criteria for Qualification Test Welds. Indications shall be sized using the applicable technique(s) provided in the written procedure for the examination method. Indications shall be evaluated for acceptance as follows:

(a) All indications characterized as cracks, lack of fusion, or incomplete penetration are unacceptable regardless of length.

(b) Indications exceeding 1/8 in. (3 mm) in length are considered relevant, and are unacceptable when their lengths exceed

(1) 1/8 in. (3 mm) for t up to 3/8 in. (10 mm).

(2) 1/3t for t from 3/8 in. to 2 1/4 in. (10 mm to 57 mm).

(3) 3/4 in. (19 mm) for t over 2 1/4 in. (57 mm), where t is the thickness of the weld excluding any allowable reinforcement. For a butt weld joining two members having different thicknesses at the weld, t is the thinner of these two thicknesses. If a full penetration weld includes a fillet weld, the thickness of the throat of the fillet shall be included in t.

QW-191.2.3 Acceptance Criteria for Production Welds. The acceptance criteria for welders or welding operators who qualify on production welds by ultrasonic examination as permitted in QW-304.1 or QW-305.1 shall be per QW-191.2.2.

QW-191.3 Record of Tests. The results of welder and welding operator performance tests evaluated by volumetric NDE shall be recorded in accordance with QW-301.4.

QW-191.4 Personnel Qualifications and Certifications. (19)

(a) All personnel performing volumetric examinations for welder and welding operator qualifications shall be qualified and certified in accordance with their employer's written practice.

(b) The employer's written practice for qualification and certification of examination personnel shall meet all applicable requirements of Section V, Article 1.

(c) If the weld being examined is a production weld, the examiner may be qualified and certified in accordance with the requirements of the referencing code as an alternative to the requirements of this paragraph.

QW-192 STUD-WELD TESTS

QW-192.1 Procedure Qualification Specimens.

QW-192.1.1 Required Tests. Ten stud-weld tests are required to qualify each procedure. The equipment used for stud welding shall be completely automatic except for manual starting.

Every other welding stud (five joints) shall be tested either by hammering over until one-fourth of its length is flat on the test piece, or by bending the stud to an angle of at least 15 deg and returning it to its original position using a test jig and an adapter location dimension that are in accordance with Figure QW-466.4.

The remaining five welded stud joints shall be tested in torque using a torque testing arrangement that is substantially in accordance with Figure QW-466.5. Alternatively, where torquing is not feasible, tensile testing may be used, and the fixture for tensile testing shall be similar to that shown in Figure QW-466.6, except that studs without heads may be gripped on the unwelded end in the jaws of the tensile testing machine.

QW-192.1.2 Acceptance Criteria — Bend and Hammer Tests. In order to pass the test(s), each of the five stud welds and heat-affected zones shall be free of visible separation or fracture after bending and return bending or after hammering.

Copyrighted material licensed to Fermi National Laboratory by Clarivate Analytics (US) LLC, subscriptions.techstreet.com, downloaded on 2020-09-23 17:45:20 +0000 by Fermi National Laboratory User.
No further reproduction or distribution is permitted.

QW-192.1.3 Acceptance Criteria — Torque Tests. In order to pass the test(s), each of the five stud welds shall be subjected to the required torque shown in the following table before failure occurs.

Required Torque for Testing Threaded Carbon Steel Studs

Nominal Diameter of Studs, in. (mm)	Threads/in. and Series Designated	Testing Torque, ft-lb (J)
1/4 (6.4)	28 UNF	5.0 (6.8)
1/4 (6.4)	20 UNC	4.2 (5.7)
5/16 (7.9)	24 UNF	9.5 (12.9)
5/16 (7.9)	18 UNC	8.6 (11.7)
3/8 (9.5)	24 UNF	17 (23.0)
3/8 (9.5)	16 UNC	15 (20.3)
7/16 (11.1)	20 UNF	27 (36.6)
7/16 (11.1)	14 UNC	24 (32.5)
1/2 (12.7)	20 UNF	42 (57.0)
1/2 (12.7)	13 UNC	37 (50.2)
9/16 (14.3)	18 UNF	60 (81.4)
9/16 (14.3)	12 UNC	54 (73.2)
5/8 (15.9)	18 UNF	84 (114.0)
5/8 (15.9)	11 UNC	74 (100.0)
3/4 (19.0)	16 UNF	147 (200.0)
3/4 (19.0)	10 UNC	132 (180.0)
7/8 (22.2)	14 UNF	234 (320.0)
7/8 (22.2)	9 UNC	212 (285.0)
1 (25.4)	12 UNF	348 (470.0)
1 (25.4)	8 UNC	318 (430.0)

Required Torque for Testing Threaded Austenitic Stainless Steel Studs

Nominal Diameter of Studs, in. (mm)	Threads/in. and Series Designated	Testing Torque, ft-lb (J)
1/4 (6.4)	28 UNF	4.5 (6.1)
1/4 (6.4)	20 UNC	4.0 (5.4)
5/16 (7.9)	24 UNF	9.0 (12.2)
5/16 (7.9)	18 UNC	8.0 (10.8)
3/8 (9.5)	24 UNF	16.5 (22.4)
3/8 (9.5)	16 UNC	14.5 (19.7)
7/16 (11.1)	20 UNF	26.0 (35.3)
7/16 (11.1)	14 UNC	23.0 (31.2)
1/2 (12.7)	20 UNF	40.0 (54.2)
1/2 (12.7)	13 UNC	35.5 (48.1)
5/8 (15.9)	18 UNF	80.00 (108.5)
5/8 (15.9)	11 UNC	71.00 (96.3)
3/4 (19.0)	16 UNF	140.00 (189.8)
3/4 (19.0)	10 UNC	125.00 (169.5)
7/8 (22.2)	14 UNF	223.00 (302.3)
7/8 (22.2)	9 UNC	202.00 (273.9)
1 (25.4)	14 UNF	339.00 (459.6)
1 (25.4)	8 UNC	303.00 (410.8)

Alternatively, where torquing to destruction is not feasible, tensile testing may be used. For carbon and austenitic stainless steel studs, the failure strength shall be not less than 35,000 psi (240 MPa) and 30,000 psi (210 MPa), respectively. For other metals, the failure strength shall not be less than half of the minimum specified tensile strength of the stud material. The failure strength shall be based on the minor diameter of the threaded section of externally threaded studs, except where the shank diameter is less than the minor diameter, or on the original cross-sectional area where failure occurs in a nonthreaded, internally threaded, or reduced-diameter stud.

QW-192.1.4 Acceptance Criteria — Macro-Examination. In order to pass the macro-examination, each of five sectioned stud welds and the heat-affected zone shall be free of cracks when examined at 10X magnification, which is required by QW-202.5 when studs are welded to metals other than P-No. 1.

QW-192.2 Performance Qualification Specimens.

QW-192.2.1 Required Tests. Five stud-weld tests are required to qualify each stud-welding operator. The equipment used for stud welding shall be completely automatic except for manual starting. The performance test shall be welded in accordance with a qualified WPS per QW-301.2.

Each stud (five joints) shall be tested either by hammering over until one-fourth of its length is flat on the test piece or by bending the stud to an angle of at least 15 deg and returning it to its original position using a test jig and an adapter location dimension that are in accordance with Figure QW-466.4.

QW-192.2.2 Acceptance Criteria — Bend and Hammer Tests. In order to pass the test(s), each of the five stud welds and heat affected zones shall be free of visible separation or fracture after bending and return bending or after hammering.

QW-193 TUBE-TO-TUBESHEET TESTS (19)

When the applicable Code Section requires the use of this paragraph for tube-to-tubesheet demonstration mockup qualification, QW-193.1 through QW-193.1.3 shall apply.

QW-193.1 Procedure Qualification Specimens. Ten mockup welds are required for qualifying each tube-to-tubesheet welding procedure. The mockup assembly shall essentially duplicate the tube-to-tubesheet weld joint design to be used in production, within the limits of the essential variables of QW-288. The mockup test assembly shall be prepared with the tubesheet element having a thickness not less than the lesser of the thickness of the production tubesheet or 2 in. (50 mm). For tube-to-tubesheet welds to clad tubesheets, the cladding or overlay may be represented by a base material with a chemical composition that is essentially equivalent to the

Copyrighted material licensed to Fermi National Laboratory by Clarivate Analytics (US) LLC, subscriptions.techstreet.com, downloaded on 2020-09-23 17:45:20 +0000 by Fermi National Laboratory User.
No further reproduction or distribution is permitted.

cladding composition. All welds in the mockup assembly shall be subjected to the following tests and shall meet the applicable acceptance criteria.

QW-193.1.1 Visual Examination. The accessible surfaces of the welds shall be examined visually with no magnification required. The welds shall show complete fusion, be free from visual cracks or porosity indications, and have no evidence of burning through the tube wall.

QW-193.1.2 Liquid Penetrant. The liquid penetrant examination shall meet the requirements of Section V, Article 6. The weld surfaces shall meet the requirements of QW-195.2.

QW-193.1.3 Macro-Examination. The mockup welds shall be sectioned through the center of the tube for macro-examination. The four exposed surfaces shall be smoothed and etched with a suitable etchant (see QW-470) to give a clear definition of the weld and heat-affected zone. Using a magnification of 10X to 20X, the exposed cross sections of the weld shall confirm

(a) minimum leak path dimension required by the design

(b) no cracking

(c) complete fusion of the weld deposit into the tubesheet and tube wall face

QW-193.2 Performance Qualification Specimens. A minimum of five mockup tube-to-tubesheet welds are required to qualify each welder or welding operator. The same rules as those applicable for procedure qualification (QW-193.1) shall be followed, with the following additional requirements and exceptions:

(a) The essential variables in QW-387 shall apply.

(b) Essential performance qualification variables applicable for each welding process listed in QW-350 or QW-360 shall also be observed in addition to the variables of Table QW-388.

(c) Postweld heat treatment may be omitted.

Only one mockup weld is required to renew a welder's or welding operator's qualification when that qualification has expired or has been revoked per the requirements of QW-322.1.

QW-194 VISUAL EXAMINATION — PERFORMANCE

Performance test coupons shall show no cracks and complete joint penetration with complete fusion of weld metal and base metal.

QW-195 LIQUID PENETRANT EXAMINATION

QW-195.1 The liquid penetrant examination in QW-214 for corrosion-resistant weld metal overlay shall meet the requirements of Section V, Article 6. The acceptance standards of QW-195.2 shall be met.

QW-195.2 Liquid Penetrant Acceptance Criteria.

QW-195.2.1 Terminology.

relevant indications: indications with major dimensions greater than $^1/_{16}$ in. (1.5 mm)

linear indications: an indication having a length greater than three times the width.

rounded indications: an indication of circular or elliptical shape with the length equal to or less than three times the width.

QW-195.2.2 Acceptance Standards. Procedure and performance tests examined by liquid penetrant techniques shall be judged unacceptable when the examination exhibits any indication in excess of the limits specified in the following:

(a) relevant linear indications

(b) relevant rounded indications greater than $^3/_{16}$ in. (5 mm)

(c) four or more relevant rounded indications in a line separated by $^1/_{16}$ in. (1.5 mm) or less (edge-to-edge)

QW-196 RESISTANCE WELD TESTING

QW-196.1 Macro-Examination.

QW-196.1.1 Welds shall be cross-sectioned, polished, and etched to reveal the weld metal. The section shall be examined at 10X magnification. Seam welding specimens shall be prepared as shown in Figure QW-462.7.3. The sectioned weldment shall be free of cracks, incomplete penetration, expulsions, and inclusions. Porosity shall not exceed one void in the transverse cross section or three voids in the longitudinal cross section of a specimen. The maximum dimension of any void shall not exceed 10% of the thickness of the weld bead.

QW-196.1.2 For spot and seam welds, the minimum diameter or width of the weld nugget shall be as follows in relation to thickness, t, of the thinner member. (**19**)

Material Thickness, in. (mm)	Weld Nugget Width
< 0.010 (0.25)	$6t$
≥ 0.010 (0.25) and < 0.020 (0.50)	$5t$
≥ 0.020 (0.50) and < 0.040 (1.00)	$4t$
≥ 0.040 (1.00) and < 0.069 (1.75)	$3t$
≥ 0.069 (1.75) and < 0.100 (2.54)	$2.50t$
≥ 0.100 (2.54) and < 0.118 (3.00)	$2.25t$
≥ 0.118 (3.00) and < 0.157 (4.00)	$2t$
≥ 0.157 (4.00)	$1.80t$

The weld depth (extent of fusion) shall be a minimum of 20% of the thickness of the thinner ply (in each member) and a maximum of 80% of the total thickness of all plies.

QW-196.1.3 For projection welds, the width of the nugget shall be not less than 80% of the width of the projection.

Copyrighted material licensed to Fermi National Laboratory by Clarivate Analytics (US) LLC, subscriptions.techstreet.com, downloaded on 2020-09-23 17:45:20 +0000 by Fermi National Laboratory User.
No further reproduction or distribution is permitted.

QW-196.2 Mechanical Testing.

(19) **QW-196.2.1** Shear test specimens shall be prepared as shown on Figure QW-462.9. For spot and projection welds, each test specimen shall produce a strength that, when calculated according to the following equation, is no less than that specified in Table QW/QB-422 for the weaker of the two base metals joined:

$$\text{strength} = \frac{\text{load to failure}}{\text{area of the nugget}}$$

where the area of the nugget = $\pi \times d^2/4$ and d equals the minimum diameter of the spot or projection weld at the faying surface. The diameter shall be no less than that specified in the table in QW-196.1.2 for the thinner of the two members joined.

QW-196.2.2 Peel test specimens shall be prepared as shown in Figure QW-462.8.1 for spot and projection welding and per Figure QW-462.8.2 for seam welding. The specimens shall be peeled or separated mechanically, and fracture shall occur in the base metal by tearing out of the weld in order for the specimen to be acceptable.

QW-197 LASER BEAM WELDING (LBW) LAP JOINT TESTS

QW-197.1 Procedure Qualification Specimens.

QW-197.1.1 Required Tests. Six tension shear specimens and eight macro specimens are required to qualify each procedure. The qualification test coupon shall be prepared in accordance with Figure QW-464.1. The tension shear specimens shall conform to the dimensions indicated in the table of Figure QW-464.1. The longitudinal and transverse sections indicated in Figure QW-464.1 shall be cross-sectioned as closely as possible through the centerline of the weld. A minimum of 1 in. (25 mm) shall be provided for examination of each longitudinal specimen. The transverse specimens shall be of sufficient length to include weld, the heat-affected zone, and portions of the unaffected base material. Cross-sections shall be smoothed and etched with a suitable etchant (see QW-470), and examined at a minimum magnification of 25X. The dimensions of the fusion zone and penetration of each weld of the transverse specimens shall be measured to the nearest hundredth of an inch and recorded.

QW-197.1.2 Acceptance Criteria — Tension Shear Tests. In order to pass the tension shear test(s), the requirements of QW-153 shall apply.

QW-197.1.3 Acceptance Criteria — Macro-Examination. In order to pass the macro-examination, each of the eight specimens shall meet the following criteria:

(a) The outline of the fusion zone shall be generally consistent in size and regular in shape and uniformity of penetration.

(b) The examination of the weld area shall reveal sound weld metal, complete fusion along the bond line, and complete freedom from cracks in the weld metal and heat-affected zone.

QW-197.2 Performance Qualification Specimens.

QW-197.2.1 Required Tests. A peel test specimen at least 6 in. (150 mm) long shall be prepared as shown in Figure QW-464.2 illustration (a) and macro specimens as shown in Figure QW-464.2 illustration (b). The peel test specimens shall be peeled apart to destruction and the fusion zone and penetration measured to the nearest hundredth of an inch. The end of each strip of the macro coupon shall be polished and etched to clearly reveal the weld metal. The width and depth of penetration of each weld shall be measured to the nearest hundredth of an inch. Each specimen shall be examined in accordance with QW-197.1.

QW-197.2.2 Acceptance Criteria — Peel Test and Macro-Examination. In order to pass the peel test and macro-examination, the dimensions of the fusion zone (averaged) and the penetration (averaged) shall be within the range of dimensions of those specified on the WPS that was used to make the test coupon.

QW-199 FLASH WELDING

QW-199.1 Procedure Qualification Test Coupons and Testing.

QW-199.1.1 Test Coupon Preparation. For coupons NPS 1 (DN 25) and smaller, four test welds shall be made, and for pipes over NPS 1 (DN 25), three test coupons shall be made using one set of welding parameters (i.e., the same equipment, base metals, joint preparation, and other essential variables to be utilized for production welding.) These variables shall be recorded on the qualification record.

QW-199.1.2 Tensile Tests. For pipes NPS 1 (DN 25) and smaller, and nontubular cross sections, two full-section tensile specimens shall be prepared in accordance with Figure QW-462.1(e). For pipes greater than NPS 1 (DN 25), two reduced section tension specimens shall be prepared in accordance with Figure QW-462.1(b) or Figure QW-462.1(c) from one coupon. For nontubular cross sections, two reduced section tension specimens shall be prepared in accordance with Figure QW-462.1(a) or Figure QW-462.1(d) from two of the coupons. The specimens shall be tested in accordance with QW-150.

QW-199.1.3 Section and Bend Testing. The entire circumference of each remaining pipe coupon shall be cut along the axis of the pipe into an even number of strips of a length sufficient to perform bend tests. The maximum width of each strip shall be 1½ in. (38 mm) and the minimum width

$$w = t + D/4 \text{ for pipes NPS 2 (DN 50) and smaller}$$

Copyrighted material licensed to Fermi National Laboratory by Clarivate Analytics (US) LLC, subscriptions.techstreet.com, downloaded on 2020-09-23 17:45:20 +0000 by Fermi National Laboratory User.
No further reproduction or distribution is permitted.

$$w = t + D/8 \text{ for pipes greater than NPS 2 (DN 50)}$$

where

D = OD of the tube
t = nominal wall thickness
w = width of the specimen

One edge of one strip from each coupon shall be polished to a 600 grit finish with the final grinding parallel to the long axis of the strip. The polished surface shall be examined at 5X magnification. No incomplete fusion or other open flaws on the polished surface are acceptable. Defects occurring in the base metal not associated with the weld may be disregarded. For nontubular cross sections, four side-bend specimens shall be prepared from the two remaining coupons as specified in Figure QW-462.2 and polished for examination.

All flash shall be removed from the strips and the welds shall be visually examined per QW-194. Half of the strips from each pipe specimen shall then be prepared as root bend specimens and the remaining strips shall be prepared as face bend specimens in accordance with QW-160. The specimens shall be tested in accordance with QW-160, except for the following:

(a) For P-No. 1, Groups 2 through 4 materials, the minimum bend radius (dimension B in Figure QW-466.1) shall be three times the thickness of the specimen.

(b) In lieu of QW-163, the sum of lengths of individual open flaws on the convex surface of all the bend test specimens taken from each pipe individually shall not exceed 5% of the outside circumference of that test pipe.

QW-199.2 Flash Welding — Performance Qualification Test Coupons and Testing. One test coupon shall be welded, cut into strips, visually examined, and bend tested in accordance with QW-199.1.3. Polishing and examination of a cross-section is not required.

Copyrighted material licensed to Fermi National Laboratory by Clarivate Analytics (US) LLC, subscriptions.techstreet.com, downloaded on 2020-09-23 17:45:20 +0000 by Fermi National Laboratory User.
No further reproduction or distribution is permitted.

APPENDIX I
ROUNDED INDICATION CHARTS

Illustration that appeared in this Appendix in the previous edition and addenda has been designated as Figure QW-191.1.2.2(b)(4), which follows QW-191.1.2.2(b)(3).

Copyrighted material licensed to Fermi National Laboratory by Clarivate Analytics (US) LLC, subscriptions.techstreet.com, downloaded on 2020-09-23 17:45:20 +0000 by Fermi National Laboratory User.
No further reproduction or distribution is permitted.

ARTICLE II
WELDING PROCEDURE QUALIFICATIONS

(19) QW-200 GENERAL

QW-200.1 Each organization shall prepare written Welding Procedure Specifications that are defined as follows:

(a) Welding Procedure Specification (WPS). A WPS is a written qualified welding procedure prepared to provide direction for making production welds to Code requirements. The WPS or other documents may be used to provide direction to the welder or welding operator to assure compliance with the Code requirements.

(b) Contents of the WPS. The completed WPS shall describe all of the essential, nonessential, and, when required, supplementary essential variables for each welding process used in the WPS. These variables are listed for each process in QW-250 and are defined in Article IV, Welding Data.

The WPS shall reference the supporting Procedure Qualification Record(s) (PQR) described in QW-200.2. The organization may include any other information in the WPS that may be helpful in making a Code weldment.

(c) Changes to the WPS. Changes may be made in the nonessential variables of a WPS to suit production requirements without requalification provided such changes are documented with respect to the essential, nonessential, and, when required, supplementary essential variables for each process. This may be by amendment to the WPS or by use of a new WPS.

Changes in essential or supplementary essential (when required) variables require requalification of the WPS (new or additional PQRs to support the change in essential or supplementary essential variables).

(d) Format of the WPS. The information required to be in the WPS may be in any format, written or tabular, to fit the needs of each organization, as long as every essential, nonessential, and, when required, supplementary essential variables outlined in QW-250 is included or referenced.

Form QW-482 (see Nonmandatory Appendix B) has been provided as a guide for the WPS. This Form includes the required data for the SMAW, SAW, GMAW, and GTAW processes. It is only a guide and does not list all required data for other processes. It also lists some variables that do not apply to all processes (e.g., listing shielding gas which is not required for SAW). The guide does not easily lend itself to multiple process procedure specification (e.g., GTAW root with SMAW fill).

QW-200.2 Each organization shall be required to prepare a procedure qualification record which is defined as follows:

(a) Procedure Qualification Record (PQR). The PQR is a record of variables recorded during the welding of the test coupons. It also contains the test results of the tested specimens. Recorded variables normally fall within a small range of the actual variables that will be used in production welding.

(b) Contents of the PQR. The completed PQR shall document all essential and, when required, supplementary essential variables of QW-250 for each welding process used during the welding of the test coupon. Nonessential or other variables used during the welding of the test coupon may be recorded at the organization's option. All variables, if recorded, shall be the actual variables (including ranges) used during the welding of the test coupon. If variables are not monitored during welding, they shall not be recorded. It is not intended that the full range or the extreme of a given range of variables to be used in production be used during qualification unless required due to a specific essential or, when required, supplementary essential variable.

The PQR shall be certified accurate by the organization. The organization may not subcontract the certification function. This certification is intended to be the organization's verification that the information in the PQR is a true record of the variables that were used during the welding of the test coupon and that the resulting tensile, bend, or macro (as required) test results are in compliance with Section IX.

One or more combinations of welding processes, filler metal, and other variables may be used when welding a test coupon. The approximate thickness of weld metal deposited, excluding weld reinforcement, shall be recorded for each set of essential and, when required, supplementary essential variables. Weld metal deposited using each set of variables shall be included in the tension, bend, toughness, and other mechanical test specimens that are required.

(c) Changes to the PQR. Changes to the PQR are not permitted except as described below. Editorial corrections or addenda to the PQR are permitted. An example of an editorial correction is an incorrect P-Number, F-Number, or A-Number that was assigned to a particular base metal or filler metal. An example of an addendum would be a change resulting from a Code change. For example, Section IX may assign a new F-Number to a filler metal or

Copyrighted material licensed to Fermi National Laboratory by Clarivate Analytics (US) LLC, subscriptions.techstreet.com, downloaded on 2020-09-23 17:45:20 +0000 by Fermi National Laboratory User.
No further reproduction or distribution is permitted.

adopt a new filler metal under an established F-Number. This may permit, depending on the particular construction Code requirements, an organization to use other filler metals that fall within that particular F-Number where, prior to the Code revision, the organization was limited to the particular electrode classification that was used during qualification. Additional information can be incorporated into a PQR at a later date provided the information is substantiated as having been part of the original qualification condition by lab record or similar data.

All changes to a PQR require recertification (including date) by the organization.

(d) Format of the PQR. Form QW-483 (see Nonmandatory Appendix B) has been provided as a guide for the PQR. The information required to be in the PQR may be in any format to fit the needs of each organization, as long as every essential and, when required, supplementary essential variable, required by QW-250, is included. Also the type of tests, number of tests, and test results shall be listed in the PQR.

Form QW-483 does not easily lend itself to cover combinations of welding processes or more than one F-Number filler metal in one test coupon. Additional sketches or information may be attached or referenced to record the required variables.

(e) Availability of the PQR. The PQR shall be available for review but need not be made available to the welder or welding operator.

(f) Multiple WPSs With One PQR or Multiple PQRs With One WPS. Several WPSs may be prepared from the data on a single PQR (e.g., a 1G plate PQR may support WPSs for the F, V, H, and O positions on plate or pipe within all other essential variables). A single WPS may cover several sets of essential variable ranges as long as a supporting PQR exists for each essential and, when required, supplementary essential variable [e.g., a single WPS may cover a thickness range from $^1/_{16}$ in. (1.5 mm) through $1^1/_4$ in. (32 mm) if PQRs exist for both the $^1/_{16}$ in. (1.5 mm) through $^3/_{16}$ in. (5 mm) and $^3/_{16}$ in. (5 mm) through $1^1/_4$ in. (32 mm) thickness ranges].

QW-200.3 To reduce the number of welding procedure qualifications required, P-Numbers are assigned to base metals dependent on characteristics such as composition, weldability, and mechanical properties, where this can logically be done; and for steel and steel alloys (Table QW/QB-422) Group Numbers are assigned additionally to P-Numbers. These Group Numbers classify the metals within P-Numbers for the purpose of procedure qualification where toughness requirements are specified. The assignments do not imply that base metals may be indiscriminately substituted for a base metal which was used in the qualification test without consideration of the compatibility from the standpoint of metallurgical properties, postweld heat treatment, design, mechanical properties, and service requirements. Where toughness is a consideration, it is presupposed that the base metals meet the specific requirements.

In general, toughness requirements are mandatory for all P-No. 11 quenched and tempered metals, for low temperature applications of other metals as applied to Section VIII, and for various classes of construction required by Section III. Acceptance criteria for the toughness tests are as established in the other Sections of the Code.

QW-200.4 Combination of Welding Procedures.

(a) More than one WPS having different essential, supplementary essential, or nonessential variables may be used in a single production joint. Each WPS may include one or a combination of processes, filler metals, or other variables.

Where more than one WPS specifying different processes, filler metals, or other essential or supplementary essential variables is used in a joint, QW-451 shall be used to determine the range of base metal thickness and maximum weld metal thickness qualified for each process, filler metal, or set of variables, and those limits shall be observed.

When following a WPS that has more than one welding process, filler metal, or set of variables, each process, filler metal, or set of variables may be used individually or in different combinations, provided

(1) the essential, nonessential, and required supplementary essential variables associated with the process, filler metal, or set of variables are applied

(2) the base metal and deposited weld metal thickness limits of QW-451 for each process, filler metal, or set of variables are applied

(b) As an alternative to (a), when making root deposits only using GTAW, SMAW, GMAW, PAW, LBW, LLBW, and SAW, or combinations of these processes, a PQR for a process recording a test coupon that was at least $^1/_2$ in. (13 mm) thick may be combined with one or more other PQRs recording another welding process and any greater base metal thickness. In this case, the process recorded on the first PQR may be used to deposit the root layers using the process(es) recorded on that PQR up to $2t$ (for short-circuiting type of GMAW, see QW-404.32) in thickness on base metal of the maximum thickness qualified by the other PQR(s) used to support the WPS. The requirements of Note (1) of Tables QW-451.1 and QW-451.2 shall apply.

QW-201 ORGANIZATIONAL RESPONSIBILITY

The organization shall certify that they have qualified each Welding Procedure Specification, performed the procedure qualification test, and documented it with the necessary Procedure Qualification Record (PQR).

Copyrighted material licensed to Fermi National Laboratory by Clarivate Analytics (US) LLC, subscriptions.techstreet.com, downloaded on 2020-09-23 17:45:20 +0000 by Fermi National Laboratory User.
No further reproduction or distribution is permitted.

QW-202 TYPE OF TESTS REQUIRED

QW-202.1 Mechanical Tests. The type and number of test specimens that shall be tested to qualify a groove weld procedure are given in QW-451, and shall be removed in a manner similar to that shown in Figures QW-463.1(a) through QW-463.1(f). If any test specimen required by QW-451 fails to meet the applicable acceptance criteria, the test coupon shall be considered as failed.

When it can be determined that the cause of failure is not related to welding parameters, another test coupon may be welded using identical welding parameters.

Alternatively, if adequate material of the original test coupon exists, additional test specimens may be removed as close as practicable to the original specimen location to replace the failed test specimens.

When it has been determined that the test failure was caused by an essential or supplementary essential variable, a new test coupon may be welded with appropriate changes to the variable(s) that was determined to cause the test failure. If the new test passes, the essential and supplementary variables shall be documented on the PQR.

When it is determined that the test failure was caused by one or more welding related factors other than essential or supplementary essential variables, a new test coupon may be welded with the appropriate changes to the welding related factors that were determined to cause the test failure. If the new test passes, the welding related factors that were determined to cause the previous test failure shall be addressed by the organization to ensure that the required properties are achieved in the production weldment.

Where qualification is for fillet welds only, the requirements are given in QW-202.2(c); and where qualification is for stud welds only, the requirements are given in QW-202.5.

(19) **QW-202.2 Groove and Fillet Welds**

(a) Qualification for Groove Full Penetration Welds. Groove-weld test coupons shall qualify the thickness ranges of both base metal and deposited weld metal to be used in production. Limits of qualification shall be in accordance with QW-451. The thickness, t, of deposited weld metal in QW-451 shall be exclusive of weld reinforcement. WPS qualification for groove welds shall be made on groove welds using tension and guided-bend specimens. Toughness tests shall be made when required by other Section(s) of the Code. The WPS shall be qualified for use with groove welds within the range of essential variables listed.

When dissimilar thickness test coupons are welded, the "Range of Thickness T of Base Metal, Qualified" in QW-451 shall be determined individually for each base metal in the test coupon. When the thicker test coupon is tapered to provide a thickness transition at the weld, the qualified range shall be based on the base metal thickness adjacent to the toe of the weld at the thinnest end of the transition. The test specimens for tensile and bend tests may be machined to the thickness required for the thinner base metal prior to testing.

(b) Qualification for Partial Penetration Groove Welds. Partial penetration groove welds shall be qualified in accordance with the requirements of QW-451 for both base metal and deposited weld metal thickness, except there need be no upper limit on the base metal thickness provided qualification was made on base metal having a thickness of $1\frac{1}{2}$ in. (38 mm) or more. When dissimilar thickness test coupons are welded, the provisions of (a) for dissimilar thickness test coupons shall be met.

(c) Qualification for Fillet Welds. WPS qualification for fillet welds may be made on groove-weld test coupons using test specimens specified in (a) or (b). Fillet-weld procedures so qualified may be used for welding all thicknesses of base metal for all sizes of fillet welds, and all diameters of pipe or tube in accordance with Table QW-451.4. Nonpressure-retaining fillet welds, as defined in other Sections of the Code, may as an alternate be qualified with fillet welds only. Tests shall be made in accordance with QW-180. Limits of qualification shall be in accordance with Table QW-451.3.

QW-202.3 Weld Repair and Buildup. WPS qualified on groove welds shall be applicable for weld repairs to groove and fillet welds and for weld buildup under the following provisions:

(a) There is no limitation on the thickness of base metal or deposited weld metal for fillet welds.

(b) For other than fillet welds, the thickness range for base metal and deposited weld metal for each welding process shall be in accordance with QW-451, except there need be no upper limit on the base metal thickness provided qualification was made on base metal having a thickness of $1\frac{1}{2}$ in. (38 mm) or more.

QW-202.4 Dissimilar Base Metal Thicknesses. WPS qualified on groove welds shall be applicable for production welds between dissimilar base metal thicknesses provided:

(a) the thickness of the thinner member shall be within the range permitted by QW-451

(b) the thickness of the thicker member shall be as follows:

(1) For P-No. 8, P-No. 41, P-No. 42, P-No. 43, P-No. 44, P-No. 45, P-No. 46, P-No. 49, P-No. 51, P-No. 52, P-No. 53, P-No. 61, and P-No. 62 metal, there shall be no limitation on the maximum thickness of the thicker production member in joints of similar P-Number materials provided qualification was made on base metal having a thickness of $\frac{1}{4}$ in. (6 mm) or greater.

(2) For all other metal, the thickness of the thicker member shall be within the range permitted by QW-451, except there need be no limitation on the

Copyrighted material licensed to Fermi National Laboratory by Clarivate Analytics (US) LLC, subscriptions.techstreet.com, downloaded on 2020-09-23 17:45:20 +0000 by Fermi National Laboratory User.
No further reproduction or distribution is permitted.

maximum thickness of the thicker production member provided qualification was made on base metal having a thickness of $1\frac{1}{2}$ in. (38 mm) or more.

More than one procedure qualification may be required to qualify for some dissimilar thickness combinations.

QW-202.5 Stud Welding. Procedure qualification tests for stud welds shall be made in accordance with QW-192. The procedure qualification tests shall qualify the welding procedures for use within the range of the essential variables of Table QW-261. For studs welded to other than P-No. 1 metals, five additional welds shall be made and subjected to a macro-test, except that this is not required for studs used for extended heating surfaces.

QW-202.6 Tube-to-Tubesheet Qualification. When the applicable Code Section requires the use of QW-193 for tube-to-tubesheet demonstration mockup qualification tests, QW-193.1 shall apply. If specific qualification test requirements are not specified by the applicable Code Section, tube-to-tubesheet welds shall be qualified with one of the following methods:

(a) groove welds per the requirements of QW-202.2 and QW-202.4

(b) a demonstration mockup per the requirements of QW-193.1

(c) fillet welds per the requirements of QW-202.2(c) (for nonpressure-retaining tube-to-tubesheet welds only)

QW-203 LIMITS OF QUALIFIED POSITIONS FOR PROCEDURES

Unless specifically required otherwise by the welding variables (QW-250), a qualification in any position qualifies the procedure for all positions. The welding process and electrodes must be suitable for use in the positions permitted by the WPS. A welder or welding operator making and passing the WPS qualification test is qualified for the position tested. see QW-301.2.

QW-210 PREPARATION OF TEST COUPON

QW-211 BASE METAL

The base metals may consist of either plate, pipe, or other product forms. Qualification in plate also qualifies for pipe welding and vice versa. The dimensions of the test coupon shall be sufficient to provide the required test specimens.

QW-211.1 A weld metal overlay deposited on the base metal following a qualified WPS may be considered as the same P-Number as any base metal having a nominally matching chemical analysis.

QW-212 TYPE AND DIMENSIONS OF GROOVE WELDS

Except as otherwise provided in QW-250, the type and dimensions of the welding groove are not essential variables.

QW-214 CORROSION-RESISTANT WELD METAL OVERLAY (19)

QW-214.1 The size of test coupons, limits of qualification, required examinations and tests, and test specimens shall be as specified in QW-214.2 and Table QW-453.

QW-214.2 The qualification test coupon for procedure qualification shall consist of base metal not less than 6 in. (150 mm) × 6 in. (150 mm). The weld overlay cladding shall be a minimum of $1\frac{1}{2}$ in. (38 mm) wide by approximately 6 in. (150 mm) long. For qualification on pipe, the pipe length shall be a minimum of 6 in. (150 mm) and the diameter shall be the minimum needed to allow the required number of test specimens. The weld overlay shall be continuous around the circumference of the test coupon.

(a) The corrosion-resistant surface shall be examined by the liquid penetrant method and shall meet the acceptance standards as specified in QW-195.

(b) Following the liquid penetrant examination, four guided side-bend tests shall be made from the test coupon in accordance with QW-161. The test specimens shall be cut so that there are either two specimens parallel and two specimens perpendicular to the direction of the welding, or four specimens perpendicular to the direction of the welding. For coupons that are less than $\frac{3}{8}$ in. (10 mm) thick, the width of the side-bend specimens may be reduced to the thickness of the test coupon. The side-bend specimens shall be removed from locations specified in Figure QW-462.5(c) or Figure QW-462.5(d).

(c) When a chemical composition is specified in the WPS, chemical analysis specimens shall be removed at locations specified in Figure QW-462.5(b) or Figure QW-462.5(e). The chemical analysis shall be performed in accordance with Figure QW-462.5(a) and shall be within the range specified in the WPS. This chemical analysis is not required when a chemical composition is not specified on the WPS.

QW-214.3 Essential variables shall be as specified in QW-250 for the applicable welding process.

QW-215 ELECTRON BEAM WELDING, LASER BEAM WELDING, AND LOW-POWER DENSITY LASER BEAM WELDING

QW-215.1 For electron beam welding and laser beam welding (excluding low-power density laser beam welding), the WPS qualification test coupon shall be prepared with the joint geometry duplicating that to be used in production. If the production weld is to include a lap-over (completing the weld by rewelding over the starting area of the weld, as for a girth weld), such lap-over shall be included in the WPS qualification test coupon.

QW-215.2 The mechanical testing requirements of QW-451 shall apply.

Copyrighted material licensed to Fermi National Laboratory by Clarivate Analytics (US) LLC, subscriptions.techstreet.com, downloaded on 2020-09-23 17:45:20 +0000 by Fermi National Laboratory User.
No further reproduction or distribution is permitted.

QW-215.3 Essential variables shall be as specified in Tables QW-260, QW-264, and QW-264.2 for the applicable welding process.

(19) QW-216 HARD-FACING WELD METAL OVERLAY

Hard-facing weld metal overlay refers to weld deposits made, using a variety of processes, to deter the effects of wear and/or abrasion. The requirements specified in QW-216.1 through QW-216.5 apply regardless of which hard-facing process is used.

QW-216.1 The size of test coupons, limits of qualification, required examinations and tests, and test specimens shall be as specified in Table QW-453.

QW-216.2 The test base metal coupon for procedure qualification shall have minimum dimensions of 6 in. (150 mm) wide × approximately 6 in. (150 mm) long with a hard-faced layer a minimum of $1\frac{1}{2}$ in. (38 mm) wide × 6 in. (150 mm) long. The minimum hard-faced thickness shall be as specified in the WPS. Alternatively, the qualification may be performed on a test base metal coupon that represents the size of the production part. For qualification on pipe, the pipe length shall be 6 in. (150 mm) minimum and the diameter shall be the minimum needed to allow the required number of test specimens. The weld overlay shall be continuous around the circumference of the test coupon.

(a) The hard-facing surface shall be examined by the liquid penetrant method and shall meet the acceptance standards in QW-195.2 or as specified in the WPS. Surface conditioning prior to liquid penetrant examination is permitted.

(b) After surface conditioning to the minimum thickness specified in the WPS, a minimum of three hardness readings shall be made on each of the specimens from the locations shown in Figure QW-462.5(b) or Figure QW-462.5(e). All readings shall meet the requirements of the WPS.

(c) The base metal shall be sectioned transversely to the direction of the hard-facing overlay. The two faces of the hard facing exposed by sectioning shall be polished and etched with a suitable etchant and shall be visually examined with 5X magnification for cracks in the base metal or the heat-affected zone, lack of fusion, or other linear defects. The overlay and base metal shall meet the requirements specified in the WPS. All exposed faces shall be examined. See Figure QW-462.5(b) for pipe and Figure QW-462.5(e) for plate.

(d) When a chemical composition is specified in the WPS, chemical analysis specimens shall be removed at locations specified in Figure QW-462.5(b) or Figure QW-462.5(e). The chemical analysis shall be performed in accordance with Figure QW-462.5(a) and shall be within the range specified in the WPS. This chemical analysis is not required when a chemical composition is not specified on the WPS.

QW-216.3 Welding variables shall be as specified in QW-250 for the applicable process.

QW-216.4 Where Spray Fuse methods of hard facing (e.g., Oxyfuel and Plasma Arc) are to be used, the coupons for these methods shall be prepared and welding variables applied in accordance with QW-216.1 and QW-216.3, respectively.

QW-216.5 If a weld deposit is to be used under a hard-facing weld metal overlay, a base metal with an assigned P-Number and a chemical analysis nominally matching the weld deposit chemical analysis may be substituted to qualify the PQR.

QW-217 JOINING OF CLAD MATERIALS (19)

The WPS for groove welds in clad metal shall be qualified as provided in (a) when any part of the cladding thickness, as permitted by the referencing Code Section, is included in the design calculations. Either (a) or (b) may be used when the cladding thickness is not included in the design calculations.

(a) The essential and nonessential variables of QW-250 shall apply for each welding process used in production. The procedure qualification test coupon shall be made using the same P-Number base metal, cladding, and welding process, and filler metal combination to be used in production welding. For metal not included in Table QW/QB-422, the metal used in the test plate shall be within the range of chemical composition of that to be used in production. The qualified thickness range for the base metal and filler metal(s) shall be based on the actual test coupon thickness for each as applied to QW-451, except that the minimum thickness of filler metal joining the cladding portion of the weldment shall be based on a chemical analysis performed in accordance with Table QW-453. Tensile and bend tests required in QW-451 for groove welds shall be made, and they shall contain the full thickness of cladding through the reduced section of the specimen. The bond line between the original cladding and the base metal may be disregarded when evaluating side-bend tests if the cladding was applied by a process other than fusion welding.

(b) The essential and nonessential variables of QW-250 shall apply for each welding process used in production for joining the base metal portion of the weldment. The PQRs that support this portion of the WPS need not be based on test coupons made with clad metal. For the corrosion-resistant overlay portion of the weld, the essential variables of QW-251.4 shall apply and the test coupon and testing shall be in accordance with Table QW-453. The WPS shall limit the depth of the groove, which will receive the corrosion-resistant overlay in order to ensure development of the full strength of the underlying weld in the base metal.

Copyrighted material licensed to Fermi National Laboratory by Clarivate Analytics (US) LLC, subscriptions.techstreet.com, downloaded on 2020-09-23 17:45:20 +0000 by Fermi National Laboratory User.
No further reproduction or distribution is permitted.

QW-218 APPLIED LININGS

QW-218.1 WPSs for attaching applied linings shall be qualified in accordance with QW-202.2(a), QW-202.2(b), or QW-202.2(c).

QW-218.2 As an alternative to the above, each process to be used in attaching applied linings to base metal shall be qualified on a test coupon welded into the form and arrangement to be used in construction using materials that are within the range of chemical composition of the metal to be used for the base plate, the lining, and the weld metal. The welding variables of QW-250 shall apply except for those regarding base metal or weld metal thickness. Qualification tests shall be made for each position to be used in production welding in accordance with Table QW-461.9, except that qualification in the vertical position, uphill progression shall qualify for all positions. One cross-section for each position tested shall be sectioned, polished, and etched to clearly show the demarcation between the base metal and the weld metal. In order to be acceptable, each specimen shall exhibit complete fusion of the weld metal with the base metal and freedom from cracks.

QW-218.3 When chemical analysis of the weld deposit for any elements is required, a chemical analysis shall be performed per Table QW-453, Note 9 for those elements.

QW-219 FLASH WELDING

Flash welding shall be limited to automatic electrical resistance flash welding. Procedure qualification tests shall be conducted in accordance with QW-199.1.

QW-219.1 Tolerances on Variables. Flash welding variables that may require adjustment during production welding are synergistically related. Accordingly, even though the variables shown in Table QW-265 provide tolerances on many welding variables, the WPS shall specify the same specific variables shown on the PQR with tolerance shown for no more than one variable (e.g., if it is desired to provide a tolerance on the upset current, all other variables shown on the WPS must be the same as they are shown on the PQR). If it is desired to provide tolerances in the WPS for two variables, the first variable with a tolerance shall be set at the midpoint of its tolerance and two test coupons shall be welded with each of the upper and lower extremes of the tolerance for the second variable (i.e., four coupons must be welded). These coupons shall be examined and tested in accordance with QW-199.1.3.

If it is desired to provide tolerance for a third variable, the first two variables shall be set at the midpoint of their tolerance, and two test coupons shall be welded with each of the upper and lower extremes of the new tolerances for the third variable (i.e., four coupons must be welded). These coupons shall be examined and tested in accordance with QW-199.1.3.

No more than three essential variables on a WPS may show tolerances.

Production tests conducted in accordance with the requirements of other Sections may be used to satisfy this requirement.

QW-220 HYBRID WELDING PROCEDURE VARIABLES

Requirements of QW-221 through QW-223 shall be observed for all hybrid welding procedure qualifications.

QW-221 ESSENTIAL VARIABLES FOR HYBRID WELDING

The following essential variables are in addition to the welding variables for each welding process used during hybrid welding provided in QW-250:

(a) an addition or deletion of welding processes used in a hybrid welding process from those used during qualification.

(b) a change in the process sequence used in a hybrid welding process from that used during qualification.

(c) a change in the process separation used in a hybrid welding process greater than 10% from that used during qualification (e.g., measured at the weld surface, measured between the welding torch and laser, etc.)

(d) a change in any angle, between each individual welding process used in a hybrid welding process or a change in any angle between the hybrid welding process and the material to be welded, of greater than 10 deg from that used during qualification.

(e) a change in the height between the individual welding processes used in a hybrid welding process and the material surface or a change in the height between the hybrid welding process and the material surface greater than 10% from that used during qualification.

QW-222 WELDING PROCESS RESTRICTIONS

The hybrid welding process shall be limited to machine or automatic welding.

QW-223 TEST COUPON PREPARATION AND TESTING

The hybrid welding procedure qualification test coupon shall be prepared in accordance with the rules in QW-210 and tested in accordance with the rules in QW-202.

QW-250 WELDING VARIABLES

QW-251 GENERAL

QW-251.1 Types of Variables for Welding Procedure Specifications (WPS). These variables (listed for each welding process in Tables QW-252 through QW-267) are subdivided into essential variables, supplementary essential variables, and nonessential variables

Copyrighted material licensed to Fermi National Laboratory by Clarivate Analytics (US) LLC, subscriptions.techstreet.com, downloaded on 2020-09-23 17:45:20 +0000 by Fermi National Laboratory User.
No further reproduction or distribution is permitted.

(QW-401). The "Brief of Variables" listed in the tables are for reference *only*. See the complete variable in Welding Data of Article IV.

QW-251.2 Essential Variables. Essential variables are those in which a change, as described in the specific variables, is considered to affect the mechanical properties of the weldment, and shall require requalification of the WPS.

Supplementary essential variables are required for metals for which other Sections specify toughness tests and are in addition to the essential variables for each welding process.

QW-251.3 Nonessential Variables. Nonessential variables are those in which a change, as described in the specific variables, may be made in the WPS without requalification.

QW-251.4 Special Processes.

(a) The special process essential variables for corrosion-resistant and hard-surfacing weld metal overlays are as indicated in the following tables for the specified process. Only the variables specified for special processes shall apply. A change in the corrosion-resistant or hard-surfacing welding process shall require requalification.

(b) WPS qualified for corrosion-resistant and hard-surfacing overlay welding, in accordance with other Sections when such qualification rules were included in those Sections, may be used with the same provisions as provided in QG-101.

Copyrighted material licensed to Fermi National Laboratory by Clarivate Analytics (US) LLC, subscriptions.techstreet.com, downloaded on 2020-09-23 17:45:20 +0000 by Fermi National Laboratory User.
No further reproduction or distribution is permitted.

Table QW-252
Welding Variables Procedure Specifications (WPS) — Oxyfuel Gas Welding (OFW)

Paragraph		Brief of Variables	Essential	Supplementary Essential	Nonessential
QW-402 Joints	.1	ϕ Groove design			X
	.2	± Backing			X
	.3	ϕ Backing comp.			X
	.10	ϕ Root spacing			X
QW-403 Base Metals	.1	ϕ P-Number	X		
	.2	Max. *T* Qualified	X		
QW-404 Filler Metals	.3	ϕ Size			X
	.4	ϕ F-Number	X		
	.5	ϕ A-Number	X		
	.12	ϕ Classification	X		
QW-405 Positions	.1	+ Position			X
QW-406 Preheat	.1	Decrease > 100°F (55°C)			X
QW-407 PWHT	.1	ϕ PWHT	X		
QW-408 Gas	.7	ϕ Type fuel gas	X		
QW-410 Technique	.1	ϕ String or weave			X
	.2	ϕ Flame characteristics			X
	.4	ϕ ← → Technique			X
	.5	ϕ Method cleaning			X
	.26	± Peening			X
	.64	Use of thermal processes	X		

Legend:

+ Addition	> Increase or greater than	↑ Uphill	← Forehand	ϕ Change
− Deletion	< Decrease or less than	↓ Downhill	→ Backhand	

Copyrighted material licensed to Fermi National Laboratory by Clarivate Analytics (US) LLC, subscriptions.techstreet.com, downloaded on 2020-09-23 17:45:20 +0000 by Fermi National Laboratory User.
No further reproduction or distribution is permitted.

Table QW-252.1
Welding Variables Procedure Specifications (WPS) — Oxyfuel Gas Welding (OFW)

Paragraph		Special Process Essential Variables: Hard-Facing Overlay (QW-216)	Special Process Essential Variables: Corrosion-Resistant Overlay (QW-214)	Hard-Facing Spray Fuse (QW-216)
QW-402 Joint	.16	< Finished *t*		
	.17			> Finished *t*
QW-403 Base Metals	.20	ϕ P-Number		ϕ P-Number
	.23	ϕ *T* Qualified	ϕ *T* Qualified	ϕ *T* Qualified
QW-404 Filler Metals	.12	ϕ Classification		ϕ Classification
	.42			> 5% Particle size range
	.46			ϕ Powder feed rate
QW-405 Positions	.4	+ Position		+ Position
QW-406 Preheat	.4	Dec. > 100°F (55°C) preheat > Interpass		Dec. > 100°F (55°C) preheat > Interpass
	.5			ϕ Preheat maint.
QW-407 PWHT	.6	ϕ PWHT		ϕ PWHT
	.7			ϕ PWHT after fusing
QW-408 Gas	.7	ϕ Type of fuel gas		
	.14	ϕ Oxyfuel gas pressure		
	.16			ϕ > 5% Gas feed rate
	.19			ϕ Plasma or feed gas comp.
QW-410 Technique	.38	ϕ Multiple to single layer		ϕ Multiple to single layer
	.39	ϕ Torch type, tip sizer		
	.44			ϕ > 15% Torch to workpiece
	.45			ϕ Surface prep.
	.46			ϕ Spray torch
	.47			ϕ > 10% Fusing temp. or method

Legend:

+ Addition	> Increase or greater than	↑ Uphill	← Forehand	ϕ Change
− Deletion	< Decrease or less than	↓ Downhill	→ Backhand	

Copyrighted material licensed to Fermi National Laboratory by Clarivate Analytics (US) LLC, subscriptions.techstreet.com, downloaded on 2020-09-23 17:45:20 +0000 by Fermi National Laboratory User.
No further reproduction or distribution is permitted.

(19)

Table QW-253
Welding Variables Procedure Specifications (WPS) — Shielded Metal-Arc Welding (SMAW)

Paragraph		Brief of Variables	Essential	Supplementary Essential	Nonessential
QW-402 Joints	.1	ϕ Groove design			X
	.4	− Backing			X
	.10	ϕ Root spacing			X
	.11	± Retainers			X
QW-403 Base Metals	.5	ϕ Group Number		X	
	.6	*T* Limits toughness		X	
	.8	ϕ *T* Qualified	X		
	.9	*t* Pass > $^1/_2$ in. (13 mm)	X		
	.11	ϕ P-No. qualified	X		
QW-404 Filler Metals	.4	ϕ F-Number	X		
	.5	ϕ A-Number	X		
	.6	ϕ Diameter			X
	.7	ϕ Diameter > $^1/_4$ in. (6 mm)		X	
	.12	ϕ Classification		X	
	.30	ϕ *t*	X		
	.33	ϕ Classification			X
QW-405 Positions	.1	+ Position			X
	.3	ϕ ↑↓ Vertical welding			X
QW-406 Preheat	.1	Decrease > 100°F (55°C)	X		
	.2	ϕ Preheat maint.			X
	.3	Increase > 100°F (55°C) (IP)		X	
QW-407 PWHT	.1	ϕ PWHT	X		
	.2	ϕ PWHT (T & T range)		X	
QW-409 Electrical Characteristics	.1	> Heat input		X	
	.4	ϕ Current or polarity		X	X
	.8	ϕ I & E range			X
QW-410 Technique	.1	ϕ String or weave			X
	.5	ϕ Method cleaning			X
	.6	ϕ Method back gouge			X
	.9	ϕ Multiple to single pass/side		X	X
	.25	ϕ Manual or automatic			X
	.26	± Peening			X
	.64	Use of thermal processes	X		

Legend:

+ Addition	> Increase or greater than	↑ Uphill	← Forehand	ϕ Change
− Deletion	< Decrease or less than	↓ Downhill	→ Backhand	

Copyrighted material licensed to Fermi National Laboratory by Clarivate Analytics (US) LLC, subscriptions.techstreet.com, downloaded on 2020-09-23 17:45:20 +0000 by Fermi National Laboratory User.
No further reproduction or distribution is permitted.

Table QW-253.1
Welding Variables Procedure Specifications (WPS) — Shielded Metal-Arc Welding (SMAW)

Special Process Variables				
		Essential Variables		
Paragraph		Hard-Facing Overlay (HFO) (QW-216)	Corrosion-Resistant Overlay (CRO) (QW-214)	Nonessential Variables for HFO and CRO
QW-402 Joints	.16	< Finished t	< Finished t	
QW-403 Base Metals	.20	ϕ P-Number	ϕ P-Number	
	.23	ϕ T Qualified	ϕ T Qualified	
QW-404 Filler Metals	.12	ϕ Classification		
	.37		ϕ A-Number	
	.38			ϕ Diameter (1st layer)
QW-405 Positions	.4	+ Position	+ Position	
QW-406 Preheat	.4	Dec. > 100°F (55°C) preheat > Interpass	Dec. > 100°F (55°C) preheat > Interpass	
QW-407 PWHT	.6	ϕ PWHT		
	.9		ϕ PWHT	
QW-409 Electrical Characteristics	.4	ϕ Current or polarity	ϕ Current or polarity	
	.8			ϕ I & E range
	.22	Inc. > 10% 1st layer	Inc. > 10% 1st layer	
QW-410 Technique	.1			ϕ String or weave
	.5			ϕ Method of cleaning
	.26			± Peening
	.38	ϕ Multiple to single layer	ϕ Multiple to single layer	

Legend:

+ Addition	> Increase or greater than	↑ Uphill	← Forehand	ϕ Change
− Deletion	< Decrease or less than	↓ Downhill	→ Backhand	

Copyrighted material licensed to Fermi National Laboratory by Clarivate Analytics (US) LLC, subscriptions.techstreet.com, downloaded on 2020-09-23 17:45:20 +0000 by Fermi National Laboratory User.
No further reproduction or distribution is permitted.

Table QW-254
Welding Variables Procedure Specifications (WPS) — Submerged-Arc Welding (SAW)

Paragraph		Brief of Variables	Essential	Supplementary Essential	Nonessential
QW-402 Joints	.1	ϕ Groove design			X
	.4	– Backing			X
	.10	ϕ Root spacing			X
	.11	± Retainers			X
QW-403 Base Metals	.5	ϕ Group Number		X	
	.6	*T* Limits		X	
	.8	ϕ *T* Qualified	X		
	.9	*t* Pass $^1/_2$ in. (13 mm)	X		
	.11	ϕ P-No. qualified	X		
QW-404 Filler Metals	.4	ϕ F-Number	X		
	.5	ϕ A-Number	X		
	.6	ϕ Diameter			X
	.9	ϕ Flux-wire class.	X		
	.10	ϕ Alloy flux	X		
	.24	± or ϕ Supplemental	X		
	.27	ϕ Alloy elements	X		
	.29	ϕ Flux designation			X
	.30	ϕ *t*	X		
	.33	ϕ Classification			X
	.34	ϕ Flux type	X		
	.35	ϕ Flux-wire class.		X	X
	.36	Recrushed slag	X		
QW-405 Positions	.1	+ Position			X
QW-406 Preheat	.1	Decrease > 100°F (55°C)	X		
	.2	ϕ Preheat maint.			X
	.3	Increase > 100°F (55°C) (IP)		X	
QW-407 PWHT	.1	ϕ PWHT	X		
	.2	ϕ PWHT (T & T range)		X	
QW-409 Electrical Characteristics	.1	> Heat input		X	
	.4	ϕ Current or polarity		X	X
	.8	ϕ I & E range			X
QW-410 Technique	.1	ϕ String or weave			X
	.5	ϕ Method cleaning			X
	.6	ϕ Method back gouge			X
	.7	ϕ Oscillation			X
	.8	ϕ Tube-work distance			X
	.9	ϕ Multi to single pass per side		X	X
	.10	ϕ Single to multi electrodes		X	X
	.15	ϕ Electrode spacing			X
	.25	ϕ Manual or automatic			X
	.26	± Peening			X
	.64	Use of thermal processes	X		

Legend:

+ Addition	> Increase or greater than	↑ Uphill	← Forehand	ϕ Change
– Deletion	< Decrease or less than	↓ Downhill	→ Backhand	

Copyrighted material licensed to Fermi National Laboratory by Clarivate Analytics (US) LLC, subscriptions.techstreet.com, downloaded on 2020-09-23 17:45:20 +0000 by Fermi National Laboratory User.
No further reproduction or distribution is permitted.

Table QW-254.1
Welding Variables Procedure Specifications (WPS) — Submerged-Arc Welding (SAW)

Special Process Variables				
		Essential Variables		
Paragraph		Hard-Facing Overlay (HFO) (QW-216)	Corrosion-Resistant Overlay (CRO) (QW-214)	Nonessential Variables for HFO and CRO
QW-402 Joints	.16	< Finished *t*	< Finished *t*	
QW-403 Base Metals	.20	ϕ P-Number	ϕ P-Number	
	.23	ϕ *T* Qualified	ϕ *T* Qualified	
QW-404 Filler Metals	.6			ϕ Nominal size of electrode
	.12	ϕ Classification		
	.24	± or ϕ > 10% in supplemental filler metal	± or ϕ > 10% in supplemental filler metal	
	.27	ϕ Alloy elements		
	.37		ϕ A-Number	
	.39	ϕ Nominal flux comp.	ϕ Nominal flux comp.	
	.57	> Strip thickness or width	> Strip thickness or width	
QW-405 Positions	.4	+ Position	+ Position	
QW-406 Preheat	.4	Dec. > 100°F (55°C) preheat > Interpass	Dec. > 100°F (55°C) preheat > Interpass	
QW-407 PWHT	.6	ϕ PWHT		
	.9		ϕ PWHT	
QW-409 Electrical Characteristics	.4	ϕ Current or polarity	ϕ Current or polarity	
	.8			ϕ I & E range
	.26	1st layer — Heat input > 10%	1st layer — Heat input > 10%	
QW-410 Technique	.1			ϕ String or weave
	.5			ϕ Method of cleaning
	.7			ϕ Oscillation
	.8			ϕ Tube to work distance
	.15			ϕ Electrode spacing
	.25			ϕ Manual or automatic
	.26			± Peening
	.38	ϕ Multiple to single layer	ϕ Multiple to single layer	
	.40		− Supplemental device	
	.50	ϕ No. of electrodes	ϕ No. of electrodes	

Legend:

+ Addition	> Increase or greater than	↑ Uphill	← Forehand	ϕ Change
− Deletion	< Decrease or less than	↓ Downhill	→ Backhand	

Copyrighted material licensed to Fermi National Laboratory by Clarivate Analytics (US) LLC, subscriptions.techstreet.com, downloaded on 2020-09-23 17:45:20 +0000 by Fermi National Laboratory User.
No further reproduction or distribution is permitted.

(19)

Table QW-255
Welding Variables Procedure Specifications (WPS) — Gas Metal-Arc Welding (GMAW and FCAW)

Paragraph		Brief of Variables	Essential	Supplementary Essential	Nonessential
QW-402 Joints	.1	ϕ Groove design			X
	.4	− Backing			X
	.10	ϕ Root spacing			X
	.11	± Retainers			X
QW-403 Base Metals	.5	ϕ Group Number		X	
	.6	*T* Limits		X	
	.8	ϕ *T* Qualified	X		
	.9	*t* Pass > ½ in. (13 mm)	X		
	.10	*T* limits (S. cir. arc)	X		
	.11	ϕ P-No. qualified	X		
QW-404 Filler Metals	.4	ϕ F-Number	X		
	.5	ϕ A-Number	X		
	.6	ϕ Diameter			X
	.12	ϕ Classification		X	
	.23	ϕ Filler metal product form	X		
	.24	± or ϕ Supplemental	X		
	.27	ϕ Alloy elements	X		
	.30	ϕ *t*	X		
	.32	*t* Limits (S. cir. arc)	X		
	.33	ϕ Classification			X
QW-405 Positions	.1	+ Position			X
	.3	ϕ ↑↓ Vertical welding			X
QW-406 Preheat	.1	Decrease > 100°F (55°C)	X		
	.2	ϕ Preheat maint.			X
	.3	Increase > 100°F (55°C) (IP)		X	
QW-407 PWHT	.1	ϕ PWHT	X		
	.2	ϕ PWHT (T & T range)		X	
QW-408 Gas	.1	± Trail or ϕ comp.			X
	.2	ϕ Single, mixture, or %	X		
	.3	ϕ Flow rate			X
	.5	± or ϕ Backing flow			X
	.9	− Backing or ϕ comp.	X		
	.10	− Trail or ϕ comp.	X		
QW-409 Electrical Characteristics	.1	> Heat input		X	
	.2	ϕ Transfer mode	X		
	.4	ϕ Current or polarity		X	X
	.8	ϕ I & E range			X

Copyrighted material licensed to Fermi National Laboratory by Clarivate Analytics (US) LLC, subscriptions.techstreet.com, downloaded on 2020-09-23 17:45:20 +0000 by Fermi National Laboratory User.
No further reproduction or distribution is permitted.

Table QW-255
Welding Variables Procedure Specifications (WPS) — Gas Metal-Arc Welding (GMAW and FCAW) (Cont'd)

Paragraph		Brief of Variables	Essential	Supplementary Essential	Nonessential
QW-410 Technique	.1	ϕ String or weave			X
	.3	ϕ Orifice, cup, or nozzle size			X
	.5	ϕ Method cleaning			X
	.6	ϕ Method back gouge			X
	.7	ϕ Oscillation			X
	.8	ϕ Tube-work distance			X
	.9	ϕ Multiple to single pass per side		X	X
	.10	ϕ Single to multiple electrodes		X	X
	.15	ϕ Electrode spacing			X
	.25	ϕ Manual or automatic			X
	.26	± Peening			X
	.64	Use of thermal processes	X		

Legend:

+ Addition	> Increase or greater than	↑ Uphill	← Forehand	ϕ Change
− Deletion	< Decrease or less than	↓ Downhill	→ Backhand	

Copyrighted material licensed to Fermi National Laboratory by Clarivate Analytics (US) LLC, subscriptions.techstreet.com, downloaded on 2020-09-23 17:45:20 +0000 by Fermi National Laboratory User.
No further reproduction or distribution is permitted.

Table QW-255.1
Welding Variables Procedure Specifications (WPS) — Gas Metal-Arc Welding (GMAW and FCAW)

Special Process Variables				
		Essential Variables		
Paragraph		Hard-Facing Overlay (HFO) (QW-216)	Corrosion-Resistant Overlay (CRO) (QW-214)	Nonessential Variables for HFO and CRO
QW-402 Joints	.16	< Finished *t*	< Finished *t*	
QW-403 Base Metals	.20	ϕ P-Number	ϕ P-Number	
	.23	ϕ *T* Qualified	ϕ *T* Qualified	
QW-404 Filler Metals	.6			ϕ Nominal size of electrode
	.12	ϕ Classification		
	.23	ϕ Filler metal product form	ϕ Filler metal product form	
	.24	± or ϕ > 10% in supplemental filler metal	± or ϕ > 10% in supplemental filler metal	
	.27	ϕ Alloy elements		
	.37		ϕ A-Number	
QW-405 Positions	.4	+ Position	+ Position	
QW-406 Preheat	.4	Dec. > 100°F (55°C) preheat > Interpass	Dec. > 100°F (55°C) preheat > Interpass	
QW-407 PWHT	.6	ϕ PWHT		
	.9		ϕ PWHT	
QW-408 Gas	.2	ϕ Single, mixture, or %	ϕ Single, mixture, or %	
	.3			ϕ Flow rate
QW-409 Electrical Characteristics	.4	ϕ Current or polarity	ϕ Current or polarity	
	.8			ϕ I & E range
	.26	1st layer — Heat input > 10%	1st layer — Heat input > 10%	
QW-410 Technique	.1			ϕ String or weave
	.3			ϕ Orifice, cup, or nozzle size
	.5			ϕ Method of cleaning
	.7			ϕ Oscillation
	.8			ϕ Tube to work distance
	.25			ϕ Manual or automatic
	.26			± Peening
	.38	ϕ Multiple to single layer	ϕ Multiple to single layer	
	.50	ϕ No. of electrodes	ϕ No. of electrodes	

Legend:

+ Addition	> Increase or greater than	↑ Uphill	← Forehand	ϕ Change
− Deletion	< Decrease or less than	↓ Downhill	→ Backhand	

Copyrighted material licensed to Fermi National Laboratory by Clarivate Analytics (US) LLC, subscriptions.techstreet.com, downloaded on 2020-09-23 17:45:20 +0000 by Fermi National Laboratory User.
No further reproduction or distribution is permitted.

Table QW-256 (19)
Welding Variables Procedure Specifications (WPS) — Gas Tungsten-Arc Welding (GTAW)

Paragraph		Brief of Variables	Essential	Supplementary Essential	Nonessential
QW-402 Joints	.1	ϕ Groove design			X
	.5	+ Backing			X
	.10	ϕ Root spacing			X
	.11	± Retainers			X
QW-403 Base Metals	.5	ϕ Group Number		X	
	.6	*T* Limits		X	
	.8	*T* Qualified	X		
	.11	ϕ P-No. qualified	X		
QW-404 Filler Metals	.3	ϕ Size			X
	.4	ϕ F-Number	X		
	.5	ϕ A-Number	X		
	.12	ϕ Classification		X	
	.14	± Filler	X		
	.22	± Consum. insert			X
	.23	ϕ Filler metal product form	X		
	.30	ϕ *t*	X		
	.33	ϕ Classification			X
	.50	± Flux			X
QW-405 Positions	.1	+ Position			X
	.3	ϕ ↑↓ Vertical welding			X
QW-406 Preheat	.1	Decrease > 100°F (55°C)	X		
	.3	Increase > 100°F (55°C) (IP)		X	
QW-407 PWHT	.1	ϕ PWHT	X		
	.2	ϕ PWHT (T &T range)		X	
QW-408 Gas	.1	± Trail or ϕ comp.			X
	.2	ϕ Single, mixture, or %	X		
	.3	ϕ Flow rate			X
	.5	± or ϕ Backing flow			X
	.9	− Backing or ϕ comp.	X		
	.10	− Trail or ϕ comp.	X		
QW-409 Electrical Characteristics	.1	> Heat input		X	
	.3	± Pulsing I			X
	.4	ϕ Current or polarity		X	X
	.8	ϕ I & E range			X
	.12	ϕ Tungsten electrode			X

Copyrighted material licensed to Fermi National Laboratory by Clarivate Analytics (US) LLC, subscriptions.techstreet.com, downloaded on 2020-09-23 17:45:20 +0000 by Fermi National Laboratory User.
No further reproduction or distribution is permitted.

Table QW-256
Welding Variables Procedure Specifications (WPS) — Gas Tungsten-Arc Welding (GTAW) (Cont'd)

Paragraph		Brief of Variables	Essential	Supplementary Essential	Nonessential
QW-410 Technique	.1	ϕ String or weave			X
	.3	ϕ Orifice, cup, or nozzle size			X
	.5	ϕ Method cleaning			X
	.6	ϕ Method back gouge			X
	.7	ϕ Oscillation			X
	.9	ϕ Multi to single pass per side		X	X
	.10	ϕ Single to multi electrodes		X	X
	.11	ϕ Closed to out chamber	X		
	.15	ϕ Electrode spacing			X
	.25	ϕ Manual or automatic			X
	.26	± Peening			X
	.64	Use of thermal processes	X		

Legend:

+ Addition	> Increase or greater than	↑ Uphill	← Forehand	ϕ Change
− Deletion	< Decrease or less than	↓ Downhill	→ Backhand	

Copyrighted material licensed to Fermi National Laboratory by Clarivate Analytics (US) LLC, subscriptions.techstreet.com, downloaded on 2020-09-23 17:45:20 +0000 by Fermi National Laboratory User.
No further reproduction or distribution is permitted.

Table QW-256.1
Welding Variables Procedure Specifications (WPS) — Gas Tungsten-Arc Welding (GTAW)

Special Process Variables				
		Essential Variables		
Paragraph		Hard-Facing Overlay (HFO) (QW-216)	Corrosion-Resistant Overlay (CRO) (QW-214)	Nonessential Variables for HFO and CRO
QW-402 Joints	.16	< Finished *t*	< Finished *t*	
QW-403 Base Metals	.20	ϕ P-Number	ϕ P-Number	
	.23	ϕ *T* Qualified	ϕ *T* Qualified	
QW-404 Filler Metals	.3			ϕ Wire size
	.12	ϕ Classification		
	.14	± Filler metal	± Filler metal	
	.23	ϕ Filler metal product form	ϕ Filler metal product form	
	.37		ϕ A-Number	
QW-405 Positions	.4	+ Position	+ Position	
QW-406 Preheat	.4	Dec. > 100°F (55°C) preheat > Interpass	Dec. > 100°F (55°C) preheat > Interpass	
QW-407 PWHT	.6	ϕ PWHT		
	.9		ϕ PWHT	
QW-408 Gas	.2	ϕ Single, mixture, or %	ϕ Single, mixture, or %	
	.3			ϕ Flow rate
QW-409 Electrical Characteristics	.4	ϕ Current or polarity	ϕ Current or polarity	
	.8			ϕ I & E range
	.12			ϕ Tungsten electrode
	.26	1st layer — Heat input > 10%	1st layer — Heat input > 10%	
QW-410 Technique	.1			ϕ String or weave
	.3			ϕ Orifice, cup, or nozzle size
	.5			ϕ Method of cleaning
	.7			ϕ Oscillation
	.15			ϕ Electrode spacing
	.25			ϕ Manual or automatic
	.26			± Peening
	.38	ϕ Multiple to single layer	ϕ Multiple to single layer	
	.50	ϕ No. of electrodes	ϕ No. of electrodes	
	.52			ϕ Filler metal delivery

Legend:

+ Addition	> Increase or greater than	↑ Uphill	← Forehand	ϕ Change
− Deletion	< Decrease or less than	↓ Downhill	→ Backhand	

Copyrighted material licensed to Fermi National Laboratory by Clarivate Analytics (US) LLC, subscriptions.techstreet.com, downloaded on 2020-09-23 17:45:20 +0000 by Fermi National Laboratory User.
No further reproduction or distribution is permitted.

(19)

Table QW-257
Welding Variables Procedure Specifications (WPS) — Plasma-Arc Welding (PAW)

Paragraph		Brief of Variables	Essential	Supplementary Essential	Nonessential
QW-402 Joints	.1	ϕ Groove design		X	
	.5	+ Backing			X
	.10	ϕ Root spacing			X
	.11	± Retainers			X
QW-403 Base Metals	.5	ϕ Group Number		X	
	.6	*T* Limits		X	
	.8	ϕ *T* Qualified	X		
	.12	ϕ P-Number or melt-in	X		
QW-404 Filler Metals	.3	ϕ Size			X
	.4	ϕ F-Number	X		
	.5	ϕ A-Number	X		
	.12	ϕ Classification		X	
	.14	± Filler metal	X		
	.22	± Consum. insert			X
	.23	ϕ Filler metal product form	X		
	.27	ϕ Alloy elements	X		
	.30	ϕ *t*	X		
	.33	ϕ Classification			X
QW-405 Positions	.1	+ Position			X
	.3	ϕ ↑↓ Vertical welding			X
QW-406 Preheat	.1	Decrease > 100°F (55°C)	X		
	.3	Increase > 100°F (55°C) (IP)		X	
QW-407 PWHT	.1	ϕ PWHT	X		
	.2	ϕ PWHT (T & T range)		X	
QW-408 Gas	.1	± Trail or ϕ comp.			X
	.4	ϕ Composition	X		
	.5	± Or ϕ backing flow			X
	.9	− Backing or ϕ comp.	X		
	.10	− Trail or ϕ comp.	X		
	.21	ϕ Flow rate			X
QW-409 Electrical Characteristics	.1	> Heat input		X	
	.4	ϕ Current or polarity		X	X
	.8	ϕ I & E range			X
	.12	ϕ Tungsten electrode			X

Copyrighted material licensed to Fermi National Laboratory by Clarivate Analytics (US) LLC, subscriptions.techstreet.com, downloaded on 2020-09-23 17:45:20 +0000 by Fermi National Laboratory User.
No further reproduction or distribution is permitted.

Table QW-257
Welding Variables Procedure Specifications (WPS) — Plasma-Arc Welding (PAW) (Cont'd)

Paragraph		Brief of Variables	Essential	Supplementary Essential	Nonessential
QW-410 Technique	.1	ϕ String or weave			X
	.3	ϕ Orifice, cup, or nozzle size			X
	.5	ϕ Method cleaning			X
	.6	ϕ Method back gouge			X
	.7	ϕ Oscillation			X
	.9	ϕ Multiple to single pass per side		X	X
	.10	ϕ Single to multiple electrodes		X	X
	.11	ϕ Closed to out chamber	X		
	.12	ϕ Melt-in to keyhole		X	
	.15	ϕ Electrode spacing			X
	.26	± Peening			X
	.64	Use of thermal processes	X		

Legend:

+ Addition	> Increase or greater than	↑ Uphill	← Forehand	ϕ Change
− Deletion	< Decrease or less than	↓ Downhill	→ Backhand	

Copyrighted material licensed to Fermi National Laboratory by Clarivate Analytics (US) LLC, subscriptions.techstreet.com, downloaded on 2020-09-23 17:45:20 +0000 by Fermi National Laboratory User.
No further reproduction or distribution is permitted.

Table QW-257.1
Welding Variables Procedure Specifications (WPS) — Plasma-Arc Welding (PAW)

Special Process Variables					
		Essential Variables			Nonessential Variables for HFO, CRO, and HFSF
Paragraph		Hard-Facing Overlay (HFO) (QW-216)	Corrosion-Resistant Overlay (CRO) (QW-214)	Hard-Facing Spray Fuse (HFSF) (QW-216)	
QW-402 Joints	.16	< Finished t	< Finished t		
	.17			> Finished t	
QW-403 Base Metals	.20	ϕ P-Number	ϕ P-Number	ϕ P-Number	
	.23	ϕ T Qualified	ϕ T Qualified		
QW-404 Filler Metals	.12	ϕ Classification		ϕ Classification	
	.14	± Filler metal	± Filler metal		
	.23	ϕ Filler metal product form	ϕ Filler metal product form		
	.37		ϕ A-Number		
	.41	ϕ > 10% Powder feed rate	ϕ > 10% Powder feed rate		
	.42			ϕ > 5% Particle size	
	.43	ϕ Particle size	ϕ Particle size		
	.44	ϕ Powder type	ϕ Powder type		
	.46			ϕ Powder feed rate	
QW-405 Positions	.4	+ Position	+ Position	+ Position	
QW-406 Preheat	.4	Dec. > 100°F (55°C) preheat > Interpass	Dec. > 100°F (55°C) preheat > Interpass	Dec. > 100°F (55°C) preheat > Interpass	
	.5			ϕ Preheat maintenance	
QW-407 PWHT	.6	ϕ PWHT		ϕ PWHT	
	.7			ϕ PWHT after fusing	
	.9		ϕ PWHT		
QW-408 Gas	.1				± Trail or π comp.
	.16	ϕ > 5% Arc or metal feed gas	ϕ > 5% Arc or metal feed gas	ϕ > 5% Arc or metal feed gas	
	.17	ϕ Type or mixture	ϕ Type or mixture		
	.18	ϕ > 10% Mix. comp.	ϕ > 10% Mix. comp.		
	.19			ϕ Plasma or feed gas comp.	
	.20			ϕ Plasma gas flow-rate range	
QW-409 Electrical Characteristics	.4	ϕ Current or polarity	ϕ Current or polarity		
	.8				ϕ I & E range
	.12			ϕ Type or size of electrode	
	.23			ϕ > 10% I & E	
	.24	ϕ > 10% Filler wire watt.	ϕ > 10% Filler wire watt.		
	.25	ϕ > 10% I & E	ϕ > 10% I & E		

Copyrighted material licensed to Fermi National Laboratory by Clarivate Analytics (US) LLC, subscriptions.techstreet.com, downloaded on 2020-09-23 17:45:20 +0000 by Fermi National Laboratory User.
No further reproduction or distribution is permitted.

Table QW-257.1
Welding Variables Procedure Specifications (WPS) — Plasma-Arc Welding (PAW) (Cont'd)

Special Process Variables					
		Essential Variables			Nonessential Variables for HFO, CRO, and HFSF
Paragraph		Hard-Facing Overlay (HFO) (QW-216)	Corrosion-Resistant Overlay (CRO) (QW-214)	Hard-Facing Spray Fuse (HFSF) (QW-216)	
QW-410 Technique	.1				ϕ String or weave (HFO and CRO only)
	.3				ϕ Orifice, cup, or nozzle size
	.5				ϕ Method of cleaning
	.7				ϕ Oscillation
	.25				ϕ Manual or automatic
	.26				± Peening
	.38	ϕ Multiple to single layer	ϕ Multiple to single layer	ϕ Multiple to single layer	
	.41	ϕ > 15% Travel speed	ϕ > 15% Travel speed		
	.43			ϕ > 10% Travel speed range	
	.44			ϕ > 15% Torch to workplace	
	.45			ϕ Surface preparation	
	.46			ϕ Spray torch	
	.47			ϕ > 10% Fusing temp. or method	
	.48	ϕ Transfer mode	ϕ Transfer mode	ϕ Transfer mode	
	.49	ϕ Torch orifice diameter	ϕ Torch orifice diameter		
	.52	ϕ Filler metal del.	ϕ Filler metal del.		

Legend:

+ Addition	> Increase or greater than	↑ Uphill	← Forehand	ϕ Change
− Deletion	< Decrease or less than	↓ Downhill	→ Backhand	

Copyrighted material licensed to Fermi National Laboratory by Clarivate Analytics (US) LLC, subscriptions.techstreet.com, downloaded on 2020-09-23 17:45:20 +0000 by Fermi National Laboratory User.
No further reproduction or distribution is permitted.

Table QW-258
Welding Variables Procedure Specifications (WPS) — Electroslag Welding (ESW)

Paragraph		Brief of Variables	Essential	Supplementary Essential	Nonessential
QW-402 Joints	.1	ϕ Groove design			X
	.10	ϕ Root spacing			X
	.11	± Retainers	X		
QW-403 Base Metals	.1	ϕ P-Number	X		
	.4	ϕ Group Number		X	
	.9	t Pass > ½ in. (13 mm)	X		
QW-404 Filler Metals	.4	ϕ F-Number	X		
	.5	ϕ A-Number	X		
	.6	ϕ Diameter			X
	.12	ϕ Classification		X	
	.17	ϕ Flux type or comp.	X		
	.18	ϕ Wire to plate	X		
	.19	ϕ Consum. guide	X		
	.33	ϕ Classification			X
QW-407 PWHT	.1	ϕ PWHT	X		
	.2	ϕ PWHT (T & T range)		X	
QW-409 Electrical Characteristics	.5	ϕ ± 15% I & E range	X		
QW-410 Technique	.5	ϕ Method cleaning			X
	.7	ϕ Oscillation	X		
	.10	ϕ Single to multiple electrodes	X		
	.15	ϕ Electrode spacing			X
	.26	± Peening			X
	.64	Use of thermal processes	X		

Legend:

+ Addition	> Increase or greater than	↑ Uphill	← Forehand	ϕ Change
− Deletion	< Decrease or less than	↓ Downhill	→ Backhand	

Copyrighted material licensed to Fermi National Laboratory by Clarivate Analytics (US) LLC, subscriptions.techstreet.com, downloaded on 2020-09-23 17:45:20 +0000 by Fermi National Laboratory User.
No further reproduction or distribution is permitted.

Table QW-258.1
Welding Variables Procedure Specifications (WPS) — Electroslag Welding (ESW)

Special Process Variables				
		Essential Variables		
Paragraph		Hard-Facing Overlay (HFO) (QW-216)	Corrosion-Resistant Overlay (CRO) (QW-214)	Nonessential Variables for HFO and CRO
QW-402 Joints	.16	< Finished *t*	< Finished *t*	
QW-403 Base Metals	.20	ϕ P-Number	ϕ P-Number	
	.23	ϕ *T* Qualified	ϕ *T* Qualified	
QW-404 Filler Metals	.6			ϕ Nominal size of electrode
	.12	ϕ Classification		
	.24	± or ϕ > 10% in supplemental filler metal	± or ϕ > 10% in supplemental filler metal	
	.37		ϕ A-Number	
	.39	ϕ Nominal flux comp.	ϕ Nominal flux comp.	
	.57	> Strip thickness or width	> Strip thickness or width	
QW-406 Preheat	.4	Dec. > 100°F (55°C) preheat > Interpass	Dec. > 100°F (55°C) preheat > Interpass	
QW-407 PWHT	.6	ϕ PWHT		
	.9		ϕ PWHT	
QW-409 Electrical Characteristics	.4	ϕ Current or polarity	ϕ Current or polarity	
	.8			ϕ I & E range
	.26	1st layer — Heat input > 10%	1st layer — Heat input > 10%	
QW-410 Technique	.5			ϕ Method of cleaning
	.7			ϕ Oscillation (CRO only)
	.38	ϕ Multiple to single layer	ϕ Multiple to single layer	
	.40	– Supplemental device	– Supplemental device	
	.50	ϕ No. of electrodes	ϕ No. of electrodes	

Legend:

+ Addition	> Increase or greater than	↑ Uphill	← Forehand	ϕ Change
– Deletion	< Decrease or less than	↓ Downhill	→ Backhand	

Copyrighted material licensed to Fermi National Laboratory by Clarivate Analytics (US) LLC, subscriptions.techstreet.com, downloaded on 2020-09-23 17:45:20 +0000 by Fermi National Laboratory User.
No further reproduction or distribution is permitted.

Table QW-259
Welding Variables Procedure Specifications (WPS) — Electrogas Welding (EGW)

Paragraph		Brief of Variables	Essential	Supplementary Essential	Nonessential
QW-402 Joints	.1	ϕ Groove design			X
	.10	ϕ Root spacing			X
	.11	± Retainers	X		
QW-403 Base Metals	.1	ϕ P-Number	X		
	.5	ϕ Group Number		X	
	.6	T Limits		X	
	.8	ϕ T Qualified	X		
	.9	t Pass > $^1/_2$ in. (13 mm)	X		
QW-404 Filler Metals	.4	ϕ F-Number	X		
	.5	ϕ A-Number	X		
	.6	ϕ Diameter			X
	.12	ϕ Classification		X	
	.23	ϕ Filler metal product form	X		
	.33	ϕ Classification			X
QW-406 Preheat	.1	Decrease > 100°F (55°C)			X
QW-407 PWHT	.1	ϕ PWHT	X		
	.2	ϕ PWHT (T & T range)		X	
QW-408 Gas	.2	ϕ Single, mixture, or %	X		
	.3	ϕ Flow rate			X
QW-409 Electrical Characteristics	.1	> Heat input		X	
	.4	ϕ Current or polarity		X	X
	.8	ϕ I & E range			X
QW-410 Technique	.5	ϕ Method cleaning			X
	.7	ϕ Oscillation			X
	.8	ϕ Tube-work distance			X
	.9	ϕ Multiple to single pass per side		X	X
	.10	ϕ Single to multiple electrodes	X		
	.15	ϕ Electrode spacing			X
	.26	± Peening			X
	.64	Use of thermal processes	X		

Legend:

+ Addition	> Increase or greater than	↑ Uphill	← Forehand	ϕ Change
− Deletion	< Decrease or less than	↓ Downhill	→ Backhand	

GENERAL NOTE: Automated vertical gas metal-arc welding for vertical position only.

Copyrighted material licensed to Fermi National Laboratory by Clarivate Analytics (US) LLC, subscriptions.techstreet.com, downloaded on 2020-09-23 17:45:20 +0000 by Fermi National Laboratory User.
No further reproduction or distribution is permitted.

Table QW-260
Welding Variables Procedure Specifications (WPS) — Electron Beam Welding (EBW)

Paragraph		Brief of Variables	Essential	Supplementary Essential	Nonessential
QW-402 Joints	.1	ϕ Groove design	X		
	.2	− Backing	X		
	.6	> Fit-up gap	X		
QW-403 Base Metals	.1	ϕ P-Number	X		
	.3	ϕ Penetration	X		
	.15	ϕ P-Number	X		
QW-404 Filler Metals	.1	ϕ Cross section or speed	X		
	.2	< t or ϕ comp.	X		
	.8	± or ϕ Chem. comp.	X		
	.14	± Filler	X		
	.20	ϕ Method of addition	X		
	.21	ϕ Analysis	X		
	.33	ϕ Classification			X
QW-406 Preheat	.1	Decrease > 100°F (55°C)	X		
QW-407 PWHT	.1	ϕ PWHT	X		
QW-408 Gas	.6	ϕ Environment	X		
QW-409 Electrical Characteristics	.6	ϕ I, E, speed, distance, osc.	X		
	.7	ϕ Pulsing frequency	X		
QW-410 Technique	.5	ϕ Method cleaning			X
	.7	ϕ Oscillation	X		
	.14	ϕ Angle of beam axis	X		
	.17	ϕ Type equip.	X		
	.18	> Pressure of vacuum	X		
	.19	ϕ Filament type, size, etc.	X		
	.20	+ Wash pass	X		
	.21	1 vs. 2 side welding	X		
	.64	Use of thermal processes	X		

Legend:

+ Addition
− Deletion
> Increase or greater than
< Decrease or less than
↑ Uphill
↓ Downhill
← Forehand
→ Backhand
ϕ Change

Copyrighted material licensed to Fermi National Laboratory by Clarivate Analytics (US) LLC, subscriptions.techstreet.com, downloaded on 2020-09-23 17:45:20 +0000 by Fermi National Laboratory User.
No further reproduction or distribution is permitted.

Table QW-261
Welding Variables Procedure Specifications (WPS) — Stud Welding

Paragraph		Brief of Variables	Essential	Supplementary Essential	Nonessential
QW-402 Joints	.8	ϕ Stud shape size	X		
	.9	− Flux or ferrule	X		
QW-403 Base Metal	.17	ϕ Base metal or stud metal P-No.	X		
QW-405 Positions	.1	+ Position	X		
QW-406 Preheat	.1	Decrease > 100°F (55°C)	X		
QW-407 PWHT	.1	ϕ PWHT	X		
QW-408 Gas	.2	ϕ Single, mixture, or %	X		
QW-409 Electrical Characteristics	.4	ϕ Current or polarity	X		
	.9	ϕ Arc timing	X		
	.10	ϕ Amperage	X		
	.11	ϕ Power source	X		
QW-410 Technique	.22	ϕ Gun model or lift	X		
	.64	Use of thermal processes	X		

Legend:

+ Addition
− Deletion
> Increase or greater than
< Decrease or less than
↑ Uphill
↓ Downhill
← Forehand
→ Backhand
ϕ Change

Copyrighted material licensed to Fermi National Laboratory by Clarivate Analytics (US) LLC, subscriptions.techstreet.com, downloaded on 2020-09-23 17:45:20 +0000 by Fermi National Laboratory User.
No further reproduction or distribution is permitted.

Table QW-262
Welding Variables Procedure Specifications (WPS) — Inertia and Continuous Drive Friction Welding

Paragraph		Brief of Variables	Essential	Supplementary Essential	Nonessential
QW-402 Joints	.12	ϕ ± 10 deg	X		
		ϕ Cross section > 10%	X		
		ϕ O.D. > ± 10%	X		
		ϕ Solid-to-tube	X		
QW-403 Base Metals	.19	ϕ Base metal	X		
QW-406 Preheat	.1	ϕ Decrease > 100°F (55°C)	X		
QW-407 PWHT	.1	ϕ PWHT	X		
QW-408 Gas	.6	ϕ Environment	X		
QW-410 Technique	.27	ϕ Spp. > ± 10%	X		
	.28	ϕ Load > ± 10%	X		
	.29	ϕ Energy > ± 10%	X		
	.30	ϕ Upset > ± 10%	X		
	.64	Use of thermal processes	X		

Legend:

+ Addition	> Increase or greater than	↑ Uphill	← Forehand	ϕ Change
− Deletion	< Decrease or less than	↓ Downhill	→ Backhand	

Copyrighted material licensed to Fermi National Laboratory by Clarivate Analytics (US) LLC, subscriptions.techstreet.com, downloaded on 2020-09-23 17:45:20 +0000 by Fermi National Laboratory User.
No further reproduction or distribution is permitted.

Table QW-263
Welding Variables Procedure Specifications (WPS) — Resistance Welding

Paragraph		Brief of Variables	Essential	Nonessential
QW-402 Joints	.13	ϕ Spot, projection, seam	X	
	.14	ϕ Overlap, spacing	X	
	.15	ϕ Projection, shape, size	X	
QW-403 Base Metals	.1	ϕ P-No.	X	
	.21	± Coating, plating	X	
	.22	± *T*	X	
QW-407 PWHT	.1	ϕ PWHT	X	
QW-408 Gas	.23	− Gases	X	
QW-409 Electrical	.13	ϕ RWMA class	X	
	.14	± ϕ Slope	X	
	.15	ϕ Pressure, current, time	X	
	.17	ϕ Power supply		X
	.18	Tip cleaning		X
QW-410 Technique	.31	ϕ Cleaning method	X	
	.32	ϕ Pressure, time	X	
	.33	ϕ Equipment	X	
	.34	ϕ Cooling medium		X
	.35	ϕ Throat		X
	.64	Use of thermal processes	X	

Legend:

+ Addition	> Increase or greater than	↑ Uphill	← Forehand	ϕ Change
− Deletion	< Decrease or less than	↓ Downhill	→ Backhand	

Copyrighted material licensed to Fermi National Laboratory by Clarivate Analytics (US) LLC, subscriptions.techstreet.com, downloaded on 2020-09-23 17:45:20 +0000 by Fermi National Laboratory User.
No further reproduction or distribution is permitted.

Table QW-264
Welding Variables Procedure Specifications (WPS) — Laser Beam Welding (LBW)

Paragraph		Brief of Variables	Essential	Supplementary Essential	Nonessential
QW-402 Joints	.2	± Backing	X		
	.6	> Fit-up gap	X		
	.18	ϕ Lap joint config.	X		
	.25	ϕ Lap to groove	X		
	.26	< Bevel angle > 5 deg	X		
QW-403 Base Metals	.1	ϕ P-Number	X		
	.3	ϕ Penetration	X		
QW-404 Filler Metals	.1	ϕ Cross section or speed	X		
	.2	< t or ϕ comp.	X		
	.4	ϕ F-No.	X		
	.5	ϕ A-No.	X		
	.8	± or ϕ chem. comp.	X		
	.14	± Filler metal	X		
	.20	ϕ Method of addition	X		
QW-406 Preheat	.1	Decrease > 100°F (55°C)	X		
QW-407 PWHT	.1	ϕ PWHT	X		
QW-408 Gas	.2	ϕ Single, mixture, or %	X		
	.6	ϕ Environment	X		
	.11	± Gases	X		
	.12	Decrease > 10% flow rate	X		
QW-409 Electrical Characteristics	.19	ϕ Pulse	X		
	.20	ϕ Mode, energy	X		
	.21	Decrease > 10% power	X		
QW-410 Technique	.5	ϕ Method cleaning			X
	.7	ϕ Oscillation	X		
	.14	ϕ Angle of beam axis	X		
	.20	+ Wash pass	X		
	.21	1 vs. 2 side welding	X		
	.37	ϕ Single to multiple pass	X		
	.64	Use of thermal processes	X		
	.66	ϕ Travel, Beam factors	X		
	.67	ϕ Optical technique	X		
	.68	ϕ Type of equipment	X		
	.77	ϕ Wavelength	X		
	.80	ϕ Spot size	X		

Legend:

+ Addition	> Increase or greater than	↑ Uphill	← Forehand	ϕ Change
− Deletion	< Decrease or less than	↓ Downhill	→ Backhand	

Copyrighted material licensed to Fermi National Laboratory by Clarivate Analytics (US) LLC, subscriptions.techstreet.com, downloaded on 2020-09-23 17:45:20 +0000 by Fermi National Laboratory User.
No further reproduction or distribution is permitted.

Table QW-264.1
Welding Variables Procedure Specifications (WPS) — Laser Beam Welding (LBW)

Special Process Variables				
		Essential Variables		
Paragraph		Hard-Facing Overlay (HFO) (QW-216)	Corrosion-Resistant Overlay (CRO) (QW-214)	Nonessential Variables for HFO and CRO
QW-402 Joints	.16	< Finished *t*	< Finished *t*	
QW-403 Base Metals	.20	ϕ P-Number	ϕ P-Number	
QW-404 Filler Metals	.12	ϕ Classification	ϕ Classification	
	.27	ϕ Alloy elements	ϕ Alloy elements	
	.44	ϕ Particle type	ϕ Particle type	
	.47	ϕ Filler or powder metal size	ϕ Filler or powder metal size	
	.48	ϕ Powder metal density	ϕ Powder metal density	
	.49	ϕ Filler metal powder feed rate	ϕ Filler metal powder feed rate	
QW-405 Positions	.1	+ Position	+ Position	
QW-406 Preheat	.4	Dec. > 100°F (55°C) preheat > Interpass	Dec. > 100°F (55°C) preheat > Interpass	
QW-407 PWHT	.6	ϕ PWHT		
	.9		ϕ PWHT	
QW-408 Gas	.2	ϕ Single, mixture, or %	ϕ Single, mixture, or %	
	.6	ϕ Environment	ϕ Environment	
	.11	± Gases	± Gases	
	.12	Decrease > 10% flow rate	Decrease > 10% flow rate	
QW-409 Electrical Characteristics	.19	ϕ Pulse	ϕ Pulse	
	.20	ϕ Mode, energy	ϕ Mode, energy	
	.21	Decrease > 10% power	Decrease > 10% power	
QW-410 Technique	.5			ϕ Method of cleaning
	.7	ϕ Oscillation	ϕ Oscillation	
	.14	ϕ Angle of beam axis	ϕ Angle of beam axis	
	.17	ϕ Type or model of equipment	ϕ Type or model of equipment	
	.38	ϕ Multiple to single layer	ϕ Multiple to single layer	
	.45	ϕ Method of surface prep.	ϕ Method of surface prep.	
	.52	ϕ Filler metal delivery	ϕ Filler metal delivery	
	.53	ϕ Overlap, spacing	ϕ Overlap, spacing	
	.77	ϕ Wavelength	ϕ Wavelength	
	.80	ϕ Spot size	ϕ Spot size	

Legend:

+ Addition	> Increase or greater than	↑ Uphill	← Forehand	ϕ Change
− Deletion	< Decrease or less than	↓ Downhill	→ Backhand	

Copyrighted material licensed to Fermi National Laboratory by Clarivate Analytics (US) LLC, subscriptions.techstreet.com, downloaded on 2020-09-23 17:45:20 +0000 by Fermi National Laboratory User.
No further reproduction or distribution is permitted.

Table QW-264.2 (19)
Welding Variables Procedure Specifications (WPS) — Low-Power Density Laser Beam Welding (LLBW)

Paragraph		Brief of Variables	Essential	Supplementary Essential	Nonessential
QW-402 Joints	.1	ϕ Groove design			X
	.5	+ Backing			X
	.10	ϕ Root spacing			X
	.11	± Retainers			X
QW-403 Base Metals	.5	ϕ Group number		X	
	.6	*T* Limits		X	
	.8	*T* Qualified	X		
	.11	ϕ P-No. qualified	X		
QW-404 Filler Metals	.3	ϕ Size			X
	.4	ϕ F-Number	X		
	.5	ϕ A-Number	X		
	.12	ϕ Classification		X	
	.14	± Filler	X		
	.22	± Consum. insert			X
	.23	ϕ Filler metal product form	X		
	.30	ϕ *t*	X		
	.33	ϕ Classification			X
	.50	± Flux			X
QW-405 Positions	.1	+ Position			X
	.3	ϕ ↑↓ Vertical welding			X
QW-406 Preheat	.1	Decrease > 100°F (55°C)	X		
	.3	Increase > 100°F (55°C) (IP)		X	
QW-407 PWHT	.1	ϕ PWHT	X		
	.2	ϕ PWHT (T & T range)		X	
QW-408 Gas	.1	± Trail or ϕ comp.			X
	.2	ϕ Single, mixture, or %	X		
	.3	ϕ Flow rate			X
	.5	± or ϕ Backing flow			X
	.9	− Backing or ϕ comp.	X		
	.10	ϕ Shielding or trailing	X		
QW-409 Electrical Characteristics	.1	> Heat input		X	
	.19	ϕ Pulse	X		
	.20	ϕ Mode, energy	X		
	.21	Decrease > 10% power	X		

Copyrighted material licensed to Fermi National Laboratory by Clarivate Analytics (US) LLC, subscriptions.techstreet.com, downloaded on 2020-09-23 17:45:20 +0000 by Fermi National Laboratory User.
No further reproduction or distribution is permitted.

Table QW-264.2
Welding Variables Procedure Specifications (WPS) — Low-Power Density Laser Beam Welding (LLBW) (Cont'd)

Paragraph		Brief of Variables	Essential	Supplementary Essential	Nonessential
QW-410 Technique	.3	ϕ Orifice, cup, or nozzle size			X
	.5	ϕ Method cleaning			X
	.6	ϕ Method back gouge			X
	.7	ϕ Oscillation			X
	.9	ϕ Multi to single pass per side		X	X
	.11	ϕ Closed to out chamber	X		
	.26	± Peening			X
	.64	Use of thermal processes	X		
	.66	ϕ Travel, Beam factors	X		
	.67	ϕ Optical technique	X		
	.68	ϕ Type of equipment	X		
	.77	ϕ Wavelength	X		
	.80	ϕ Spot size	X		

Legend:

+ Addition	> Increase or greater than	↑ Uphill	← Forehand	ϕ Change
− Deletion	< Decrease or less than	↓ Downhill	→ Backhand	

Copyrighted material licensed to Fermi National Laboratory by Clarivate Analytics (US) LLC, subscriptions.techstreet.com, downloaded on 2020-09-23 17:45:20 +0000 by Fermi National Laboratory User.
No further reproduction or distribution is permitted.

Table QW-265
Welding Variables Procedure Specifications (WPS) — Flash Welding

Paragraph		Brief of Variables	Essential	Supplementary Essential	Nonessential
QW-402 Joints	.19	ϕ Diameter or thickness	X		
	.20	ϕ Joint configuration	X		
	.21	ϕ Method or equip. used to minimize ID flash	X		
	.22	ϕ End preparation method	X		
QW-403 Base Metals	.24	ϕ Spec., type, or grade	X		
QW-406 Preheat	.7	ϕ > 10% Amperage or number of preheat cycles, or method, or > 25°F (15°C) temperature	X		
QW-407 PWHT	.8	ϕ PWHT, PWHT cycles, or separate PWHT time or temperature	X		
QW-408 Gas	.22	ϕ Shielding gas composition, pressure, or purge time	X		
QW-409 Electrical Characteristics	.27	ϕ > 10% Flashing time	X		
	.28	ϕ > 10% Upset current time	X		
QW-410 Technique	.17	ϕ Type or model of equipment	X		
	.54	ϕ > 10% Upset length or force	X		
	.55	ϕ > 10% Distance between clamping dies or preparation of clamping area	X		
	.56	ϕ Clamping force	X		
	.57	ϕ 10% Forward or reverse speed	X		
	.64	Use of thermal processes	X		

Legend:

+ Addition	> Increase or greater than	↑ Uphill	← Forehand	ϕ Change
− Deletion	< Decrease or less than	↓ Downhill	→ Backhand	

Copyrighted material licensed to Fermi National Laboratory by Clarivate Analytics (US) LLC, subscriptions.techstreet.com, downloaded on 2020-09-23 17:45:20 +0000 by Fermi National Laboratory User.
No further reproduction or distribution is permitted.

Table QW-266
Welding Variables Procedure Specifications (WPS) — Diffusion Welding (DFW)

Paragraph		Brief of Variables	Essential	Supplementary Essential	Nonessential
QW-403 Base Metals	.28	Base metal grade	X		
	.29	ϕ Surface finish	X		
QW-404 Filler Metal	.53	± Filler metal and composition	X		
QW-407 PWHT	.10	± PWHT temperature, time, cooling rate	X		
QW-408 Gas	.25	ϕ Furnace Atmosphere	X		
QW-410 Technique	.70	ϕ Preassembly Cleaning	X		
	.71	< Block Compression	X		
	.72	< Welding time or temperature	X		

Legend:

+ Addition	> Increase or greater than	↑ Uphill	← Forehand	ϕ Change
− Deletion	< Decrease or less than	↓ Downhill	→ Backhand	

Copyrighted material licensed to Fermi National Laboratory by Clarivate Analytics (US) LLC, subscriptions.techstreet.com, downloaded on 2020-09-23 17:45:20 +0000 by Fermi National Laboratory User.
No further reproduction or distribution is permitted.

Table QW-267
Welding Variables Procedure Specifications — Friction Stir Welding (FSW)

Paragraph		Brief of Variables	Essential	Supplementary Essential	Nonessential
QW-402 Joints	.27	ϕ Fixed backing	X		
	.28	ϕ Joint design	X		
	.29	ϕ Joint spacing > 10%	X		
QW-403 Base Metals	.19	ϕ Type or grade	X		
	.30	ϕ T qualified > 20%	X		
QW-404 Filler Metals	.14	± Filler metal	X		
	.55	> Thickness or width of preplaced filler metal	X		
	.56	ϕ Type/grade	X		
QW-407 PWHT	.1	ϕ PWHT	X		
QW-408 Gas	.26	ϕ Shielding gas	X		
QW-410 Technique	.21	1-side vs. 2-side welding	X		
	.73	ϕ Joint restraint	X		
	.74	ϕ Control method	X		
	.75	ϕ Tool design	X		
	.76	ϕ Tool operation	X		

Legend:

+ Addition	> Increase or greater than	↑ Uphill	← Forehand	ϕ Change
− Deletion	< Decrease or less than	↓ Downhill	→ Backhand	

Copyrighted material licensed to Fermi National Laboratory by Clarivate Analytics (US) LLC, subscriptions.techstreet.com, downloaded on 2020-09-23 17:45:20 +0000 by Fermi National Laboratory User.
No further reproduction or distribution is permitted.

QW-283 WELDS WITH BUTTERING

QW-283.1 Scope. This paragraph only applies when the essential variables for the buttering process are different than the essential variables for the process used for subsequent completion of the joint. Common examples are

(a) the buttered member is heat treated and the completed weld is not heat treated after welding

(b) the filler metal used for buttering has a different F-Number from that used for the subsequent completion of the weld

QW-283.2 Tests Required. The procedure shall be qualified by buttering the test coupon (including heat treating of the buttered member when this will be done in production welding) and then making the subsequent weld joining the members. The variables for the buttering and for the subsequent weld shall be in accordance with QW-250, except that QW-409.1 shall be an essential variable for the welding process(es) used to complete the weld when the minimum buttering thickness is less than $^{3}/_{16}$ in. (5 mm). Mechanical testing of the completed weldment shall be in accordance with QW-202.2(a).

If the buttering is done with filler metal of the same composition as the filler metal used to complete the weld, one weld test coupon may be used to qualify the dissimilar metal joint by welding the first member directly to the second member in accordance with Section IX.

QW-283.3 Buttering Thickness. The thickness of buttering which shall remain on the production buttered member after all machining and grinding is completed and before subsequent completion of the joint shall be required by the WPS. When this thickness is less than $^{3}/_{16}$ in. (5 mm), the thickness of buttering on the test coupon shall be measured before the buttered member is welded to the second member. This thickness shall become the minimum qualified thickness of buttering.

QW-283.4 Qualification Alternative. When an essential variable is changed in the portion of the weld to be made after buttering or when a different organization is performing the portion of the weld to be made after buttering, a new qualification shall be performed in accordance with one of the following methods:

(a) Qualify in accordance with QW-283.2 and QW-283.3. When the original qualification buttering thickness is less than $^{3}/_{16}$ in. (5 mm), the buttering thickness shall not be greater, nor the heat input higher than was used on the original qualification.

(b) When the original qualification buttering thickness is $^{3}/_{16}$ in. (5 mm) or greater, qualify the portion of the weld to be made after buttering using any P-Number material that nominally matches the chemical analysis of the buttering weld metal for the buttered base metal of the test coupon.

QW-284 RESISTANCE WELDING MACHINE QUALIFICATION

Each resistance welding machine shall be tested to determine its ability to make welds consistently and reproducibly. A machine shall be requalified whenever it is rebuilt, moved to a new location requiring a change in power supply, when the power supply is changed, or any other significant change is made to the equipment. Spot and projection welding machine qualification testing shall consist of making a set of 100 consecutive welds. Every fifth of these welds shall be subjected to mechanical shear tests. Five welds, which shall include one of the first five and one of the last five of the set shall be metallographically examined. Seam welding machine qualification testing shall be the same as procedure qualification testing required per QW-286. Maintenance or adjustment of the welding machine shall not be permitted during welding of a set of test welds. Qualification testing on any P-No. 21 through P-No. 26 aluminum alloy shall qualify the machine for all materials. Qualification on P-No. 1 through P-No. 15F iron-base alloys and any P-No. 41 through P-No. 49 nickel-base alloys shall qualify the machine for all P-No. 1 through P-No. 15F and P-No. 41 through P-No. 49 metals. Qualification testing of the machine using base metals assigned to P-No. 51 through P-No. 53, P-No. 61, or P-No. 62 qualifies the welding machine to weld all base metals assigned to P-No. 51 through P-No. 53, P-No. 61, and P-No. 62. Testing and acceptance criteria shall be in accordance with QW-196.

QW-285 RESISTANCE SPOT AND PROJECTION WELD PROCEDURE QUALIFICATION

Procedure qualification testing for spot or projection welds shall be done following a Welding Procedure Specification, and it shall consist of making a set of ten consecutive welds. Five of these welds shall be subjected to mechanical shear tests and five to metallographic examination. Examination, testing, and acceptance criteria shall be in accordance with QW-196.

QW-286 RESISTANCE SEAM WELD PROCEDURE QUALIFICATION

QW-286.1 Test coupons described below shall consist of the same number of members, orientation, material grades or types, and thicknesses to be used in production welding.

QW-286.2 A test coupon as shown in Figure QW-462.7.1 shall be prepared by drilling a hole in the center of one of the outer coupon members. In the case of a test coupon containing more than two members, a hole shall be drilled in each member except for one of the outer members. A pipe nipple shall be welded or brazed to the outer member at the hole. The test coupon shall then be welded around the edges, sealing the space between the members as shown in Figure QW-462.7.1. The coupon

Copyrighted material licensed to Fermi National Laboratory by Clarivate Analytics (US) LLC, subscriptions.techstreet.com, downloaded on 2020-09-23 17:45:20 +0000 by Fermi National Laboratory User.
No further reproduction or distribution is permitted.

shall be pressurized hydrostatically until failure occurs. The procedure qualification is acceptable if failure occurs in the base metal.

QW-286.3 A test coupon at least 10 in. (250 mm) long shall be made per Figure QW-462.7.2. This test coupon shall be cut transverse to the length of the weld into ten pieces, each approximately 1 in. (25 mm) long. Four transverse weld specimens and four longitudinal weld cross section specimens shall be cut and prepared as detailed in Figure QW-462.7.2. The specimens shall be metallographically examined for compliance with the requirements of QW-196.

QW-287 VARIATION OF SETTINGS FOR ELECTRIC RESISTANCE WELDING

Settings for preheating cycles, electrode pressure, welding current, welding time cycle, or postheating cycles may be varied by ±5% from the values recorded on the PQR, or by ±10% when only one of the above settings is changed.

(19) QW-288 TUBE-TO-TUBESHEET QUALIFICATION ESSENTIAL VARIABLES

Essential variables applicable to tube-to-tubesheet welding procedure qualifications in accordance with QW-193 are listed in Table QW-288.1 for all welding processes except explosion welding and Table QW-288.2 for explosion welding. Essential procedure qualification variables applicable for each welding process listed in QW-250 shall also be observed in addition to the variables of QW-288. A change in the welding process used shall require requalification.

Table QW-288.1
Essential Variables for Procedure Qualification of Tube-to-Tubesheet Welding (All Welding Processes Except Explosion Welding)

Paragraph		Brief of Variables	
QW-402 Joints	.31	<	Ligament size
	.32	ϕ	Joint configuration
QW-403 Base Metals	.18	ϕ	P-Number or A-Number
	.32	ϕ	Tube thickness
	.33	<	Cladding thickness
	.34	ϕ	P-Number
QW-404 Filler Metals	.3	ϕ	Filler metal size
	.58	±	Preplaced filler metal
	.59	ϕ	A-number
QW-405 Positions	.3	ϕ	↑↓ Vertical welding
	.4	ϕ	Position
QW-406 Preheat	.1		Decrease >100°F (55°C)
	.3		Increase >100°F (55°C) (IP)

Table QW-288.1
Essential Variables for Procedure Qualification of Tube-to-Tubesheet Welding (All Welding Processes Except Explosion Welding) (Cont'd)

Paragraph		Brief of Variables	
QW-407 PWHT	.1	ϕ	PWHT
QW-409 Electrical Characteristics	.4	ϕ	Polarity
	.10	≥	Amperage
QW-410 Technique	.5	ϕ	Method of cleaning
	.37	ϕ	Single to multiple pass
	.81	+	Tube expansion

Legend:
+ Addition
− Deletion
> Amperage
< Decrease or less than
ϕ Change

GENERAL NOTE: QW-403.32, QW-404.59, QW-405.3, QW-406.1, QW-406.3, QW-409.4, QW-409.10, QW-410.25, and QW-410.37 do not apply to explosion welding.

Table QW-288.2
Essential Variables for Procedure Qualification of Tube-to-Tubesheet Welding (Explosion Welding)

Paragraph		Brief of Variables	
QW-403 Base Metals	.35	ϕ	Tube thickness
QW-410 Technique	.82	ϕ	Pressure application
	.83	ϕ	Explosive
	.84	ϕ	Distance charge to tubesheet
	.85	ϕ	Specified clearance

Legend:
ϕ Change

QW-289 LOW-ENERGY CAPACITOR DISCHARGE WELDING (19)

The following requirements apply to low-energy capacitor discharge welding:

(a) The energy output shall be limited to 125 W-sec.

(b) A Welding Procedure Specification describing the capacitor discharge equipment, the combination of materials to be joined, and the technique of application shall be prepared; qualification of the welding procedure is not required.

Copyrighted material licensed to Fermi National Laboratory by Clarivate Analytics (US) LLC, subscriptions.techstreet.com, downloaded on 2020-09-23 17:45:20 +0000 by Fermi National Laboratory User.
No further reproduction or distribution is permitted.

QW-290 TEMPER BEAD WELDING

When the applicable Code Section specifies the use of this paragraph for temper bead welding, QW-290.1 through QW-290.6 shall apply.

QW-290.1 Basic Qualification and Upgrading Existing WPSs. All WPSs for temper bead welding of groove and fillet weld shall be qualified for groove welding in accordance with the rules in QW-202 for qualification by groove welding or the rules in QW-283 for welds with buttering. WPSs for overlay shall be qualified in accordance with QW-214 or QW-216. Once these requirements and any additional qualification requirements of the applicable construction code have been satisfied, then it is necessary only to prepare an additional test coupon using the same procedure with the same essential and, if applicable, the supplementary essential variables with the coupon long enough to obtain the required temper bead test specimens. Qualification for groove welding, welding with buttering or cladding, and temper bead welding may also be done in a single test coupon.

When a procedure has been previously qualified to satisfy all requirements including temper bead welding, but one or more temper bead welding essential or supplementary essential variables are changed, then it is necessary only to prepare an additional test coupon using the same procedure with the same essential and, if applicable, supplementary essential variables and new temper bead welding essential variable(s) with the coupon long enough to obtain the required test specimens.

QW-290.2 Welding Process Restrictions. Temper bead welding is limited to SMAW, GTAW, SAW, GMAW (including FCAW), LLBW, and PAW. Manual and semiautomatic GTAW and PAW are prohibited, except for the root pass of groove welds made from one side and as described for making repairs to temper bead welds in QW-290.6. The essential variables listed in Table QW-290.4 apply in addition to the variables applicable for the process(es) qualified as given in QW-250. When toughness testing is the basis for acceptance, the supplementary essential variables of QW-250 applicable to the process being qualified shall apply. When these variables conflict with or provide more stringent limitations than those of QW-250, these variables shall govern.

QW-290.3 Variables for Temper Bead Welding Qualifications. Table QW-290.4 lists the additional essential, supplementary essential, and nonessential variables that apply when temper bead qualification is required. Essential variables column A shall apply when the applicable Construction Code or Design Specification specifies hardness criteria for temper bead acceptance criteria. Column B shall apply when the applicable Construction Code or Design Specification specifies toughness testing for temper bead acceptance criteria. Column C shall apply when the applicable Construction Code or Design Specification specifies neither hardness nor toughness test criteria. The column “Nonessential Variables” applies in all cases.

Copyrighted material licensed to Fermi National Laboratory by Clarivate Analytics (US) LLC, subscriptions.techstreet.com, downloaded on 2020-09-23 17:45:20 +0000 by Fermi National Laboratory User.
No further reproduction or distribution is permitted.

Table QW-290.4
Welding Variables for Temper Bead Procedure Qualification

Paragraph		Brief of Variables	Essential Variables [Note (1)] A	B	C	Nonessential Variables
QW-402	.23	+ Fluid backing	X			
	.24	+ Fluid backing		X	X	
QW-403	.25	ϕ P-No. or Gr. No.		X	X	
	.26	> Carbon equivalent	X			
	.27	> T	X		X	
QW-404	.51	Storage				X
	.52	Diffusible hydrogen	X	X	X	
QW-406	.9	< Preheat temperature	X			
	.10	Preheat soak time				X
	.11	Postweld bakeout				X
QW-408	.24	Gas moisture				X
QW-409	.29	ϕ Heat input ratio	X	X	X	
QW-410	.10	ϕ Single to multiple electrode	X	X	X	
	.58	– Surface temper beads	X	X	X	
	.59	ϕ Type of welding	X	X	X	
	.60	+ Thermal preparation	X	X	X	
	.61	Surface bead placement	X	X	X	
	.62	Surface bead removal method				X
	.63	Bead overlap	X	X	X	
	.65	± Grinding	X	X	X	

Legend:

+ Addition > Increase or greater than ϕ Change
– Deletion < Decrease or less than

NOTE:
(1) Construction code or design specification requirements for Essential Variable columns:
A = where maximum hardness is specified
B = where toughness testing is specified
C = where maximum hardness or toughness testing is not specified

Copyrighted material licensed to Fermi National Laboratory by Clarivate Analytics (US) LLC, subscriptions.techstreet.com, downloaded on 2020-09-23 17:45:20 +0000 by Fermi National Laboratory User.
No further reproduction or distribution is permitted.

Copyrighted material licensed to Fermi National Laboratory by Clarivate Analytics (US) LLC, subscriptions.techstreet.com, downloaded on 2020-09-23 17:45:20 +0000 by Fermi National Laboratory User.
No further reproduction or distribution is permitted.

QW-290.5 Test Coupon Preparation and Testing.

(a) The test coupon may be any geometry that is suitable for removal of the required specimens. It shall consist of a groove weld, a cavity in a plate, overlay, or other suitable geometry. The distance from each edge of the weld preparation to the edge of the test coupon shall be at least 3 in. measured transverse to the direction of welding. The depth of preparation shall be such that at least two layers of weld metal are deposited, one of which may be the surface temper bead layer and deep enough to remove the required test specimens.

(b) Only bend tests in accordance with QW-451 are required for the additional temper bead qualification when either hardness or toughness testing is also required. No qualified limitations or process essential or supplementary essential variables, if applicable, per QW-250 may be affected. Where neither maximum hardness nor toughness testing is specified by the applicable Code or Design Specification, all of the test requirements of QW-451 apply.

(c) When hardness testing is specified by a Construction Code or Design Specification, measurements shall be taken across the weld metal, heat-affected zone, and base metal using the Vickers method with a 10-kg load. Increments between measurements shall be as specified in ASTM E384. As an alternative to the Vickers method, Instrumented Indentation Testing in accordance with ASTM E2546 may be used with test forces in the macro range of 2.2 lbf to 265 lbf (1 kgf to 120 kgf) and increments between measurements as determined in accordance with ASTM E2546.

(1) Measurements shall be taken along a line at approximately mid-plane of the thickness of the test coupon weld metal. Along this line, there shall be

(-a) a minimum of two measurements in the weld metal fill layers.

(-b) at least one measurement on each: the weld beads against base metal, first-layer tempering beads, and the second-layer tempering beads.

(-c) a minimum of three measurements in the heat-affected zone. These measurements may be taken in a line approximately parallel to the HAZ when spacing between impressions does not allow for three measurements to be taken in a single line transverse to the HAZ.

(-d) a minimum of two measurements in the unaffected base metal.

(2) Additional measurements shall be taken along a line approximately 0.04 in. (1 mm) below the original base metal surface. Along this line, there shall be

(-a) a minimum of two measurements in the weld metal fill layers

(-b) at least one measurement on each: the weld beads against base metal, first-layer tempering beads, and the second-layer tempering beads

(-c) one measurement located immediately below the toe of the weld bead and at least one measurement on each side of that impression

(3) When the coupon is a full-penetration groove weld made from one side, additional measurements shall be taken along a line approximately 0.04 in. (1 mm) above the root side surface. Along this line, there shall be a minimum of two measurements in the weld metal, two in the heat-affected zone, and two in the unaffected base metal.

Full-penetration groove weld test coupons qualify full and partial penetration groove welds, fillet welds, and weld build-up. Partial penetration groove weld test coupons only qualify partial penetration groove welds, fillet welds, and build-up. Overlay test coupons only qualify overlay welds.

Hardness readings shall not exceed the hardness limits specified by the Construction Code or Design Specification.

(d) When toughness testing is specified by the applicable Construction Code or Design Specification, the test coupon shall be tested for toughness. The extent of testing (i.e., weld metal, HAZ, unaffected base metal), the testing temperature, and the acceptance criteria shall be as provided in the applicable Construction Code or Design Specification.

QW-290.6 In-Process Repair Welding.

(a) In-process repairs to welds made using temper bead welding are permitted. In-process repairs are defined as repairs in which a flaw is mechanically removed and a repair weld is made before welding of a joint is presented for final visual inspection. Examples of such repairs are areas of removal of porosity, incomplete fusion, etc., where sufficient metal has been mechanically removed that localized addition of weld metal is necessary in order to make the surface geometry suitable for continuation of normal welding.

(b) Surfaces to be repaired shall be prepared by mechanical removal of flaws and preparation of the surface to a suitable geometry.

(c) For processes other than manual and semiautomatic GTAW and PAW, repairs shall be made using the parameters given in the WPS for production temper bead welding. The approximate location of beads to be deposited relative to the original base metal surface shall be identified, and the applicable parameters shall be used for the layers to be deposited as specified by the WPS.

(d) When it is necessary to make repairs using manual or semiautomatic GTAW or PAW, a WPS shall be prepared based on PQRs developed for temper bead welding using machine or automatic GTAW or PAW, respectively. This WPS shall describe the size of the beads to be deposited and the volts, amps, and travel speed to be used for the beads against the base metal, for each temper bead layer and for the fill and surface temper bead layers corresponding to the locations where repair welding is to be done. These shall be within the equivalent power ratio for machine or automatic welding for the respective layers given in QW-409.29.

(e) Welders who will use manual and semiautomatic GTAW or PAW shall be qualified to use these welding processes as required by QW-300. In addition, each welder shall complete a proficiency demonstration. For this demonstration, each welder shall deposit two or more weld beads using WPS parameters for each deposit layer. The test coupon size shall be sufficiently large to make the required weld bead passes. The minimum pass length shall be 4 in. (100 mm). The heat input used by the welder shall be measured for each pass, and the size of each weld bead shall be measured for each pass, and they shall be as required by the WPS. The following essential variables shall apply for this demonstration:

(1) a change from one welding procedure to another

(2) a change from manual to semiautomatic welding and vice versa

(3) a change in position based on a groove weld in either plate or pipe as shown in Table QW-461.9

(4) continuity of qualification in accordance with QW-322 shall be based on following the WPS that was demonstrated in addition to using the process as required by QW-322

Copyrighted material licensed to Fermi National Laboratory by Clarivate Analytics (US) LLC, subscriptions.techstreet.com, downloaded on 2020-09-23 17:45:20 +0000 by Fermi National Laboratory User.
No further reproduction or distribution is permitted.

ARTICLE III
WELDING PERFORMANCE QUALIFICATIONS

QW-300 GENERAL

(19) **QW-300.1** This Article lists the welding processes separately, with the essential variables that apply to welder and welding operator performance qualifications.

The welder qualification is limited by the essential variables given for each welding process. These variables are listed in QW-350, and are defined in Article IV Welding Data. The welding operator qualification is limited by the essential variables given in QW-360 for each type of weld.

A welder or welding operator may be qualified by volumetric NDE of a test coupon or their initial production welding within the limitations of QW-304 and QW-305 or by bend tests taken from a test coupon.

For the purpose of establishing performance qualification continuity, the welder's or welding operator's qualification continuity begins from the date welding of the test piece(s) was completed, provided the required testing was performed and the test results obtained were acceptable.

QW-301 TESTS

QW-301.1 Intent of Tests. The performance qualification tests are intended to determine the ability of welders and welding operators to make sound welds.

QW-301.2 Qualification Tests. Each organization shall qualify each welder or welding operator for each welding process to be used in production welding. The performance qualification test shall be welded in accordance with qualified Welding Procedure Specifications (WPS), or Standard Welding Procedure Specifications (SWPS) listed in Mandatory Appendix E, except that when performance qualification is done in accordance with a WPS or SWPS that requires a preheat or postweld heat treatment, these may be omitted. Changes beyond which requalification is required are given in QW-350 for welders and in QW-360 for welding operators. Allowable visual, mechanical, and radiographic examination requirements are described in QW-304 and QW-305. Retests and renewal of qualification are given in QW-320.

The welder or welding operator who prepares the WPS qualification test coupons meeting the requirements of QW-200 is also qualified within the limits of the performance qualifications, listed in QW-304 for welders and in QW-305 for welding operators. He is qualified only within the limits for positions specified in QW-303.

QW-301.3 Identification of Welders and Welding Operators. Each qualified welder and welding operator shall be assigned an identifying number, letter, or symbol by the organization, which shall be used to identify the work of that welder or welding operator.

QW-301.4 Record of Tests. The record of Welder or Welding Operator Performance Qualification (WPQ) tests shall include the essential variables (QW-350 or QW-360), the type of test and test results, and the ranges qualified in accordance with QW-452 for each welder and welding operator. Suggested forms for these records are given in Forms QW-484A/QW-484B (see Nonmandatory Appendix B).

QW-302 TYPE OF TEST REQUIRED

QW-302.1 Mechanical Tests. Except as may be specified for special processes (QW-380), the type and number of test specimens required for mechanical testing shall be in accordance with QW-452. Groove weld test specimens shall be removed in a manner similar to that shown in Figures QW-463.2(a) through QW-463.2(g). Fillet weld test specimens shall be removed in a manner similar to that shown in Figures QW-462.4(a) through QW-462.4(d) and Figure QW-463.2(h).

All mechanical tests shall meet the requirements prescribed in QW-160 or QW-180, as applicable.

QW-302.2 Volumetric NDE. When the welder or welding operator is qualified by volumetric NDE, as permitted in QW-304 for welders and QW-305 for welding operators, the minimum length of coupon(s) to be examined shall be 6 in. (150 mm) and shall include the entire weld circumference for pipe(s), except that for small diameter pipe, multiple coupons of the same diameter pipe may be required, but the number need not exceed four consecutively made test coupons. The examination technique and acceptance criteria shall be in accordance with QW-191.

Copyrighted material licensed to Fermi National Laboratory by Clarivate Analytics (US) LLC, subscriptions.techstreet.com, downloaded on 2020-09-23 17:45:20 +0000 by Fermi National Laboratory User.
No further reproduction or distribution is permitted.

QW-302.3 Test Coupons in Pipe. For test coupons made on pipe in position 1G or 2G of Figure QW-461.4, two specimens shall be removed as shown for bend specimens in Figure QW-463.2(d) or Figure QW-463.2(e), omitting the specimens in the upper-right and lower-left quadrants, and replacing the root-bend specimen in the upper-left quadrant of Figure QW-463.2(d) with a face-bend specimen. For test coupons made on pipe in position 5G or 6G of Figure QW-461.4, specimens shall be removed in accordance with Figure QW-463.2(d) or Figure QW-463.2(e) and all four specimens shall pass the test. For test coupons made in both positions 2G and 5G on a single pipe test coupon, specimens shall be removed in accordance with Figure QW-463.2(f) or Figure QW-463.2(g).

QW-302.4 Visual Examination. For plate coupons all surfaces (except areas designated "discard") shall be examined visually per QW-194 before cutting of bend specimens. Pipe coupons shall be visually examined per QW-194 over the entire circumference, inside and outside.

QW-303 LIMITS OF QUALIFIED POSITIONS AND DIAMETERS (SEE QW-461)

QW-303.1 Groove Welds — General. Welders and welding operators who pass the required tests for groove welds in the test positions of Table QW-461.9 shall be qualified for the positions of groove welds, tack welds in joints to be groove or fillet welded, and fillet welds shown in Table QW-461.9. In addition, welders and welding operators who pass the required tests for groove welds shall also be qualified to make fillet welds in all thicknesses and pipe diameters of any size within the limits of the welding variables of QW-350 or QW-360 and tack welds in joints to be groove or fillet welded as limited in Table QW-461.9, as applicable.

QW-303.2 Fillet Welds — General. Welders and welding operators who pass the required tests for fillet welds in the test positions of Table QW-461.9 shall be qualified for the positions of fillet welds, and tack welds in joints to be fillet welded, shown in Table QW-461.9. Welders and welding operators who pass the tests for fillet welds shall be qualified to make tack welds in joints to be fillet welded as limited in Table QW-461.9 and fillet welds only in the thicknesses of material, sizes of fillet welds, and diameters of pipe and tube $2^{7}/_{8}$ in. (73 mm) O.D. and over, as shown in Table QW-452.5, within the applicable essential variables. Welders and welding operators who make fillet welds on pipe or tube less than $2^{7}/_{8}$ in. (73 mm) O.D. must pass the pipe fillet weld test per Table QW-452.4 or the required mechanical tests in QW-304 and QW-305 as applicable.

QW-303.3 Special Positions. An organization who does production welding in a special orientation may make the tests for performance qualification in this specific orientation. Such qualifications are valid only for the flat position and for the special positions actually tested, except that an angular deviation of ±15 deg is permitted in the inclination of the weld axis and the rotation of the weld face, as defined in Figures QW-461.1 and QW-461.2.

QW-303.4 Stud-Weld Positions. Qualification in the 4S position also qualifies for the 1S position. Qualification in the 4S and 2S positions qualifies for all positions.

QW-303.5 Tube-to-Tubesheet Welder and Welding Operator Qualification. (19)

DELETED

QW-304 WELDERS

Except for the special requirements of QW-380, each welder who welds under the rules of the Code shall have passed the mechanical and visual examinations prescribed in QW-302.1 and QW-302.4 respectively. Alternatively, welders may be qualified by volumetric NDE per QW-191 when making a groove weld using SMAW, SAW, GTAW, PAW, and GMAW (except short-circuiting mode for radiographic examination) or a combination of these processes, except for P-No. 21 through P-No. 26, P-No. 51 through P-No. 53, and P-No. 61 through P-No. 62 metals. Welders making groove welds in P-No. 21 through P-No. 26 and P-No. 51 through P-No. 53 metals with the GTAW process may also be qualified by volumetric NDE per QW-191. The Volumetric NDE shall be in accordance with QW-302.2.

A welder qualified to weld in accordance with one qualified WPS is also qualified to weld in accordance with other qualified WPSs, using the same welding process, within the limits of the essential variables of QW-350.

QW-304.1 Examination. Welds made in test coupons for performance qualification may be examined by visual and mechanical examinations (QW-302.1, QW-302.4) or by volumetric NDE (QW-302.2) for the process(es) and mode of arc transfer specified in QW-304. Alternatively, a minimum 6 in. (150 mm) length of the first production weld(s) made by a welder using the process(es) and/or mode of arc transfer specified in QW-304 may be examined by volumetric NDE.

(a) For pipe(s) welded in the 5G, 6G, or special positions, the entire production weld circumference made by the welder shall be examined.

(b) For small diameter pipe where the required minimum length of weld cannot be obtained from a single production pipe circumference, additional consecutive circumferences of the same pipe diameter made by the welder shall be examined, except that the total number of circumferences need not exceed four.

Copyrighted material licensed to Fermi National Laboratory by Clarivate Analytics (US) LLC, subscriptions.techstreet.com, downloaded on 2020-09-23 17:45:20 +0000 by Fermi National Laboratory User.
No further reproduction or distribution is permitted.

(c) The examination technique and acceptance criteria for production welds shall be in accordance with QW-191.

QW-304.2 Failure to Meet Examination Standards. If a production weld is selected for welder performance qualification and it does not meet the examination standards, the welder has failed the test. In this event, the entire production weld made by this welder shall be examined and repaired by a qualified welder or welding operator. Alternatively, retests may be made as permitted in QW-320.

QW-305 WELDING OPERATORS

Except for the special requirements of QW-380, each welding operator who welds under the rules of this Code shall have passed the mechanical and visual examinations prescribed in QW-302.1 and QW-302.4, respectively. Alternatively, welding operators may be qualified by volumetric NDE per QW-191 when making a groove weld using SMAW, SAW, GTAW, PAW, EGW, LLBW, and GMAW (except short-circuiting mode for radiographic examination) or a combination of these processes, except for P-No. 21 through P-No. 26, P-No. 51 through P-No. 53, and P-No. 61 through P-No. 62 metals. Welding operators making groove welds in P-No. 21 through P-No. 26 and P-No. 51 through P-No. 53 metals with the GTAW process may also be qualified by volumetric NDE. The volumetric NDE shall be in accordance with QW-302.2.

A welding operator qualified to weld in accordance with one qualified WPS is also qualified to weld in accordance with other qualified WPSs within the limits of the essential variables of QW-360.

QW-305.1 Examination. Welds made in test coupons may be examined by volumetric NDE (QW-302.2) or by visual and mechanical examinations (QW-302.1, QW-302.4). Alternatively, a minimum 3 ft (1 m) length of the first production weld(s) made entirely by the welding operator in accordance with a qualified WPS may be examined by volumetric NDE.

(a) For pipe(s) welded in the 5G, 6G, or special positions, the entire production weld circumference made by the welding operator shall be examined.

(b) For small diameter pipe where the required minimum length of weld cannot be obtained from a single production pipe circumference, additional consecutive circumferences of the same pipe diameter made by the welding operator shall be examined except that the total number of circumferences need not exceed four.

(c) The examination technique and acceptance criteria for production welds shall be in accordance with QW-191.

QW-305.2 Failure to Meet Examination Standards. If a portion of a production weld is selected for welding operator performance qualification, and it does not meet the examination standards, the welding operator has failed the test. In this event, the entire production weld made by this welding operator shall be examined completely and repaired by a qualified welder or welding operator. Alternatively, retests may be made as permitted in QW-320.

QW-306 COMBINATION OF WELDING PROCESSES

Each welder or welding operator shall be qualified within the limits given in QW-301 for the specific welding process(es) he will be required to use in production welding. A welder or welding operator may be qualified by making tests with each individual welding process in separate test coupons, or with a combination of welding processes in a single test coupon. Two or more welders or welding operators, each using the same or a different welding process, may be qualified in combination in a single test coupon. For combination qualifications in a single test coupon, the limits for thicknesses of deposited weld metal, and bend and fillet testing are given in QW-452 and shall be considered individually for each welder or welding operator for each welding process or whenever there is a change in an essential variable. A welder or welding operator qualified in combination on a single test coupon is qualified to weld in production using any of his processes individually or in different combinations, provided he welds within his limits of qualification with each specific process.

Failure of any portion of a combination test in a single test coupon constitutes failure of the entire combination.

QW-310 QUALIFICATION TEST COUPONS

QW-310.1 Test Coupons. The test coupons may be plate, pipe, or other product forms. When all position qualifications for pipe are accomplished by welding one pipe assembly in both the 2G and 5G positions (Figure QW-461.4), NPS 6 (DN 150), NPS 8 (DN 200), NPS 10 (DN 250), or larger diameter pipe shall be employed to make up the test coupon as shown in Figure QW-463.2(f) for NPS 10 (DN 250) or larger pipe and in Figure QW-463.2(g) for NPS 6 (DN 150) or NPS 8 (DN 200) diameter pipe.

QW-310.2 Welding Groove With Backing. The dimensions of the welding groove on the test coupon used in making qualification tests for double-welded groove welds or single-welded groove welds with backing shall be the same as those for any Welding Procedure Specification (WPS) qualified by the organization, or shall be as shown in Figure QW-469.1.

A single-welded groove-weld test coupon with backing or a double-welded groove-weld test coupon shall be considered welding with backing. Partial penetration groove welds and fillet welds are considered welding with backing.

Copyrighted material licensed to Fermi National Laboratory by Clarivate Analytics (US) LLC, subscriptions.techstreet.com, downloaded on 2020-09-23 17:45:20 +0000 by Fermi National Laboratory User.
No further reproduction or distribution is permitted.

QW-310.3 Welding Groove Without Backing. The dimensions of the welding groove of the test coupon used in making qualification tests for single-welded groove welds without backing shall be the same as those for any WPS qualified by the organization, or as shown in Figure QW-469.2.

QW-320 RETESTS AND RENEWAL OF QUALIFICATION

QW-321 RETESTS

A welder or welding operator who fails one or more of the tests prescribed in QW-304 or QW-305, as applicable, may be retested under the following provisions.

QW-321.1 Immediate Retest Using Visual Examination. When the qualification coupon has failed the visual examination of QW-302.4, retesting shall be by visual examination before conducting the mechanical testing.

When an immediate retest is made, the welder or welding operator shall make two consecutive test coupons for each position which he has failed, all of which shall pass the visual examination requirements.

The examiner may select one of the successful test coupons from each set of retest coupons which pass the visual examination for conducting the mechanical testing.

QW-321.2 Immediate Retest Using Mechanical Testing. When the qualification coupon has failed the mechanical testing of QW-302.1, retesting shall be by mechanical testing.

When an immediate retest is made, the welder or welding operator shall make two consecutive test coupons for each position which he has failed, all of which shall pass the test requirements.

QW-321.3 Immediate Retest Using Volumetric NDE. When the qualification coupon has failed the volumetric NDE of QW-302.2, the immediate retest shall be by the same examination method.

(a) For welders and welding operators the retest shall be to examine two 6 in. (150 mm) plate coupons; for pipe, to examine two or more pipe coupons of the same diameter for a total of 12 in. (300 mm) of weld, which shall include the entire weld circumference for pipe or pipes (for small diameter pipe the total number of consecutively made test coupons need not exceed eight).

(b) At the option of the organization, the welder who has failed the production weld alternative test may be retested by examining additional weld areas equal to twice the required length or number of pipe circumferences of the same or consecutively made production weld(s) specified in QW-304.1. If this length of weld passes the test, the welder is qualified and the area of weld on which he had previously failed the test shall be repaired by him or another qualified welder. If this length does not meet the examination standards, the welder has failed the retest and all of the production welds made by this welder shall be examined completely and repaired by a qualified welder or welding operator.

(c) At the option of the organization, the welding operator who has failed the production weld alternative test may be retested by examining additional weld areas equal to twice the required length or number of pipe circumferences of the same or consecutively made production weld (s) specified in QW-305.1. If this length of weld passes the test, the welding operator is qualified and the area of weld on which he had previously failed the test shall be repaired by him or another qualified welder or welding operator. If this length does not meet the examination standards, the welding operator has failed the retest and all of the production welds made by this welding operator shall be examined completely and repaired by a qualified welder or welding operator.

QW-321.4 Further Training. When the welder or the welding operator has had further training or practice, a new test shall be made for each position on which he failed to meet the requirements.

QW-322 EXPIRATION, REVOCATION, AND RENEWAL OF QUALIFICATION

QW-322.1 Continuity and Revocation of Qualification.

(a) Continuity. The performance qualification of a welder or welding operator shall remain valid, provided no greater than 6 months have passed since the qualified welding process was last used under the supervision and control of the qualifying or participating organization(s) as identified in QG-106.2 and QG-106.3, respectively, by the

(1) welder using manual or semiautomatic welding, or

(2) welding operator using machine or automatic welding

(b) Revocation. When there is a specific reason to question the welder's or the welding operator's ability to make welds that meet the specification, the qualifications that support the welding he is doing shall be revoked. All other qualifications not questioned remain in effect.

QW-322.2 Renewal of Qualification.

(a) Renewal of qualification that has expired under the rules of QW-322.1(a) may be achieved for any process by welding a single test coupon of either plate or pipe, of any material, thickness or diameter, in any position, as required by QW-301 and successfully completing the testing required by QW-302. This successful test renews the welder or welding operator's previous qualifications for that process for those materials, thicknesses, diameters, positions, and other variables for which he was previously qualified.

Providing the requirements of QW-304 and QW-305 are satisfied, renewal of qualification under QW-322.1(a) may be done on production work.

Copyrighted material licensed to Fermi National Laboratory by Clarivate Analytics (US) LLC, subscriptions.techstreet.com, downloaded on 2020-09-23 17:45:20 +0000 by Fermi National Laboratory User.
No further reproduction or distribution is permitted.

(b) Welders and welding operators whose qualification(s) have been revoked under the provisions of QW-322.1(b) above shall requalify. Qualification shall utilize a test coupon appropriate for the revoked qualification(s). The coupon shall be welded as required by QW-301 and tested as required by QW-302. Successful completion of the qualification test restores the revoked qualification(s).

QW-350 WELDING VARIABLES FOR WELDERS

QW-351 GENERAL

A welder shall be requalified whenever a change is made in one or more of the essential variables listed for each welding process.

Where a combination of welding processes is required to make a weldment, each welder shall be qualified for the particular welding process or processes he will be required to use in production welding. A welder may be qualified by making tests with each individual welding process, or with a combination of welding processes in a single test coupon.

The limits of weld metal thickness for which he will be qualified are dependent upon the approximate thickness of the weld metal he deposits with each welding process, exclusive of any weld reinforcement, this thickness shall be considered the test coupon thickness as given in QW-452.

In any given production weldment, welders may not deposit a thickness greater than that permitted by QW-452 for each welding process in which they are qualified.

Table QW-352
Oxyfuel Gas Welding (OFW)
Essential Variables

Paragraph		Brief of Variables
QW-402 Joints	.7	+ Backing
QW-403 Base Metals	.2	Maximum qualified
	.18	ϕ P-Number
QW-404 Filler Metals	.14	± Filler
	.15	ϕ F-Number
	.31	ϕ *t* Weld deposit
QW-405 Positions	.1	+ Position
QW-408 Gas	.7	ϕ Type fuel gas

Table QW-353
Shielded Metal-Arc Welding (SMAW)
Essential Variables

Paragraph		Brief of Variables
QW-402 Joints	.4	− Backing
QW-403 Base Metals	.16	ϕ Pipe diameter
	.18	ϕ P-Number
QW-404 Filler Metals	.15	ϕ F-Number
	.30	ϕ t Weld deposit
QW-405 Positions	.1	+ Position
	.3	ϕ ↑↓ Vertical welding

Table QW-354
Semiautomatic Submerged-Arc Welding (SAW)
Essential Variables

Paragraph		Brief of Variables
QW-403 Base Metals	.16	ϕ Pipe diameter
	.18	ϕ P-Number
QW-404 Filler Metals	.15	ϕ F-Number
	.30	*t* Weld deposit
QW-405 Positions	.1	+ Position

Table QW-355
Semiautomatic Gas Metal-Arc Welding (GMAW)
[This Includes Flux-Cored Arc Welding (FCAW)] Essential Variables

Paragraph		Brief of Variables
QW-402 Joints	.4	− Backing
QW-403 Base Metals	.16	ϕ Pipe diameter
	.18	ϕ P-Number
QW-404 Filler Metals	.15	ϕ F-Number
	.30	ϕ *t* Weld deposit
	.32	*t* Limit (S. Cir. Arc.)
QW-405 Positions	.1	+ Position
	.3	ϕ ↑↓ Vertical welding
QW-408 Gas	.8	− Backing gas
QW-409 Electrical	.2	ϕ Transfer mode

Copyrighted material licensed to Fermi National Laboratory by Clarivate Analytics (US) LLC, subscriptions.techstreet.com, downloaded on 2020-09-23 17:45:20 +0000 by Fermi National Laboratory User.
No further reproduction or distribution is permitted.

Table QW-356
Manual and Semiautomatic Gas Tungsten-Arc Welding (GTAW)

Essential Variables

Paragraph		Brief of Variables
QW-402 Joints	.4	– Backing
QW-403 Base Metals	.16	ϕ Pipe diameter
	.18	ϕ P-Number
QW-404 Filler Metals	.14	± Filler
	.15	ϕ F-Number
	.22	± Inserts
	.23	ϕ Filler metal product form
	.30	ϕ *t* Weld deposit
QW-405 Positions	.1	+ Position
	.3	ϕ ↑↓ Vertical welding
QW-408 Gas	.8	– Backing gas
QW-409 Electrical	.4	ϕ Current or polarity

Legend:
ϕ Change
+ Addition
– Deletion
↑ Uphill
↓ Downhill

Table QW-357
Manual and Semiautomatic Plasma-Arc Welding (PAW)

Essential Variables

Paragraph		Brief of Variables
QW-402 Joints	.4	– Backing
QW-403 Base Metals	.16	ϕ Pipe diameter
	.18	ϕ P-Number
QW-404 Filler Metals	.14	± Filler
	.15	ϕ F-Number
	.22	± Inserts
	.23	ϕ Filler metal product form
	.30	ϕ *t* Weld deposit
QW-405 Positions	.1	+ Position
	.3	ϕ ↑↓ Vertical welding
QW-408 Gas	.8	– Backing gas

Legend:
ϕ Change
+ Addition
– Deletion
↑ Uphill
↓ Downhill

QW-360 WELDING VARIABLES FOR WELDING OPERATORS

QW-361 GENERAL

A welding operator shall be requalified whenever a change is made in one of the following essential variables (QW-361.1 and QW-361.2). There may be exceptions or additional requirements for the processes of QW-362, QW-363, and the special processes of QW-380.

QW-361.1 Essential Variables — Automatic Welding.

(a) A change from automatic to machine welding.

(b) A change in the welding process.

(c) For electron beam and laser welding, the addition or deletion of filler metal.

(d) For laser welding and hybrid welding using lasers, a change in laser type (e.g., a change from CO_2 to YAG).

(e) For friction welding, a change from continuous drive to inertia welding or vice versa.

(f) For electron beam welding, a change from vacuum to out-of-vacuum equipment, and vice versa.

QW-361.2 Essential Variables — Machine Welding.

(a) A change in the welding process.

(b) A change from direct visual control to remote visual control and vice-versa.

(c) The deletion of an automatic arc voltage control system for GTAW.

(d) The deletion of automatic joint tracking.

(e) The addition of welding positions other than those already qualified (see QW-120, QW-130, and QW-303).

(f) The deletion of consumable inserts, except that qualification with consumable inserts shall also qualify for fillet welds and welds with backing.

(g) The deletion of backing. Double-welded groove welds are considered welding with backing.

(h) A change from single pass per side to multiple passes per side but not the reverse.

(i) For hybrid plasma-GMAW welding, the essential variable for welding operator qualification shall be in accordance with Table QW-357.

QW-362 ELECTRON BEAM WELDING (EBW), LASER BEAM WELDING (LBW), HYBRID WELDING, AND FRICTION WELDING (FRW)

The performance qualification test coupon shall be production parts or test coupons that have joint designs permitted by any qualified WPS. The coupon shall be mechanically tested in accordance with QW-452. Alternatively, when the part or coupon does not readily lend itself to the preparation of bend test specimens, the part may be cut so that at least two full-thickness weld cross sections are exposed. Those cross sections shall be smoothed and etched with a suitable etchant (see QW-470) to give a clear definition of the weld metal and heat-affected zone. The weld metal and heat-affected

Copyrighted material licensed to Fermi National Laboratory by Clarivate Analytics (US) LLC, subscriptions.techstreet.com, downloaded on 2020-09-23 17:45:20 +0000 by Fermi National Laboratory User.
No further reproduction or distribution is permitted.

zone shall exhibit complete fusion and freedom from cracks. The essential variables for welding operator qualification shall be in accordance with QW-361.

QW-363 STUD WELDING

Stud welding operators shall be performance qualified in accordance with the test requirements of QW-192.2 and the position requirements of QW-303.4.

QW-380 SPECIAL PROCESSES

(19) QW-381 CORROSION-RESISTANT WELD METAL OVERLAY

QW-381.1 The size of test coupons, limits of base metal thickness qualification, required examinations and tests, and test specimens shall be as specified in QW-381.2 and Table QW-453.

QW-381.2 The qualification test coupon for performance qualification shall consist of base metal not less than 6 in. (150 mm) × 6 in. (150 mm). The weld overlay cladding shall be a minimum of $1\frac{1}{2}$ in. (38 mm) wide by approximately 6 in. (150 mm) long. For qualification on pipe, the pipe length shall be a minimum of 6 in. (150 mm) and the diameter shall be the minimum needed to allow the required number of test specimens. The weld overlay shall be continuous around the circumference of the test coupon. For processes depositing a weld bead width greater than $\frac{1}{2}$ in. (13 mm) wide, the weld overlay shall consist of a minimum of three weld beads in the first layer.

(a) The test coupon shall be sectioned to make side-bend test specimens perpendicular to the direction of the welding in accordance with QW-161. For coupons that are less than $\frac{3}{8}$ in. (10 mm) thick, the width of the side-bend specimens may be reduced to the thickness of the test coupon. Test specimens shall be removed at locations specified in Figure QW-462.5(c) or Figure QW-462.5(d).

(b) Welders or welding operators who pass the tests for corrosion-resistant weld metal overlay cladding shall only be qualified to apply corrosion-resistant weld metal overlay portion of a groove weld joining clad materials or lined materials.

(c) The essential variables of QW-350 and QW-360 shall apply for welders and welding operators, respectively, except there is no limit on the maximum thickness of corrosion-resistant overlay that may be applied in production. When specified as essential variables, the limitations of position and diameter qualified for groove welds shall apply to overlay welds, except the limitations on diameter qualified shall apply only to welds deposited in the circumferential direction.

QW-381.3 Qualification on Clad Materials. A welder or welding operator who has qualified on clad material or lined material as provided in QW-383.1(b) is also qualified to deposit corrosion-resistant weld metal overlay.

QW-381.4 Alternative Qualification With Groove Weld Tests. When a chemical composition is not specified in the WPS, welders or welding operators who successfully complete a groove weld performance qualification test meeting the corrosion-resistant overlay bend test requirements of QW-163 may be considered qualified for corrosion-resistant overlay welding within the ranges defined in QW-350 or QW-360.

QW-382 HARD-FACING WELD METAL OVERLAY (WEAR RESISTANT)

QW-382.1 Qualification Test. (19)

(a) The test base metal coupon for performance qualification shall have minimum dimensions of 6 in. (150 mm) wide × approximately 6 in. (150 mm) long with a hard-faced layer a minimum of $1\frac{1}{2}$ in. (38 mm) wide × 6 in. (150 mm) long. The minimum hard-faced thickness shall be as specified in the WPS. Alternatively, the qualification may be performed on a test base metal coupon that represents the size of the production part. For qualification on pipe, the pipe length shall be 6 in. (150 mm) minimum and the diameter shall be the minimum needed to allow the required number of test specimens. The weld overlay shall be continuous around the circumference of the test coupon.

(b) The base metal shall be sectioned transversely to the direction of the hard-facing overlay. The two faces of the hard facing exposed by sectioning shall be polished and etched with a suitable etchant and shall be visually examined with 5X magnification for cracks in the base metal or the heat-affected zone, lack of fusion, or other linear defects. The overlay and base metal shall meet the requirements specified in the WPS. All exposed faces shall be examined. See Figure QW-462.5(b) for pipe and Figure QW-462.5(e) for plate.

(c) At a thickness greater than or equal to the minimum thickness specified in the WPS, the weld surface shall be examined by the liquid penetrant method and shall meet the acceptance standards in QW-195.2 or as specified in the WPS. Surface conditioning prior to liquid penetrant examination is permitted.

(d) The size of the test coupons, limits of base metal thickness qualification, required examinations and tests, and test specimens shall be as specified in Table QW-453. Base material test coupons may be as permitted in QW-423.

(e) Welders and welding operators who pass the tests for hard-facing weld metal overlay are qualified for hard-facing overlay only.

(f) The essential variable, of QW-350 and QW-360, shall apply for welders and welding operators, respectively, except there is no limit on the maximum thickness of hard-facing overlay that may be applied in production. When specified as essential variables, the limitations of position and diameter qualified for groove welds shall

Copyrighted material licensed to Fermi National Laboratory by Clarivate Analytics (US) LLC, subscriptions.techstreet.com, downloaded on 2020-09-23 17:45:20 +0000 by Fermi National Laboratory User.
No further reproduction or distribution is permitted.

apply to overlay welds except the limitations on diameter qualified shall apply only to welds deposited in the circumferential direction.

(g) Qualification with one AWS classification within an SFA specification qualifies for all other AWS classifications in that SFA specification.

(h) A change in welding process shall require welder and welding operator requalification.

QW-383 JOINING OF CLAD MATERIALS AND APPLIED LININGS

(19) **QW-383.1 Clad Materials.**

(a) Welders and welding operators who will join the base material portion of clad materials shall be qualified for groove welding in accordance with QW-301. Welders and welding operators who will apply the cladding portion of a weld between clad materials shall be qualified in accordance with QW-381. Welders and welding operators need only be qualified for the portions of clad material welds that they will make in production.

(b) As an alternative to (a), welders and welding operators may be qualified using clad material test coupons. The test coupon shall be at least $^3/_8$ in. (10 mm) thick and of dimensions such that a groove weld can be made to join the base materials and the corrosion-resistant weld metal overlay can be applied to the completed groove weld. Four side-bend test specimens shall be removed from the completed test coupon and tested. The groove weld portion and the corrosion-resistant weld metal overlay portion of the test coupon shall be evaluated using the respective criteria in QW-163. Welders and welding operators qualified using clad material test coupons are qualified to join base materials as provided by QW-301, and they are qualified to apply corrosion-resistant weld metal overlay as provided by QW-381.

QW-383.2 Applied Linings.

(a) Welders and welding operators shall be qualified following the rules for making groove or fillet welds in accordance with QW-301. Plug welds for attaching applied linings shall be considered equivalent to fillet welds for the purpose of performance qualification.

(b) An alternate test coupon shall consist of the geometry to be welded, except the base material need not exceed 1 in. (25 mm) in thickness. The welded test coupon shall be sectioned and etched to reveal the weld and heat-affected zone. The weld shall show penetration into the base metal.

QW-384 RESISTANCE WELDING OPERATOR QUALIFICATION

Each welding operator shall be tested on each machine type which he will use. Qualification testing on any P-No. 21 through P-No. 26 metal shall qualify the operator for all metals. Qualification on any P-No. 1 through P-No. 15F or any P-No. 41 through P-No. 49 metals shall qualify the operator for all P-No. 1 through P-No. 15F and P-No. 41 through P-No. 49 metals. Qualification testing on any P-No. 51 through P-No. 53, P-No. 61, or P-No. 62 metal shall qualify the operator for all P-No. 51 through P-No. 53, P-No. 61, and P-No. 62 metals.

(a) Qualification for spot and projection welding shall consist of making a set of ten consecutive welds, five of which shall be subjected to mechanical shear tests or peel tests, and five to macro-examination. Examination, testing, and acceptance criteria shall be in accordance with QW-196.

(b) Qualification for seam welding shall consist of that testing specified in QW-286.3, except that only one transverse cross section and one longitudinal cross section are required.

QW-385 FLASH WELDING OPERATOR QUALIFICATION

Each welding operator shall be tested by welding a test coupon following any WPS. The test coupon shall be welded and tested in accordance with QW-199. Qualification following any flash welding WPS qualifies the operator to follow all flash welding WPSs.

Production weld sampling tests required by other Sections may be used to qualify welding operators. The test method, extent of tests, and acceptance criteria of the other Sections and QW-199.2 shall be met when this is done.

QW-386 DIFFUSION WELDING OPERATOR QUALIFICATION

Each welding operator shall be tested by welding a procedure qualification test coupon in accordance with QW-185.1. The coupon shall be metallographically examined in accordance with QW-185.3.

QW-387 TUBE-TO-TUBESHEET WELDER AND WELDING OPERATOR QUALIFICATION (19)

(a) When the applicable Code Section requires the use of QW-193 for tube-to-tubesheet demonstration mockup qualification tests, QW-193.2 shall apply.

(b) Essential performance qualification variables applicable for each welding process listed in QW-350 shall also be observed in addition to the variables of Table QW-388. A change in the welding process used shall require requalification.

Copyrighted material licensed to Fermi National Laboratory by Clarivate Analytics (US) LLC, subscriptions.techstreet.com, downloaded on 2020-09-23 17:45:20 +0000 by Fermi National Laboratory User.
No further reproduction or distribution is permitted.

(c) If specific qualification test requirements are not specified by the applicable Code Section, welders and welding operators shall be qualified with one of the following methods:

(1) a demonstration mockup per the requirements of QW-193.2, except that for welding operators

(-a) the hole pattern does not need to be duplicated

(-b) the type or model of equipment is an essential variable

(2) a groove-weld qualification per the requirements of QW-303.1

(19)

Table QW-388
Essential Variables for Tube-to-Tubesheet Performance Qualification

(Welders; All Welding Processes)

Paragraph		Brief of Variables
QW-402 Joints	.31	≤ Ligament size
	.32	ϕ Joint configuration
QW-403 Base Metals	.16	ϕ Tube diameter
	.32	ϕ Tube thickness
QW-404 Filler Metals	.58	± Preplaced filler metal
QW-409 Electrical	.10	> Amperage

Legend:
ϕ Change
± Addition or deletion
> Increase

QW-389 CAPACITOR DISCHARGE WELDING OPERATOR QUALIFICATION (19)

Welding operators using low-energy capacitor discharge welding in accordance with QW-289 are not required to be qualified.

Copyrighted material licensed to Fermi National Laboratory by Clarivate Analytics (US) LLC, subscriptions.techstreet.com, downloaded on 2020-09-23 17:45:20 +0000 by Fermi National Laboratory User.
No further reproduction or distribution is permitted.

ARTICLE IV
WELDING DATA

QW-400 VARIABLES

QW-401 GENERAL

Each welding variable described in this Article is applicable as an essential, supplementary essential, or nonessential variable for procedure qualification when referenced in QW-250 for each specific welding process. Essential variables for performance qualification are referenced in QW-350 for each specific welding process. A change from one welding process to another welding process is an essential variable and requires requalification.

QW-401.1 Supplementary Essential Variable (Procedure). Supplementary essential variables are in addition to the essential variables for each welding process.

When a procedure has been previously qualified to satisfy all requirements other than toughness, it is then necessary only to prepare an additional test coupon using the same procedure with the same essential variables, but additionally with all of the required supplementary essential variables, with the coupon long enough to provide the necessary toughness specimens.

When a procedure has been previously qualified to satisfy all requirements including toughness, but one or more supplementary essential variable is changed, then it is only necessary to prepare an additional test coupon using the same welding procedure and the new supplementary essential variable(s), with the coupon long enough to provide the necessary toughness specimens. If a previously qualified weld procedure has satisfactory toughness values in the weld metal, then it is necessary only to test toughness specimens from the heat-affected zone when such are required.

When essential variables are qualified by one or more PQRs and supplementary essential variables are qualified by other PQRs, the ranges of essential variables established by the former PQRs are only affected by the latter to the extent specified in the applicable supplementary essential variable (e.g., essential variable QW-403.8 governs the minimum and maximum thickness of base metal qualified. When supplementary essential variable QW-403.6 applies, it modifies only the minimum thickness qualified, not the maximum).

QW-401.2 The welding data includes the welding variables grouped as joints, base metals, filler metals, position, preheat, postweld heat treatment, gas, electrical characteristics, and technique. For convenience, variables for each welding process are summarized in Table QW-416 for performance qualification.

QW-402 JOINTS

QW-402.1 A change in the type of groove (Vee-groove, U-groove, single-bevel, double-bevel, etc.).

QW-402.2 The addition or deletion of a backing.

QW-402.3 A change in the nominal composition of the backing.

QW-402.4 The deletion of the backing in single-welded groove welds. Double-welded groove welds are considered welding with backing.

QW-402.5 The addition of a backing or a change in its nominal composition.

QW-402.6 An increase in the fit-up gap, beyond that initially qualified.

QW-402.7 The addition of backing.

QW-402.8 A change in nominal size or shape of the stud at the section to be welded.

QW-402.9 In stud welding, a change in shielding as a result of ferrule or flux type.

QW-402.10 A change in the specified root spacing.

QW-402.11 The addition or deletion of nonmetallic retainers or nonfusing metal retainers.

QW-402.12 The welding procedure qualification test shall duplicate the joint configuration to be used in production within the limits listed, except that pipe or tube to pipe or tube may be used for qualification of a pipe or tube to other shapes, and solid round to solid round may be used for qualification of a solid round to other shapes

(a) any change exceeding ±10 deg in the angle measured for the plane of either face to be joined, to the axis of rotation

(b) a change in cross-sectional area of the weld joint greater than 10%

(c) a change in the outside diameter of the cylindrical weld interface of the assembly greater than ± 10%

(d) a change from solid to tubular cross section at the joint or vice versa regardless of (b)

QW-402.13 A change in the method of joining from spot to projection to seam or vice versa.

Copyrighted material licensed to Fermi National Laboratory by Clarivate Analytics (US) LLC, subscriptions.techstreet.com, downloaded on 2020-09-23 17:45:20 +0000 by Fermi National Laboratory User.
No further reproduction or distribution is permitted.

QW-402.14 An increase or decrease of more than 10% in the spacing of the welds when they are within two diameters of each other.

QW-402.15 A change in the size or shape of the projection in projection welding.

QW-402.16 A decrease in the distance between the approximate weld interface and the final surface of the production corrosion-resistant or hard-facing weld metal overlay below the minimum thickness qualified as shown in Figures QW-462.5(a) through QW-462.5(e). There is no limit on the maximum thickness for corrosion-resistant or hard-facing weld metal overlay that may be used in production.

QW-402.17 An increase in the thickness of the production spray fuse hard-facing deposit above the thickness deposited on the procedure qualification test coupon.

QW-402.18 For lap joints,

(a) a decrease of more than 10% in the distance to the edge of the material

(b) an increase in the number of layers of material

(c) a change in surface preparation or finish from that qualified

QW-402.19 A change in the nominal diameter or nominal thickness for tubular cross sections, or an increase in the total cross section area beyond that qualified for all nontubular cross sections.

(19) **QW-402.20**

DELETED

QW-402.21 A change in the method or equipment used to minimize internal flash.

QW-402.22 A change in the end preparation method.

QW-402.23 For test coupons less than $1\frac{1}{2}$ in. (38 mm) thick, the addition of a cooling medium (water, flowing gas, etc.) to the back side of the weld. Qualification on test coupons less than $1\frac{1}{2}$ in. (38 mm) thick with a cooling medium on the back side of the weld qualifies base metal thickness equal to or greater than the test coupon thickness with and without coolant.

QW-402.24 Qualification with a cooling medium (water, flowing gas, etc.) on the root side of a test coupon weld that is welded from one side qualifies all thicknesses of base metal with cooling medium down to the thickness of the test coupon at the root or $\frac{1}{2}$ in. (13 mm), whichever is less.

QW-402.25 A change from lap joint to groove welding, and vice versa.

QW-402.26 A reduction of more than 5 deg in the edge preparation bevel angle for groove welds.

QW-402.27 A change in material of fixed backing anvils (when used). A change in backing anvil design that affects the weld cooling rate (e.g., a change from air-cooled to water-cooled, and vice versa). This variable is not applicable to tube-to-tubesheet or double-sided welds with overlapping fusion zones, or welds completed using self-reacting pins.

QW-402.28 A change in joint design from that qualified, including edge preparation geometry (e.g., a change from square butt edge to beveled edge), reductions in the smallest joint path radius to less than the shoulder radius, or joint paths crossing themselves or another HAZ.

QW-402.29 A change in joint spacing greater than ±10% of the qualification test coupon thickness. For WPSs qualified using intimate edge contact, the maximum allowable joint spacing is $\frac{1}{16}$ in. (1.5 mm).

QW-402.30 A decrease of 10% or more in the specified width of the ligament between tube holes when the specified width of the ligament is less than the greater of $\frac{3}{8}$ in. (10 mm) or three times the specified tube wall thickness. (19)

QW-402.31 For tube-to-tubesheet welding: an increase in the depth by more than 10%, an increase or decrease in the preparation angle of the weld groove by more than 5 deg, or a change in the groove type. (19)

QW-403 BASE METALS

QW-403.1 A change from a base metal listed under one P-Number in Table QW/QB-422 to a metal listed under another P-Number or to any other base metal. When joints are made between two base metals that have different P-Numbers, a procedure qualification shall be made for the applicable combination of P-Numbers, even though qualification tests have been made for each of the two base metals welded to itself.

QW-403.2 The maximum thickness qualified is the thickness of the test coupon.

QW-403.3

(a) For full penetration single-sided welds without backing where the verification of penetration can be made, an increase of more than 20% in base metal thickness when the test coupon thickness is less than or equal to 1 in. (25 mm), and more than 10% in base metal thickness when the test coupon thickness is greater than 1 in. (25 mm).

(b) For all other welds, an increase of more than 10% in base metal thickness when the test coupon thickness is less than or equal to 1 in. (25 mm), and more than 5% in base metal thickness when the test coupon thickness is greater than 1 in. (25 mm).

QW-403.4 Welding procedure qualifications shall be made using a base metal of the same type or grade or another base metal listed in the same group (see Table QW/QB-422) as the base metal to be used in production

Copyrighted material licensed to Fermi National Laboratory by Clarivate Analytics (US) LLC, subscriptions.techstreet.com, downloaded on 2020-09-23 17:45:20 +0000 by Fermi National Laboratory User.
No further reproduction or distribution is permitted.

welding. When joints are to be made between base metals from two different groups, a procedure qualification must be made for the applicable combination of base metals, even though procedure qualification tests have been made for each of the two base metals welded to itself.

(19) **QW-403.5** Welding procedure specifications shall be qualified using one of the following:

(a) the same base metal (including type or grade) to be used in production welding

(b) for ferrous materials, a base metal listed in the same P-Number Group Number in Table QW/QB-422 as the base metal to be used in production welding

(c) for nonferrous materials, a base metal listed with the same P-Number UNS Number in Table QW/QB-422 as the base metal to be used in production welding

For ferrous materials in Table QW/QB-422, a procedure qualification shall be made for each P-Number Group Number combination of base metals, even though procedure qualification tests have been made for each of the two base metals welded to itself. If, however, two or more qualification records have the same essential and supplementary essential variables, except that the base metals are assigned to different Group Numbers within the same P-Number, then the combination of base metals is also qualified. In addition, when base metals of two different Group Numbers within the same P-Number are qualified using a single test coupon, that coupon qualifies the welding of those two Group Numbers within the same P-Number to themselves as well as to each other using the variables qualified.

This variable does not apply when toughness testing of the heat-affected zone is not required by other Sections.

QW-403.6 The minimum base metal thickness qualified is the thickness of the test coupon T or $^5/_8$ in. (16 mm), whichever is less. However, where T is $^1/_4$ in. (6 mm) or less, the minimum thickness qualified is $^1/_2T$. This variable does not apply when a WPS is qualified with a PWHT above the upper transformation temperature or when an austenitic or P-No. 10H material is solution annealed after welding.

QW-403.8 A change in base metal thickness beyond the range qualified in QW-451, except as otherwise permitted by QW-202.4(b).

QW-403.9 For single-pass or multipass welding in which any pass is greater than $^1/_2$ in. (13 mm) thick, an increase in base metal thickness beyond 1.1 times that of the qualification test coupon.

QW-403.10 For the short-circuiting transfer mode of the gas metal-arc process, when the qualification test coupon thickness is less than $^1/_2$ in. (13 mm), an increase in thickness beyond 1.1 times that of the qualification test coupon. For thicknesses of $^1/_2$ in. (13 mm) and greater, use Table QW-451.1 or Table QW-451.2, as applicable.

QW-403.11 Base metals specified in the WPS shall be qualified by a procedure qualification test that was made using base metals in accordance with QW-424.

QW-403.12 A change from a base metal listed under one P-Number of Table QW/QB-422 to a base metal listed under another P-Number. When joints are made between two base metals that have different P-Numbers, requalification is required even though the two base metals have been independently qualified using the same procedure. When the melt-in technique is used for joining P-No. 1, P-No. 3, P-No. 4, and P-No. 5A, a procedure qualification test with one P-Number metal shall also qualify for that P-Number metal welded to each of the lower P-Number metals, but not vice versa.

QW-403.15 Welding procedure qualifications for electron beam welding shall be made using a base metal of the same type or grade or another base metal listed in the same P-Number (and the same group where given — see Table QW/QB-422) as the base metal to be used in production welding. When joints are to be made between base metals from two different P-Numbers (or two different groups), a procedure qualification must be made for the applicable combination of base metals even though procedure qualification tests have been made for each of the two base metals welded to itself.

QW-403.16 A change in the pipe diameter beyond the range qualified in QW-452, except as otherwise permitted in QW-303.1, QW-303.2, QW-381.2(c), or QW-382.1(f). For tube-to-tubesheet welding: an increase or decrease greater than 10% of the specified tube diameter. (19)

(a) For a groove weld attaching a set-on nozzle or branch (with the weld preparation on the nozzle or branch), the range qualified from Table QW-452.3 shall be based on the nozzle or branch pipe O.D.

(b) For a groove weld attaching a set-in nozzle or branch (with the weld preparation on the shell, head, or run pipe), the range qualified from Table QW-452.3 shall be based on the shell, head, or run pipe O.D.

QW-403.17 In stud welding, a change in combination of base metal listed under one P-Number in Table QW/QB-422 and stud metal P-Number (as defined in the following Note), or to any other base metal and stud metal combination.

NOTE: Stud metal shall be classified by nominal chemical composition and can be assigned a P-Number when it meets the nominal composition of any one of the P-Number metals.

QW-403.18 A change from one P-Number to any other P-Number or to a base metal not listed in Table QW/QB-422, except as permitted in QW-423, and in QW-420. For tube-to-tubesheet welding: a change in the P-Number or A-Number of the tubesheet cladding material (if the cladding material is part of the weld). (19)

Copyrighted material licensed to Fermi National Laboratory by Clarivate Analytics (US) LLC, subscriptions.techstreet.com, downloaded on 2020-09-23 17:45:20 +0000 by Fermi National Laboratory User.
No further reproduction or distribution is permitted.

QW-403.19 A change to another base material type or grade (type or grade are materials of the same nominal chemical analysis and mechanical property range, even though of different product form), or to any other base material type or grade. When joints are made between two different types or grades of base material, a procedure qualification must be made for the applicable combinations of materials, even though procedure qualification tests have been made for each of the two base materials welded to itself.

(19) **QW-403.20** If the chemical composition of the weld metal overlay is specified in the WPS, a change in the P-Number listed in Table QW/QB-422 to another P-Number or unlisted base metal, or a change in Group Number for P-No. 10 or P-No. 11 base metals.

If the chemical composition of the weld metal overlay is not specified in the WPS, qualification on P-No. 5A or any lower P-Number base metal also qualifies for weld metal overlay on all lower P-Number base metals.

QW-403.21 The addition or deletion of a coating, plating or cladding, or a change in the nominal chemical analysis or thickness range of the plating or cladding, or a change in type of coating as specified in the WPS.

QW-403.22 A change in the base metal thickness exceeding 10% of the thickness of the total joint from that qualified.

QW-403.23 A change in base metal thickness beyond the range qualified in Table QW-453.

QW-403.24 A change in the specification, type, or grade of the base metal. When joints are to be made between two different base metals, a procedure qualification must be made for the applicable combination even though procedure qualifications have been made for each of the two base metals welded to themselves.

QW-403.25 Welding procedure qualifications shall be made using a base metal of the same P-Number and Group Number as the base metal to be temper bead welded. When joints are to be made between base metals from two different P-Number and Group Number combinations, a temper bead procedure qualification must be made for each base metal P-Number and Group Number combination to be used in production; this may be done in separate test coupons or in combination on a single test coupon. When base metals of different P-Number and Group Number combinations are tested in the same coupon, the welding variables utilized and test results on each member of the coupon shall be documented independently but may be reported on the same qualification record. Where temper bead welding is to be applied to only one member of a joint (e.g., on the P-No. 1 member of a joint between P-No. 1 and P-No. 8 metals) or where cladding is being applied or repaired using temper bead techniques, qualification in accordance with QW-290 is required only for the portion of the WPS that applies to welding on the member to be temper bead welded.

QW-403.26 An increase in the base metal carbon equivalent using the following equation:

$$CE = C + \frac{Mn}{6} + \frac{Cr + Mo + V}{5} + \frac{Ni + Cu}{15}$$

QW-403.27 The maximum thickness qualified is the thickness of the test coupon, T, or it is unlimited if the test coupon is $1\frac{1}{2}$ in. (38 mm) thick or thicker. However, where T is $\frac{1}{4}$ in. (6 mm) or less, the maximum thickness qualified is $2T$. This limitation applies to fillet welds as well as to groove welds.

QW-403.28 A change to another base metal type, grade, or UNS number.

QW-403.29 A change in the surface finish as defined by the material specification or established surface roughness range as measured in accordance with ASME B46.1–2006.

QW-403.30 A change in base metal thickness greater than 20%

(a) of the test coupon thickness for fixed-pin and retracting-pin rotating tools

(b) beyond the minimum and maximum thickness or thickness transition slopes of the test coupon for self-reacting rotating tools

QW-403.31 For tubes of specified wall thickness of 0.100 in. (2.5 mm) or less, a change in tube wall thickness to increase it to more than $2T$ or to decrease it to less than $\frac{1}{2}T$. For tubes of specified wall thickness greater than 0.100 in. (2.5 mm), only one qualification test is required. (19)

QW-403.32 A change in the P-Number of either the tube or tubesheet material. Where the cladding or overlay material is part of the weld, a change in the P-Number or A-Number or in the nominal composition of the tubesheet cladding or overlay material when a P-Number or A-Number is not assigned. (19)

QW-403.33 A change in the specified tube wall thickness or diameter greater than 10% for all diameters and wall thicknesses. (19)

QW-404 FILLER METALS

QW-404.1 An increase of greater than 10% in the cross-sectional area of the filler metal added (excluding buttering) or in the wire-feed speed beyond that qualified.

QW-404.2 A decrease in the thickness or change in nominal specified chemical analysis of weld metal buttering beyond that qualified. (Buttering or surfacing is the deposition of weld metal on one or both faces of the joint prior to preparation of the joint for final electron beam welding.)

QW-404.3 A change in the size of the filler metal.

Copyrighted material licensed to Fermi National Laboratory by Clarivate Analytics (US) LLC, subscriptions.techstreet.com, downloaded on 2020-09-23 17:45:20 +0000 by Fermi National Laboratory User.
No further reproduction or distribution is permitted.

QW-404.4 A change from one F-Number in Table QW-432 to any other F-Number or to any other filler metal not listed in Table QW-432.

(19) **QW-404.5** (Applicable only to ferrous metals.) A change in the chemical composition of the weld deposit from one A-Number to any other A-Number in Table QW-442. Qualification with A-No. 1 shall qualify for A-No. 2 and vice versa.

The weld metal chemical composition may be determined by any of the following:

(a) For all welding processes — from the chemical analysis of the weld deposit taken from the procedure qualification test coupon.

(b) For SMAW, GTAW, LBW, and PAW — from the chemical analysis of the weld deposit prepared according to the filler metal specification, or from the chemical composition as reported either in the filler metal specification or the manufacturer's or supplier's certificate of compliance.

(c) For GMAW and EGW — from the chemical analysis of the weld deposit prepared according to the filler metal specification or the manufacturer's or supplier's certificate of compliance when the shielding gas used was the same as that used to weld the procedure qualification test coupon.

(d) For SAW — from the chemical analysis of the weld deposit prepared according to the filler metal specification or the manufacturer's or supplier's certificate of compliance when the flux used was the same as that used to weld the procedure qualification test coupon.

In lieu of an A-Number designation, the nominal chemical composition of the weld deposit shall be indicated on the WPS and on the PQR. Designation of nominal chemical composition may also be by reference to the AWS classification except for the "G" suffix classification, by the manufacturer's trade name, or by other established procurement documents.

QW-404.6 A change in the nominal size of the electrode or electrodes specified in the WPS.

QW-404.7 A change in the nominal diameter of the electrode to over $^1/_4$ in. (6 mm). This variable does not apply when a WPS is qualified with a PWHT above the upper transformation temperature or when an austenitic material is solution annealed after welding.

QW-404.8 Addition or deletion, or a change of more than 10% in the nominal amount or composition of supplementary deoxidation material (in addition to filler metal) beyond that qualified.

QW-404.9

(a) A change in the indicator for minimum tensile strength (e.g., the 7 in F7A2-EM12K) when the flux wire combination is classified in Section II, Part C.

(b) A change in either the flux trade name or wire trade name when neither the flux nor the wire is classified in Section II, Part C.

(c) A change in the flux trade name when the wire is classified in Section II, Part C but the flux is not classified. A change in the wire classification within the requirements of QW-404.5 does not require requalification.

(d) A change in the flux trade name for A-No. 8 deposits.

QW-404.10 Where the alloy content of the weld metal is largely dependent upon the composition of the flux used, any change in any part of the welding procedure which would result in the important alloying elements in the weld metal being outside of the specification range of chemistry given in the Welding Procedure Specification. (19)

QW-404.12 A change in the filler metal classification within an SFA specification, or for a filler metal not covered by an SFA specification or a filler metal with a "G" suffix within an SFA specification, a change in the trade name of the filler metal. (19)

When a filler metal conforms to a filler metal classification, within an SFA specification, except for the "G" suffix classification, requalification is not required if a change is made in any of the following:

(a) from a filler metal that is designated as moisture-resistant to one that is not designated as moisture-resistant and vice versa (i.e., from E7018R to E7018)

(b) from one diffusible hydrogen level to another (i.e., from E7018-H8 to E7018-H16)

(c) for carbon, low alloy, and stainless steel filler metals having the same minimum tensile strength and the same nominal chemical composition, a change from one low hydrogen coating type to another low hydrogen coating type (i.e., a change among EXX15, 16, or 18 or EXXX15, 16, or 17 classifications)

(d) from one position-usability designation to another for flux-cored electrodes (i.e., a change from E70T-1 to E71T-1 or vice versa)

(e) from a classification that requires toughness testing to the same classification which has a suffix which indicates that toughness testing was performed at a lower temperature or exhibited greater toughness at the required temperature or both, as compared to the classification which was used during procedure qualification (i.e., a change from E7018 to E7018-1)

(f) from the classification qualified to another filler metal within the same SFA specification when the weld metal is exempt from toughness testing by other Sections

This exemption does not apply to hard-facing and corrosion-resistant overlays

QW-404.14 The deletion or addition of filler metal.

QW-404.15 A change from one F-Number in Table QW-432 to any other F-Number or to any other filler metal, except as permitted in QW-433.

QW-404.17 A change in the type of flux or composition of the flux.

Copyrighted material licensed to Fermi National Laboratory by Clarivate Analytics (US) LLC, subscriptions.techstreet.com, downloaded on 2020-09-23 17:45:20 +0000 by Fermi National Laboratory User.
No further reproduction or distribution is permitted.

QW-404.18 A change from wire to plate electrodes, and vice versa.

QW-404.19 A change from consumable guide to non-consumable guide, and vice versa.

QW-404.20 Any change in the method by which filler metal is added, such as preplaced shim, top strip, wire, wire feed, or prior weld metal buttering of one or both joint faces.

QW-404.21 For filler metal additions, any change from the nominal specified analysis of the filler metal qualified.

QW-404.22 The omission or addition of consumable inserts. Qualification in a single-welded butt joint, with or without consumable inserts, qualifies for fillet welds and single-welded butt joints with backing or double-welded butt joints. Consumable inserts that conform to SFA-5.30 , except that the chemical analysis of the insert conforms to an analysis for any bare wire given in any SFA specification or AWS Classification, shall be considered as having the same F-Number as that bare wire as given in Table QW-432.

QW-404.23 A change from one of the following filler metal product forms to another:

(a) bare (solid or metal cored)
(b) flux cored
(c) flux coated (solid or metal cored)
(d) powder

QW-404.24 The addition, deletion, or change of more than 10% in the volume of supplemental filler metal.

QW-404.27 Where the alloy content of the weld metal is largely dependent upon the composition of the supplemental filler metal (including powder filler metal for PAW), any change in any part of the welding procedure that would result in the important alloying elements in the weld metal being outside of the specification range of chemistry given in the Welding Procedure Specification.

QW-404.29 A change in the flux trade name and designation.

QW-404.30 A change in deposited weld metal thickness beyond that qualified in accordance with QW-451 for procedure qualification or QW-452 for performance qualification, except as otherwise permitted in QW-303.1 and QW-303.2. When a welder is qualified using volumetric examination, the maximum thickness stated in Table QW-452.1(b) applies.

QW-404.31 The maximum thickness qualified is the thickness of the test coupon.

QW-404.32 For the low voltage short-circuiting type of gas metal-arc process when the deposited weld metal thickness is less than $^1/_2$ in. (13 mm), an increase in deposited weld metal thickness beyond 1.1 times that of the qualification test deposited weld metal thickness. For weld metal thicknesses of $^1/_2$ in. (13 mm) and greater, use Table QW-451.1, Table QW-451.2, or Tables QW-452.1(a) and QW-452.1(b), as applicable.

QW-404.33 A change in the filler metal classification within an SFA specification, or, if not conforming to a filler metal classification within an SFA specification, a change in the manufacturer's trade name for the filler metal. When optional supplemental designators, such as those which indicate moisture resistance (i.e., XXXXR), diffusible hydrogen (i.e., XXXX H16, H8, etc.), and supplemental toughness testing (i.e., XXXX-1 or EXXXXM), are specified on the WPS, only filler metals which conform to the classification with the optional supplemental designator(s) specified on the WPS shall be used.

QW-404.34 A change in flux type (i.e., neutral to active or vice versa) for multilayer deposits in P-No. 1 materials.

QW-404.35 A change in the flux-wire classification or a change in either the electrode or flux trade name when the flux-wire combination is not classified to an SFA specification. Requalification is not required when a flux-wire combination conforms to an SFA specification and the change in classification is

(a) from one diffusible hydrogen level to another (e.g., a change from F7A2-EA1-A1-H4 to F7A2-EA1-A1-H16), or

(b) to a larger number in the indicator for toughness, indicating classification at a lower toughness testing temperature (e.g., a change from F7A2-EM12K to F7A4-EM12K)

This variable does not apply when the weld metal is exempt from toughness testing by other Sections. This exemption does not apply to hard-facing and corrosion-resistant overlays.

QW-404.36 When flux from recrushed slag is used, each batch or blend, as defined in SFA-5.01, shall be tested in accordance with Section II, Part C by either the manufacturer or user, or qualified as an unclassified flux in accordance with QW-404.9.

QW-404.37 A change in the composition of the deposited weld metal from one A-Number in Table QW-442 to any other A-Number, or to an analysis not listed in the table. A change in the UNS number for each AWS classification of A-No. 8 or A-No. 9 analysis of Table QW-442, or each nonferrous alloy in Table QW-432, shall require separate WPS qualification. A-Numbers may be determined in accordance with QW-404.5.

QW-404.38 A change in the nominal electrode diameter used for the first layer of deposit.

QW-404.39 For submerged-arc welding and electroslag welding, a change in the nominal composition or type of flux used. Requalification is not required for a change in flux particle size.

QW-404.41 A change of more than 10% in the powdered metal feed rate recorded on the PQR.

Copyrighted material licensed to Fermi National Laboratory by Clarivate Analytics (US) LLC, subscriptions.techstreet.com, downloaded on 2020-09-23 17:45:20 +0000 by Fermi National Laboratory User.
No further reproduction or distribution is permitted.

QW-404.42 A change of more than 5% in the particle size range of the powder.

QW-404.43 A change in the powdered metal particle size range recorded on the PQR.

QW-404.44 A change from a homogeneous powdered metal to a mechanical mixed powdered metal or vice versa.

QW-404.46 A change in the powder feed rate range qualified.

QW-404.47 A change of more than 10% in the filler metal size and/or powder metal particle size.

QW-404.48 A change of more than 10% in the powder metal density.

QW-404.49 A change of more than 10% in the filler metal or powder metal feed rate.

QW-404.50 The addition or deletion of flux to the face of a weld joint for the purpose of affecting weld penetration.

QW-404.51 The method of control of moisture pick-up during storage and distribution for SMAW and GMAW-FC electrodes and flux for SAW (e.g., purchasing in hermetically sealed containers and storage in heated ovens, controlled distribution time, high-temperature baking prior to use).

QW-404.52 An increase in the diffusible hydrogen designator (e.g., from E7018-H8 to E7018-H16) or to no diffusible hydrogen designator.

QW-404.53 The addition or deletion of filler metal and, when used, a change in the filler metal nominal composition.

QW-404.55 An increase in the thickness or width of preplaced filler metal.

QW-404.56 A change to another type or grade of preplaced filler metal (type or grade are materials of the same nominal chemical analysis and mechanical property range, even though of different product form).

QW-404.57 An increase in the nominal thickness or width of the electrode for strip filler metals used with the SAW and ESW processes for corrosion-resistant and hard-facing weld metal overlay.

(19) **QW-404.58** The addition or deletion of preplaced filler metal.

(19) **QW-404.59** If filler metal is added, a change in the A-Number of the weld deposit or a change in the nominal composition of the deposited weld metal when an A-Number is not assigned.

QW-405 POSITIONS

QW-405.1 The addition of other welding positions than those already qualified. see QW-120, QW-130, QW-203, and QW-303.

QW-405.2 (19)

DELETED

QW-405.3 A change from upward to downward, or from downward to upward, in the progression specified for any pass of a vertical weld, except that the cover or wash pass may be up or down. The root pass may also be run either up or down when the root pass is removed to sound weld metal in the preparation for welding the second side.

QW-405.4 Except as specified below, the addition of other welding positions than already qualified.

(a) Qualification in the horizontal, vertical, or overhead position shall also qualify for the flat position. Qualification in the horizontal fixed position, 5G, shall qualify for the flat, vertical, and overhead positions. Qualification in the horizontal, vertical, and overhead positions shall qualify for all positions. Qualification in the inclined fixed position, 6G, shall qualify for all positions.

(b) An organization who does production welding in a particular orientation may make the tests for procedure qualification in this particular orientation. Such qualifications are valid only for the positions actually tested, except that an angular deviation of ±15 deg is permitted in the inclination of the weld axis and the rotation of the weld face as defined in Figure QW-461.1. A test specimen shall be taken from the test coupon in each special orientation.

(c) For hard-facing and corrosion-resistant weld metal overlay, qualification in the 3G, 5G, or 6G positions, where 5G or 6G pipe coupons include at least one vertical segment completed utilizing the up-hill progression or a 3G plate coupon is completed utilizing the up-hill progression, shall qualify for all positions. Chemical analysis, hardness, macro-etch, and at least two of the bend tests, as required in Table QW-453, shall be removed from the vertical uphill overlaid segment as shown in Figure QW-462.5(b).

(d) A change from the vertical down to vertical up-hill progression shall require requalification.

QW-406 PREHEAT

QW-406.1 A decrease of more than 100°F (55°C) in the preheat temperature qualified. The minimum temperature for welding shall be specified in the WPS.

QW-406.2 A change in the maintenance or reduction of preheat upon completion of welding prior to any required postweld heat treatment.

QW-406.3 An increase of more than 100°F (55°C) in the maximum interpass temperature recorded on the PQR. This variable does not apply when a WPS is qualified

Copyrighted material licensed to Fermi National Laboratory by Clarivate Analytics (US) LLC, subscriptions.techstreet.com, downloaded on 2020-09-23 17:45:20 +0000 by Fermi National Laboratory User.
No further reproduction or distribution is permitted.

with a PWHT above the upper transformation temperature or when an austenitic or P-No. 10H material is solution annealed after welding.

QW-406.4 A decrease of more than 100°F (55°C) in the preheat temperature qualified or an increase in the maximum interpass temperature recorded on the PQR. The minimum temperature for welding shall be specifed in the WPS.

QW-406.5 A change in the maintenance or reduction of preheat upon completion of spraying and prior to fusing.

QW-406.7 A change of more than 10% in the amplitude or number of preheating cycles from that qualified, or if other preheating methods are employed, a change in the preheating temperature of more than 25°F (15°C).

QW-406.9 A decrease in the preheat temperature from that achieved on the test coupon and recorded on the PQR.

QW-406.10 The minimum preheating soaking time prior to the start of welding.

QW-406.11 The addition or deletion of a postweld hydrogen bakeout. When specified, the minimum soaking temperature and time shall be specified.

QW-407 POSTWELD HEAT TREATMENT

QW-407.1 A separate procedure qualification is required for each of the following:

(a) For P-Numbers 1 through 6 and 9 through 15F materials, the following postweld heat treatment conditions apply:

(1) no PWHT

(2) PWHT below the lower transformation temperature

(3) PWHT above the upper transformation temperature (e.g., normalizing)

(4) PWHT above the upper transformation temperature followed by heat treatment below the lower transformation temperature (e.g., normalizing or quenching followed by tempering)

(5) PWHT between the upper and lower transformation temperatures

(b) For all other materials, the following postweld heat treatment conditions apply:

(1) no PWHT

(2) PWHT within a specified temperature range

QW-407.2 A change in the postweld heat treatment (see QW-407.1) temperature and time range

The procedure qualification test shall be subjected to PWHT essentially equivalent to that encountered in the fabrication of production welds, including at least 80% of the aggregate times at temperature(s). The PWHT total time(s) at temperature(s) may be applied in one heating cycle.

QW-407.6 A change in postweld heat treatment condition in QW-407.1 or an increase of 25% or more in total time at postweld heat treating temperature.

QW-407.7 A change in the heat treatment temperature range qualified if heat treatment is applied after fusing.

QW-407.8 A separate PQR is required for each of the following:

(a) no PWHT

(b) a change of more than 10% in the number of PWHT heating current cycles following the welding cycle

(c) PWHT within a specified temperature and time range if heat treatment is performed separately from the welding operation

QW-407.9 A separate procedure qualification is required for each of the following:

(a) For weld corrosion-resistant overlay of A-No. 8 on all base materials, a change in postweld heat treatment condition in QW-407.1, or when the total time at postweld heat treatment encountered in fabrication exceeds 20 hr, an increase of 25% or more in total time at postweld heat treating temperature.

(b) For weld corrosion-resistant overlay of A-No. 9 on all base materials, a change in postweld heat treatment condition in QW-407.1, or an increase of 25% or more in total time at postweld heat treating temperature.

(c) For all other weld corrosion-resistant overlays on all base materials, a change in postweld heat treatment condition in QW-407.1.

QW-407.10 The addition or deletion of PWHT, or a change of ±45°F (±25°C) in PWHT temperature or an increase in the holding time by more than 25% or change in the method of cooling (e.g., furnace, air, quench).

QW-408 GAS

QW-408.1 The addition or deletion of trailing gas and/or a change in its composition.

QW-408.2 A separate procedure qualification is required for each of the following:

(a) a change from a single shielding gas to any other single shielding gas

(b) a change from a single shielding gas to a mixture of shielding gasses, and vice versa

(c) a change in the specified percentage composition of a shielding gas mixture

(d) the addition or omission of shielding gas

The AWS classification of SFA-5.32 may be used to specify the shielding gas composition.

QW-408.3 A change in the specified flow rate range of the shielding gas or mixture of gases.

QW-408.4 A change in the composition of the orifice or shielding gas.

Copyrighted material licensed to Fermi National Laboratory by Clarivate Analytics (US) LLC, subscriptions.techstreet.com, downloaded on 2020-09-23 17:45:20 +0000 by Fermi National Laboratory User.
No further reproduction or distribution is permitted.

QW-408.5 The addition or deletion of backing gas, a change in backing gas composition, or a change in the specified flow rate range of the backing gas.

QW-408.6 A change of environment shielding such as from vacuum to an inert gas, or vice versa.

QW-408.7 A change in the type of fuel gas.

QW-408.8 The omission of backing gas except that requalification is not required when welding a single-welded butt joint with a backing strip or a double-welded butt joint or a fillet weld. This exception does not apply to P-No. 51 through P-No. 53, P-No. 61 through P-No. 62, and P-No. 10I metals.

QW-408.9 For groove welds in P-No. 41 through P-No. 49 and all welds of P-No. 10I, P-No. 10J, P-No. 10K, P-No. 51 through P-No. 53, and P-No. 61 through P-No. 62 metals, the deletion of backing gas or a change in the nominal composition of the backing gas from an inert gas to a mixture including non-inert gas(es).

QW-408.10 For P-No. 10I, P-No. 10J, P-No. 10K, P-No. 51 through P-No. 53, and P-No. 61 through P-No. 62 metals, the deletion of trailing gas, or a change in the nominal composition of the trailing gas from an inert gas to a mixture including non-inert gas(es), or a decrease of 10% or more in the trailing gas flow rate.

QW-408.11 The addition or deletion of one or more of the following:

(a) shielding gas
(b) trailing gas
(c) backing gas
(d) plasma-removing gas

QW-408.12 A decrease of more than 10% in the flow rate of one or more of the following: shielding gas, trailing gas, backing gas, and plasma-removing gas.

QW-408.14 A change in the oxygen or fuel gas pressure beyond the range qualified.

QW-408.16 A change of more than 5% in the flow rate of the plasma-arc gas or powdered metal feed gas recorded on the PQR.

QW-408.17 A change in the plasma-arc gas, shielding gas, or powdered metal feed gas from a single gas to any other single gas, or to a mixture of gases, or vice versa.

QW-408.18 A change of more than 10% in the gas mixture composition of the plasma-arc gas, shielding gas, or powdered metal feed gas recorded on the PQR.

QW-408.19 A change in the nominal composition of the powder feed gas or (plasma-arc spray) plasma gas qualified.

QW-408.20 A change of more than 5% in the plasma gas flow rate range qualified.

QW-408.21 A change in the flow rate of the orifice or shielding gas.

QW-408.22 A change in the shielding gas type, gas pressure, or purging time.

QW-408.23 For titanium, zirconium, and their alloys, the deletion of one or more of the following:

(a) shielding gas
(b) trailing gas
(c) backing gas

QW-408.24 For gas-shielded processes, the maximum moisture content (dew point) of the shielding gas. Moisture control may be by specification of shielding gas classifications in SFA-5.32.

QW-408.25 A change in the furnace atmosphere from that qualified.

QW-408.26 For friction stir welding of P-No. 6, P-No. 7, P-No. 8, P-No. 10H, P-No. 10I, P-No. 41 through P-No. 47, P-No. 51 through P-No. 53, and P-No. 61 through P-No. 62, the addition or deletion of trailing or tool shielding gas, or a change in gas composition or flow rate.

QW-409 ELECTRICAL CHARACTERISTICS

QW-409.1 An increase in heat input, or an increase in volume of weld metal deposited per unit length of weld, for each process recorded on the PQR. For arc welding, the increase shall be determined by (a), (b), or (c) for non-waveform controlled welding, or by (b) or (c) for waveform controlled welding. See Nonmandatory Appendix H. For low-power density laser beam welding (LLBW), the increase shall be determined by (d).

(a) Heat input [J/in. (J/mm)]

$$= \frac{\text{Voltage} \times \text{Amperage} \times 60}{\text{Travel Speed}\left[\text{in/min}\left(\text{mm/min}\right)\right]}$$

(b) Volume of weld metal measured by

(1) an increase in bead size (width × thickness), or

(2) a decrease in length of weld bead per unit length of electrode

(c) Heat input determined using instantaneous energy or power by

(1) for instantaneous energy measurements in joules (J) *Heat input [J/in. (J/mm)]*

$$= \frac{\text{Energy}\left(J\right)}{\text{Weld Bead Length}\left[\text{in. (mm)}\right]}$$

(2) for instantaneous power measurements in joules per second (J/s) or Watts (W) *Heat input [J/in. (J/mm)]*

$$= \frac{\text{Power}\left(\text{J/s or W}\right) \times \text{arc time}\left(\text{s}\right)}{\text{Weld Bead Length}\left[\text{in. (mm)}\right]}$$

(d) LLBW Heat input [J/in. (J/mm)]

$$= \frac{\text{Power}\left(W\right) \times 60}{\text{Travel Speed [in./min (mm/min)]}}$$

Copyrighted material licensed to Fermi National Laboratory by Clarivate Analytics (US) LLC, subscriptions.techstreet.com, downloaded on 2020-09-23 17:45:20 +0000 by Fermi National Laboratory User.
No further reproduction or distribution is permitted.

where Power is the power delivered to the work surface as measured by calorimeter or other suitable methods.

The requirement for measuring the heat input or volume of deposited weld metal does not apply when the WPS is qualified with a PWHT above the upper transformation temperature or when an austenitic or P-No. 10H material is solution annealed after welding.

QW-409.2 A change from globular, spray or pulsed spray transfer welding to short-circuiting transfer welding or vice versa.

QW-409.3 The addition or deletion of pulsing current to dc power source.

QW-409.4 A change from AC to DC, or vice versa; and in DC welding, a change from electrode negative (straight polarity) to electrode positive (reverse polarity), or vice versa.

QW-409.5 A change of ±15% in the amperage or voltage range.

QW-409.6 A change in the beam current of more than ±5%, voltage of more than ±2%, welding speed of more than ±2%, beam focus current of more than ±5%, gun-to-work distance of more than ±5%, or a change in oscillation length or width of more than ±20%.

QW-409.7 Any change in the beam pulsing frequency duration.

QW-409.8 A change in the range of amperage, or except for SMAW, GTAW, or waveform controlled welding, a change in the range of voltage. A change in the range of electrode wire feed speed may be used as an alternative to amperage. See Nonmandatory Appendix H:

QW-409.9 A change in the arc timing of more than $\pm 1/10$ sec.

QW-409.10 A change in amperage of more than ±10%.

QW-409.11 A change in the power source from one model to another.

QW-409.12 A change in type or size of tungsten electrode.

QW-409.13 A change from one Resistance Welding Manufacturer's Association (RWMA) electrode class to another. In addition, a change in the following:

(a) for spot and projection welding, a change in the nominal shape or more than 10% of the contact area of the welding electrode

(b) for seam welding, a change of thickness, profile, orientation, or diameter of electrodes exceeding 10%

QW-409.14 Addition or deletion of upslope or downslope current control, or a change of more than 10% in the slope current time or amplitude.

QW-409.15

(a) A change of more than 5% in any of the following:

(1) preheating current

(2) preheating current amplitude

(3) preheating current time duration

(4) electrode pressure

(5) welding current

(6) welding current time duration

(b) A change from AC to DC or vice versa.

(c) The addition or deletion of pulsing current to a DC power source.

(d) When using pulsing DC current, a change of more than 5% in the pulse amplitude, frequency, or number of pulses per cycle.

(e) A change of more than 5% in the post-heating current time duration.

QW-409.17 A change in the power supply primary voltage or frequency, or in the transformer turns ratio, tap setting, choke position, secondary open circuit voltage or phase control setting.

QW-409.18 A change in the procedure or frequency of tip cleaning.

QW-409.19 Any change of more than ±10% in the beam pulsing frequency and pulse duration.

QW-409.20 Any change in the following variables: mode of operation (from pulsed to continuous and vice versa), energy distribution across the beam (i.e., multimode or gaussian).

QW-409.21 A decrease of more than 10% in the power delivered to the work surface as measured by calorimeter or other suitable methods.

QW-409.22 An increase of more than 10% in the amperage used in application for the first layer.

QW-409.23 A change of more than 10% in the ranges of amperage or voltage.

QW-409.24 A change of more than 10% in the filler wire wattage recorded on the PQR. Wattage is a function of current voltage, and stickout dimension.

QW-409.25 A change of more than 10% in the plasma-arc current or voltage recorded on the PQR.

QW-409.26 For the first layer only, an increase in heat input of more than 10% or an increase in volume of weld metal deposited per unit length of weld of more than 10%. The increase shall be determined by the methods of QW-409.1.

When using strip filler metal, the heat input shall be calculated as follows:

$$\text{Heat Input } [\text{J/in.}^2\ (\text{J/mm}^2)] = \frac{\text{Voltage} \times \text{Amperage} \times 60}{\text{Travel Speed}\left[\text{in./min}\left(\text{mm/min}\right)\right] \times \text{Strip Width}\left[\text{in.}\left(\text{mm}\right)\right]}$$

QW-409.27 A change in the flashing time of more than 10%.

QW-409.28 A change in the upset current time by more than 10%.

Copyrighted material licensed to Fermi National Laboratory by Clarivate Analytics (US) LLC, subscriptions.techstreet.com, downloaded on 2020-09-23 17:45:20 +0000 by Fermi National Laboratory User.
No further reproduction or distribution is permitted.

QW-409.29

(a) A change in heat input beyond the following (see Figure QW-462.12):

(1) An increase or decrease in the ratio of heat input between the first tempering bead layer and the weld beads deposited against the base metal of more than 20% for P-No. 1 and P-No. 3 metals and 10% for all other P-Number metals.

(2) An increase or decrease in the ratio of heat input between the second tempering bead layer and the first tempering bead layer of more than 20% for P-No. 1 and P-No. 3 metals and 10% for all other P-Number metals.

(3) The ratio of heat input between subsequent layers shall be maintained until a minimum of $^{3}/_{16}$ in. (5 mm) of weld metal has been deposited over the base metal.

(4) Where the basis for acceptance is toughness testing and the filler metal is exempt from temper bead qualification, the heat input may not exceed 50% above the heat input qualified for the remaining fill passes.

(5) Where the basis for acceptance is hardness testing, a decrease of more than 20% in heat input for the remainder of the fill passes.

(b) Heat input shall be determined using the following methods:

(1) For machine or automatic GTAW or PAW, an increase or decrease of 10% in the power ratio measured as:

$$\text{Power Ratio} = \frac{\text{Amperage} \times \text{Voltage}}{\left[\left(\text{WFS} / \text{TS}\right) \times A_f\right]}$$

where

A_f = the cross-section area of the filler metal wire
TS = the welding travel speed
WFS = the filler metal wire feed speed

(2) For processes other than machine or automatic GTAW or PAW, heat input shall be determined by the method of QW-409.1.

(3) If manual GTAW or PAW is used for making in-process repairs in accordance with QW-290.5, a record of bead size shall be made.

QW-410 TECHNIQUE

QW-410.1 For manual or semiautomatic welding, a change from the stringer bead technique to the weave bead technique, or vice versa.

QW-410.2 A change in the nature of the flame, oxidizing to reducing, or vice versa.

QW-410.3 A change in the orifice, cup, or nozzle size.

QW-410.4 A change in the welding technique, forehand to backhand, or vice versa.

QW-410.5 A change in the method of initial and interpass cleaning (brushing, grinding, etc.).

QW-410.6 A change in the method of back gouging.

QW-410.7 For the machine or automatic welding process, a change of more than ±10% in width, frequency, or dwell time of oscillation technique.

QW-410.8 A change in the contact tube to work distance.

QW-410.9 A change from multipass per side to single pass per side. This variable does not apply when a WPS is qualified with a PWHT above the upper transformation temperature or when an austenitic or P-No. 10H material is solution annealed after welding.

QW-410.10 A change from single electrode to multiple electrode, or vice versa, for machine or automatic welding only. This variable does not apply when a WPS is qualified with a PWHT above the upper transformation temperature or when an austenitic or P-No. 10H material is solution annealed after welding.

QW-410.11 A change from closed chamber to out-of-chamber conventional torch welding in P-No. 51 through P-No. 53 metals, but not vice versa.

QW-410.12 A change from the melt-in technique to the keyhole technique of welding, or vice versa, or the inclusion of both techniques though each has been individually qualified.

QW-410.14 A change of more than ±10 deg in the relative angle between the axis of the beam and the workpiece. (**19**)

QW-410.15 A change in the spacing of multiple electrodes for machine or automatic welding.

QW-410.17 A change in the type or model of the welding equipment.

QW-410.18 An increase in the absolute pressure of the vacuum welding environment beyond that qualified.

QW-410.19 Any change in filament type, size, or shape.

QW-410.20 The addition of a wash pass.

QW-410.21 For full penetration groove welds, a change of welding from both sides to welding from one side only, but not vice versa.

QW-410.22 A change in either of the following stud welding parameters: a change of stud gun model; a change in the lift more than $\pm^{1}/_{32}$ in. (0.8 mm).

QW-410.25 A change from manual or semiautomatic to machine or automatic welding and vice versa.

QW-410.26 The addition or deletion of peening.

QW-410.27 A change in the rotational speed producing a change in the outside surface velocity [ft/min (m/min)] greater than ±10% of the outside surface velocity qualified.

Copyrighted material licensed to Fermi National Laboratory by Clarivate Analytics (US) LLC, subscriptions.techstreet.com, downloaded on 2020-09-23 17:45:20 +0000 by Fermi National Laboratory User.
No further reproduction or distribution is permitted.

QW-410.28 A change in the thrust load greater than ±10% of the thrust load qualified.

QW-410.29 A change in the rotational energy greater than ±10% of the rotational energy qualified.

QW-410.30 Any change in upset dimension (overall loss in length of parts being joined) greater than ±10% of the upset qualified.

QW-410.31 A change in the method of preparing the base metal prior to welding (e.g., changing from mechanical cleaning to chemical cleaning or to abrasive cleaning, or vice versa).

QW-410.32 A change of more than 10% in the holding (forging) pressure prior to or after welding. A change of more than 10% in the electrode holding time (electrode duration sequence).

QW-410.33 A change from one welding type to another, or modification of equipment, including Manufacturer, control panel, model number, electrical rating or capacity, type of electrical energy source, or method of applying pressure.

QW-410.34 Addition or deletion of an electrode cooling medium and where it is used.

QW-410.35 A change in the distance between arms or a change in the throat depth.

QW-410.37 A change from single to multiple pass or vice versa.

QW-410.38 A change from multiple-layer to single layer cladding/hardsurfacing, or vice versa.

QW-410.39 A change in the torch type or tip size.

QW-410.40 For submerged-arc welding and electroslag welding, the deletion of a supplementary device for controlling the magnetic field acting on the weld puddle.

QW-410.41 A change of more than 15% in the travel speed range recorded on the PQR.

QW-410.43 For the torch or workpiece, a change of more than 10% in the travel speed range qualified.

QW-410.44 A change of more than 15% in the spray-torch to workpiece distance qualified.

QW-410.45 A change in the method of surface preparation of the base metal to be hard-faced (example: sandblasting versus chemical cleaning).

QW-410.46 A change in the spray-torch model or tip orifice size.

QW-410.47 A change of more than 10% in the fusing temperature range qualified. A change in the rate of cooling from the fusing temperature of more than 50°F/hr (28°C/hr), a change in the fusing method (e.g., torch, furnace, induction).

QW-410.48 A change in the constricted arc from transferable to nontransferable or vice versa.

QW-410.49 A change in the diameter of the plasma torch-arc constricting orifice.

QW-410.50 A change in the number of electrodes acting on the same welding puddle.

QW-410.52 A change in the method of delivering the filler metal to the molten pool, such as from the leading or trailing edge of the torch, the sides of the torch, or through the torch.

QW-410.53 A change of more than 20% in the center-to-center weld bead distance.

QW-410.54 A change in the upset length or force of more than 10%.

QW-410.55 A change in the distance between the clamping dies of more than 10% or a change in the surface preparation of the clamping area.

QW-410.56 A change in the clamping force by more than 10%.

QW-410.57 A change in more than 10% of the forward or reverse speed.

QW-410.58 The deletion of surface temper beads (see Figure QW-462.12) or a change from surface temper beads that cover the weld surface to beads that are only deposited along the toes of the weld.

QW-410.59 A change from machine or automatic welding to manual or semiautomatic welding.

QW-410.60 The addition of thermal methods to prepare the surface to be welded unless the WPS requires that the metal be ground to bright metal before welding.

QW-410.61 The distance, S, from the toe of the weld to the edge of any tempering bead shall be limited to the distance measured on the test coupon $\pm 1/16$ in. (±1.5 mm) (see Figure QW-462.12). Alternatively, a range for S may be established by locating temper beads at various distances from the toe of the weld followed by hardness traverses or toughness testing, as applicable. Temper reinforcing beads shall not be permitted to touch the toe of the weld. In addition, the ratios of heat input described in QW-409.29 shall apply to temper beads.

QW-410.62 The method of removal of surface temper bead reinforcing layer when it will be removed, including provisions to prevent overheating of the weld surface.

QW-410.63 For weld beads against the base metal and for each tempering bead layer, the range of bead width, b, relative to overlap of the previous bead width, a, as shown in Figure QW-462.13, shall be specified on the WPS. Overlap between 25% and 75% does not require qualification.

(a) Overlap greater than 75% shall be qualified by welding a test coupon using the desired overlap. The overlap qualified shall be the maximum overlap permitted and the minimum overlap shall be 50%.

Copyrighted material licensed to Fermi National Laboratory by Clarivate Analytics (US) LLC, subscriptions.techstreet.com, downloaded on 2020-09-23 17:45:20 +0000 by Fermi National Laboratory User.
No further reproduction or distribution is permitted.

(b) Overlap less than 25% shall be qualified by welding a test coupon using the desired overlap. The overlap qualified shall be the minimum overlap permitted and the maximum overlap shall be 50%.

QW-410.64 For vessels or parts of vessels constructed with P-No. 11A and P-No. 11B base metals, weld grooves for thicknesses less than $^5/_8$ in. (16 mm) shall be prepared by thermal processes when such processes are to be employed during fabrication. This groove preparation shall also include back gouging, back grooving, or removal of unsound weld metal by thermal processes when these processes are to be employed during fabrication.

QW-410.65 The addition or deletion of grinding beyond that required to clean the surface or remove minor surface flaws (i.e., use or nonuse of half-bead technique or similar technique).

QW-410.66 A change of more than ±10% in the travel speed, the ratio of the beam diameter to focal length, or the lens to work distance.

QW-410.67 A change in the optical technique used to focus the welding energy from that qualified.

QW-410.68 A change in welding equipment type (e.g., YAG, TAG, etc.).

QW-410.70 A change in the method of preparing the base metal surface prior to insertion into the furnace.

QW-410.71 A decrease in the percentage of block compression (original stack height compared to height after welding) from that of the test coupon.

QW-410.72 A decrease in the welding temperature or time from that used on the procedure qualification test coupon.

QW-410.73 A change in joint restraint fixtures from that qualified (e.g., fixed anvil to self-reacting, and vice versa) or from single-sided to two-sided welding, and vice versa.

QW-410.74 A change in the welding control method from that qualified (e.g., force control method to position control method, or vice versa, in the plunge direction; and force control method to travel control method, or vice versa, in the travel direction).

QW-410.75 A change in the rotating tool

(a) type or design from the qualified "family" to another (i.e., threaded pin, smooth pin, fluted, self-reacting, retracting-pin, or other tool types)

(b) configuration or dimensions from that qualified beyond the following limits (as applicable):

(1) shoulder diameter greater than 10%

(2) shoulder scroll pitch greater than 10%

(3) shoulder profile (e.g., addition or deletion of shoulder feature)

(4) pin diameter greater than 5%

(5) pin length greater than the lesser of 5% of qualified pin length or 1% of base metal thickness (not minimum pin length for retracting-pin tools, and not applicable for self-reacting rotating tools)

(6) pin taper angle greater than 5 deg

(7) flute pitch greater than 5%

(8) pin tip geometry or shape

(9) thread pitch greater than 10% (as applicable)

(10) flat design resulting in a change of the total flat surface area greater than 20%

(11) number of flats

(12) cooling characteristics of the rotating pin (e.g., change from water-cooled to air-cooled, and vice versa)

(c) pin material specification, nominal chemical composition, and minimum hardness

QW-410.76 A change in the rotating tool operation from that qualified beyond the following limits (as applicable):

(a) decrease in rotation speed, or increase greater than 10%

(b) direction of rotation

(c) plunge force greater than 10% or plunge position set point greater than 5% when controlling the plunge direction (except during ramp-up and ramp-down when starting and stopping)

(d) angular tilt greater than 1 deg in any direction

(e) travel force or travel speed greater than 10% when controlling travel direction (except during ramp-up and ramp-down when starting and stopping)

(f) range of relative motion between tool components when using self-reacting or retractable-pin tools

(g) reduction in the smallest radius of travel path curvature that results in reversing the travel direction of the pin or the shoulder

(h) manner or angle of intersection, or number of coincident intersections, within the same weld or between the weld and the HAZ of other welds

QW-410.77 A change in the laser wavelength (e.g., CO_2, Nd:YAG, fiber, disk, diode) from that qualified.

QW-410.80 A change of ±5% in the diameter of the focused spot size.

QW-410.81 The addition of tube expansion prior to welding. (**19**)

QW-410.82 A change in the method of pressure application. (**19**)

QW-410.83 A change in the type of explosive or a change in the energy content greater than ±10%. (**19**)

QW-410.84 A change in the distance between the explosive charge and the tubesheet face greater than ±10%. (**19**)

QW-410.85 A change in the specified clearance between the tube and the tubesheet greater than ±10%. (**19**)

Copyrighted material licensed to Fermi National Laboratory by Clarivate Analytics (US) LLC, subscriptions.techstreet.com, downloaded on 2020-09-23 17:45:20 +0000 by Fermi National Laboratory User.
No further reproduction or distribution is permitted.

Table QW-416
Welding Variables
Welder Performance

Paragraph [Note (1)]		Brief of Variables	Essential					
			OFW Table QW-352	SMAW Table QW-353	SAW Table QW-354	GMAW [Note (2)] Table QW-355	GTAW Table QW-356	PAW Table QW-357
QW-402 Joints	.4	− Backing		X		X	X	X
	.7	+ Backing	X					
QW-403 Base Metal	.2	Maximum qualified	X					
	.16	ϕ Pipe diameter		X	X	X	X	X
	.18	ϕ P-Number	X	X	X	X	X	X
QW-404 Filler Metals	.14	± Filler	X				X	X
	.15	ϕ F-Number	X	X	X	X	X	X
	.22	± Inserts					X	X
	.23	ϕ Filler metal product form					X	X
	.30	ϕ *t* Weld deposit		X	X	X	X	X
	.31	ϕ *t* Weld deposit	X					
	.32	*t* Limit (s. cir. arc)				X		
QW-405 Positions	.1	+ Position	X	X	X	X	X	X
	.3	ϕ ↑↓ Vert. welding		X		X	X	X
QW-408 Gas	.7	ϕ Type fuel gas	X					
	.8	− Inert backing				X	X	X
QW-409 Electrical	.2	ϕ Transfer mode				X		
	.4	ϕ Current or polarity					X	

Welding Processes:

OFW	Oxyfuel gas welding
SMAW	Shielded metal-arc welding
SAW	Submerged-arc welding
GMAW	Gas metal-arc welding
GTAW	Gas tungsten-arc welding
PAW	Plasma-arc welding

Legend:

ϕ	Change	*t*	Thickness
+	Addition	↑	Uphill
−	Deletion	↓	Downhill

NOTES:
(1) For description, see Article IV.
(2) Flux-cored arc welding as shown in Table QW-355, with or without additional shielding from an externally supplied gas or gas mixture, is included.

Copyrighted material licensed to Fermi National Laboratory by Clarivate Analytics (US) LLC, subscriptions.techstreet.com, downloaded on 2020-09-23 17:45:20 +0000 by Fermi National Laboratory User.
No further reproduction or distribution is permitted.

(19) QW-420 BASE METAL GROUPINGS

P-Numbers are assigned to base metals for the purpose of reducing the number of welding and brazing procedure qualifications required.

P-Numbers are alphanumeric designations: accordingly, each P-Number shall be considered a separate P-Number (e.g., base metals assigned P-No. 5A are considered a separate P-Number from those assigned P-No. 5B or P-No. 5C).

In addition, ferrous base metals have been assigned Group Numbers creating subsets of P-Numbers that are used when WPSs are required to be qualified by toughness testing by other Sections or Codes. These assignments are based essentially on comparable base metal characteristics, such as composition, weldability, brazeability, and mechanical properties, where this can logically be done. These assignments do not imply that base metals may be indiscriminately substituted for a base metal that was used in the qualification test without consideration of compatibility from the standpoint of metallurgical properties, postweld heat treatment, design, mechanical properties, and service requirements. The following table shows the assignment groups for various alloy systems:

Base Metal	Welding	Brazing
Steel and steel alloys	P-No. 1 through P-No. 15F	P-No. 101 through P-No. 103
Aluminum and aluminum-base alloys	P-No. 21 through P-No. 26	P-No. 104 and P-No. 105
Copper and copper-base alloys	P-No. 31 through P-No. 35	P-No. 107 and P-No. 108
Nickel and nickel-base alloys	P-No. 41 through P-No. 49	P-No. 110 through P-No. 112
Titanium and titanium- base alloys	P-No. 51 through P-No. 53	P-No. 115
Zirconium and zirconium-base alloys	P-No. 61 and P-No. 62	P-No. 117

The values given in the column heading "Minimum Specified Tensile" of Table QW/QB-422 are the acceptance values for the tensile tests of the welding or brazing procedure qualification, except as otherwise allowed in QW-153 or QB-153. Only base metals listed in Table QW/QB-422 with minimum tensile strength values may be used for procedure qualification except as modified by the following paragraph.

If an unlisted base metal has the same UNS number designation as a base metal listed in Table QW/QB-422, that base metal is also assigned that P-Number or P-Number plus Group Number. If the unlisted base metal is used for procedure qualification, the minimum tensile value of the listed base metal shall apply for the tension test specimens.

Materials listed in Table QW/QB-422 without a minimum specified tensile value shall not be used for the purpose of groove weld procedure qualification.

Material produced under an ASTM specification shall have the same P-Number or P-Number plus Group Number and minimum specified tensile strength value as that of the corresponding ASME specification listed in Table QW/QB-422 with prefix A/SA- or B/SB- (e.g., listed under A/SA-240, SA-240 Type 304 is assigned P-No. 8, Group No. 1; and A240 Type 304 is also P-No. 8, Group No. 1).

Material produced to material specifications other than ASTM specifications that have been adopted by ASME for use in the ASME Boiler and Pressure Vessel Code is provided the prefix SA or SB (e.g., SA/GB 713 Grade Q345R), and P-Numbers are assigned per Table QW/QB-422. Material produced to the source material specification (e.g., GB 713 Grade Q345R) is unassigned unless separately classified in Table QW/QB-422.

The column "AWS B2.2 BM" in Table QW/QB-422 is a listing of the assignments of materials in accordance with the brazing grouping criteria of AWS B2.2/B2.2M:2010, *Specification for Brazing Procedure and Performance Qualification*. The assignment and use of either P-Numbers, BM-Numbers, or both are permitted for brazing procedure and performance qualifications, and brazing procedure specifications.

The column "ISO/TR 15608 Group" in Table QW/QB-422 is a listing of the assignments of materials in accordance with the grouping criteria of ISO/TR 15608:2005, *Welding — Guidelines for a metallic materials grouping system*, and it is consistent with the assignments found in ISO/TR 20173:2008, *Grouping systems for materials — American materials*. While this listing is provided as a convenience to users worldwide, it is provided for information only. Section IX does not refer to this grouping as a basis for establishing the range of base metals qualified for either procedure or performance qualification.

In 2009, S-Numbers were removed from Table QW/QB-422. S-Numbers were assigned to materials that were acceptable for use by the ASME B31 Code for Pressure Piping, or by selected Boiler and Pressure Vessel Code Cases, but which were not included within ASME Boiler and Pressure Vessel Code Material Specifications (Section II). Base metals previously assigned S-Numbers were reassigned the corresponding P-Numbers or P-Numbers plus Group Numbers.

Copyrighted material licensed to Fermi National Laboratory by Clarivate Analytics (US) LLC, subscriptions.techstreet.com, downloaded on 2020-09-23 17:45:20 +0000 by Fermi National Laboratory User.
No further reproduction or distribution is permitted.

There are instances where materials assigned to one P- or S-Number or Group Number have been reassigned to a different P- or S-Number or Group Number in later editions. Procedure and performance qualifications that were qualified under the previous P- or S-Numbers or Group Number assignment may continue to be used under the new P-Number or Group Number assignment, see QW-200.2(c), provided the WPS is revised to limit the materials qualified for welding to those assigned to the new P- or S-number(s) and Group number(s) for the specific material(s) originally used for the procedure qualification test coupon. Other materials from the original P- or S-Number and Group Number must be reassigned to the same P- or S-Number or Group Number to be considered qualified for welding under the revised WPS.

Copyrighted material licensed to Fermi National Laboratory by Clarivate Analytics (US) LLC, subscriptions.techstreet.com, downloaded on 2020-09-23 17:45:20 +0000 by Fermi National Laboratory User.
No further reproduction or distribution is permitted.

(19)

Table QW/QB-422
Ferrous and Nonferrous P-Numbers
Grouping of Base Metals for Qualification

Spec. No.	Designation, Type, or Grade	UNS No.	Minimum Specified Tensile, ksi (MPa)	Welding P-No.	Welding Group No.	Brazing P-No.	Brazing AWS B2.2 BM	ISO 15608 Group	Nominal Composition	Typical Product Form
						Ferrous				
A/SA–36	...	...	58 (400)	1	1	101	100	11.1	C–Mn–Si	Plate, bar & shapes
A/SA–53	E, A	K02504	48 (330)	1	1	101	100	1.1	C	Resistance welded pipe
A/SA–53	S, A	K02504	48 (330)	1	1	101	100	1.1	C	Smls. pipe
A/SA–53	E, B	K03005	60 (415)	1	1	101	100	11.1	C–Mn	Resistance welded pipe
A/SA–53	F	K03005	48 (330)	1	1	101	100	11.1	C	Furnace welded pipe
A/SA–53	S, B	K03005	60 (415)	1	1	101	100	11.1	C–Mn	Smls. pipe
A/SA–105	...	K03504	70 (485)	1	2	101	100	11.1	C	Flanges & fittings
A/SA–106	A	K02501	48 (330)	1	1	101	100	1.1	C–Si	Smls. pipe
A/SA–106	B	K03006	60 (415)	1	1	101	100	11.1	C–Mn–Si	Smls. pipe
A/SA–106	C	K03501	70 (485)	1	2	101	100	11.1	C–Mn–Si	Smls. pipe
A108	1015	G10150	...	1	1	101	100	1.1	C	Bar
A108	1018	G10180	...	1	1	101	100	1.1	C	Bar
A108	1020	G10200	...	1	1	101	100	1.1	C	Bar
A108	8620	G86200	...	3	3	102	100	4.1	0.5Ni–0.5Cr–Mo	Bar
A/SA–134	SA283 A	K01400	45 (310)	1	1	101	100	1.1	C	Welded pipe
A/SA–134	SA285 A	K01700	45 (310)	1	1	101	100	1.1	C	Welded pipe
A/SA–134	SA283 B	K01702	50 (345)	1	1	101	100	1.1	C	Welded pipe
A/SA–134	SA285 B	K02200	50 (345)	1	1	101	100	1.1	C	Welded pipe
A/SA–134	SA283 C	K02401	55 (380)	1	1	101	100	1.1	C	Welded pipe
A/SA–134	SA283 D	K02702	60 (415)	1	1	101	100	11.1	C	Welded pipe
A/SA–134	SA285 C	K02801	55 (380)	1	1	101	100	11.1	C	Welded pipe
A/SA–135	A	K02509	48 (330)	1	1	101	100	1.1	C	E.R.W. pipe
A/SA–135	B	K03018	60 (415)	1	1	101	100	11.1	C	E.R.W. pipe
A139	A	K02508	48 (330)	1	1	101	100	1.1	C	Welded pipe
A139	B	K03003	60 (415)	1	1	101	100	11.1	C	Welded pipe
A139	C	K03004	60 (415)	1	1	101	100	11.1	C	Welded pipe
A139	D	K03010	60 (415)	1	1	101	100	11.1	C	Welded pipe
A139	E	K03012	66 (455)	1	1	101	100	11.1	C	Welded pipe
A167	302B	S30215	75 (515)	8	1	102	130	8.1	18Cr–8Ni–2Si	Plate, sheet & strip
A167	308	S30800	75 (515)	8	2	102	130	8.2	20Cr–10Ni	Plate, sheet & strip
A167	309	S30900	75 (515)	8	2	102	130	8.2	23Cr–12Ni	Plate, sheet & strip
A167	310	S31000	75 (515)	8	2	102	130	8.2	25Cr–20Ni	Plate, sheet & strip

Copyrighted material licensed to Fermi National Laboratory by Clarivate Analytics (US) LLC, subscriptions.techstreet.com, downloaded on 2020-09-23 17:45:20 +0000 by Fermi National Laboratory User.
No further reproduction or distribution is permitted.

Table QW/QB-422
Ferrous and Nonferrous P-Numbers
Grouping of Base Metals for Qualification (Cont'd)

Spec. No.	Designation, Type, or Grade	UNS No.	Minimum Specified Tensile, ksi (MPa)	Welding P-No.	Welding Group No.	Brazing P-No.	Brazing AWS B2.2 BM	ISO 15608 Group	Nominal Composition	Typical Product Form
Ferrous (Cont'd)										
A/SA–178	A	K01200	47 (325)	1	1	101	100	1.1	C	E.R.W. tube
A/SA–178	D	K02709	70 (485)	1	2	101	100	11.1	C–Mn–Si	E.R.W. tube
A/SA–178	C	K03503	60 (415)	1	1	101	100	11.1	C	E.R.W. tube
A/SA–179	...	K01200	47 (325)	1	1	101	100	1.1	C	Smls. tube
A/SA–181	Cl. 60	K03502	60 (415)	1	1	101	100	11.1	C–Si	Pipe flange & fittings
A/SA–181	Cl. 70	K03502	70 (485)	1	2	101	100	11.1	C–Si	Pipe flange & fittings
A/SA–182	F12, Cl. 1	K11562	60 (415)	4	1	102	110	5.1	1Cr–0.5Mo	Forgings
A/SA–182	F12, Cl. 2	K11564	70 (485)	4	1	102	110	5.1	1Cr–0.5Mo	Forgings
A/SA–182	F11, Cl. 2	K11572	70 (485)	4	1	102	110	5.1	1.25Cr–0.5Mo–Si	Forgings
A/SA–182	F11, Cl. 3	K11572	75 (515)	4	1	102	110	5.1	1.25Cr–0.5Mo–Si	Forgings
A/SA–182	F11, Cl. 1	K11597	60 (415)	4	1	102	110	5.1	1.25Cr–0.5Mo–Si	Forgings
A/SA–182	F2	K12122	70 (485)	3	2	101	100	4.2	0.5Cr–0.5Mo	Forgings
A/SA–182	F1	K12822	70 (485)	3	2	101	100	1.1	C–0.5Mo	Forgings
A/SA–182	F22, Cl. 1	K21590	60 (415)	5A	1	102	110	5.2	2.25Cr–1Mo	Forgings
A/SA–182	F22, Cl. 3	K21590	75 (515)	5A	1	102	110	5.2	2.25Cr–1Mo	Forgings
A/SA–182	FR	K22035	63 (435)	9A	1	101	100	9.1	2Ni–1Cu	Forgings
A/SA–182	F3VCb	K31390	85 (585)	5C	1	102	110	6.2	3Cr–1Mo–0.25V–Cb–Ca	Forgings
A/SA–182	F21	K31545	75 (515)	5A	1	102	110	5.2	3Cr–1Mo	Forgings
A/SA–182	F3V	K31830	85 (585)	5C	1	102	120	6.2	3Cr–1Mo–V–Ti–B	Forgings
A/SA–182	F22V	K31835	85 (585)	5C	1	102	110	6.2	2.25Cr–1Mo–V	Forgings
A/SA–182	F5	K41545	70 (485)	5B	1	102	110	5.3	5Cr–0.5Mo	Forgings
A/SA–182	F5a	K42544	90 (620)	5B	1	102	110	5.3	5Cr–0.5Mo	Forgings
A/SA–182	F91	K90901	90 (620)	15E	1	102	110	6.4	9Cr–1Mo–V	Forgings
A/SA–182	F9	K90941	85 (585)	5B	1	102	110	5.4	9Cr–1Mo	Forgings
A/SA–182	F92	K92460	90 (620)	15E	1	102	110	6.4	9Cr–2W	Forgings
A/SA–182	...	N08367	95 (655)	45	...	111	420	8.2	46Fe–24Ni–21Cr–6Mo–N	Forgings
A/SA–182	F904L	N08904	71 (490)	45	...	111	150	8.2	44Fe–25Ni–21Cr–Mo	Forgings
A/SA–182	FXM–19	S20910	100 (690)	8	3	102	130	8.3	22Cr–13Ni–5Mn	Forgings
A/SA–182	FXM–11	S21904	90 (620)	8	3	102	130	8.3	21Cr–6Ni–9Mn	Forgings
A/SA–182	F304	S30400	70 (485)	8	1	102	130	8.1	18Cr–8Ni	Forgings > 5 in. (127 mm)
A/SA–182	F304	S30400	75 (515)	8	1	102	130	8.1	18Cr–8Ni	Forgings
A/SA–182	F304L	S30403	65 (450)	8	1	102	130	8.1	18Cr–8Ni	Forgings > 5 in. (127 mm)
A/SA–182	F304L	S30403	70 (485)	8	1	102	130	8.1	18Cr–8Ni	Forgings
A/SA–182	F304H	S30409	70 (485)	8	1	102	130	8.1	18Cr–8Ni	Forgings > 5 in. (127 mm)

Copyrighted material licensed to Fermi National Laboratory by Clarivate Analytics (US) LLC, subscriptions.techstreet.com, downloaded on 2020-09-23 17:45:20 +0000 by Fermi National Laboratory User.
No further reproduction or distribution is permitted.

Table QW/QB-422
Ferrous and Nonferrous P-Numbers
Grouping of Base Metals for Qualification (Cont'd)

Spec. No.	Designation, Type, or Grade	UNS No.	Minimum Specified Tensile, ksi (MPa)	Welding P-No.	Welding Group No.	Brazing P-No.	Brazing AWS B2.2 BM	ISO 15608 Group	Nominal Composition	Typical Product Form
						Ferrous (Cont'd)				
A/SA–182	F304H	S30409	75 (515)	8	1	102	130	8.1	18Cr–8Ni	Forgings
A/SA–182	F304N	S30451	80 (550)	8	1	102	130	8.1	18Cr–8Ni–N	Forgings
A/SA–182	F304LN	S30453	70 (485)	8	1	102	130	8.1	18Cr–8Ni–N	Forgings > 5 in. (127 mm)
A/SA–182	F304LN	S30453	75 (515)	8	1	102	130	8.1	18Cr–8Ni–N	Forgings
A/SA–182	F46	S30600	78 (540)	8	1	102	130	8.1	18Cr–15Ni–4Si	Forgings
A/SA–182	F45	S30815	87 (600)	8	2	102	130	8.2	21Cr–11Ni–N	Forgings
A/SA–182	F310	S31000	70 (485)	8	2	102	130	8.2	25Cr–20Ni	Forgings > 5 in. (127 mm)
A/SA–182	F310	S31000	75 (515)	8	2	102	130	8.2	25Cr–20Ni	Forgings
A/SA–182	F310H	S31009	70 (485)	8	2	102	130	8.2	25Cr–20Ni	Forgings > 5 in. (127 mm)
A/SA–182	F310H	S31009	75 (515)	8	2	102	130	8.2	25Cr–20Ni	Forgings
A/SA–182	F310MoLN	S31050	78 (540)	8	2	102	130	8.2	25Cr–22Ni–2Mo–N	Forgings
A/SA–182	F50	S31200	100 (690)	10H	1	102	145	10.2	25Cr–6Ni–Mo–N	Forgings
A/SA–182	F44	S31254	94 (650)	8	4	102	130	8.2	20Cr–18Ni–6Mo	Forgings
A/SA–182	F58	S31266	109 (750)	45	...	102	420	8.2	24Cr–22Ni–6Mo–3Mn–Cu–W–N	Forgings
A/SA–182	F316	S31600	70 (485)	8	1	102	130	8.1	16Cr–12Ni–2Mo	Forgings > 5 in. (127 mm)
A/SA–182	F316	S31600	75 (515)	8	1	102	130	8.1	16Cr–12Ni–2Mo	Forgings
A/SA–182	F316L	S31603	65 (450)	8	1	102	130	8.1	16Cr–12Ni–2Mo	Forgings > 5 in. (127 mm)
A/SA–182	F316L	S31603	70 (485)	8	1	102	130	8.1	16Cr–12Ni–2Mo	Forgings
A/SA–182	F316H	S31609	70 (485)	8	1	102	130	8.1	16Cr–12Ni–2Mo	Forgings > 5 in. (127 mm)
A/SA–182	F316H	S31609	75 (515)	8	1	102	130	8.1	16Cr–12Ni–2Mo	Forgings
A/SA–182	F316N	S31651	80 (550)	8	1	102	130	8.1	16Cr–12Ni–2Mo–N	Forgings
A/SA–182	F316LN	S31653	70 (485)	8	1	102	130	8.1	16Cr–12Ni–2Mo–N	Forgings > 5 in. (127 mm)
A/SA–182	F316LN	S31653	75 (515)	8	1	102	130	8.1	16Cr–12Ni–2Mo–N	Forgings
A/SA–182	F317	S31700	70 (485)	8	1	102	130	8.1	18Cr–13Ni–3Mo	Forgings > 5 in. (127 mm)
A/SA–182	F317	S31700	75 (515)	8	1	102	130	8.1	18Cr–13Ni–3Mo	Forgings
A/SA–182	F317L	S31703	65 (450)	8	1	102	130	8.1	18Cr–13Ni–3Mo	Forgings > 5 in. (127 mm)
A/SA–182	F317L	S31703	70 (485)	8	1	102	130	8.1	18Cr–13Ni–3Mo	Forgings
A/SA–182	F51	S31803	90 (620)	10H	1	102	145	10.1	22Cr–5Ni–3Mo–N	Forgings
A/SA–182	...	S32053	93 (640)	8	4	102	130	8.2	23Cr–25Ni–5.5Mo–N	Forgings
A/SA–182	F321	S32100	70 (485)	8	1	102	140	8.1	18Cr–10Ni–Ti	Forgings > 5 in. (127 mm)
A/SA–182	F321	S32100	75 (515)	8	1	102	140	8.1	18Cr–10Ni–Ti	Forgings
A/SA–182	F321H	S32109	70 (485)	8	1	102	140	8.1	18Cr–10Ni–Ti	Forgings > 5 in. (127 mm)
A/SA–182	F321H	S32109	75 (515)	8	1	102	140	8.1	18Cr–10Ni–Ti	Forgings
A/SA–182	...	S32202	94 (650)	10H	1	102	145	10.1	22Cr–2Ni–Mo–N	Forgings
A/SA–182	F60	S32205	95 (655)	10H	1	102	145	10.1	22Cr–5Ni–3Mo–N	Forgings
A/SA–182	F53	S32750	116 (800)	10H	1	102	145	10.2	25Cr–7Ni–4Mo–N	Forgings
A/SA–182	F55	S32760	109 (750)	10H	1	102	145	10.1	25Cr–8Ni–3Mo–W–Cu–N	Forgings

Copyrighted material licensed to Fermi National Laboratory by Clarivate Analytics (US) LLC, subscriptions.techstreet.com, downloaded on 2020-09-23 17:45:20 +0000 by Fermi National Laboratory User.
No further reproduction or distribution is permitted.

Table QW/QB-422
Ferrous and Nonferrous P-Numbers
Grouping of Base Metals for Qualification (Cont'd)

Spec. No.	Designation, Type, or Grade	UNS No.	Minimum Specified Tensile, ksi (MPa)	Welding P-No.	Welding Group No.	Brazing P-No.	Brazing AWS B2.2 BM	ISO 15608 Group	Nominal Composition	Typical Product Form
						Ferrous (Cont'd)				
A/SA–182	F10	S33100	80 (550)	8	2	102	130	8.1	20Ni–8Cr	Forgings
A/SA–182	F49	S34565	115 (795)	8	4	102	130	8.3	24Cr–17Ni–6Mn–4.5Mo–N	Forgings
A/SA–182	F347	S34700	70 (485)	8	1	102	130	8.1	18Cr–10Ni–Cb	Forgings > 5 in. (127 mm)
A/SA–182	F347	S34700	75 (515)	8	1	102	130	8.1	18Cr–10Ni–Cb	Forgings
A/SA–182	F347H	S34709	70 (485)	8	1	102	130	8.1	18Cr–10Ni–Cb	Forgings > 5 in. (127 mm)
A/SA–182	F347H	S34709	75 (515)	8	1	102	130	8.1	18Cr–10Ni–Cb	Forgings
A/SA–182	F348	S34800	70 (485)	8	1	102	130	8.1	18Cr–10Ni–Cb	Forgings > 5 in. (127 mm)
A/SA–182	F348	S34800	75 (515)	8	1	102	130	8.1	18Cr–10Ni–Cb	Forgings
A/SA–182	F348H	S34809	70 (485)	8	1	102	130	8.1	18Cr–10Ni–Cb	Forgings > 5 in. (127 mm)
A/SA–182	F348H	S34809	75 (515)	8	1	102	130	8.1	18Cr–10Ni–Cb	Forgings
A/SA–182	F54	S39274	116 (800)	10H	1	102	145	10.2	25Cr–7Ni–3Mo–2W–Cu–N	Forgings
A/SA–182	F6a, Cl. 1	S41000	70 (485)	6	1	102	420	7.2	13Cr	Forgings
A/SA–182	F6a, Cl. 2	S41000	85 (585)	6	3	102	150	7.2	13Cr	Forgings
A/SA–182	F6a, Cl. 3	S41000	110 (760)	6	3	102	150	7.2	13Cr	Forgings
A/SA–182	F6a, Cl. 4	S41000	130 (895)	6	3	102	150	7.2	13Cr	Forgings
A/SA–182	F6b	S41026	110 (760)	6	3	102	150	7.2	13Cr–0.5Mo	Forgings
A/SA–182	F6NM	S41500	115 (795)	6	4	102	150	7.2	13Cr–4.5Ni–Mo	Forgings
A/SA–182	F429	S42900	60 (415)	6	2	102	150	7.2	15Cr	Forgings
A/SA–182	F430	S43000	60 (415)	7	2	102	150	7.1	17Cr	Forgings
A/SA–182	FXM–27Cb	S44627	60 (415)	10I	1	102	150	7.1	27Cr–1Mo	Forgings
A/SA–192	...	K01201	47 (325)	1	1	101	100	1.1	C–Si	Smls. tube
A199	T11	K11597	60 (415)	4	1	102	110	5.1	1.25Cr–0.5Mo–Si	Smls. tube
A199	T22	K21590	60 (415)	5A	1	102	110	5.2	2.25Cr–1Mo	Smls. tube
A199	T21	K31545	60 (415)	5A	1	102	110	...	3Cr–1Mo	Smls. tube
A199	T5	K41545	60 (415)	5B	1	102	110	5.3	5Cr–0.5Mo	Smls. tube
A199	T9	K81590	60 (415)	5B	1	102	110	5.4	9Cr–1Mo	Smls. tube
A/SA–203	F	...	75 (515)	9B	1	101	100	9.2	3.5Ni	Plate > 2 in. (51 mm)
A/SA–203	F	...	80 (550)	9B	1	101	100	9.2	3.5Ni	Plate, 2 in. (51 mm) & under
A/SA–203	A	K21703	65 (450)	9A	1	101	100	9.1	2.25Ni	Plate
A/SA–203	B	K22103	70 (485)	9A	1	101	100	9.1	2.25Ni	Plate
A/SA–203	D	K31718	65 (450)	9B	1	101	100	9.2	3.5Ni	Plate
A/SA–203	E	K32018	70 (485)	9B	1	101	100	9.2	3.5Ni	Plate
A/SA–204	A	K11820	65 (450)	3	1	101	100	1.1	C–0.5Mo	Plate
A/SA–204	B	K12020	70 (485)	3	2	101	100	1.1	C–0.5Mo	Plate

Copyrighted material licensed to Fermi National Laboratory by Clarivate Analytics (US) LLC, subscriptions.techstreet.com, downloaded on 2020-09-23 17:45:20 +0000 by Fermi National Laboratory User.
No further reproduction or distribution is permitted.

Table QW/QB-422
Ferrous and Nonferrous P-Numbers
Grouping of Base Metals for Qualification (Cont'd)

Spec. No.	Designation, Type, or Grade	UNS No.	Minimum Specified Tensile, ksi (MPa)	Welding P-No.	Welding Group No.	Brazing P-No.	Brazing AWS B2.2 BM	ISO 15608 Group	Nominal Composition	Typical Product Form
						Ferrous (Cont'd)				
A/SA–204	C	K12320	75 (515)	3	2	101	100	1.2	C–0.5Mo	Plate
A/SA–209	T1b	K11422	53 (365)	3	1	101	100	1.1	C–0.5Mo	Smls. tube
A/SA–209	T1	K11522	55 (380)	3	1	101	100	1.1	C–0.5Mo	Smls. tube
A/SA–209	T1a	K12023	60 (415)	3	1	101	100	1.1	C–0.5Mo	Smls. tube
A/SA–210	A–1	K02707	60 (415)	1	1	101	100	11.1	C–Si	Smls. tube
A/SA–210	C	K03501	70 (485)	1	2	101	100	11.1	C–Mn–Si	Smls. tube
A211	A570–30	K02502	49 (340)	1	1	101	100	1.1	C	Welded pipe
A211	A570–33	K02502	52 (360)	1	1	101	100	1.1	C	Welded pipe
A211	A570–40	K02502	55 (380)	1	1	101	100	1.1	C	Welded pipe
A/SA–213	T2	K11547	60 (415)	3	1	101	100	4.2	0.5Cr–0.5Mo	Smls. tube
A/SA–213	T12	K11562	60 (415)	4	1	102	110	5.1	1Cr–0.5Mo	Smls. tube
A/SA–213	T11	K11597	60 (415)	4	1	102	110	5.1	1.25Cr–0.5Mo–Si	Smls. tube
A/SA–213	T17	K12047	60 (415)	10B	1	102	110	4.1	1Cr–V	Smls. tube
A/SA–213	T22	K21590	60 (415)	5A	1	102	110	5.2	2.25Cr–1Mo	Smls. tube
A/SA–213	T21	K31545	60 (415)	5A	1	102	110	5.2	3Cr–1Mo	Smls. tube
A/SA–213	T5c	K41245	60 (415)	5B	1	102	120	5.3	5Cr–0.5Mo–Ti	Smls. tube
A/SA–213	T5	K41545	60 (415)	5B	1	102	110	5.3	5Cr–0.5Mo	Smls. tube
A/SA–213	T5b	K51545	60 (415)	5B	1	102	110	5.3	5Cr–0.5Mo–Si	Smls. tube
A/SA–213	T91	K90901	85 (585)	15E	1	102	110	6.4	9Cr–1Mo–V	Smls. tube
A/SA–213	T9	K90941	60 (415)	5B	1	102	110	5.4	9Cr–1Mo	Smls. tube
A/SA–213	T92	K92460	90 (620)	15E	1	102	110	6.4	9Cr–2W	Smls. tube
A/SA–213	TP201	S20100	95 (655)	8	3	102	130	8.3	17Cr–4Ni–6Mn	Smls. tube
A/SA–213	TP202	S20200	90 (620)	8	3	102	130	8.3	18Cr–5Ni–9Mn	Smls. tube
A/SA–213	XM–19	S20910	100 (690)	8	3	102	130	8.3	22Cr–13Ni–5Mn	Smls. tube
A/SA–213	TP304	S30400	75 (515)	8	1	102	130	8.1	18Cr–8Ni	Smls. tube
A/SA–213	TP304L	S30403	70 (485)	8	1	102	130	8.1	18Cr–8Ni	Smls. tube
A/SA–213	TP304H	S30409	75 (515)	8	1	102	130	8.1	18Cr–8Ni	Smls. tube
A/SA–213	...	S30432	86 (595)	8	1	102	130	8.1	18Cr–9Ni–3Cu–Cb–N	Smls. tube
A/SA–213	TP304N	S30451	80 (550)	8	1	102	130	8.1	18Cr–8Ni–N	Smls. tube
A/SA–213	TP304LN	S30453	75 (515)	8	1	102	130	8.1	18Cr–8Ni–N	Smls. tube
A/SA–213	S30815	S30815	87 (600)	8	2	102	130	8.2	21Cr–11Ni–N	Smls. tube
A/SA–213	TP309S	S30908	75 (515)	8	2	102	130	8.2	23Cr–12Ni	Smls. tube
A/SA–213	TP309H	S30909	75 (515)	8	2	102	130	8.2	23Cr–12Ni	Smls. tube
A/SA–213	TP309Cb	S30940	75 (515)	8	2	102	130	8.2	23Cr–12Ni–Cb	Smls. tube

Copyrighted material licensed to Fermi National Laboratory by Clarivate Analytics (US) LLC, subscriptions.techstreet.com, downloaded on 2020-09-23 17:45:20 +0000 by Fermi National Laboratory User.
No further reproduction or distribution is permitted.

Table QW/QB-422
Ferrous and Nonferrous P-Numbers
Grouping of Base Metals for Qualification (Cont'd)

Spec. No.	Designation, Type, or Grade	UNS No.	Minimum Specified Tensile, ksi (MPa)	Welding P-No.	Welding Group No.	Brazing P-No.	Brazing AWS B2.2 BM	ISO 15608 Group	Nominal Composition	Typical Product Form
						Ferrous (Cont'd)				
A/SA–213	TP309HCb	S30941	75 (515)	8	2	102	130	8.2	23Cr–12Ni–Cb	Smls. tube
A/SA–213	TP310S	S31008	75 (515)	8	2	102	130	8.2	25Cr–20Ni	Smls. tube
A/SA–213	TP310H	S31009	75 (515)	8	2	102	130	8.2	25Cr–20Ni	Smls. tube
A/SA–213	TP310Cb	S31040	75 (515)	8	2	102	130	8.2	25Cr–20Ni–Cb	Smls. tube
A/SA–213	TP310HCb	S31041	75 (515)	8	2	102	130	8.2	25Cr–20Ni–Cb	Smls. tube
A/SA–213	TP310HCbN	S31042	95 (655)	8	3	102	130	8.2	25Cr–20Ni–Cb–N	Smls. tube
A/SA–213	TP310MoLN	S31050	78 (540)	8	2	102	130	8.2	25Cr–22Ni–2Mo–N	Smls. tube, $t > 1/4$ in. (6 mm)
A/SA–213	TP310MoLN	S31050	84 (580)	8	2	102	130	8.2	25Cr–22Ni–2Mo–N	Smls. tube, $t \leq 1/4$ in. (6 mm)
A/SA–213	...	S31254	95 (655)	8	4	102	130	8.2	20Cr–18Ni–6Mo	Smls. tube, $t > 3/16$ in. (5 mm)
A/SA–213	...	S31254	98 (675)	8	4	102	130	8.2	20Cr–18Ni–6Mo	Smls. tube, $t \leq 3/16$ in. (5 mm)
A/SA–213	TP316	S31600	75 (515)	8	1	102	130	8.1	16Cr–12Ni–2Mo	Smls. tube
A/SA–213	TP316L	S31603	70 (485)	8	1	102	130	8.1	16Cr–12Ni–2Mo	Smls. tube
A/SA–213	TP316H	S31609	75 (515)	8	1	102	130	8.1	16Cr–12Ni–2Mo	Smls. tube
A/SA–213	TP316Ti	S31635	75 (515)	8	1	102	130	8.1	16Cr–12Ni–2Mo–Ti	Smls. tube
A/SA–213	TP316N	S31651	80 (550)	8	1	102	130	8.1	16Cr–12Ni–2Mo–N	Smls. tube
A/SA–213	TP316LN	S31653	75 (515)	8	1	102	130	8.1	16Cr–12Ni–2Mo–N	Smls. tube
A/SA–213	TP317	S31700	75 (515)	8	1	102	130	8.1	18Cr–13Ni–3Mo	Smls. tube
A/SA–213	TP317L	S31703	75 (515)	8	1	102	130	8.1	18Cr–13Ni–3Mo	Smls. tube
A/SA–213	TP317LM	S31725	75 (515)	8	4	102	130	8.1	19Cr–15Ni–4Mo	Smls. tube
A/SA–213	TP317LMN	S31726	80 (550)	8	4	102	130	8.1	19Cr–15.5Ni–4Mo	Smls. tube
A/SA–213	TP321	S32100	75 (515)	8	1	102	140	8.1	18Cr–10Ni–Ti	Smls. tube
A/SA–213	TP321H	S32109	75 (515)	8	1	102	140	8.1	18Cr–10Ni–Ti	Smls. tube
A/SA–213	S32615	S32615	80 (550)	8	1	102	130	8.1	18Cr–20Ni–5.5Si	Smls. tube
A/SA–213	S34565	S34565	115 (795)	8	4	102	130	8.3	24Cr–17Ni–6Mn–4.5Mo–N	Smls. tube
A/SA–213	TP347	S34700	75 (515)	8	1	102	130	8.1	18Cr–10Ni–Cb	Smls. tube
A/SA–213	TP347H	S34709	75 (515)	8	1	102	130	8.1	18Cr–10Ni–Cb	Smls. tube
A/SA–213	TP347HFG	S34710	80 (550)	8	1	102	130	8.1	18Cr–10Ni–Cb	Smls. tube
A/SA–213	TP347LN	S34751	75 (515)	8	1	102	130	8.1	18Cr–10Ni–Cb–N	Smls. tube
A/SA–213	TP348	S34800	75 (515)	8	1	102	130	8.1	18Cr–10Ni–Cb	Smls. tube
A/SA–213	TP348H	S34809	75 (515)	8	1	102	130	8.1	18Cr–10Ni–Cb	Smls. tube
A/SA–213	XM–15	S38100	75 (515)	8	1	102	130	8.1	18Cr–18Ni–2Si	Smls. tube
A/SA–213	...	S38815	78 (540)	8	1	102	130	8.1	14Cr–16Ni–6Si–Cu–Mo	Smls. tube
A/SA–214	...	K01807	47 (325)	1	1	101	100	1.1	C	E.R.W. tube
A/SA–216	WCA	J02502	60 (415)	1	1	101	100	1.1	C–Si	Castings
A/SA–216	WCC	J02503	70 (485)	1	2	101	100	1.1	C–Mn–Si	Castings
A/SA–216	WCB	J03002	70 (485)	1	2	101	100	1.1	C–Si	Castings

Copyrighted material licensed to Fermi National Laboratory by Clarivate Analytics (US) LLC, subscriptions.techstreet.com, downloaded on 2020-09-23 17:45:20 +0000 by Fermi National Laboratory User.
No further reproduction or distribution is permitted.

Table QW/QB-422
Ferrous and Nonferrous P-Numbers
Grouping of Base Metals for Qualification (Cont'd)

Spec. No.	Designation, Type, or Grade	UNS No.	Minimum Specified Tensile, ksi (MPa)	Welding P-No.	Welding Group No.	Brazing P-No.	Brazing AWS B2.2 BM	ISO 15608 Group	Nominal Composition	Typical Product Form
						Ferrous (Cont'd)				
A/SA–217	WC6	J12072	70 (485)	4	1	102	110	5.1	1.25Cr–0.5Mo	Castings
A/SA–217	WC4	J12082	70 (485)	4	1	101	100	9.1	1Ni–0.5Cr–0.5Mo	Castings
A/SA–217	WC1	J12524	65 (450)	3	1	101	100	1.1	C–0.5Mo	Castings
A/SA–217	WC9	J21890	70 (485)	5A	1	102	110	5.2	2.25Cr–1Mo	Castings
A/SA–217	WC5	J22000	70 (485)	4	1	101	100	4.2	0.75Ni–1Mo–0.75Cr	Castings
A/SA–217	C5	J42045	90 (620)	5B	1	102	110	5.3	5Cr–0.5Mo	Castings
A/SA–217	C12	J82090	90 (620)	5B	1	102	110	5.4	9Cr–1Mo	Castings
A/SA–217	C12A	J84090	85 (585)	15E	1	102	110	6.4	9Cr–1Mo–V	Castings
A/SA–217	CA15	J91150	90 (620)	6	3	102	150	7.2	13Cr	Castings
A/SA–225	D	K12004	75 (515)	10A	1	101	100	2.1	Mn–0.5Ni–V	Plate > 3 in. (76 mm)
A/SA–225	D	K12004	80 (550)	10A	1	101	100	2.1	Mn–0.5Ni–V	Plate, 3 in. (76 mm) & under
A/SA–225	C	K12524	105 (725)	10A	1	101	100	4.1	Mn–0.5Ni–V	Plate
A/SA–234	WP11, Cl. 1	...	60 (415)	4	1	102	110	5.1	1.25Cr–0.5Mo–Si	Piping fittings
A/SA–234	WP11, Cl. 3	...	75 (515)	4	1	102	110	5.1	1.25Cr–0.5Mo–Si	Piping fittings
A/SA–234	WPB	K03006	60 (415)	1	1	101	100	11.1	C–Mn–Si	Piping fittings
A/SA–234	WPC	K03501	70 (485)	1	2	101	100	11.1	C–Mn–Si	Piping fittings
A/SA–234	WP12, Cl. 1	K12062	60 (415)	4	1	101	110	5.1	1Cr–0.5Mo	Piping fittings
A/SA–234	WP12, Cl. 2	K12062	70 (485)	4	1	101	110	5.1	1Cr–0.5Mo	Piping fittings
A/SA–234	WP1	K12821	55 (380)	3	1	101	100	11.2	C–0.5Mo	Piping fittings
A/SA–234	WP22, Cl. 1	K21590	60 (415)	5A	1	102	110	5.2	2.25Cr–1Mo	Piping fittings
A/SA–234	WP22, Cl. 3	K21590	75 (515)	5A	1	102	110	5.2	2.25Cr–1Mo	Piping fittings
A/SA–234	WPR	K22035	63 (435)	9A	1	101	100	9.1	2Ni–1Cu	Piping fittings
A/SA–234	WP5, Cl. 1	K41545	60 (415)	5B	1	102	110	5.3	5Cr–0.5Mo	Piping fittings
A/SA–234	WP5, Cl. 3	K41545	75 (515)	5B	1	102	110	5.3	5Cr–0.5Mo	Piping fittings
A/SA–234	WP91	K90901	85 (585)	15E	1	102	110	6.4	9Cr–1Mo–V	Piping fittings
A/SA–234	WP9, Cl. 1	K90941	60 (415)	5B	1	102	110	5.4	9Cr–1Mo	Piping fittings
A/SA–234	WP9, Cl. 3	K90941	75 (515)	5B	1	102	110	5.4	9Cr–1Mo	Piping fittings
A/SA–234	WP92	K92460	90 (620)	15E	1	102	110	6.4	9Cr–2W	Piping fittings
A/SA–240	...	N08367	95 (655)	45	...	111	420	8.2	46Fe–24Ni–21Cr–6Mo–N	Plate ≥ 0.1875 in. (5 mm)
A/SA–240	...	N08367	100 (690)	45	...	111	420	8.2	46Fe–24Ni–21Cr–6Mo–N	Sheet & strip < 0.1875 in. (5 mm)
A/SA–240	904L	N08904	71 (490)	45	...	111	420	8.2	44Fe–25Ni–21Cr–Mo	Plate, sheet & strip
A/SA–240	201–1	S20100	75 (515)	8	3	102	130	8.3	17Cr–4Ni–6Mn	Plate, sheet & strip
A/SA–240	201–2	S20100	95 (655)	8	3	102	130	8.3	17Cr–4Ni–6Mn	Plate, sheet & strip
A/SA–240	201LN	S20153	95 (655)	8	3	...	130	8.3	16Cr–4Ni–6Mn	Plate, sheet & strip

Copyrighted material licensed to Fermi National Laboratory by Clarivate Analytics (US) LLC, subscriptions.techstreet.com, downloaded on 2020-09-23 17:45:20 +0000 by Fermi National Laboratory User.
No further reproduction or distribution is permitted.

Table QW/QB-422
Ferrous and Nonferrous P-Numbers
Grouping of Base Metals for Qualification (Cont'd)

Spec. No.	Designation, Type, or Grade	UNS No.	Minimum Specified Tensile, ksi (MPa)	Welding P-No.	Welding Group No.	Brazing P-No.	Brazing AWS B2.2 BM	ISO 15608 Group	Nominal Composition	Typical Product Form
						Ferrous (Cont'd)				
A/SA–240	202	S20200	90 (620)	8	3	102	130	8.3	18Cr–5Ni–9Mn	Plate, sheet & strip
A/SA–240	...	S20400	95 (655)	8	3	102	130	8.3	16Cr–9Mn–2Ni–N	Plate, sheet & strip
A/SA–240	XM–19	S20910	100 (690)	8	3	102	130	8.3	22Cr–13Ni–5Mn	Plate
A/SA–240	XM–19	S20910	105 (725)	8	3	102	130	8.3	22Cr–13Ni–5Mn	Sheet & strip
A/SA–240	XM–17	S21600	90 (620)	8	3	102	130	8.3	19Cr–8Mn–6Ni–Mo–N	Plate
A/SA–240	XM–17	S21600	100 (690)	8	3	102	130	8.3	19Cr–8Mn–6Ni–Mo–N	Sheet & strip
A/SA–240	XM–18	S21603	90 (620)	8	3	102	130	8.3	19Cr–8Mn–6Ni–Mo–N	Plate
A/SA–240	XM–18	S21603	100 (690)	8	3	102	130	8.3	19Cr–8Mn–6Ni–Mo–N	Sheet & strip
A/SA–240	S21800	S21800	95 (655)	8	3	102	130	8.1	18Cr–8Ni–4Si–N	Plate, sheet & strip
A/SA–240	XM–29	S24000	100 (690)	8	3	102	130	8.3	18Cr–3Ni–12Mn	Plate, sheet & strip
A/SA–240	301	S30100	75 (515)	8	1	102	130	8.1	17Cr–7Ni	Plate, sheet & strip
A/SA–240	302	S30200	75 (515)	8	1	102	130	8.1	18Cr–8Ni	Plate, sheet & strip
A/SA–240	304	S30400	75 (515)	8	1	102	130	8.1	18Cr–8Ni	Plate, sheet & strip
A/SA–240	304L	S30403	70 (485)	8	1	102	130	8.1	18Cr–8Ni	Plate, sheet & strip
A/SA–240	304H	S30409	75 (515)	8	1	102	130	8.1	18Cr–8Ni	Plate, sheet & strip
A/SA–240	304N	S30451	80 (550)	8	1	102	130	8.1	18Cr–8Ni–N	Plate, sheet & strip
A/SA–240	XM–21	S30452	85 (585)	8	1	102	130	8.1	18Cr–8Ni–N	Plate
A/SA–240	XM–21	S30452	90 (620)	8	1	102	130	8.1	18Cr–8Ni–N	Sheet & strip
A/SA–240	304LN	S30453	75 (515)	8	1	102	130	8.1	18Cr–8Ni–N	Plate, sheet & strip
A/SA–240	305	S30500	70 (485)	8	1	102	130	8.1	18Cr–11Ni	Plate, sheet & strip
A/SA–240	S30600	S30600	78 (540)	8	1	102	130	8.1	18Cr–15Ni–4Si	Plate, sheet & strip
A/SA–240	S30601	S30601	78 (540)	8	1	102	130	8.1	17.5Cr–17.5Ni–5.3Si	Plate, sheet & strip
A/SA–240	S30815	S30815	87 (600)	8	2	102	130	8.2	21Cr–11Ni–N	Plate, sheet & strip
A/SA–240	309S	S30908	75 (515)	8	2	102	130	8.2	23Cr–12Ni	Plate, sheet & strip
A/SA–240	309H	S30909	75 (515)	8	2	102	130	8.2	23Cr–12Ni	Plate, sheet & strip
A/SA–240	309Cb	S30940	75 (515)	8	2	102	130	8.2	23Cr–12Ni–Cb	Plate, sheet & strip
A/SA–240	309HCb	S30941	75 (515)	8	2	102	130	8.2	23Cr–12Ni–Cb	Plate, sheet & strip
A/SA–240	310S	S31008	75 (515)	8	2	102	130	8.2	25Cr–20Ni	Plate, sheet & strip
A/SA–240	310H	S31009	75 (515)	8	2	102	130	8.2	25Cr–20Ni	Plate, sheet & strip
A/SA–240	310Cb	S31040	75 (515)	8	2	102	130	8.2	25Cr–20Ni–Cb	Plate, sheet & strip
A/SA–240	310HCb	S31041	75 (515)	8	2	102	130	8.2	25Cr–20Ni–Cb	Plate, sheet & strip
A/SA–240	310MoLN	S31050	78 (540)	8	2	102	130	8.2	25Cr–22Ni–2Mo–N	Plate, sheet & strip, $t > \frac{1}{4}$ in. (6 mm)
A/SA–240	310MoLN	S31050	84 (580)	8	2	102	130	8.2	25Cr–22Ni–2Mo–N	Plate, sheet & strip, $t \leq \frac{1}{4}$ in. (6 mm)
A/SA–240	S31200	S31200	100 (690)	10H	1	102	145	10.2	25Cr–6Ni–Mo–N	Plate, sheet & strip
A/SA–240	S31254	S31254	95 (655)	8	4	102	130	8.2	20Cr–18Ni–6Mo	Plate
A/SA–240	S31254	S31254	100 (690)	8	4	102	130	8.2	20Cr–18Ni–6Mo	Sheet & strip
A/SA–240	S31260	S31260	100 (690)	10H	1	102	145	10.2	25Cr–6.5Ni–3Mo–N	Plate, sheet & strip

Copyrighted material licensed to Fermi National Laboratory by Clarivate Analytics (US) LLC, subscriptions.techstreet.com, downloaded on 2020-09-23 17:45:20 +0000 by Fermi National Laboratory User.
No further reproduction or distribution is permitted.

Table QW/QB-422
Ferrous and Nonferrous P-Numbers
Grouping of Base Metals for Qualification (Cont'd)

Spec. No.	Designation, Type, or Grade	UNS No.	Minimum Specified Tensile, ksi (MPa)	Welding P-No.	Welding Group No.	Brazing P-No.	Brazing AWS B2.2 BM	ISO 15608 Group	Nominal Composition	Typical Product Form
						Ferrous (Cont'd)				
A/SA-240	...	S31266	109 (750)	45	...	102	420	8.2	24Cr–22Ni–6Mo–3Mn–Cu–W–N	Plate, sheet & strip
A/SA-240	S31277	S31277	112 (770)	45	...	111	420	8.2	27Ni–22Cr–7Mo–Mn–Cu	Plate, sheet & strip
A/SA-240	316	S31600	75 (515)	8	1	102	130	8.1	16Cr–12Ni–2Mo	Plate, sheet & strip
A/SA-240	316L	S31603	70 (485)	8	1	102	130	8.1	16Cr–12Ni–2Mo	Plate, sheet & strip
A/SA-240	316H	S31609	75 (515)	8	1	102	130	8.1	16Cr–12Ni–2Mo	Plate, sheet & strip
A/SA-240	316Ti	S31635	75 (515)	8	1	102	130	8.1	16Cr–12Ni–2Mo–Ti	Plate, sheet & strip
A/SA-240	316Cb	S31640	75 (515)	8	1	102	130	8.1	16Cr–12Ni–2Mo–Cb	Plate, sheet & strip
A/SA-240	316N	S31651	80 (550)	8	1	102	130	8.1	16Cr–12Ni–2Mo–N	Plate, sheet & strip
A/SA-240	316LN	S31653	75 (515)	8	1	102	130	8.1	16Cr–12Ni–2Mo–N	Plate, sheet & strip
A/SA-240	317	S31700	75 (515)	8	1	102	130	8.1	18Cr–13Ni–3Mo	Plate, sheet & strip
A/SA-240	317L	S31703	75 (515)	8	1	102	130	8.1	18Cr–13Ni–3Mo	Plate, sheet & strip
A/SA-240	S31725	S31725	75 (515)	8	4	102	130	8.1	19Cr–15Ni–4Mo	Plate, sheet & strip
A/SA-240	S31726	S31726	80 (550)	8	4	102	130	8.1	19Cr–15.5Ni–4Mo	Plate, sheet & strip
A/SA-240	S31753	S31753	80 (550)	8	1	102	130	8.1	18Cr–13Ni–3Mo–N	Plate, sheet & strip
A/SA-240	S31803	S31803	90 (620)	10H	1	102	145	10.1	22Cr–5Ni–3Mo–N	Plate, sheet & strip
A/SA-240	...	S32003	90 (620)	10H	1	102	145	10.1	21Cr–3.5Ni–Mo–N	Plate, sheet & strip
A/SA-240	...	S32053	93 (640)	8	4	102	130	8.2	23Cr–25Ni–5.5Mo–N	Plate, sheet & strip
A/SA-240	321	S32100	75 (515)	8	1	102	140	8.1	18Cr–10Ni–Ti	Plate, sheet & strip
A/SA-240	...	S32101	95 (655)	10H	1	102	145	10.1	21Cr–5Mn–1.5Ni–Cu–N	Plate, sheet & strip > 0.187 in. (5 mm)
A/SA-240	...	S32101	101 (700)	10H	1	102	145	10.1	21Cr–5Mn–1.5Ni–Cu–N	Plate, sheet & strip ≤ 0.187 in. (5 mm)
A/SA-240	321H	S32109	75 (515)	8	1	102	140	8.1	18Cr–10Ni–Ti	Plate, sheet & strip
A/SA-240	...	S32202	94 (650)	10H	1	102	145	10.1	22Cr–2Ni–Mo–N	Plate, sheet & strip
A/SA-240	2205	S32205	95 (655)	10H	1	102	145	10.1	22Cr–5Ni–3Mo–N	Plate, sheet & strip
A/SA-240	...	S32304	87 (600)	10H	1	102	145	10.1	23Cr–4Ni–Mo–Cu–N	Plate, sheet & strip
A/SA-240	S32550	S32550	110 (760)	10H	1	102	145	10.2	25Cr–5Ni–3Mo–2Cu	Plate, sheet & strip
A/SA-240	S32615	S32615	80 (550)	8	1	102	130	8.1	18Cr–20Ni–5.5Si	Plate, sheet & strip
A/SA-240	...	S32654	109 (750)	8	4	102	130	8.2	24Cr–22Ni–7Mo–3Mn	Plate, sheet & strip
A/SA-240	S32750	S32750	116 (800)	10H	1	102	145	10.2	25Cr–7Ni–4Mo–N	Plate, sheet & strip
A/SA-240	S32760	S32760	108 (745)	10H	1	102	145	10.2	25Cr–8Ni–3Mo–W–Cu–N	Plate, sheet & strip
A/SA-240	329	S32900	90 (620)	10H	1	102	145	10.2	26Cr–4Ni–Mo	Plate, sheet & strip
A/SA-240	S32906	S32906	109 (750)	10H	1	102	145	10.2	29Cr–6.5Ni–2Mo–N	Plate, sheet & strip ≥ 0.40 in. (10 mm)
A/SA-240	S32906	S32906	116 (800)	10H	1	102	145	10.2	29Cr–6.5Ni–2Mo–N	Plate, sheet & strip < 0.40 in. (10 mm)
A/SA-240	S32950	S32950	100 (690)	10H	1	102	145	10.2	26Cr–4Ni–Mo–N	Plate, sheet & strip
A/SA-240	S34565	S34565	115 (795)	8	4	102	130	8.3	24Cr–17Ni–6Mn–4.5Mo–N	Plate, sheet & strip
A/SA-240	347	S34700	75 (515)	8	1	102	130	8.1	18Cr–10Ni–Cb	Plate, sheet & strip
A/SA-240	347H	S34709	75 (515)	8	1	102	130	8.1	18Cr–10Ni–Cb	Plate, sheet & strip
A/SA-240	348	S34800	75 (515)	8	1	102	130	8.1	18Cr–10Ni–Cb	Plate, sheet & strip

Copyrighted material licensed to Fermi National Laboratory by Clarivate Analytics (US) LLC, subscriptions.techstreet.com, downloaded on 2020-09-23 17:45:20 +0000 by Fermi National Laboratory User.
No further reproduction or distribution is permitted.

Table QW/QB-422
Ferrous and Nonferrous P-Numbers
Grouping of Base Metals for Qualification (Cont'd)

Spec. No.	Designation, Type, or Grade	UNS No.	Minimum Specified Tensile, ksi (MPa)	Welding P-No.	Welding Group No.	Brazing P-No.	Brazing AWS B2.2 BM	ISO 15608 Group	Nominal Composition	Typical Product Form
						Ferrous (Cont'd)				
A/SA–240	348H	S34809	75 (515)	8	1	102	130	8.1	18Cr–10Ni–Cb	Plate, sheet & strip
A/SA–240	XM–15	S38100	75 (515)	8	1	102	130	8.1	18Cr–18Ni–2Si	Plate, sheet & strip
A/SA–240	...	S38815	78 (540)	8	1	102	130	8.1	14Cr–16Ni–6Si–Cu–Mo	Plate, sheet & strip
A/SA–240	405	S40500	60 (415)	7	1	102	160	7.1	12Cr–Al	Plate, sheet & strip
A/SA–240	409	S40910	55 (380)	7	1	102	150	7.1	11Cr–Ti	Plate, sheet & strip
A/SA–240	409	S40920	55 (380)	7	1	102	150	7.1	11Cr–Ti	Plate, sheet & strip
A/SA–240	409	S40930	55 (380)	7	1	102	150	7.1	11Cr–Ti	Plate, sheet & strip
A/SA–240	410	S41000	65 (450)	6	1	102	150	7.2	13Cr	Plate, sheet & strip
A/SA–240	410S	S41008	60 (415)	7	1	102	150	7.2	13Cr	Plate, sheet & strip
A/SA–240	S41500	S41500	115 (795)	6	4	102	150	7.2	13Cr–4.5Ni–Mo	Plate, sheet & strip
A/SA–240	429	S42900	65 (450)	6	2	102	150	7.2	15Cr	Plate, sheet & strip
A/SA–240	430	S43000	65 (450)	7	2	102	150	7.1	17Cr	Plate, sheet & strip
A/SA–240	439	S43035	60 (415)	7	2	102	150	7.1	18Cr–Ti	Plate, sheet & strip
A/SA–240	S43932	S43932	60 (415)	7	2	102	150	7.1	18Cr–Ti–Cb	Plate, sheet & strip
A/SA–240	S43940	S43940	62 (425)	7	2	102	150	7.1	18Cr–Ti–Cb	Plate, sheet & strip
A/SA–240	...	S44100	60 (415)	7	2	102	150	7.1	18Cr–Cb–Ti	Plate, sheet & strip
A/SA–240	S44400	S44400	60 (415)	7	2	102	150	7.1	18Cr–2Mo	Plate, sheet & strip
A/SA–240	XM–33	S44626	68 (470)	10I	1	102	150	7.1	27Cr–1Mo–Ti	Plate, sheet & strip
A/SA–240	XM–27	S44627	65 (450)	10I	1	102	150	7.1	27Cr–1Mo	Plate, sheet & strip
A/SA–240	S44635	S44635	90 (620)	10I	1	102	150	7.1	25Cr–4Ni–4Mo–Ti	Plate, sheet & strip
A/SA–240	S44660	S44660	85 (585)	10K	1	102	150	7.1	26Cr–3Ni–3Mo	Plate, sheet & strip
A/SA–240	S44700	S44700	80 (550)	10J	1	102	150	7.1	29Cr–4Mo	Plate, sheet & strip
A/SA–240	S44800	S44800	80 (550)	10K	1	102	150	7.1	29Cr–4Mo–2Ni	Plate, sheet & strip
A/SA–240	...	S82012	94 (650)	10H	1	102	145	10.1	20Cr–1Ni–Mo–N	Plate, sheet & strip > 0.187 in. (5 mm)
A/SA–240	...	S82012	102 (705)	10H	1	102	145	10.1	20Cr–1Ni–Mo–N	Plate, sheet & strip ≤ 0.187 in. (5 mm)
A/SA–240	...	S82031	94 (650)	10H	1	102	145	10.1	21Cr–3Ni–1Mo–N	Plate, sheet & strip > 0.187 in. (5 mm)
A/SA–240	...	S82031	102 (705)	10H	1	102	145	10.1	21Cr–3Ni–1Mo–N	Plate, sheet & strip ≤ 0.187 in. (5 mm)
A/SA–240	...	S82441	99 (680)	10H	1	102	145	10.1	24Cr–4Ni–3Mn–1.5Mo–N	Plate, sheet & strip ≥ 0.40 in. (10 mm)
A/SA–240	...	S82441	107 (740)	10H	1	102	145	10.1	24Cr–4Ni–3Mn–1.5Mo–N	Plate, sheet & strip < 0.40 in. (10 mm)
A/SA–249	...	N08367	95 (655)	45	...	111	420	8.2	46Fe–24Ni–21Cr–6Mo–N	Welded tube > 0.1875 in. (5 mm)
A/SA–249	...	N08367	100 (690)	45	...	111	420	8.2	46Fe–24Ni–21Cr–6Mo–N	Welded tube ≤ 0.1875 in. (5 mm)
A/SA–249	...	N08904	71 (490)	45	...	111	420	8.2	44Fe–25Ni–21Cr–Mo	Welded tube
A/SA–249	TP 201	S20100	95 (655)	8	3	102	130	8.3	17Cr–4Ni–6Mn	Welded tube
A/SA–249	TP 202	S20200	90 (620)	8	3	102	130	8.3	18Cr–5Ni–9Mn	Welded tube
A/SA–249	TP XM–19	S20910	100 (690)	8	3	102	130	8.3	22Cr–13Ni–5Mn	Welded tube
A/SA–249	TP XM–29	S24000	100 (690)	8	3	102	130	8.3	18Cr–3Ni–12Mn	Welded tube

Copyrighted material licensed to Fermi National Laboratory by Clarivate Analytics (US) LLC, subscriptions.techstreet.com, downloaded on 2020-09-23 17:45:20 +0000 by Fermi National Laboratory User.
No further reproduction or distribution is permitted.

Table QW/QB-422
Ferrous and Nonferrous P-Numbers
Grouping of Base Metals for Qualification (Cont'd)

Spec. No.	Designation, Type, or Grade	UNS No.	Minimum Specified Tensile, ksi (MPa)	Welding P-No.	Welding Group No.	Brazing P-No.	Brazing AWS B2.2 BM	ISO 15608 Group	Nominal Composition	Typical Product Form
						Ferrous (Cont'd)				
A/SA–249	TP304	S30400	75 (515)	8	1	102	130	8.1	18Cr–8Ni	Welded tube
A/SA–249	TP304L	S30403	70 (485)	8	1	102	130	8.1	18Cr–8Ni	Welded tube
A/SA–249	TP304H	S30409	75 (515)	8	1	102	130	8.1	18Cr–8Ni	Welded tube
A/SA–249	TP304N	S30451	80 (550)	8	1	102	130	8.1	18Cr–8Ni–N	Welded tube
A/SA–249	TP304LN	S30453	75 (515)	8	1	102	130	8.1	18Cr–8Ni–N	Welded tube
A/SA–249	S30815	S30815	87 (600)	8	2	102	130	8.2	21Cr–11Ni–N	Welded tube
A/SA–249	TP309S	S30908	75 (515)	8	2	102	130	8.2	23Cr–12Ni	Welded tube
A/SA–249	TP309H	S30909	75 (515)	8	2	102	130	8.2	23Cr–12Ni	Welded tube
A/SA–249	TP309Cb	S30940	75 (515)	8	2	102	130	8.2	23Cr–12Ni–Cb	Welded tube
A/SA–249	TP309HCb	S30941	75 (515)	8	2	102	130	8.2	23Cr–12Ni–Cb	Welded tube
A/SA–249	TP310S	S31008	75 (515)	8	2	102	130	8.2	25Cr–20Ni	Welded tube
A/SA–249	TP310H	S31009	75 (515)	8	2	102	130	8.2	25Cr–20Ni	Welded tube
A/SA–249	TP310Cb	S31040	75 (515)	8	2	102	130	8.2	25Cr–20Ni–Cb	Welded tube
A/SA–249	TP310HCb	S31041	75 (515)	8	2	102	130	8.2	25Cr–20Ni–Cb	Welded tube
A/SA–249	TP310MoLN	S31050	78 (540)	8	2	102	130	8.2	25Cr–22Ni–2Mo–N	Welded tube, $t > 1/4$ in. (6 mm)
A/SA–249	TP310MoLN	S31050	84 (580)	8	2	102	130	8.2	25Cr–22Ni–2Mo–N	Welded tube, $t \leq 1/4$ in. (6 mm)
A/SA–249	S31254	S31254	95 (655)	8	4	102	130	8.2	20Cr–18Ni–6Mo	Welded tube, $t > 3/16$ in. (5 mm)
A/SA–249	S31254	S31254	98 (675)	8	4	102	130	8.2	20Cr–18Ni–6Mo	Welded tube, $t \leq 3/16$ in. (5 mm)
A/SA–249	TP316	S31600	75 (515)	8	1	102	130	8.1	16Cr–12Ni–2Mo	Welded tube
A/SA–249	TP316L	S31603	70 (485)	8	1	102	130	8.1	16Cr–12Ni–2Mo	Welded tube
A/SA–249	TP316H	S31609	75 (515)	8	1	102	130	8.1	16Cr–12Ni–2Mo	Welded tube
A/SA–249	TP316N	S31651	80 (550)	8	1	102	130	8.1	16Cr–12Ni–2Mo–N	Welded tube
A/SA–249	TP316LN	S31653	75 (515)	8	1	102	130	8.1	16Cr–12Ni–2Mo–N	Welded tube
A/SA–249	TP317	S31700	75 (515)	8	1	102	130	8.1	18Cr–13Ni–3Mo	Welded tube
A/SA–249	TP317L	S31703	75 (515)	8	1	102	130	8.1	18Cr–13Ni–3Mo	Welded tube
A/SA–249	S31725	S31725	75 (515)	8	4	102	130	8.1	19Cr–15Ni–4Mo	Welded tube
A/SA–249	S31726	S31726	80 (550)	8	4	102	130	8.1	19Cr–15.5Ni–4Mo	Welded tube
A/SA–249	...	S32053	93 (640)	8	4	102	130	8.2	23Cr–25Ni–5.5Mo–N	Welded tube
A/SA–249	TP321	S32100	75 (515)	8	1	102	140	8.1	18Cr–10Ni–Ti	Welded tube
A/SA–249	TP321H	S32109	75 (515)	8	1	102	140	8.1	18Cr–10Ni–Ti	Welded tube
A/SA–249	TP347	S34700	75 (515)	8	1	102	130	8.1	18Cr–10Ni–Cb	Welded tube
A/SA–249	TP347H	S34709	75 (515)	8	1	102	130	8.1	18Cr–10Ni–Cb	Welded tube
A/SA–249	TP348	S34800	75 (515)	8	1	102	130	8.1	18Cr–10Ni–Cb	Welded tube
A/SA–249	TP348H	S34809	75 (515)	8	1	102	130	8.1	18Cr–10Ni–Cb	Welded tube
A/SA–249	TP XM–15	S38100	75 (515)	8	1	102	130	8.1	18Cr–18Ni–2Si	Welded tube
A/SA–249	...	S38815	78 (540)	8	1	102	130	8.1	14Cr–16Ni–6Si–Cu–Mo	Welded tube

Copyrighted material licensed to Fermi National Laboratory by Clarivate Analytics (US) LLC, subscriptions.techstreet.com, downloaded on 2020-09-23 17:45:20 +0000 by Fermi National Laboratory User.
No further reproduction or distribution is permitted.

Table QW/QB-422
Ferrous and Nonferrous P-Numbers
Grouping of Base Metals for Qualification (Cont'd)

Spec. No.	Designation, Type, or Grade	UNS No.	Minimum Specified Tensile, ksi (MPa)	Welding P-No.	Welding Group No.	Brazing P-No.	Brazing AWS B2.2 BM	ISO 15608 Group	Nominal Composition	Typical Product Form
Ferrous (Cont'd)										
A/SA–250	T1b	K11422	53 (365)	3	1	101	100	1.1	C–0.5Mo	E.R.W. tube
A/SA–250	T1	K11522	55 (380)	3	1	101	100	1.1	C–0.5Mo	E.R.W. tube
A/SA–250	T2	K11547	60 (415)	3	1	101	100	4.2	0.5Cr–0.5Mo	E.R.W. tube
A/SA–250	T12	K11562	60 (415)	4	1	102	110	5.1	1Cr–0.5Mo	E.R.W. tube
A/SA–250	T11	K11597	60 (415)	4	1	102	110	5.1	1.25Cr–0.5Mo–Si	E.R.W. tube
A/SA–250	T1a	K12023	60 (415)	3	1	101	100	1.1	C–0.5Mo	E.R.W. tube
A/SA–250	T22	K21590	60 (415)	5A	1	102	110	5.2	2.25Cr–1Mo	E.R.W. tube
A254	Cl. 1	K01001	42 (290)	...	...	101	100	NA	C	Cu brazed tube
A254	Cl. 2	K01001	42 (290)	...	...	101	100	NA	C	Cu brazed tube
A/SA–266	4	K03017	70 (485)	1	2	101	100	11.1	C–Mn–Si	Forgings
A/SA–266	1	K03506	60 (415)	1	1	101	100	11.1	C–Si	Forgings
A/SA–266	2	K03506	70 (485)	1	2	101	100	11.1	C–Si	Forgings
A/SA–266	3	K05001	75 (515)	1	2	101	100	11.2	C–Si	Forgings
A/SA–268	TP405	S40500	60 (415)	7	1	102	160	7.1	12Cr–Al	Smls. & welded tube
A/SA–268	S40800	S40800	55 (380)	7	1	102	150	7.1	12Cr–Ti	Smls. & welded tube
A/SA–268	TP409	S40900	55 (380)	7	1	102	150	7.1	11Cr–Ti	Smls. & welded tube
A/SA–268	TP410	S41000	60 (415)	6	1	102	150	7.2	13Cr	Smls. & welded tube
A/SA–268	S41500	S41500	115 (795)	6	4	102	150	7.2	13Cr–4.5Ni–Mo	Smls. & welded tube
A/SA–268	TP429	S42900	60 (415)	6	2	102	150	7.2	15Cr	Smls. & welded tube
A/SA–268	TP430	S43000	60 (415)	7	2	102	150	7.1	17Cr	Smls. & welded tube
A/SA–268	TP439	S43035	60 (415)	7	2	102	150	7.1	18Cr–Ti	Smls. & welded tube
A/SA–268	TP430Ti	S43036	60 (415)	7	2	102	160	7.1	18Cr–Ti	Smls. & welded tube
A/SA–268	18Cr–2Mo	S44400	60 (415)	7	2	102	150	7.1	18Cr–2Mo	Smls. & welded tube
A/SA–268	TP446–1	S44600	70 (485)	10I	1	102	150	7.1	27Cr	Smls. & welded tube
A/SA–268	TP446–2	S44600	65 (450)	10I	1	102	150	7.1	27Cr	Smls. & welded tube
A/SA–268	TPXM–33	S44626	68 (470)	10I	1	102	150	7.1	27Cr–1Mo–Ti	Smls. & welded tube
A/SA–268	TPXM–27	S44627	65 (450)	10I	1	102	150	7.1	27Cr–1Mo	Smls. & welded tube
A/SA–268	25–4–4	S44635	90 (620)	10I	1	102	150	7.1	25Cr–4Ni–4Mo–Ti	Smls. & welded tube
A/SA–268	26–3–3	S44660	85 (585)	10K	1	102	150	7.1	26Cr–3Ni–3Mo	Smls. & welded tube
A/SA–268	29–4	S44700	80 (550)	10J	1	102	150	7.1	29Cr–4Mo	Smls. & welded tube
A/SA–268	S44735	S44735	75 (515)	10J	1	102	150	7.1	29Cr–4Mo–Ti	Smls. & welded tube
A/SA–268	29–4–2	S44800	80 (550)	10K	1	102	150	7.1	29Cr–4Mo–2Ni	Smls. & welded tube
A269	TP304	S30400	...	8	1	102	130	8.1	18Cr–8Ni	Smls. & welded tube
A269	TP304L	S30403	...	8	1	102	130	8.1	18Cr–8Ni	Smls. & welded tube

Copyrighted material licensed to Fermi National Laboratory by Clarivate Analytics (US) LLC, subscriptions.techstreet.com, downloaded on 2020-09-23 17:45:20 +0000 by Fermi National Laboratory User.
No further reproduction or distribution is permitted.

Table QW/QB-422
Ferrous and Nonferrous P-Numbers
Grouping of Base Metals for Qualification (Cont'd)

Spec. No.	Designation, Type, or Grade	UNS No.	Minimum Specified Tensile, ksi (MPa)	Welding P-No.	Welding Group No.	Brazing P-No.	Brazing AWS B2.2 BM	ISO 15608 Group	Nominal Composition	Typical Product Form
						Ferrous (Cont'd)				
A269	TP316	S31600	...	8	1	102	130	8.1	16Cr–12Ni–2Mo	Smls. & welded tube
A269	TP316L	S31603	...	8	1	102	130	8.1	16Cr–12Ni–2Mo	Smls. & welded tube
A/SA–276	304	S30400	75 (515)	8	1	102	130	8.1	18Cr–8Ni	Bars & shapes
A/SA–276	304L	S30403	70 (485)	8	1	102	130	8.1	18Cr–8Ni	Bars & shapes
A/SA–276	314	S31400	...	8	2	102	130	8.2	24Cr–20Ni–Si	Bars & shapes
A/SA–276	316	S31600	75 (515)	8	1	102	130	8.1	16Cr–12Ni–2Mo	Bars & shapes
A/SA–276	316L	S31603	70 (485)	8	1	102	130	8.1	16Cr–12Ni–2Mo	Bars & shapes
A/SA–276	410	S41000	70 (485)	6	1	102	150	7.2	13Cr	Bars & shapes
A/SA–283	A	K01400	45 (310)	1	1	101	100	1.1	C	Plate
A/SA–283	B	K01702	50 (345)	1	1	101	100	1.1	C	Plate
A/SA–283	C	K02401	55 (380)	1	1	101	100	1.1	C	Plate
A/SA–283	D	K02702	60 (415)	1	1	101	100	1.1	C	Plate
A/SA–285	A	K01700	45 (310)	1	1	101	100	1.1	C	Plate
A/SA–285	B	K02200	50 (345)	1	1	101	100	1.1	C	Plate
A/SA–285	C	K02801	55 (380)	1	1	101	100	11.1	C	Plate
A/SA–299	A	K02803	75 (515)	1	2	101	100	11.1	C–Mn–Si	Plate
A/SA–299	B	K02803	80 (550)	1	3	101	100	11.1	C–Mn–Si	Plate
A/SA–302	A	K12021	75 (515)	3	2	101	100	1.1	Mn–0.5Mo	Plate
A/SA–302	B	K12022	80 (550)	3	3	101	100	1.2	Mn–0.5Mo	Plate
A/SA–302	C	K12039	80 (550)	3	3	101	100	...	Mn–0.5Mo–0.5Ni	Plate
A/SA–302	D	K12054	80 (550)	3	3	101	100	...	Mn–0.5Mo–0.75Ni	Plate
A/SA–312	N08367	N08367	95 (655)	45	...	111	420	8.2	46Fe–24Ni–21Cr–6Mo–N	Smls. & welded pipe > 0.1875 in. (5 mm)
A/SA–312	N08367	N08367	100 (690)	45	...	111	420	8.2	46Fe–24Ni–21Cr–6Mo–N	Smls. & welded pipe ≤ 0.1875 in. (5 mm)
A/SA–312	...	N08904	71 (490)	45	...	111	420	8.2	44Fe–25Ni–21Cr–Mo	Smls. & welded pipe
A/SA–312	TPXM–19	S20910	100 (690)	8	3	102	130	8.3	22Cr–13Ni–5Mn	Smls. & welded pipe
A/SA–312	TPXM–11	S21904	90 (620)	8	3	102	130	8.3	21Cr–6Ni–9Mn	Smls. & welded pipe
A/SA–312	TPXM–29	S24000	100 (690)	8	3	102	130	8.3	18Cr–3Ni–12Mn	Smls. & welded pipe
A/SA–312	TP304	S30400	75 (515)	8	1	102	130	8.1	18Cr–8Ni	Smls. & welded pipe
A/SA–312	TP304L	S30403	70 (485)	8	1	102	130	8.1	18Cr–8Ni	Smls. & welded pipe
A/SA–312	TP304H	S30409	75 (515)	8	1	102	130	8.1	18Cr–8Ni	Smls. & welded pipe
A/SA–312	TP304N	S30451	80 (550)	8	1	102	130	8.1	18Cr–8Ni–N	Smls. & welded pipe

Copyrighted material licensed to Fermi National Laboratory by Clarivate Analytics (US) LLC, subscriptions.techstreet.com, downloaded on 2020-09-23 17:45:20 +0000 by Fermi National Laboratory User.
No further reproduction or distribution is permitted.

Table QW/QB-422
Ferrous and Nonferrous P-Numbers
Grouping of Base Metals for Qualification (Cont'd)

Spec. No.	Designation, Type, or Grade	UNS No.	Minimum Specified Tensile, ksi (MPa)	Welding P-No.	Welding Group No.	Brazing P-No.	Brazing AWS B2.2 BM	ISO 15608 Group	Nominal Composition	Typical Product Form
						Ferrous (Cont'd)				
A/SA–312	TP304LN	S30453	75 (515)	8	1	102	130	8.1	18Cr–8Ni–N	Smls. & welded pipe
A/SA–312	S30600	S30600	78 (540)	8	1	102	130	8.1	18Cr–15Ni–4Si	Smls. & welded pipe
A/SA–312	S30815	S30815	87 (600)	8	2	102	130	8.2	21Cr–11Ni–N	Smls. & welded pipe
A/SA–312	TP309S	S30908	75 (515)	8	2	102	130	8.2	23Cr–12Ni	Smls. & welded pipe
A/SA–312	TP309H	S30909	75 (515)	8	2	102	130	8.2	23Cr–12Ni	Smls. & welded pipe
A/SA–312	TP309Cb	S30940	75 (515)	8	2	102	130	8.2	23Cr–12Ni–Cb	Smls. & welded pipe
A/SA–312	TP309HCb	S30941	75 (515)	8	2	102	130	8.2	23Cr–12Ni–Cb	Smls. & welded pipe
A/SA–312	TP310S	S31008	75 (515)	8	2	102	130	8.2	25Cr–20Ni	Smls. & welded pipe
A/SA–312	TP310H	S31009	75 (515)	8	2	102	130	8.2	25Cr–20Ni	Smls. & welded pipe
A/SA–312	TP310Cb	S31040	75 (515)	8	2	102	130	8.2	25Cr–20Ni–Cb	Smls. & welded pipe
A/SA–312	TP310HCb	S31041	75 (515)	8	2	102	130	8.2	25Cr–20Ni–Cb	Smls. & welded pipe
A/SA–312	TP310MoLN	S31050	78 (540)	8	2	102	130	8.2	25Cr–22Ni–2Mo–N	Smls. & welded pipe, $t > 1/4$ in. (6 mm)
A/SA–312	TP310MoLN	S31050	84 (580)	8	2	102	130	8.2	25Cr–22Ni–2Mo–N	Smls. & welded pipe, $t \leq 1/4$ in. (6 mm)
A/SA–312	S31254	S31254	95 (655)	8	4	102	130	8.2	20Cr–18Ni–6Mo	Smls. & welded pipe, $t > 3/16$ in. (5 mm)
A/SA–312	S31254	S31254	98 (675)	8	4	102	130	8.2	20Cr–18Ni–6Mo	Smls. & welded pipe, $t \leq 3/16$ in. (5 mm)
A/SA–312	TP316	S31600	75 (515)	8	1	102	130	8.1	16Cr–12Ni–2Mo	Smls. & welded pipe
A/SA–312	TP316L	S31603	70 (485)	8	1	102	130	8.1	16Cr–12Ni–2Mo	Smls. & welded pipe
A/SA–312	TP316H	S31609	75 (515)	8	1	102	130	8.1	16Cr–12Ni–2Mo	Smls. & welded pipe
A/SA–312	TP316Ti	S31635	75 (515)	8	1	102	130	8.1	16Cr–12Ni–2Mo–Ti	Smls. & welded pipe
A/SA–312	TP316N	S31651	80 (550)	8	1	102	130	8.1	16Cr–12Ni–2Mo–N	Smls. & welded pipe
A/SA–312	TP316LN	S31653	75 (515)	8	1	102	130	8.1	16Cr–12Ni–2Mo–N	Smls. & welded pipe
A/SA–312	TP317	S31700	75 (515)	8	1	102	130	8.1	18Cr–13Ni–3Mo	Smls. & welded pipe
A/SA–312	TP317L	S31703	75 (515)	8	1	102	130	8.1	18Cr–13Ni–3Mo	Smls. & welded pipe
A/SA–312	S31725	S31725	75 (515)	8	4	102	130	8.1	19Cr–15Ni–4Mo	Smls. & welded pipe
A/SA–312	S31726	S31726	80 (550)	8	4	102	130	8.1	19Cr–15.5Ni–4Mo	Smls. & welded pipe
A/SA–312	...	S32053	93 (640)	8	4	102	130	8.2	23Cr–25Ni–5.5Mo–N	Smls. & welded pipe
A/SA–312	TP321	S32100	70 (485)	8	1	102	140	8.1	18Cr–10Ni–Ti	Smls. pipe > 3/8 in. (10 mm)
A/SA–312	TP321	S32100	75 (515)	8	1	102	140	8.1	18Cr–10Ni–Ti	Smls. pipe ≤ 3/8 in. (10 mm)
A/SA–312	TP321	S32100	75 (515)	8	1	102	140	8.1	18Cr–10Ni–Ti	Welded pipe
A/SA–312	TP321H	S32109	70 (485)	8	1	102	140	8.1	18Cr–10Ni–Ti	Smls. pipe > 3/8 in. (10 mm)
A/SA–312	TP321H	S32109	75 (515)	8	1	102	140	8.1	18Cr–10Ni–Ti	Smls. pipe ≤ 3/8 in. (10 mm)
A/SA–312	TP321H	S32109	75 (515)	8	1	102	140	8.1	18Cr–10Ni–Ti	Welded pipe
A/SA–312	S32615	S32615	80 (550)	8	1	102	130	8.1	18Cr–20Ni–5.5Si	Smls. & welded pipe
A/SA–312	S34565	S34565	115 (795)	8	4	102	130	8.3	24Cr–17Ni–6Mn–4.5Mo–N	Smls. & welded pipe
A/SA–312	TP347	S34700	75 (515)	8	1	102	130	8.1	18Cr–10Ni–Cb	Smls. & welded pipe
A/SA–312	TP347H	S34709	75 (515)	8	1	102	130	8.1	18Cr–10Ni–Cb	Smls. & welded pipe
A/SA–312	TP347LN	S34751	75 (515)	8	1	102	130	8.1	18Cr–10Ni–Cb–N	Smls. & welded pipe

Copyrighted material licensed to Fermi National Laboratory by Clarivate Analytics (US) LLC, subscriptions.techstreet.com, downloaded on 2020-09-23 17:45:20 +0000 by Fermi National Laboratory User.
No further reproduction or distribution is permitted.

Table QW/QB-422
Ferrous and Nonferrous P-Numbers
Grouping of Base Metals for Qualification (Cont'd)

Spec. No.	Designation, Type, or Grade	UNS No.	Minimum Specified Tensile, ksi (MPa)	Welding P-No.	Welding Group No.	Brazing P-No.	Brazing AWS B2.2 BM	ISO 15608 Group	Nominal Composition	Typical Product Form
						Ferrous (Cont'd)				
A/SA–312	TP348	S34800	75 (515)	8	1	102	130	8.1	18Cr–10Ni–Cb	Smls. & welded pipe
A/SA–312	TP348H	S34809	75 (515)	8	1	102	130	8.1	18Cr–10Ni–Cb	Smls. & welded pipe
A/SA–312	TPXM–15	S38100	75 (515)	8	1	102	130	8.1	18Cr–18Ni–2Si	Smls. & welded pipe
A/SA–333	10	...	80 (550)	1	3	101	100	11.1	C–Mn–Si	Smls. & welded pipe
A/SA–333	6	K03006	60 (415)	1	1	101	100	11.1	C–Mn–Si	Smls. & welded pipe
A/SA–333	1	K03008	55 (380)	1	1	101	100	11.1	C–Mn	Smls. & welded pipe
A/SA–333	4	K11267	60 (415)	4	2	102	120	4.1	0.75Cr–0.75Ni–Cu–Al	Smls. & welded pipe
A/SA–333	7	K21903	65 (450)	9A	1	101	100	9.1	2.5Ni	Smls. & welded pipe
A/SA–333	9	K22035	63 (435)	9A	1	101	100	9.1	2Ni–1Cu	Smls. & welded pipe
A/SA–333	3	K31918	65 (450)	9B	1	101	100	9.2	3.5Ni	Smls. & welded pipe
A/SA–333	8	K81340	100 (690)	11A	1	101	100	9.3	9Ni	Smls. & welded pipe
A/SA–334	6	K03006	60 (415)	1	1	101	100	11.1	C–Mn–Si	Welded tube
A/SA–334	1	K03008	55 (380)	1	1	101	100	11.1	C–Mn	Welded tube
A/SA–334	7	K21903	65 (450)	9A	1	101	100	9.1	2.5Ni	Welded tube
A/SA–334	9	K22035	63 (435)	9A	1	101	100	9.1	2Ni–1Cu	Welded tube
A/SA–334	3	K31918	65 (450)	9B	1	101	100	9.2	3.5Ni	Welded tube
A/SA–334	8	K81340	100 (690)	11A	1	101	100	9.3	9Ni	Welded tube
A/SA–335	P1	K11522	55 (380)	3	1	101	100	1.1	C–0.5Mo	Smls. pipe
A/SA–335	P2	K11547	55 (380)	3	1	101	100	4.2	0.5Cr–0.5Mo	Smls. pipe
A/SA–335	P12	K11562	60 (415)	4	1	102	110	5.1	1Cr–0.5Mo	Smls. pipe
A/SA–335	P15	K11578	60 (415)	3	1	101	100	...	1.5Si–0.5Mo	Smls. pipe
A/SA–335	P11	K11597	60 (415)	4	1	102	110	5.1	1.25Cr–0.5Mo–Si	Smls. pipe
A/SA–335	P22	K21590	60 (415)	5A	1	102	110	5.2	2.25Cr–1Mo	Smls. pipe
A/SA–335	P21	K31545	60 (415)	5A	1	102	110	5.2	3Cr–1Mo	Smls. pipe
A/SA–335	P5c	K41245	60 (415)	5B	1	102	120	5.3	5Cr–0.5Mo–Ti	Smls. pipe
A/SA–335	P5	K41545	60 (415)	5B	1	102	110	5.3	5Cr–0.5Mo	Smls. pipe
A/SA–335	P5b	K51545	60 (415)	5B	1	102	110	5.3	5Cr–0.5Mo–Si	Smls. pipe
A/SA–335	P91	K90901	85 (585)	15E	1	102	110	6.4	9Cr–1Mo–V	Smls. pipe
A/SA–335	P9	K90941	60 (415)	5B	1	102	110	5.4	9Cr–1Mo	Smls. pipe
A/SA–335	P92	K92460	90 (620)	15E	1	102	110	6.4	9Cr–2W	Smls. pipe
A/SA–336	F12	K11564	70 (485)	4	1	102	110	5.1	1Cr–0.5Mo	Forgings
A/SA–336	F11, Cl. 2	K11572	70 (485)	4	1	102	110	5.1	1.25Cr–0.5Mo–Si	Forgings
A/SA–336	F11, Cl. 3	K11572	75 (515)	4	1	102	110	5.1	1.25Cr–0.5Mo–Si	Forgings
A/SA–336	F11, Cl. 1	K11597	60 (415)	4	1	102	110	5.1	1.25Cr–0.5Mo–Si	Forgings

Copyrighted material licensed to Fermi National Laboratory by Clarivate Analytics (US) LLC, subscriptions.techstreet.com, downloaded on 2020-09-23 17:45:20 +0000 by Fermi National Laboratory User.
No further reproduction or distribution is permitted.

Table QW/QB-422
Ferrous and Nonferrous P-Numbers
Grouping of Base Metals for Qualification (Cont'd)

Spec. No.	Designation, Type, or Grade	UNS No.	Minimum Specified Tensile, ksi (MPa)	Welding P-No.	Welding Group No.	Brazing P-No.	Brazing AWS B2.2 BM	ISO 15608 Group	Nominal Composition	Typical Product Form
Ferrous (Cont'd)										
A/SA–336	F1	K12520	70 (485)	3	2	101	100	1.1	C–0.5Mo	Forgings
A/SA–336	F22, Cl. 1	K21590	60 (415)	5A	1	102	110	5.2	2.25Cr–1Mo	Forgings
A/SA–336	F22, Cl. 3	K21590	75 (515)	5A	1	102	110	5.2	2.25Cr–1Mo	Forgings
A/SA–336	F3VCb	K31390	85 (585)	5C	1	102	110	6.2	3Cr–1Mo–0.25V–Cb–Ca	Forgings
A/SA–336	F21, Cl. 1	K31545	60 (415)	5A	1	102	110	5.2	3Cr–1Mo	Forgings
A/SA–336	F21, Cl. 3	K31545	75 (515)	5A	1	102	110	5.2	3Cr–1Mo	Forgings
A/SA–336	F3V	K31830	85 (585)	5C	1	102	120	6.2	3Cr–1Mo–V–Ti–B	Forgings
A/SA–336	F22V	K31835	85 (585)	5C	1	102	110	6.2	2.25Cr–1Mo–V	Forgings
A/SA–336	F5	K41545	60 (415)	5B	1	102	110	5.3	5Cr–0.5Mo	Forgings
A/SA–336	F5A	K42544	80 (550)	5B	1	102	110	5.3	5Cr–0.5Mo	Forgings
A/SA–336	F91	K90901	90 (620)	15E	1	102	110	6.4	9Cr–1Mo–V	Forgings
A/SA–336	F9	K90941	85 (585)	5B	1	102	110	5.4	9Cr–1Mo	Forgings
A/SA–336	F92	K92460	90 (620)	15E	1	102	110	6.4	9Cr–2W	Forgings
A/SA–336	F6	S41000	85 (585)	6	3	102	150	7.2	13Cr	Forgings
A/SA–350	LF1	K03009	60 (415)	1	1	101	100	11.1	C–Mn–Si	Forgings
A/SA–350	LF2	K03011	70 (485)	1	2	101	100	11.1	C–Mn–Si	Forgings
A/SA–350	LF6, Cl. 2	K12202	75 (515)	1	3	101	100	4.1	C–Mn–Si–V	Forgings
A/SA–350	LF5 Cl. 1	K13050	60 (415)	9A	1	101	100	9.1	1.5Ni	Forgings
A/SA–350	LF5 Cl. 2	K13050	70 (485)	9A	1	101	100	9.1	1.5Ni	Forgings
A/SA–350	LF9	K22036	63 (435)	9A	1	101	100	9.1	2Ni–1Cu	Forgings
A/SA–350	LF3	K32025	70 (485)	9B	1	101	100	9.2	3.5Ni	Forgings
A/SA–351	CF3	J92500	70 (485)	8	1	102	130	8.1	18Cr–8Ni	Castings
A/SA–351	CF3A	J92500	77 (530)	8	1	102	130	8.1	18Cr–8Ni	Castings
A/SA–351	CF10	J92590	70 (485)	8	1	102	130	8.1	19Cr–9Ni–0.5Mo	Castings
A/SA–351	CF8	J92600	70 (485)	8	1	102	130	8.1	18Cr–8Ni	Castings
A/SA–351	CF8A	J92600	77 (530)	8	1	102	130	8.1	18Cr–8Ni	Castings
A/SA–351	CF8C	J92710	70 (485)	8	1	102	130	8.1	18Cr–10Ni–Cb	Castings
A/SA–351	CF3M	J92800	70 (485)	8	1	102	130	8.1	18Cr–12Ni–2Mo	Castings
A/SA–351	CE20N	J92802	80 (550)	8	2	102	130	8.2	25Cr–8Ni–N	Castings
A/SA–351	CF8M	J92900	70 (485)	8	1	102	130	8.1	18Cr–12Ni–2Mo	Castings
A/SA–351	CF10M	J92901	70 (485)	8	1	102	130	8.1	19Cr–9Ni–2Mo	Castings
A/SA–351	CF10MC	J92971	70 (485)	8	1	102	130	8.1	16Cr–14Ni–2Mo	Castings
A/SA–351	CG8M	J93000	75 (515)	8	1	102	130	8.1	19Cr–10Ni–3Mo	Castings
A/SA–351	CK3MCuN	J93254	80 (550)	8	4	102	130	8.2	20Cr–18Ni–6Mo	Castings
A/SA–351	CD3MWCuN	J93380	100 (690)	10H	1	102	145	10.2	25Cr–8Ni–3Mo–W–Cu–N	Castings
A/SA–351	CH8	J93400	65 (450)	8	2	102	130	8.2	25Cr–12Ni	Castings

Copyrighted material licensed to Fermi National Laboratory by Clarivate Analytics (US) LLC, subscriptions.techstreet.com, downloaded on 2020-09-23 17:45:20 +0000 by Fermi National Laboratory User.
No further reproduction or distribution is permitted.

Table QW/QB-422
Ferrous and Nonferrous P-Numbers
Grouping of Base Metals for Qualification (Cont'd)

Spec. No.	Designation, Type, or Grade	UNS No.	Minimum Specified Tensile, ksi (MPa)	Welding P-No.	Welding Group No.	Brazing P-No.	Brazing AWS B2.2 BM	ISO 15608 Group	Nominal Composition	Typical Product Form
						Ferrous (Cont'd)				
A/SA–351	CH10	J93401	70 (485)	8	2	102	130	8.2	25Cr–12Ni	Castings
A/SA–351	CH20	J93402	70 (485)	8	2	102	130	8.2	25Cr–12Ni	Castings
A/SA–351	CG6MMN	J93790	85 (585)	8	3	102	130	8.3	22Cr–12Ni–5Mn	Castings
A/SA–351	CK20	J94202	65 (450)	8	2	102	130	8.2	25Cr–20Ni	Castings
A/SA–351	HK30	J94203	65 (450)	8	2	102	130	8.2	25Cr–20Ni–0.5Mo	Castings
A/SA–351	HK40	J94204	62 (425)	8	2	102	130	8.2	25Cr–20Ni–0.5Mo	Castings
A/SA–351	CN3MN	J94651	80 (550)	45	...	111	420	8.2	46Fe–24Ni–21Cr–6Mo–Cu–N	Castings
A/SA–351	CN7M	N08007	62 (425)	45	...	111	420	8.2	28Ni–19Cr–Cu–Mo	Castings
A/SA–351	CT15C	N08151	63 (435)	45	...	111	420	45	32Ni–45Fe–20Cr–Cb	Castings
A/SA–351	HT30	N08603	65 (450)	45	...	111	420	45	35Ni–15Cr–0.5Mo	Castings
A/SA–352	LCA	J02504	60 (415)	1	1	101	100	11.1	C–Si	Castings
A/SA–352	LCC	J02505	70 (485)	1	2	101	100	11.1	C–Mn–Si	Castings
A/SA–352	LCB	J03003	65 (450)	1	1	101	100	1.1	C–Si	Castings
A/SA–352	LC1	J12522	65 (450)	3	1	101	100	1.1	C–0.5Mo	Castings
A/SA–352	LC2	J22500	70 (485)	9A	1	101	100	9.1	2.5Ni	Castings
A/SA–352	LC3	J31550	70 (485)	9B	1	101	100	9.3	3.5Ni	Castings
A/SA–352	LC4	J41500	70 (485)	9C	1	101	100	9.3	4.5Ni	Castings
A/SA–352	LC2–1	J42215	105 (725)	11A	5	102	110	9.2	3Ni–1.5Cr–0.5Mo	Castings
A/SA–352	CA6NM	J91540	110 (760)	6	4	102	150	7.2	13Cr–4Ni	Castings
A/SA–353	...	K81340	100 (690)	11A	1	101	100	9.3	9Ni	Plate
A356	1	J03502	70 (485)	1	2	101	100	11.1	C–Si	Castings
A356	8	J11697	80 (550)	4	1	102	110	6.2	1Cr–1Mo–V	Castings
A356	6	J12073	70 (485)	4	1	102	110	5.1	1.25Cr–0.5Mo	Castings
A356	2	J12523	65 (450)	3	1	101	100	1.1	C–0.5Mo	Castings
A356	9	J21610	85 (585)	4	1	102	110	6.2	1Cr–1Mo–V	Castings
A356	10	J22090	85 (585)	5A	1	102	110	5.2	2.25Cr–1Mo	Castings
A356	12A	J84090	85 (585)	15E	1	102	110	6.4	9Cr–1Mo–V	Castings
A/SA–358	N08367	N08367	95 (655)	45	...	111	420	8.2	46Fe–24Ni–21Cr–6Mo–N	Fusion welded pipe ≥ 0.1875 in. (5 mm)
A/SA–358	N08367	N08367	100 (690)	45	...	111	420	8.2	46Fe–24Ni–21Cr–6Mo–N	Fusion welded pipe < 0.1875 in. (5 mm)
A/SA–358	XM–19	S20910	100 (690)	8	3	102	130	8.3	22Cr–13Ni–5Mn	Fusion welded pipe
A/SA–358	XM–29	S24000	100 (690)	8	3	102	130	8.3	18Cr–3Ni–12Mn	Fusion welded pipe
A/SA–358	304	S30400	75 (515)	8	1	102	130	8.1	18Cr–8Ni	Fusion welded pipe

Copyrighted material licensed to Fermi National Laboratory by Clarivate Analytics (US) LLC, subscriptions.techstreet.com, downloaded on 2020-09-23 17:45:20 +0000 by Fermi National Laboratory User.
No further reproduction or distribution is permitted.

Table QW/QB-422
Ferrous and Nonferrous P-Numbers
Grouping of Base Metals for Qualification (Cont'd)

Spec. No.	Designation, Type, or Grade	UNS No.	Minimum Specified Tensile, ksi (MPa)	Welding P-No.	Welding Group No.	Brazing P-No.	Brazing AWS B2.2 BM	ISO 15608 Group	Nominal Composition	Typical Product Form
						Ferrous (Cont'd)				
A/SA–358	304L	S30403	70 (485)	8	1	102	130	8.1	18Cr–8Ni	Fusion welded pipe
A/SA–358	304H	S30409	75 (515)	8	1	102	130	8.1	18Cr–8Ni	Fusion welded pipe
A/SA–358	304N	S30451	80 (550)	8	1	102	130	8.1	18Cr–8Ni–N	Fusion welded pipe
A/SA–358	304LN	S30453	75 (515)	8	1	102	130	8.1	18Cr–8Ni–N	Fusion welded pipe
A/SA–358	S30815	S30815	87 (600)	8	2	102	130	8.2	21Cr–11Ni–N	Fusion welded pipe
A/SA–358	309S	S30908	75 (515)	8	2	102	130	8.2	23Cr–12Ni	Fusion welded pipe
A/SA–358	309Cb	S30940	75 (515)	8	2	102	130	8.2	23Cr–12Ni–Cb	Fusion welded pipe
A/SA–358	310S	S31008	75 (515)	8	2	102	130	8.2	25Cr–20Ni	Fusion welded pipe
A/SA–358	310Cb	S31040	75 (515)	8	2	102	130	8.2	25Cr–20Ni–Cb	Fusion welded pipe
A/SA–358	S31254	S31254	95 (655)	8	4	102	130	8.2	20Cr–18Ni–6Mo	Fusion welded pipe ≥ 0.1875 in. (5 mm)
A/SA–358	S31254	S31254	100 (690)	8	4	102	130	8.2	20Cr–18Ni–6Mo	Fusion welded pipe < 0.1875 in. (5 mm)
A/SA–358	...	S31266	109 (750)	45	...	102	420	8.2	24Cr–22Ni–6Mo–3Mn–Cu–W–N	Fusion welded pipe
A/SA–358	316	S31600	75 (515)	8	1	102	130	8.1	16Cr–12Ni–2Mo	Fusion welded pipe
A/SA–358	316L	S31603	70 (485)	8	1	102	130	8.1	16Cr–12Ni–2Mo	Fusion welded pipe
A/SA–358	316H	S31609	75 (515)	8	1	102	130	8.1	16Cr–12Ni–2Mo	Fusion welded pipe
A/SA–358	316N	S31651	80 (550)	8	1	102	130	8.1	16Cr–12Ni–2Mo–N	Fusion welded pipe
A/SA–358	316LN	S31653	75 (515)	8	1	102	130	8.1	16Cr–12Ni–2Mo–N	Fusion welded pipe
A/SA–358	S31725	S31725	75 (515)	8	4	102	130	8.1	19Cr–15Ni–4Mo	Fusion welded pipe
A/SA–358	S31726	S31726	80 (550)	8	4	102	130	8.1	19Cr–15.5Ni–4Mo	Fusion welded pipe
A/SA–358	...	S32053	93 (640)	8	4	102	130	8.2	23Cr–25Ni–5.5Mo–N	Fusion welded pipe
A/SA–358	321	S32100	75 (515)	8	1	102	140	8.1	18Cr–10Ni–Ti	Fusion welded pipe
A/SA–358	347	S34700	75 (515)	8	1	102	130	8.1	18Cr–10Ni–Cb	Fusion welded pipe
A/SA–358	348	S34800	75 (515)	8	1	102	130	8.1	18Cr–10Ni–Cb	Fusion welded pipe
A/SA–369	FPA	K02501	48 (330)	1	1	101	100	1.1	C–Si	Forged pipe
A/SA–369	FPB	K03006	60 (415)	1	1	101	100	1.1	C–Mn–Si	Forged pipe
A/SA–369	FP1	K11522	55 (380)	3	1	101	100	1.1	C–0.5Mo	Forged pipe
A/SA–369	FP2	K11547	55 (380)	3	1	101	100	4.2	0.5Cr–0.5Mo	Forged pipe
A/SA–369	FP12	K11562	60 (415)	4	1	102	110	5.1	1Cr–0.5Mo	Forged pipe
A/SA–369	FP11	K11597	60 (415)	4	1	102	110	5.1	1.25Cr–0.5Mo–Si	Forged pipe
A/SA–369	FP22	K21590	60 (415)	5A	1	102	110	5.2	2.25Cr–1Mo	Forged pipe
A/SA–369	FP21	K31545	60 (415)	5A	1	102	110	5.2	3Cr–1Mo	Forged pipe
A/SA–369	FP5	K41545	60 (415)	5B	1	102	110	5.3	5Cr–0.5Mo	Forged pipe
A/SA–369	FP91	K90901	85 (585)	15E	1	102	110	6.4	9Cr–1Mo–V	Forged pipe
A/SA–369	FP9	K90941	60 (415)	5B	1	102	110	5.4	9Cr–1Mo	Forged pipe
A/SA–369	FP92	K92460	90 (620)	15E	1	102	110	6.4	9Cr–2W	Forged pipe
A/SA–372	A	K03002	60 (415)	1	1	101	100	11.1	C–Si	Forgings

Copyrighted material licensed to Fermi National Laboratory by Clarivate Analytics (US) LLC, subscriptions.techstreet.com, downloaded on 2020-09-23 17:45:20 +0000 by Fermi National Laboratory User.
No further reproduction or distribution is permitted.

Table QW/QB-422
Ferrous and Nonferrous P-Numbers
Grouping of Base Metals for Qualification (Cont'd)

Spec. No.	Designation, Type, or Grade	UNS No.	Minimum Specified Tensile, ksi (MPa)	Welding P-No.	Welding Group No.	Brazing P-No.	Brazing AWS B2.2 BM	ISO 15608 Group	Nominal Composition	Typical Product Form
Ferrous (Cont'd)										
A/SA-372	B	K04001	75 (515)	1	2	101	100	11.1	C-Mn-Si	Forgings
A/SA-376	16-8-2H	S16800	75 (515)	8	1	102	130	8.1	16Cr-8Ni-2Mo	Smls. pipe
A/SA-376	TP304	S30400	70 (485)	8	1	102	130	8.1	18Cr-8Ni	Smls. pipe ≥ 0.812 in. (21 mm)
A/SA-376	TP304	S30400	75 (515)	8	1	102	130	8.1	18Cr-8Ni	Smls. pipe < 0.812 in. (21 mm)
A/SA-376	TP304H	S30409	75 (515)	8	1	102	130	8.1	18Cr-8Ni	Smls. pipe
A/SA-376	TP304N	S30451	80 (550)	8	1	102	130	8.1	18Cr-8Ni-N	Smls. pipe
A/SA-376	TP304LN	S30453	75 (515)	8	1	102	130	8.1	18Cr-8Ni-N	Smls. pipe
A/SA-376	TP316	S31600	75 (515)	8	1	102	130	8.1	16Cr-12Ni-2Mo	Smls. pipe
A/SA-376	TP316H	S31609	75 (515)	8	1	102	130	8.1	16Cr-12Ni-2Mo	Smls. pipe
A/SA-376	TP316N	S31651	80 (550)	8	1	102	130	8.1	16Cr-12Ni-2Mo-N	Smls. pipe
A/SA-376	TP316LN	S31653	75 (515)	8	1	102	130	8.1	16Cr-12Ni-2Mo-N	Smls. pipe
A/SA-376	S31725	S31725	75 (515)	8	4	102	130	8.1	19Cr-15Ni-4Mo	Smls. pipe
A/SA-376	S31726	S31726	80 (550)	8	4	102	130	8.1	19Cr-15.5Ni-4Mo	Smls. pipe
A/SA-376	TP321	S32100	70 (485)	8	1	102	140	8.1	18Cr-10Ni-Ti	Smls. pipe > $^3/_8$ in. (10 mm)
A/SA-376	TP321	S32100	75 (515)	8	1	102	140	8.1	18Cr-10Ni-Ti	Smls. pipe ≤ $^3/_8$ in. (10 mm)
A/SA-376	TP321H	S32109	70 (485)	8	1	102	140	8.1	18Cr-10Ni-Ti	Smls. pipe > $^3/_8$ in. (10 mm)
A/SA-376	TP321H	S32109	75 (515)	8	1	102	140	8.1	18Cr-10Ni-Ti	Smls. pipe ≤ $^3/_8$ in. (10 mm)
A/SA-376	S34565	S34565	115 (795)	8	4	102	130	8.3	24Cr-17Ni-6Mn-4.5Mo-N	Smls. pipe
A/SA-376	TP347	S34700	75 (515)	8	1	102	130	8.1	18Cr-10Ni-Cb	Smls. pipe
A/SA-376	TP347H	S34709	75 (515)	8	1	102	130	8.1	18Cr-10Ni-Cb	Smls. pipe
A/SA-376	TP348	S34800	75 (515)	8	1	102	130	8.1	18Cr-10Ni-Cb	Smls. pipe
A381	Y35	...	60 (415)	1	1	101	100	11.1	C	Welded pipe
A381	Y42	...	60 (415)	1	1	101	100	11.1	C	Welded pipe
A381	Y46	...	63 (435)	1	1	101	100	11.1	C	Welded pipe
A381	Y48	...	62 (425)	1	1	101	100	11.1	C	Welded pipe
A381	Y50	...	64 (440)	1	1	101	100	11.1	C	Welded pipe
A381	Y52	...	66 (455)	1	2	101	100	11.1	C	Welded pipe
A381	Y56	...	71 (490)	1	2	101	100	11.1	C	Welded pipe
A381	Y60	...	75 (515)	1	2	101	100	11.1	C	Welded pipe
A/SA-387	12, Cl. 1	K11757	55 (380)	4	1	102	110	5.1	1Cr-0.5Mo	Plate
A/SA-387	12, Cl. 2	K11757	65 (450)	4	1	102	110	5.1	1Cr-0.5Mo	Plate
A/SA-387	11, Cl. 1	K11789	60 (415)	4	1	102	110	5.1	1.25Cr-0.5Mo-Si	Plate
A/SA-387	11, Cl. 2	K11789	75 (515)	4	1	102	110	5.1	1.25Cr-0.5Mo-Si	Plate
A/SA-387	2, Cl. 1	K12143	55 (380)	3	1	101	100	4.2	0.5Cr-0.5Mo	Plate
A/SA-387	2, Cl. 2	K12143	70 (485)	3	2	101	100	4.2	0.5Cr-0.5Mo	Plate

Copyrighted material licensed to Fermi National Laboratory by Clarivate Analytics (US) LLC, subscriptions.techstreet.com, downloaded on 2020-09-23 17:45:20 +0000 by Fermi National Laboratory User.
No further reproduction or distribution is permitted.

Table QW/QB-422
Ferrous and Nonferrous P-Numbers
Grouping of Base Metals for Qualification (Cont'd)

Spec. No.	Designation, Type, or Grade	UNS No.	Minimum Specified Tensile, ksi (MPa)	Welding P-No.	Welding Group No.	Brazing P-No.	Brazing AWS B2.2 BM	ISO 15608 Group	Nominal Composition	Typical Product Form
Ferrous (Cont'd)										
A/SA–387	22, Cl. 1	K21590	60 (415)	5A	1	102	110	5.2	2.25Cr–1Mo	Plate
A/SA–387	22, Cl. 2	K21590	75 (515)	5A	1	102	110	5.2	2.25Cr–1Mo	Plate
A/SA–387	21, Cl. 1	K31545	60 (415)	5A	1	102	110	5.2	3Cr–1Mo	Plate
A/SA–387	21, Cl. 2	K31545	75 (515)	5A	1	102	110	5.2	3Cr–1Mo	Plate
A/SA–387	5, Cl. 1	K41545	60 (415)	5B	1	102	110	5.3	5Cr–0.5Mo	Plate
A/SA–387	5, Cl. 2	K41545	75 (515)	5B	1	102	110	5.3	5Cr–0.5Mo	Plate
A/SA–387	91, Cl. 2	K90901	85 (585)	15E	1	102	110	6.4	9Cr–1Mo–V	Plate
A/SA–387	9, Cl. 1	K90941	60 (415)	5B	1	102	110	5.4	9Cr–1Mo	Plate
A/SA–387	9, Cl. 2	K90941	75 (515)	5B	1	102	110	5.4	9Cr–1Mo	Plate
A403	...	N08367	95 (655)	45	...	111	420	8.2	46Fe–24Ni–21Cr–6Mo–N	Wrought piping fittings
A/SA–403	...	N08904	71 (490)	45	...	111	420	8.2	44Fe–25Ni–21Cr–Mo	Wrought piping fittings
A/SA–403	WPXM–19	S20910	100 (690)	8	3	102	130	8.3	22Cr–13Ni–5Mn	Wrought piping fittings
A/SA–403	WP304	S30400	75 (515)	8	1	102	130	8.1	18Cr–8Ni	Wrought piping fittings
A/SA–403	WP304L	S30403	70 (485)	8	1	102	130	8.1	18Cr–8Ni	Wrought piping fittings
A/SA–403	WP304H	S30409	75 (515)	8	1	102	130	8.1	18Cr–8Ni	Wrought piping fittings
A/SA–403	WP304N	S30451	80 (550)	8	1	102	130	8.1	18Cr–8Ni–N	Wrought piping fittings
A/SA–403	WP304LN	S30453	75 (515)	8	1	102	130	8.1	18Cr–8Ni–N	Wrought piping fittings
A/SA–403	WP309	S30900	75 (515)	8	2	102	130	8.2	23Cr–12Ni	Wrought piping fittings
A/SA–403	WP310S	S31008	75 (515)	8	2	102	130	8.2	25Cr–20Ni	Wrought piping fittings
A/SA–403	...	S31254	94 (650)	8	4	102	130	8.2	20Cr–18Ni–6Mo	Wrought piping fittings
A/SA–403	WP316	S31600	75 (515)	8	1	102	130	8.1	16Cr–12Ni–2Mo	Wrought piping fittings
A/SA–403	WP316L	S31603	70 (485)	8	1	102	130	8.1	16Cr–12Ni–2Mo	Wrought piping fittings
A/SA–403	WP316H	S31609	75 (515)	8	1	102	130	8.1	16Cr–12Ni–2Mo	Wrought piping fittings
A/SA–403	WP316N	S31651	80 (550)	8	1	102	130	8.1	16Cr–12Ni–2Mo–N	Wrought piping fittings
A/SA–403	WP316LN	S31653	75 (515)	8	1	102	130	8.1	16Cr–12Ni–2Mo–N	Wrought piping fittings
A/SA–403	WP317	S31700	75 (515)	8	1	102	130	8.1	18Cr–13Ni–3Mo	Wrought piping fittings
A/SA–403	WP317L	S31703	75 (515)	8	1	102	130	8.1	18Cr–13Ni–3Mo	Wrought piping fittings
A/SA–403	WP S31726	S31726	80 (550)	8	4	102	130	8.1	19Cr–15.5Ni–4Mo	Wrought piping fittings
A/SA–403	...	S32053	93 (640)	8	4	102	130	8.2	23Cr–25Ni–5.5Mo–N	Wrought piping fittings
A/SA–403	WP321	S32100	75 (515)	8	1	102	140	8.1	18Cr–10Ni–Ti	Wrought piping fittings
A/SA–403	WP321H	S32109	75 (515)	8	1	102	140	8.1	18Cr–10Ni–Ti	Wrought piping fittings
A/SA–403	S34565	S34565	115 (795)	8	4	102	130	8.3	24Cr–17Ni–6Mn–4.5Mo–N	Wrought piping fittings
A/SA–403	WP347	S34700	75 (515)	8	1	102	130	8.1	18Cr–10Ni–Cb	Wrought piping fittings
A/SA–403	WP347H	S34709	75 (515)	8	1	102	130	8.1	18Cr–10Ni–Cb	Wrought piping fittings
A/SA–403	WP348	S34800	75 (515)	8	1	102	130	8.1	18Cr–10Ni–Cb	Wrought piping fittings
A/SA–403	WP348H	S34809	75 (515)	8	1	102	130	8.1	18Cr–10Ni–Cb	Wrought piping fittings

Copyrighted material licensed to Fermi National Laboratory by Clarivate Analytics (US) LLC, subscriptions.techstreet.com, downloaded on 2020-09-23 17:45:20 +0000 by Fermi National Laboratory User.
No further reproduction or distribution is permitted.

Table QW/QB-422
Ferrous and Nonferrous P-Numbers
Grouping of Base Metals for Qualification (Cont'd)

Spec. No.	Designation, Type, or Grade	UNS No.	Minimum Specified Tensile, ksi (MPa)	Welding P-No.	Welding Group No.	Brazing P-No.	Brazing AWS B2.2 BM	ISO 15608 Group	Nominal Composition	Typical Product Form
						Ferrous (Cont'd)				
A/SA–403	WP S38815	S38815	78 (540)	8	1	102	130	8.1	14Cr–16Ni–6Si–Cu–Mo	Wrought piping fittings
A/SA–409	TP304	S30400	75 (515)	8	1	102	130	8.1	18Cr–8Ni	Welded pipe
A/SA–409	TP304L	S30403	70 (485)	8	1	102	130	8.1	18Cr–8Ni	Welded pipe
A/SA–409	S30815	S30815	87 (600)	8	2	102	130	8.2	21Cr–11Ni–N	Welded pipe
A/SA–409	TP309S	S30908	75 (515)	8	2	102	130	8.2	23Cr–12Ni	Welded pipe
A/SA–409	TP309Cb	S30940	75 (515)	8	2	102	130	8.2	23Cr–12Ni–Cb	Welded pipe
A/SA–409	TP310S	S31008	75 (515)	8	2	102	130	8.2	25Cr–20Ni	Welded pipe
A/SA–409	TP310Cb	S31040	75 (515)	8	2	102	130	8.2	25Cr–20Ni–Cb	Welded pipe
A/SA–409	S31254	S31254	94 (650)	8	4	102	130	8.2	20Cr–18Ni–6Mo	Welded pipe
A/SA–409	TP316	S31600	75 (515)	8	1	102	130	8.1	16Cr–12Ni–2Mo	Welded pipe
A/SA–409	TP316L	S31603	70 (485)	8	1	102	130	8.1	16Cr–12Ni–2Mo	Welded pipe
A/SA–409	TP317	S31700	75 (515)	8	1	102	130	8.1	18Cr–13Ni–3Mo	Welded pipe
A/SA–409	S31725	S31725	75 (515)	8	4	102	130	8.1	19Cr–15Ni–4Mo	Welded pipe
A/SA–409	S31726	S31726	80 (550)	8	4	102	130	8.1	19Cr–15.5Ni–4Mo	Welded pipe
A/SA–409	...	S32053	93 (640)	8	4	102	130	8.2	23Cr–25Ni–5.5Mo–N	Welded pipe
A/SA–409	TP321	S32100	75 (515)	8	1	102	140	8.1	18Cr–10Ni–Ti	Welded pipe
A/SA–409	S34565	S34565	115 (795)	8	4	102	130	8.3	24Cr–17Ni–6Mn–4.5Mo–N	Welded pipe
A/SA–409	TP347	S34700	75 (515)	8	1	102	130	8.1	18Cr–10Ni–Cb	Welded pipe
A/SA–409	TP348	S34800	75 (515)	8	1	102	130	8.1	18Cr–10Ni–Cb	Welded pipe
A/SA–414	A	K01501	45 (310)	1	1	101	100	1.1	C	Sheet
A/SA–414	B	K02201	50 (345)	1	1	101	100	1.1	C	Sheet
A/SA–414	C	K02503	55 (380)	1	1	101	100	1.1	C	Sheet
A/SA–414	D	K02505	60 (415)	1	1	101	100	1.1	C–Mn	Sheet
A/SA–414	E	K02704	65 (450)	1	1	101	100	11.1	C–Mn	Sheet
A/SA–414	F	K03102	70 (485)	1	2	101	100	11.1	C–Mn	Sheet
A/SA–414	G	K03103	75 (515)	1	2	101	100	11.1	C–Mn	Sheet
A/SA–420	WPL6	K03006	60 (415)	1	1	101	100	11.1	C–Mn–Si	Piping fittings
A/SA–420	WPL9	K22035	63 (435)	9A	1	101	100	9.1	2Ni–1Cu	Piping fittings
A/SA–420	WPL3	K31918	65 (450)	9B	1	101	100	9.2	3.5Ni	Piping fittings
A/SA–420	WPL8	K81340	100 (690)	11A	1	101	100	9.3	9Ni	Piping fittings
A/SA–423	1	K11535	60 (415)	4	2	102	110	5.1	0.75Cr–0.5Ni–Cu	Smls. & welded tube
A/SA–423	2	K11540	60 (415)	4	2	102	100	5.1	0.75Ni–0.5Cu–Mo	Smls. & welded tube
A/SA–426	CP15	J11522	60 (415)	3	1	101	100	1.1	C–0.5Mo–Si	Centrifugal cast pipe
A/SA–426	CP2	J11547	60 (415)	3	1	101	100	4.2	0.5Cr–0.5Mo	Centrifugal cast pipe

Copyrighted material licensed to Fermi National Laboratory by Clarivate Analytics (US) LLC, subscriptions.techstreet.com, downloaded on 2020-09-23 17:45:20 +0000 by Fermi National Laboratory User.
No further reproduction or distribution is permitted.

Table QW/QB-422
Ferrous and Nonferrous P-Numbers
Grouping of Base Metals for Qualification (Cont'd)

Spec. No.	Designation, Type, or Grade	UNS No.	Minimum Specified Tensile, ksi (MPa)	Welding P-No.	Welding Group No.	Brazing P-No.	Brazing AWS B2.2 BM	ISO 15608 Group	Nominal Composition	Typical Product Form
						Ferrous (Cont'd)				
A/SA–426	CP12	J11562	60 (415)	4	1	102	110	5.1	1Cr–0.5Mo	Centrifugal cast pipe
A/SA–426	CP11	J12072	70 (485)	4	1	102	110	5.1	1.25Cr–0.5Mo	Centrifugal cast pipe
A/SA–426	CP1	J12521	65 (450)	3	1	101	100	1.1	C–0.5Mo	Centrifugal cast pipe
A/SA–426	CP22	J21890	70 (485)	5A	1	102	110	5.2	2.25Cr–1Mo	Centrifugal cast pipe
A/SA–426	CP21	J31545	60 (415)	5A	1	102	110	5.2	3Cr–1Mo	Centrifugal cast pipe
A/SA–426	CP5	J42045	90 (620)	5B	1	102	110	5.3	5Cr–0.5Mo	Centrifugal cast pipe
A/SA–426	CP5b	J51545	60 (415)	5B	1	102	110	5.3	5Cr–1.5Si–0.5Mo	Centrifugal cast pipe
A/SA–426	CP9	J82090	90 (620)	5B	1	102	110	5.4	9Cr–1Mo	Centrifugal cast pipe
A/SA–426	CPCA15	J91150	90 (620)	6	3	102	150	7.2	13Cr	Centrifugal cast pipe
A/SA–451	CPF3	J92500	70 (485)	8	1	102	130	8.1	18Cr–8Ni	Centrifugal cast pipe
A/SA–451	CPF3A	J92500	77 (530)	8	1	102	130	8.1	18Cr–8Ni	Centrifugal cast pipe
A/SA–451	CPF8	J92600	70 (485)	8	1	102	130	8.1	18Cr–8Ni	Centrifugal cast pipe
A/SA–451	CPF8A	J92600	77 (530)	8	1	102	130	8.1	18Cr–8Ni	Centrifugal cast pipe
A/SA–451	CPF8C	J92710	70 (485)	8	1	102	130	8.1	18Cr–10Ni–Cb	Centrifugal cast pipe
A/SA–451	CPF3M	J92800	70 (485)	8	1	102	130	8.1	18Cr–12Ni–2Mo	Centrifugal cast pipe
A/SA–451	CPE20N	J92802	80 (550)	8	2	102	130	8.2	25Cr–8Ni–N	Centrifugal cast pipe
A/SA–451	CPF8M	J92900	70 (485)	8	1	102	130	8.1	18Cr–12Ni–2Mo	Centrifugal cast pipe
A/SA–451	CPF10MC	J92971	70 (485)	8	1	102	130	8.1	16Cr–14Ni–2Mo	Centrifugal cast pipe
A/SA–451	CPH8	J93400	65 (450)	8	2	102	130	8.2	25Cr–12Ni	Centrifugal cast pipe
A/SA–451	CPH20	J93402	70 (485)	8	2	102	130	8.2	25Cr–12Ni	Centrifugal cast pipe
A/SA–451	CPK20	J94202	65 (450)	8	2	102	130	8.2	25Cr–20Ni	Centrifugal cast pipe
A/SA–455	...	K03300	70 (485)	1	2	101	100	11.2	C–Mn–Si	Plate > 0.580 in.–0.750 in. (15 mm–19 mm)
A/SA–455	...	K03300	73 (505)	1	2	101	100	11.2	C–Mn–Si	Plate > 0.375 in.–0.580 in. (10 mm–15 mm)
A/SA–455	...	K03300	75 (515)	1	2	101	100	11.2	C–Mn–Si	Plate, up to 0.375 in. (10 mm)
A/SA–479	...	N08367	95 (655)	45	...	111	420	8.2	46Fe–24Ni–21Cr–6Mo–N	Bars & shapes
A479	904L	N08904	71 (490)	45	...	111	420	8.2	44Fe–25Ni–21Cr–Mo	Bars & shapes
A/SA–479	XM–19	S20910	100 (690)	8	3	102	130	8.3	22Cr–13Ni–5Mn	Bars & shapes
A/SA–479	XM–17	S21600	90 (620)	8	3	102	130	8.3	19Cr–8Mn–6Ni–Mo–N	Bars & shapes
A/SA–479	XM–18	S21603	90 (620)	8	3	102	130	8.3	19Cr–8Mn–6Ni–Mo–N	Bars & shapes
A/SA–479	S21800	S21800	95 (655)	8	3	102	130	8.1	18Cr–8Ni–4Si–N	Bars & shapes
A/SA–479	XM–11	S21904	90 (620)	8	3	102	130	8.3	21Cr–6Ni–9Mn	Bars & shapes
A/SA–479	XM–29	S24000	100 (690)	8	3	102	130	8.3	18Cr–3Ni–12Mn	Bars & shapes

Copyrighted material licensed to Fermi National Laboratory by Clarivate Analytics (US) LLC, subscriptions.techstreet.com, downloaded on 2020-09-23 17:45:20 +0000 by Fermi National Laboratory User.
No further reproduction or distribution is permitted.

Table QW/QB-422
Ferrous and Nonferrous P-Numbers
Grouping of Base Metals for Qualification (Cont'd)

Spec. No.	Designation, Type, or Grade	UNS No.	Minimum Specified Tensile, ksi (MPa)	Welding P-No.	Welding Group No.	Brazing P-No.	Brazing AWS B2.2 BM	ISO 15608 Group	Nominal Composition	Typical Product Form
						Ferrous (Cont'd)				
A/SA–479	302	S30200	75 (515)	8	1	102	130	8.1	18Cr–8Ni	Bars & shapes
A/SA–479	304	S30400	75 (515)	8	1	102	130	8.1	18Cr–8Ni	Bars & shapes
A/SA–479	304L	S30403	70 (485)	8	1	102	130	8.1	18Cr–8Ni	Bars & shapes
A/SA–479	304H	S30409	75 (515)	8	1	102	130	8.1	18Cr–8Ni	Bars & shapes
A/SA–479	304N	S30451	80 (550)	8	1	102	130	8.1	18Cr–8Ni–N	Bars & shapes
A/SA–479	304LN	S30453	75 (515)	8	1	102	130	8.1	18Cr–8Ni–N	Bars & shapes
A/SA–479	S30600	S30600	78 (540)	8	1	102	130	8.1	18Cr–15Ni–4Si	Bars & shapes
A/SA–479	S30815	S30815	87 (600)	8	2	102	130	8.2	21Cr–11Ni–N	Bars & shapes
A/SA–479	309S	S30908	75 (515)	8	2	102	130	8.2	23Cr–12Ni	Bars & shapes
A/SA–479	309Cb	S30940	75 (515)	8	2	102	130	8.2	23Cr–12Ni–Cb	Bars & shapes
A/SA–479	310S	S31008	75 (515)	8	2	102	130	8.2	25Cr–20Ni	Bars & shapes
A/SA–479	310Cb	S31040	75 (515)	8	2	102	130	8.2	25Cr–20Ni–Cb	Bars & shapes
A/SA–479	S31254	S31254	95 (655)	8	4	102	130	8.2	20Cr–18Ni–6Mo	Bars & shapes
A/SA–479	316	S31600	75 (515)	8	1	102	130	8.1	16Cr–12Ni–2Mo	Bars & shapes
A/SA–479	316L	S31603	70 (485)	8	1	102	130	8.1	16Cr–12Ni–2Mo	Bars & shapes
A/SA–479	316H	S31609	75 (515)	8	1	102	130	8.1	16Cr–12Ni–2Mo	Bars & shapes
A/SA–479	316Ti	S31635	75 (515)	8	1	102	130	8.1	16Cr–12Ni–2Mo–Ti	Bars & shapes
A/SA–479	316Cb	S31640	75 (515)	8	1	102	130	8.1	16Cr–12Ni–2Mo–Cb	Bars & shapes
A/SA–479	316N	S31651	80 (550)	8	1	102	130	8.1	16Cr–12Ni–2Mo–N	Bars & shapes
A/SA–479	316LN	S31653	75 (515)	8	1	102	130	8.1	16Cr–12Ni–2Mo–N	Bars & shapes
A/SA–479	S31725	S31725	75 (515)	8	4	102	130	8.1	19Cr–15Ni–4Mo	Bars & shapes
A/SA–479	S31726	S31726	80 (550)	8	4	102	130	8.1	19Cr–15.5Ni–4Mo	Bars & shapes
A/SA–479	...	S31803	90 (620)	10H	1	102	145	10.1	22Cr–5Ni–3Mo–N	Bars & shapes
A/SA–479	...	S32053	93 (640)	8	4	102	130	8.2	23Cr–25Ni–5.5Mo–N	Bars & shapes
A/SA–479	321	S32100	75 (515)	8	1	102	140	8.1	18Cr–10Ni–Ti	Bars & shapes
A/SA–479	...	S32101	94 (650)	10H	1	102	145	10.1	21Cr–5Mn–1.5Ni–Cu–N	Bars & shapes
A/SA–479	321H	S32109	75 (515)	8	1	102	140	8.1	18Cr–10Ni–Ti	Bars & shapes
A/SA–479	...	S32202	94 (650)	10H	1	102	145	10.1	22Cr–2Ni–Mo–N	Bars & shapes
A/SA–479	...	S32205	95 (655)	10H	1	102	145	10.1	22Cr–5Ni–3Mo–N	Bars & shapes
A/SA–479	S32550	S32550	110 (760)	10H	1	102	145	10.2	25Cr–5Ni–3Mo–2Cu	Bars & shapes
A/SA–479	S32615	S32615	80 (550)	8	1	102	130	8.1	18Cr–20Ni–5.5Si	Bars & shapes
A/SA–479	S32750	S32750	116 (800)	10H	1	102	145	10.2	25Cr–7Ni–4Mo–N	Bars & shapes
A/SA–479	S32906	S32906	109 (750)	10H	1	102	145	10.2	29Cr–6.5Ni–2Mo–N	Bars & shapes
A/SA–479	...	S34565	115 (795)	8	4	102	130	8.3	24Cr–17Ni–6Mn–4.5Mo–N	Bars & shapes
A/SA–479	347	S34700	75 (515)	8	1	102	130	8.1	18Cr–10Ni–Cb	Bars & shapes
A/SA–479	347H	S34709	75 (515)	8	1	102	130	8.1	18Cr–10Ni–Cb	Bars & shapes
A/SA–479	348	S34800	75 (515)	8	1	102	130	8.1	18Cr–10Ni–Cb	Bars & shapes

Copyrighted material licensed to Fermi National Laboratory by Clarivate Analytics (US) LLC, subscriptions.techstreet.com, downloaded on 2020-09-23 17:45:20 +0000 by Fermi National Laboratory User.
No further reproduction or distribution is permitted.

Table QW/QB-422
Ferrous and Nonferrous P-Numbers
Grouping of Base Metals for Qualification (Cont'd)

Spec. No.	Designation, Type, or Grade	UNS No.	Minimum Specified Tensile, ksi (MPa)	Welding P-No.	Welding Group No.	Brazing P-No.	Brazing AWS B2.2 BM	ISO 15608 Group	Nominal Composition	Typical Product Form
						Ferrous (Cont'd)				
A/SA–479	348H	S34809	75 (515)	8	1	102	130	8.1	18Cr–10Ni–Cb	Bars & shapes
A/SA–479	...	S38815	78 (540)	8	1	102	130	8.1	14Cr–16Ni–6Si–Cu–Mo	Bars & shapes
A/SA–479	403	S40300	70 (485)	6	1	102	150	7.1	12Cr	Bars & shapes
A/SA–479	405	S40500	60 (415)	7	1	102	160	7.1	12Cr–Al	Bars & shapes
A/SA–479	410	S41000	70 (485)	6	1	102	150	7.2	13Cr	Bars & shapes
A/SA–479	414	S41400	115 (795)	6	4	102	150	7.2	12.5Cr–2Ni–Si	Bars & shapes
A/SA–479	S41500	S41500	115 (795)	6	4	102	150	7.2	13Cr–4.5Ni–Mo	Bars & shapes
A/SA–479	430	S43000	70 (485)	7	2	102	150	7.1	17Cr	Bars & shapes
A/SA–479	439	S43035	70 (485)	7	2	102	150	7.1	18Cr–Ti	Bars & shapes
A/SA–479	S44400	S44400	60 (415)	7	2	102	150	7.1	18Cr–2Mo	Bars & shapes
A/SA–479	XM–27	S44627	65 (450)	10I	1	102	150	7.1	27Cr–1Mo	Bars & shapes
A/SA–479	S44700	S44700	70 (485)	10J	1	102	150	7.1	29Cr–4Mo	Bars & shapes
A/SA–479	S44800	S44800	70 (485)	10K	1	102	150	7.1	29Cr–4Mo–2Ni	Bars & shapes
A/SA–479	...	S82441	99 (680)	10H	1	102	145	10.1	24Cr–4Ni–3Mn–1.5Mo–N	Bars ≥ $^{7}/_{16}$ in. (11 mm)
A/SA–479	...	S82441	107 (740)	10H	1	102	145	10.1	24Cr–4Ni–3Mn–1.5Mo–N	Bars < $^{7}/_{16}$ in. (11 mm)
A/SA–487	1, Cl. A	J13002	85 (585)	10A	1	101	100	2.1	Mn–V	Castings
A/SA–487	1, Cl. B	J13002	90 (620)	10A	1	101	100	2.1	Mn–V	Castings
A/SA–487	2, Cl. A	J13005	85 (585)	3	3	101	100	2.1	Mn–0.25Mo–V	Castings
A/SA–487	2, Cl. B	J13005	90 (620)	3	3	101	100	2.1	Mn–0.25Mo–V	Castings
A/SA–487	4, Cl. A	J13047	90 (620)	3	3	101	100	3.1	0.5Ni–0.5Cr–0.25Mo–V	Castings
A/SA–487	4, Cl. B	J13047	105 (725)	11A	3	101	100	3.1	0.5Ni–0.5Cr–0.25Mo–V	Castings
A/SA–487	4, Cl. E	J13047	115 (795)	11A	3	101	100	3.1	0.5Ni–0.5Cr–0.25Mo–V	Castings
A/SA–487	8, Cl. A	J22091	85 (585)	5C	1	102	110	5.2	2.25Cr–1Mo	Castings
A/SA–487	8, Cl. B	J22091	105 (725)	5C	4	102	110	5.2	2.25Cr–1Mo	Castings
A/SA–487	8, Cl. C	J22091	100 (690)	5C	4	102	110	5.2	2.25Cr–1Mo	Castings
A/SA–487	16, Cl. A	J31200	70 (485)	1	2	101	100	1.1	Low C–Mn–Ni	Castings
A/SA–487	CA15 Cl. C	J91150	90 (620)	6	3	102	150	7.2	13Cr	Castings
A/SA–487	CA15M Cl. A	J91151	90 (620)	6	3	102	150	7.2	13Cr–Mo	Castings
A/SA–487	CA15 Cl. B	J91171	90 (620)	6	3	102	150	7.2	13Cr	Castings
A/SA–487	CA15 Cl. D	J91171	100 (690)	6	3	102	150	7.2	13Cr	Castings
A/SA–487	CA6NM Cl. A	J91540	110 (760)	6	4	102	150	7.2	13Cr–4Ni	Castings
A/SA–487	CA6NM Cl. B	J91540	100 (690)	6	4	102	150	7.2	13Cr–4Ni	Castings
A/SA–494	M35–2	N04020	65 (450)	42	...	110	400	42	67Ni–30Cu–Fe–Si	Castings
A/SA–494	CY40	N06040	70 (485)	43	...	111	420	43	72Ni–15Cr–8Fe–Si	Castings
A/SA–494	CU5MCuC	N08826	75 (515)	45	...	111	420	45	42Ni–21.5Cr–3Mo–2.3Cu	Castings
A/SA–494	M30C	N24130	65 (450)	42	...	110	400	42	67Ni–30Cu–2Fe–Cb	Castings

Copyrighted material licensed to Fermi National Laboratory by Clarivate Analytics (US) LLC, subscriptions.techstreet.com, downloaded on 2020-09-23 17:45:20 +0000 by Fermi National Laboratory User.
No further reproduction or distribution is permitted.

Copyrighted material licensed to Fermi National Laboratory by Clarivate Analytics (US) LLC, subscriptions.techstreet.com, downloaded on 2020-09-23 17:45:20 +0000 by Fermi National Laboratory User.
No further reproduction or distribution is permitted.

Table QW/QB-422
Ferrous and Nonferrous P-Numbers
Grouping of Base Metals for Qualification (Cont'd)

Spec. No.	Designation, Type, or Grade	UNS No.	Minimum Specified Tensile, ksi (MPa)	Welding P-No.	Welding Group No.	Brazing P-No.	Brazing AWS B2.2 BM	ISO 15608 Group	Nominal Composition	Typical Product Form
						Ferrous (Cont'd)				
A/SA–494	M35–1	N24135	65 (450)	42	...	110	400	42	67Ni–30Cu–2Fe–Cb	Castings
A/SA–494	CX2MW	N26022	80 (550)	43	...	111	420	44	59Ni–22Cr–14Mo–4Fe–3W	Castings
A/SA–494	CW2M	N26455	72 (495)	43	...	111	420	43	66Ni–16Mo–16Cr–Fe–W	Castings
A/SA–494	CW6MC	N26625	70 (485)	43	...	111	420	43	60Ni–21.5Cr–9Mo–4Cb–Fe	Castings
A/SA–494	N7M	N30007	76 (525)	44	...	112	410	44	65Ni–31.5Mo–1.5Fe–Cr	Castings
A/SA–494	CW6M	N30107	72 (495)	44	...	112	420	44	56Ni–19Mo–18Cr–2Fe	Castings
A500	C	K02705	62 (425)	1	1	101	100	1.2	C	Smls. & welded tube
A500	B	K03000	58 (400)	1	1	101	100	11.1	C	Smls. & welded tube
A501	A	K03000	58 (400)	1	1	101	100	11.1	C	Smls. & welded tube
A501	B	K03000	70 (485)	1	2	101	100	1.2	C	Smls. & welded tube
A/SA–508	3, Cl. 1	K12042	80 (550)	3	3	101	100	3.1	0.75Ni–0.5Mo–Cr–V	Forgings
A/SA–508	3, Cl. 2	K12042	90 (620)	3	3	102	100	3.1	0.75Ni–0.5Mo–Cr–V	Forgings
A/SA–508	2, Cl. 1	K12766	80 (550)	3	3	101	100	3.1	0.75Ni–0.5Mo–0.3Cr–V	Forgings
A/SA–508	2, Cl. 2	K12766	90 (620)	3	3	101	100	3.1	0.75Ni–0.5Mo–0.3Cr–V	Forgings
A/SA–508	1	K13502	70 (485)	1	2	101	100	11.1	C	Forgings
A/SA–508	1A	K13502	70 (485)	1	2	101	100	11.1	C	Forgings
A/SA–508	22, Cl. 3	K21590	85 (585)	5C	1	102	110	5.2	2.25Cr–1Mo	Forgings
A/SA–508	4N, Cl. 1	K22375	105 (725)	11A	5	102	110	3.1	3.5Ni–1.75Cr–0.5Mo–V	Forgings
A/SA–508	4N, Cl. 2	K22375	115 (795)	11B	10	102	110	3.1	3.5Ni–1.75Cr–0.5Mo–V	Forgings
A/SA–508	4N, Cl. 3	K22375	90 (620)	3	3	102	110	3.1	3.5Ni–1.75Cr–0.5Mo–V	Forgings
A/SA–508	3VCb	K31390	85 (585)	5C	1	102	110	6.2	3Cr–1Mo–0.25V–Cb–Ca	Forgings
A/SA–508	3V	K31830	85 (585)	5C	1	102	120	6.2	3Cr–1Mo–V–Ti–B	Forgings
A/SA–508	5, Cl. 1	K42365	105 (725)	11A	5	102	110	3.1	3.5Ni–1.75Cr–0.5Mo–V	Forgings
A/SA–508	5, Cl. 2	K42365	115 (795)	11B	10	102	110	3.1	3.5Ni–1.75Cr–0.5Mo–V	Forgings
A/SA–513	1008	G10080	42 (290)	1	1	101	100	1.1	C	Tube
A/SA–513	1010	G10100	45 (310)	1	1	101	100	1.1	C	Tube
A/SA–513	1015	G10150	48 (330)	1	1	101	100	1.1	C	Tube
A513	1015 CW	G10150	...	1	1	101	100	1.1	C	Tube
A513	1020 CW	G10200	...	1	2	101	100	1.1	C	Tube
A513	1025 CW	G10250	...	1	2	101	100	1.2	C	Tube
A513	1026 CW	G10260	...	1	3	101	100	11.1	C	Tube
A514	Q	...	100 (690)	11B	9	102	100	3.1	1.3Ni–1.3Cr–0.5Mo–V	Plate > 2½ in.–6 in. (64 mm–152 mm), incl.

Table QW/QB-422
Ferrous and Nonferrous P-Numbers
Grouping of Base Metals for Qualification (Cont'd)

Spec. No.	Designation, Type, or Grade	UNS No.	Minimum Specified Tensile, ksi (MPa)	Welding P-No.	Welding Group No.	Brazing P-No.	Brazing AWS B2.2 BM	ISO 15608 Group	Nominal Composition	Typical Product Form
						Ferrous (Cont'd)				
A514	Q	...	110 (760)	11B	9	102	100	3.1	1.3Ni–1.3Cr–0.5Mo–V	Plate, 2½ in. (64 mm) max.
A514	F	K11576	110 (760)	11B	3	101	100	3.1	0.75Ni–0.5Cr–0.5Mo–V	Plate, 2½ in. (64 mm) max.
A514	B	K11630	110 (760)	11B	4	101	100	3.1	0.5Cr–0.2Mo–V	Plate, 1¼ in. (32 mm) max.
A514	A	K11856	110 (760)	11B	1	101	100	3.1	0.5Cr–0.25Mo–Si	Plate, 1¼ in. (32 mm) max.
A514	E	K21604	100 (690)	11B	2	102	110	3.1	1.75Cr–0.5Mo–Cu	Plate > 2½ in.–6 in. (64 mm–152 mm), incl.
A514	E	K21604	110 (760)	11B	2	102	110	3.1	1.75Cr–0.5Mo–Cu	Plate, 2½ in. (64 mm) max.
A514	P	K21650	100 (690)	11B	8	102	110	3.1	1.25Ni–1Cr–0.5Mo	Plate > 2½ in.–6 in. (64 mm–152 mm), incl.
A514	P	K21650	110 (760)	11B	8	102	110	3.1	1.25Ni–1Cr–0.5Mo	Plate, 2½ in. (64 mm) max.
A/SA–515	60	...	60 (415)	1	1	101	100	11.1	C–Si	Plate > 1 in. (25 mm)
A/SA–515	60	K02401	60 (415)	1	1	101	100	1.1	C	Plate ≤ 1 in. (25 mm)
A/SA–515	65	K02800	65 (450)	1	1	101	100	11.1	C–Si	Plate
A/SA–515	70	K03101	70 (485)	1	2	101	100	11.1	C–Si	Plate
A/SA–516	55	K01800	55 (380)	1	1	101	100	1.1	C–Si	Plate
A/SA–516	60	K02100	60 (415)	1	1	101	100	1.1	C–Mn–Si	Plate
A/SA–516	65	K02403	65 (450)	1	1	101	100	1.1	C–Mn–Si	Plate
A/SA–516	70	K02700	70 (485)	1	2	101	100	11.1	C–Mn–Si	Plate
A/SA–517	F	K11576	115 (795)	11B	3	101	100	3.1	0.75Ni–0.5Cr–0.5Mo–V	Plate ≤ 2½ in. (64 mm)
A/SA–517	B	K11630	115 (795)	11B	4	101	100	3.1	0.5Cr–0.2Mo–V	Plate ≤ 1¼ in. (32 mm)
A/SA–517	A	K11856	115 (795)	11B	1	101	100	3.1	0.5Cr–0.25Mo–Si	Plate ≤ 1¼ in. (32 mm)
A/SA–517	E	K21604	105 (725)	11B	2	102	110	3.1	1.75Cr–0.5Mo–Cu	Plate > 2½ in.–6 in. (64 mm–152 mm), incl.
A/SA–517	E	K21604	115 (795)	11B	2	102	110	3.1	1.75Cr–0.5Mo–Cu	Plate ≤ 2½ in. (64 mm)
A/SA–517	P	K21650	105 (725)	11B	8	102	110	3.1	1.25Ni–1Cr–0.5Mo	Plate > 2½ in.–4 in. (64 mm–102 mm), incl.
A/SA–517	P	K21650	115 (795)	11B	8	102	110	3.1	1.25Ni–1Cr–0.5Mo	Plate ≤ 2½ in. (64 mm)
A519	1018 CW	G10180	...	1	2	101	100	1.1	C	Tube
A519	1018 HR	G10180	...	1	1	101	100	1.1	C	Tube
A519	1020 CW	G10200	...	1	2	101	100	1.1	C	Tube
A519	1020 HR	G10200	...	1	1	101	100	1.1	C	Tube
A519	1022 CW	G10220	...	1	2	101	100	1.1	C	Tube
A519	1022 HR	G10220	...	1	1	101	100	1.1	C	Tube
A519	1025 CW	G10250	...	1	2	101	100	1.2	C	Tube

Copyrighted material licensed to Fermi National Laboratory by Clarivate Analytics (US) LLC, subscriptions.techstreet.com, downloaded on 2020-09-23 17:45:20 +0000 by Fermi National Laboratory User.
No further reproduction or distribution is permitted.

Table QW/QB-422
Ferrous and Nonferrous P-Numbers
Grouping of Base Metals for Qualification (Cont'd)

Spec. No.	Designation, Type, or Grade	UNS No.	Minimum Specified Tensile, ksi (MPa)	Welding P-No.	Welding Group No.	Brazing P-No.	Brazing AWS B2.2 BM	ISO 15608 Group	Nominal Composition	Typical Product Form
Ferrous (Cont'd)										
A519	1025 HR	G10250	...	1	1	101	100	1.1	C	Tube
A519	1026 CW	G10260	...	1	2	101	100	11.1	C	Tube
A519	1026 HR	G10260	...	1	1	101	100	11.1	C	Tube
A/SA–522	II	K71340	100 (690)	11A	1	101	100	9.3	8Ni	Forgings
A/SA–522	I	K81340	100 (690)	11A	1	101	100	9.3	9Ni	Forgings
A/SA–524	I	K02104	60 (415)	1	1	101	100	1.1	C–Mn–Si	Smls. pipe
A/SA–524	II	K02104	55 (380)	1	1	101	100	1.1	C–Mn–Si	Smls. pipe
A/SA–533	A, Cl. 1	K12521	80 (550)	3	3	101	100	3.1	Mn–0.5Mo	Plate
A/SA–533	A, Cl. 2	K12521	90 (620)	3	3	101	100	3.1	Mn–0.5Mo	Plate
A/SA–533	A, Cl. 3	K12521	100 (690)	11A	4	101	100	3.1	Mn–0.5Mo	Plate
A/SA–533	D, Cl. 1	K12529	80 (550)	3	3	101	100	3.1	Mn–0.5Mo–0.25Ni	Plate
A/SA–533	D, Cl. 2	K12529	90 (620)	3	3	101	100	3.1	Mn–0.5Mo–0.25Ni	Plate
A/SA–533	D, Cl. 3	K12529	100 (690)	11A	4	101	100	3.1	Mn–0.5Mo–0.25Ni	Plate
A/SA–533	B, Cl. 1	K12539	80 (550)	3	3	101	100	3.1	Mn–0.5Mo–0.5Ni	Plate
A/SA–533	B, Cl. 2	K12539	90 (620)	3	3	101	100	3.1	Mn–0.5Mo–0.5Ni	Plate
A/SA–533	B, Cl. 3	K12539	100 (690)	11A	4	101	100	3.2	Mn–0.5Mo–0.5Ni	Plate
A/SA–533	C, Cl. 1	K12554	80 (550)	3	3	101	100	3.1	Mn–0.5Mo–0.75Ni	Plate
A/SA–533	C, Cl. 2	K12554	90 (620)	3	3	101	100	3.1	Mn–0.5Mo–0.75Ni	Plate
A/SA–533	C, Cl. 3	K12554	100 (690)	11A	4	101	100	3.2	Mn–0.5Mo–0.75Ni	Plate
A/SA–533	E, Cl. 1	K12554	80 (550)	3	3	101	100	3.1	Mn–0.5Mo–0.75Ni	Plate
A/SA–533	E, Cl. 2	K12554	90 (620)	3	3	101	100	3.1	Mn–0.5Mo–0.75Ni	Plate
A/SA–537	Cl. 1	K12437	65 (450)	1	2	101	100	1.2	C–Mn–Si	Plate > 2½ in.–4 in. (64 mm–102 mm), incl.
A/SA–537	Cl. 1	K12437	70 (485)	1	2	101	100	1.2	C–Mn–Si	Plate, 2½ in. (64 mm) & under
A/SA–537	Cl. 2	K12437	70 (485)	1	3	101	100	1.2	C–Mn–Si	Plate > 4 in.–6 in. (102 mm–152 mm), incl.
A/SA–537	Cl. 2	K12437	75 (515)	1	3	101	100	1.2	C–Mn–Si	Plate > 2½ in.–4 in. (64 mm–102 mm), incl.
A/SA–537	Cl. 2	K12437	80 (550)	1	3	101	100	1.2	C–Mn–Si	Plate, 2½ in. (64 mm) & under
A/SA–537	Cl. 3	K12437	70 (485)	1	3	101	100	1.2	C–Mn–Si	Plate > 4 in. (102 mm)
A/SA–537	Cl. 3	K12437	75 (515)	1	3	101	100	1.2	C–Mn–Si	Plate, 2½ in. < t ≤ 4 in. (64 mm < t ≤ 102 mm)
A/SA–537	Cl. 3	K12437	80 (550)	1	3	101	100	1.2	C–Mn–Si	Plate ≤ 2½ in. (64 mm)
A/SA–541	1A	K03020	70 (485)	1	2	101	100	11.1	C–Mn–Si	Forgings

Copyrighted material licensed to Fermi National Laboratory by Clarivate Analytics (US) LLC, subscriptions.techstreet.com, downloaded on 2020-09-23 17:45:20 +0000 by Fermi National Laboratory User.
No further reproduction or distribution is permitted.

Table QW/QB-422
Ferrous and Nonferrous P-Numbers
Grouping of Base Metals for Qualification (Cont'd)

Spec. No.	Designation, Type, or Grade	UNS No.	Minimum Specified Tensile, ksi (MPa)	Welding P-No.	Welding Group No.	Brazing P-No.	Brazing AWS B2.2 BM	ISO 15608 Group	Nominal Composition	Typical Product Form
						Ferrous (Cont'd)				
A/SA–541	1	K03506	70 (485)	1	2	101	100	11.1	C–Si	Forgings
A/SA–541	11, Cl. 4	K11572	80 (550)	4	1	102	110	5.2	1.25Cr–0.5Mo–Si	Forgings
A/SA–541	3, Cl. 1	K12045	80 (550)	3	3	101	100	4.1	0.5Ni–0.5Mo–V	Forgings
A/SA–541	3, Cl. 2	K12045	90 (620)	3	3	101	100	4.1	0.5Ni–0.5Mo–V	Forgings
A/SA–541	2, Cl. 1	K12765	80 (550)	3	3	101	100	4.2	0.75Ni–0.5Mo–0.3Cr–V	Forgings
A/SA–541	2, Cl. 2	K12765	90 (620)	3	3	101	100	4.2	0.75Ni–0.5Mo–0.3Cr–V	Forgings
A/SA–541	22, Cl. 3	K21390	85 (585)	5C	1	102	110	5.2	2.25Cr–1Mo	Forgings
A/SA–541	22, Cl. 4	K21390	105 (725)	5C	4	102	110	5.2	2.25Cr–1Mo	Forgings
A/SA–541	22, Cl. 5	K21390	115 (795)	5C	5	102	110	5.2	2.25Cr–1Mo	Forgings
A/SA–541	3VCb	K31390	85 (585)	5C	1	102	110	6.2	3Cr–1Mo–0.25V–Cb–Ca	Forgings
A/SA–541	3V	K31830	85 (585)	5C	1	102	120	6.2	3Cr–1Mo–V–Ti–B	Forgings
A/SA–541	22V	K31835	85 (585)	5C	1	102	110	5.2	2.25Cr–1Mo–V	Forgings
A/SA–542	A, Cl. 1	K21590	105 (725)	5C	4	102	110	5.2	2.25Cr–1Mo	Plate
A/SA–542	A, Cl. 2	K21590	115 (795)	5C	5	102	110	5.2	2.25Cr–1Mo	Plate
A/SA–542	A, Cl. 3	K21590	95 (655)	5C	3	102	110	5.2	2.25Cr–1Mo	Plate
A/SA–542	A, Cl. 4	K21590	85 (585)	5C	1	102	110	5.2	2.25Cr–1Mo	Plate
A/SA–542	A, Cl. 4a	K21590	85 (585)	5C	1	102	110	5.2	2.25Cr–1Mo	Plate
A/SA–542	B, Cl. 1	K21590	105 (725)	5C	4	102	110	5.2	2.25Cr–1Mo	Plate
A/SA–542	B, Cl. 2	K21590	115 (795)	5C	5	102	110	5.2	2.25Cr–1Mo	Plate
A/SA–542	B, Cl. 3	K21590	95 (655)	5C	3	102	110	5.2	2.25Cr–1Mo	Plate
A/SA–542	B, Cl. 4	K21590	85 (585)	5C	1	102	110	5.2	2.25Cr–1Mo	Plate
A/SA–542	B, Cl. 4a	K21590	85 (585)	5C	1	102	110	5.2	2.25Cr–1Mo	Plate
A/SA–542	E, Cl. 4a	K31390	85 (585)	5C	1	102	110	6.2	3Cr–1Mo–0.25V–Cb–Ca	Plate
A/SA–542	C, Cl. 1	K31830	105 (725)	5C	4	102	120	6.2	3Cr–1Mo–V–Ti–B	Plate
A/SA–542	C, Cl. 2	K31830	115 (795)	5C	5	102	120	6.2	3Cr–1Mo–V–Ti–B	Plate
A/SA–542	C, Cl. 3	K31830	95 (655)	5C	3	102	120	6.2	3Cr–1Mo–V–Ti–B	Plate
A/SA–542	C, Cl. 4	K31830	85 (585)	5C	1	102	120	6.2	3Cr–1Mo–V–Ti–B	Plate
A/SA–542	C, Cl. 4a	K31830	85 (585)	5C	1	102	120	6.2	3Cr–1Mo–V–Ti–B	Plate
A/SA–542	D, Cl. 4a	K31835	85 (585)	5C	1	102	110	6.3	2.25Cr–1Mo–V	Plate
A/SA–543	C, Cl. 1	...	105 (725)	11A	5	102	110	3.1	2.75Ni–1.5Cr–0.5Mo	Plate
A/SA–543	C, Cl. 2	...	115 (795)	11B	10	102	110	3.1	2.75Ni–1.5Cr–0.5Mo	Plate
A/SA–543	C, Cl. 3	...	90 (620)	3	3	102	110	3.1	2.75Ni–1.5Cr–0.5Mo	Plate
A/SA–543	B, Cl. 1	K42339	105 (725)	11A	5	102	110	3.1	3Ni–1.75Cr–0.5Mo	Plate
A/SA–543	B, Cl. 2	K42339	115 (795)	11B	10	102	110	3.1	3Ni–1.75Cr–0.5Mo	Plate
A/SA–543	B, Cl. 3	K42339	90 (620)	3	3	102	110	3.1	3Ni–1.75Cr–0.5Mo	Plate

Copyrighted material licensed to Fermi National Laboratory by Clarivate Analytics (US) LLC, subscriptions.techstreet.com, downloaded on 2020-09-23 17:45:20 +0000 by Fermi National Laboratory User.
No further reproduction or distribution is permitted.

Table QW/QB-422
Ferrous and Nonferrous P-Numbers
Grouping of Base Metals for Qualification (Cont'd)

Spec. No.	Designation, Type, or Grade	UNS No.	Minimum Specified Tensile, ksi (MPa)	Welding P-No.	Welding Group No.	Brazing P-No.	Brazing AWS B2.2 BM	ISO 15608 Group	Nominal Composition	Typical Product Form
Ferrous (Cont'd)										
A/SA–553	III	...	100 (690)	11A	1	101	100	9.2	7Ni	Plate
A/SA–553	II	K71340	100 (690)	11A	1	101	100	9.3	8Ni	Plate
A/SA–553	I	K81340	100 (690)	11A	1	101	100	9.3	9Ni	Plate
A/SA–556	A2	K01807	47 (325)	1	1	101	100	1.1	C	Smls. tube
A/SA–556	B2	K02707	60 (415)	1	1	101	100	11.1	C–Si	Smls. tube
A/SA–556	C2	K03006	70 (485)	1	2	101	100	11.1	C–Mn–Si	Smls. tube
A/SA–557	A2	K01807	47 (325)	1	1	101	100	1.1	C	E.R.W. tube
A/SA–557	B2	K03007	60 (415)	1	1	101	100	11.1	C	E.R.W. tube
A/SA–557	C2	K03505	70 (485)	1	2	101	100	11.1	C–Mn	E.R.W. tube
A/SA–562	...	K11224	55 (380)	1	1	101	120	1.1	C–Mn–Ti	Plate
A/SA–572	42	...	60 (415)	1	1	101	100	1.2	C–Mn–Si	Plate & shapes
A/SA–572	50	...	65 (450)	1	1	101	100	1.2	C–Mn–Si	Plate & shapes
A/SA–572	55	...	70 (485)	1	2	101	100	1.3	C–Mn–Si	Plate & shapes
A/SA–572	60	...	75 (515)	1	2	101	100	11.1	C–Mn–Si	Plate & shapes
A/SA–572	65	...	80 (550)	1	3	101	100	1.3	C–Mn–Si	Plate & shapes
A573	58	...	58 (400)	1	1	101	100	11.1	C	Plate
A573	65	...	65 (450)	1	1	101	100	11.1	C	Plate
A573	70	...	70 (485)	1	2	101	100	11.1	C	Plate
A575	M 1008	...	...	1	1	101	100	1.1	C	Bar
A575	M 1010	...	...	1	1	101	100	1.1	C	Bar
A575	M 1012	...	...	1	1	101	100	1.1	C	Bar
A575	M 1015	...	...	1	1	101	100	1.1	C	Bar
A575	M 1017	...	...	1	1	101	100	1.1	C	Bar
A575	M 1020	...	...	1	1	101	100	11.1	C	Bar
A575	M 1023	...	...	1	1	101	100	11.1	C	Bar
A575	M 1025	...	...	1	1	101	100	11.1	C	Bar
A576	G10080	...	...	1	1	101	100	1.1	C	Bar
A576	G10100	...	...	1	1	101	100	1.1	C	Bar
A576	G10120	...	...	1	1	101	100	1.1	C	Bar
A576	G10150	...	...	1	1	101	100	1.1	C	Bar
A576	G10160	...	...	1	1	101	100	1.1	C	Bar
A576	G10170	...	...	1	1	101	100	1.1	C	Bar

Copyrighted material licensed to Fermi National Laboratory by Clarivate Analytics (US) LLC, subscriptions.techstreet.com, downloaded on 2020-09-23 17:45:20 +0000 by Fermi National Laboratory User.
No further reproduction or distribution is permitted.

Table QW/QB-422
Ferrous and Nonferrous P-Numbers
Grouping of Base Metals for Qualification (Cont'd)

Spec. No.	Designation, Type, or Grade	UNS No.	Minimum Specified Tensile, ksi (MPa)	Welding P-No.	Welding Group No.	Brazing P-No.	Brazing AWS B2.2 BM	ISO 15608 Group	Nominal Composition	Typical Product Form
						Ferrous (Cont'd)				
A576	G10180	...	...	1	1	101	100	1.1	C	Bar
A576	G10190	...	...	1	1	101	100	1.1	C	Bar
A576	G10200	...	...	1	1	101	100	1.1	C	Bar
A576	G10210	...	...	1	1	101	100	11.1	C	Bar
A576	G10220	...	...	1	1	101	100	11.1	C	Bar
A576	G10230	...	...	1	1	101	100	11.1	C	Bar
A576	G10250	...	...	1	1	101	100	11.1	C	Bar
A/SA–587	...	K11500	48 (330)	1	1	101	100	1.1	C	E.R.W. pipe
A588	A	K11430	63 (435)	3	1	101	100	1.4	Mn–0.5Cr–0.3Cu–Si–V	Plate & bar > 5 in.–8 in. (125 mm–200 mm), incl.
A588	A	K11430	67 (460)	3	1	101	100	1.4	Mn–0.5Cr–0.3Cu–Si–V	Plate & bar > 4 in.–5 in. (100 mm–125 mm), incl.
A588	A	K11430	70 (485)	3	1	101	100	1.4	Mn–0.5Cr–0.3Cu–Si–V	Shapes
A588	A	K11430	70 (485)	3	1	101	100	1.4	Mn–0.5Cr–0.3Cu–Si–V	Plate & bar ≤ 4 in. (100 mm)
A588	B	K12043	63 (435)	3	1	101	100	1.4	Mn–0.6Cr–0.3Cu–Si–V	Plate & bar > 5 in.–8 in. (125 mm–200 mm), incl.
A588	B	K12043	67 (460)	3	1	101	100	1.4	Mn–0.6Cr–0.3Cu–Si–V	Plate & bar > 4 in.–5 in. (100 mm–125 mm), incl.
A588	B	K12043	70 (485)	3	1	101	100	1.4	Mn–0.6Cr–0.3Cu–Si–V	Shapes
A588	B	K12043	70 (485)	3	1	101	100	1.4	Mn–0.6Cr–0.3Cu–Si–V	Plate & bar ≤ 4 in. (100 mm)
A/SA–592	F	K11576	105 (725)	11B	3	101	100	3.1	0.75Ni–0.5Cr–0.5Mo–V	Forgings, 2½ in.–4 in. (64 mm–102 mm), incl.
A/SA–592	F	K11576	115 (795)	11B	3	101	100	3.1	0.75Ni–0.5Cr–0.5Mo–V	Forgings, 2½ in. (64 mm) & under
A/SA–592	E	K11695	105 (725)	11B	2	102	110	3.1	1.75Cr–0.5Mo–Cu	Forgings, 2½ in.–4 in. (64 mm–102 mm), incl.
A/SA–592	E	K11695	115 (795)	11B	2	102	110	3.1	1.75Cr–0.5Mo–Cu	Forgings, 2½ in. (64 mm) & under
A/SA–592	A	K11856	115 (795)	11B	1	101	100	3.1	0.5Cr–0.25Mo–Si	Forgings, 1½ in. (38 mm) & under
A/SA–612	...	K02900	81 (560)	10C	1	101	100	1.3	C–Mn–Si	Plate > ½ in.–1 in. (13 mm–25 mm)
A/SA–612	...	K02900	83 (570)	10C	1	101	100	1.3	C–Mn–Si	Plate, ½ in. (13 mm) & under
A618	Ia	...	67 (460)	1	2	101	100	1.2	Mn–Cu–V	Tube > ¾ in.–1½ in. (19 mm–38 mm)
A618	Ia	...	70 (485)	1	2	101	100	1.2	Mn–Cu–V	Tube ≤ ¾ in. (19 mm)
A618	Ib	K02601	67 (460)	1	2	101	100	1.2	Mn–Cu–V	Tube > ¾ in.–1½ in. (19 mm–38 mm)

Copyrighted material licensed to Fermi National Laboratory by Clarivate Analytics (US) LLC, subscriptions.techstreet.com, downloaded on 2020-09-23 17:45:20 +0000 by Fermi National Laboratory User.
No further reproduction or distribution is permitted.

Table QW/QB-422
Ferrous and Nonferrous P-Numbers
Grouping of Base Metals for Qualification (Cont'd)

Spec. No.	Designation, Type, or Grade	UNS No.	Minimum Specified Tensile, ksi (MPa)	Welding P-No.	Welding Group No.	Brazing P-No.	Brazing AWS B2.2 BM	ISO 15608 Group	Nominal Composition	Typical Product Form
						Ferrous (Cont'd)				
A618	Ib	K02601	70 (485)	1	2	101	100	1.2	Mn–Cu–V	Tube ≤ 3/4 in. (19 mm)
A618	II	K12609	67 (460)	1	2	101	100	1.2	Mn–Cu–V	Tube > 3/4 in.–1 1/2 in. (19 mm–38 mm)
A618	II	K12609	70 (485)	1	2	101	100	1.2	Mn–Cu–V	Tube, 3/4 in. (19 mm) & under
A618	III	K12700	65 (450)	1	1	101	100	1.2	Mn–V	Tube
A633	A	K01802	63 (435)	1	1	101	100	1.1	Mn–Cb	Plate
A633	C	K12000	65 (450)	1	1	101	100	1.1	Mn–Cb	Plate > 2 1/2 in.–4 in. (64 mm–102 mm), incl.
A633	C	K12000	70 (485)	1	2	101	100	1.1	Mn–Cb	Plate to 2 1/2 in. (64 mm)
A633	D	K12037	65 (450)	1	1	101	100	1.1	C–Mn–Si	Plate > 2 1/2 in.–4 in. (64 mm–102 mm), incl.
A633	D	K12037	70 (485)	1	2	101	100	1.1	C–Mn–Si	Plate to 2 1/2 in. (64 mm)
A633	E	K12202	80 (550)	1	3	101	100	4.1	C–Mn–Si–V	Plate
A/SA–645	A	K41583	95 (655)	11A	2	101	100	9.2	5Ni–0.25Mo	Plate
A/SA–656	T3, 50	...	60 (415)	1	1	101	100	1.2	C–Mn–Si–V–Cb	Plate
A/SA–656	T3, 60	...	70 (485)	1	2	101	100	1.3	C–Mn–Si–V–Cb	Plate
A/SA–656	T3, 70	...	80 (550)	1	3	101	100	2.2	C–Mn–Si–V–Cb	Plate
A/SA–656	T3, 80	...	90 (620)	1	4	101	100	2.2	C–Mn–Si–V–Cb	Plate
A/SA–656	T7, 50	...	60 (415)	1	1	101	100	1.2	C–Mn–Si–V–Cb	Plate
A/SA–656	T7, 60	...	70 (485)	1	2	101	100	1.3	C–Mn–Si–V–Cb	Plate
A/SA–656	T7, 70	...	80 (550)	1	3	101	100	2.2	C–Mn–Si–V–Cb	Plate
A/SA–656	T7, 80	...	90 (620)	1	4	101	100	2.2	C–Mn–Si–V–Cb	Plate
A/SA–660	WCA	J02504	60 (415)	1	1	101	100	11.1	C–Si	Centrifugal cast pipe
A/SA–660	WCC	J02505	70 (485)	1	2	101	100	11.1	C–Mn–Si	Centrifugal cast pipe
A/SA–660	WCB	J03003	70 (485)	1	2	101	100	1.1	C–Si	Centrifugal cast pipe
A/SA–662	A	K01701	58 (400)	1	1	101	100	1.1	C–Mn–Si	Plate
A/SA–662	C	K02007	70 (485)	1	2	101	100	1.1	C–Mn–Si	Plate
A/SA–662	B	K02203	65 (450)	1	1	101	100	1.1	C–Mn–Si	Plate
A663	...	...	...	1	1	101	100	...	C	Bar
A/SA–666	201–1	S20100	75 (515)	8	3	102	130	8.3	17Cr–4Ni–6Mn	Plate, sheet & strip
A/SA–666	201–2	S20100	95 (655)	8	3	102	130	8.3	17Cr–4Ni–6Mn	Plate, sheet & strip
A/SA–666	XM–11	S21904	90 (620)	8	3	102	130	8.3	21Cr–6Ni–9Mn	Plate, sheet & strip
A/SA–666	302	S30200	75 (515)	8	1	102	130	8.1	18Cr–8Ni	Plate, sheet & strip

Copyrighted material licensed to Fermi National Laboratory by Clarivate Analytics (US) LLC, subscriptions.techstreet.com, downloaded on 2020-09-23 17:45:20 +0000 by Fermi National Laboratory User.
No further reproduction or distribution is permitted.

Table QW/QB-422
Ferrous and Nonferrous P-Numbers
Grouping of Base Metals for Qualification (Cont'd)

Spec. No.	Designation, Type, or Grade	UNS No.	Minimum Specified Tensile, ksi (MPa)	Welding P-No.	Welding Group No.	Brazing P-No.	Brazing AWS B2.2 BM	ISO 15608 Group	Nominal Composition	Typical Product Form
						Ferrous (Cont'd)				
A/SA–666	304	S30400	75 (515)	8	1	102	130	8.1	18Cr–8Ni	Plate, sheet & strip
A/SA–666	304L	S30403	70 (485)	8	1	102	130	8.1	18Cr–8Ni	Plate, sheet & strip
A/SA–666	304N	S30451	80 (550)	8	1	102	130	8.1	18Cr–8Ni–N	Plate, sheet & strip
A/SA–666	304LN	S30453	75 (515)	8	1	102	130	8.1	18Cr–8Ni–N	Plate, sheet & strip
A/SA–666	316	S31600	75 (515)	8	1	102	130	8.1	16Cr–12Ni–2Mo	Plate, sheet & strip
A/SA–666	316L	S31603	70 (485)	8	1	102	130	8.1	16Cr–12Ni–2Mo	Plate, sheet & strip
A/SA–666	316N	S31651	80 (550)	8	1	102	130	8.1	16Cr–12Ni–2Mo–N	Plate, sheet & strip
A/SA–671	CC60	K02100	60 (415)	1	1	101	100	1.1	C–Mn–Si	Fusion welded pipe
A/SA–671	CE55	K02202	55 (380)	1	1	101	100	11.1	C	Fusion welded pipe
A/SA–671	CB60	K02401	60 (415)	1	1	101	100	1.1	C	Fusion welded pipe
A/SA–671	CE60	K02402	60 (415)	1	1	101	100	11.1	C–Mn–Si	Fusion welded pipe
A/SA–671	CC65	K02403	65 (450)	1	1	101	100	1.1	C–Mn–Si	Fusion welded pipe
A/SA–671	CC70	K02700	70 (485)	1	2	101	100	11.1	C–Mn–Si	Fusion welded pipe
A/SA–671	CB65	K02800	65 (450)	1	1	101	100	11.1	C–Si	Fusion welded pipe
A/SA–671	CA55	K02801	55 (380)	1	1	101	100	11.1	C	Fusion welded pipe
A/SA–671	CK75	K02803	75 (515)	1	2	101	100	11.1	C–Mn–Si	Fusion welded pipe
A/SA–671	CB70	K03101	70 (485)	1	2	101	100	11.1	C–Si	Fusion welded pipe
A/SA–671	CD70	K12437	70 (485)	1	2	101	100	1.2	C–Mn–Si	Fusion welded pipe
A/SA–671	CD80	K12437	80 (550)	1	3	101	100	1.2	C–Mn–Si	Fusion welded pipe
A/SA–672	J80	...	80 (550)	3	3	101	100	3.1	Mn–0.5Mo–0.75Ni	Fusion welded pipe
A/SA–672	J90	...	90 (620)	3	3	101	100	3.1	Mn–0.5Mo–0.75Ni	Fusion welded pipe
A/SA–672	A45	K01700	45 (310)	1	1	101	100	1.1	C	Fusion welded pipe
A/SA–672	C55	K01800	55 (380)	1	1	101	100	1.1	C–Si	Fusion welded pipe
A/SA–672	B55	K02001	55 (380)	1	1	101	100	1.1	C–Si	Fusion welded pipe
A/SA–672	C60	K02100	60 (415)	1	1	101	100	1.1	C–Mn–Si	Fusion welded pipe
A/SA–672	A50	K02200	50 (345)	1	1	101	100	1.1	C	Fusion welded pipe
A/SA–672	E55	K02202	55 (380)	1	1	101	100	11.1	C	Fusion welded pipe
A/SA–672	B60	K02401	60 (415)	1	1	101	100	1.1	C	Fusion welded pipe
A/SA–672	E60	K02402	60 (415)	1	1	101	100	11.1	C–Mn–Si	Fusion welded pipe
A/SA–672	C65	K02403	65 (450)	1	1	101	100	1.1	C–Mn–Si	Fusion welded pipe
A/SA–672	C70	K02700	70 (485)	1	2	101	100	11.1	C–Mn–Si	Fusion welded pipe
A/SA–672	B65	K02800	65 (450)	1	1	101	100	11.1	C–Si	Fusion welded pipe
A/SA–672	A55	K02801	55 (380)	1	1	101	100	11.1	C	Fusion welded pipe
A/SA–672	N75	K02803	75 (515)	1	2	101	100	11.1	C–Mn–Si	Fusion welded pipe
A/SA–672	B70	K03101	70 (485)	1	2	101	100	11.1	C–Si	Fusion welded pipe
A/SA–672	L65	K11820	65 (450)	3	1	101	100	1.1	C–0.5Mo	Fusion welded pipe

Copyrighted material licensed to Fermi National Laboratory by Clarivate Analytics (US) LLC, subscriptions.techstreet.com, downloaded on 2020-09-23 17:45:20 +0000 by Fermi National Laboratory User.
No further reproduction or distribution is permitted.

Copyrighted material licensed to Fermi National Laboratory by Clarivate Analytics (US) LLC, subscriptions.techstreet.com, downloaded on 2020-09-23 17:45:20 +0000 by Fermi National Laboratory User.
No further reproduction or distribution is permitted.

Table QW/QB-422
Ferrous and Nonferrous P-Numbers
Grouping of Base Metals for Qualification (Cont'd)

Spec. No.	Designation, Type, or Grade	UNS No.	Minimum Specified Tensile, ksi (MPa)	Welding P-No.	Welding Group No.	Brazing P-No.	Brazing AWS B2.2 BM	ISO 15608 Group	Nominal Composition	Typical Product Form
Ferrous (Cont'd)										
A/SA–672	L70	K12020	70 (485)	3	2	101	100	1.2	C–0.5Mo	Fusion welded pipe
A/SA–672	H75	K12021	75 (515)	3	2	101	100	1.1	Mn–0.5Mo	Fusion welded pipe
A/SA–672	H80	K12022	80 (550)	3	3	101	100	1.2	Mn–0.5Mo	Fusion welded pipe
A/SA–672	L75	K12320	75 (515)	3	2	101	100	1.2	C–0.5Mo	Fusion welded pipe
A/SA–672	D70	K12437	70 (485)	1	2	101	100	1.2	C–Mn–Si	Fusion welded pipe
A/SA–672	D80	K12437	80 (550)	1	3	101	100	1.2	C–Mn–Si	Fusion welded pipe
A/SA–672	J100	K12521	100 (690)	11A	4	101	100	3.2	Mn–0.5Mo	Fusion welded pipe
A/SA–675	45	...	45 (310)	1	1	101	100	11.1	C	Bar
A/SA–675	50	...	50 (345)	1	1	101	100	11.1	C	Bar
A/SA–675	55	...	55 (380)	1	1	101	100	11.1	C	Bar
A/SA–675	60	...	60 (415)	1	1	101	100	11.1	C	Bar
A/SA–675	65	...	65 (450)	1	1	101	100	11.1	C	Bar
A/SA–675	70	...	70 (485)	1	2	101	100	11.1	C	Bar
A/SA–688	XM–29	S24000	100 (690)	8	3	102	130	8.3	18Cr–3Ni–12Mn	Welded tube
A/SA–688	TP304	S30400	75 (515)	8	1	102	130	8.1	18Cr–8Ni	Welded tube
A/SA–688	TP304L	S30403	70 (485)	8	1	102	130	8.1	18Cr–8Ni	Welded tube
A/SA–688	TP304N	S30451	80 (550)	8	1	102	130	8.1	18Cr–8Ni–N	Welded tube
A/SA–688	TP304LN	S30453	75 (515)	8	1	102	130	8.1	18Cr–8Ni–N	Welded tube
A/SA–688	TP316	S31600	75 (515)	8	1	102	130	8.1	16Cr–12Ni–2Mo	Welded tube
A/SA–688	TP316L	S31603	70 (485)	8	1	102	130	8.1	16Cr–12Ni–2Mo	Welded tube
A/SA–688	TP316N	S31651	80 (550)	8	1	102	130	8.1	16Cr–12Ni–2Mo–N	Welded tube
A/SA–688	TP316LN	S31653	75 (515)	8	1	102	130	8.1	16Cr–12Ni–2Mo–N	Welded tube
A/SA–691	CMS–75	K02803	75 (515)	1	2	101	100	11.1	C–Mn–Si	Fusion welded pipe
A/SA–691	1CR, Cl. 1	K11757	55 (380)	4	1	102	110	5.1	1Cr–0.5Mo	Fusion welded pipe
A/SA–691	1CR, Cl. 2	K11757	65 (450)	4	1	102	110	5.1	1Cr–0.5Mo	Fusion welded pipe
A/SA–691	1.25CR, Cl. 1	K11789	60 (415)	4	1	102	110	5.1	1.25Cr–0.5Mo–Si	Fusion welded pipe
A/SA–691	1.25CR, Cl. 2	K11789	75 (515)	4	1	102	110	5.1	1.25Cr–0.5Mo–Si	Fusion welded pipe
A/SA–691	CM–65	K11820	65 (450)	3	1	101	100	1.1	C–0.5Mo	Fusion welded pipe
A/SA–691	CM–70	K12020	70 (485)	3	2	101	100	1.2	C–0.5Mo	Fusion welded pipe
A/SA–691	0.5CR, Cl. 1	K12143	55 (380)	3	1	101	100	4.2	0.5Cr–0.5Mo	Fusion welded pipe
A/SA–691	0.5CR, Cl. 2	K12143	70 (485)	3	2	101	100	4.2	0.5Cr–0.5Mo	Fusion welded pipe
A/SA–691	CM–75	K12320	75 (515)	3	2	101	100	1.2	C–0.5Mo	Fusion welded pipe
A/SA–691	CMSH–70	K12437	65 (450)	1	2	101	100	1.2	C–Mn–Si	Fusion welded pipe > 2½ in.–4 in. (64 mm–102 mm)
A/SA–691	CMSH–70	K12437	70 (485)	1	2	101	100	1.2	C–Mn–Si	Fusion welded pipe ≤ 2½ in. (64 mm)

Table QW/QB-422
Ferrous and Nonferrous P-Numbers
Grouping of Base Metals for Qualification (Cont'd)

Spec. No.	Designation, Type, or Grade	UNS No.	Minimum Specified Tensile, ksi (MPa)	Welding P-No.	Welding Group No.	Brazing P-No.	Brazing AWS B2.2 BM	ISO 15608 Group	Nominal Composition	Typical Product Form
						Ferrous (Cont'd)				
A/SA–691	CMSH–80	K12437	75 (515)	1	3	101	100	1.2	C–Mn–Si	Fusion welded pipe > 2½ in.–4 in. (64 mm–102 mm)
A/SA–691	CMSH–80	K12437	80 (550)	1	3	101	100	1.2	C–Mn–Si	Fusion welded pipe ≤ 2½ in. (64 mm)
A/SA–691	2.25CR, Cl. 1	K21590	60 (415)	5A	1	102	110	5.2	2.25Cr–1Mo	Fusion welded pipe
A/SA–691	2.25CR, Cl. 2	K21590	75 (515)	5A	1	102	110	5.2	2.25Cr–1Mo	Fusion welded pipe
A/SA–691	3CR, Cl. 1	K31545	60 (415)	5A	1	102	110	5.2	3Cr–1Mo	Fusion welded pipe
A/SA–691	3CR, Cl. 2	K31545	75 (515)	5A	1	102	110	5.2	3Cr–1Mo	Fusion welded pipe
A/SA–691	5CR, Cl. 1	K41545	60 (415)	5B	1	102	110	5.3	5Cr–0.5Mo	Fusion welded pipe
A/SA–691	5CR, Cl. 2	K41545	75 (515)	5B	1	102	110	5.3	5Cr–0.5Mo	Fusion welded pipe
A/SA–691	91	K91560	85 (585)	15E	1	102	110	6.4	9Cr–1Mo–V	Fusion welded pipe
A694	F42	K03014	60 (415)	1	1	101	100	11.1	C–Mn	Forgings
A694	F46	K03014	60 (415)	1	1	101	100	11.1	C–Mn	Forgings
A694	F48	K03014	62 (425)	1	1	101	100	11.1	C–Mn	Forgings
A694	F50	K03014	64 (440)	1	1	101	100	11.1	C–Mn	Forgings
A694	F52	K03014	66 (455)	1	1	101	100	11.1	C–Mn	Forgings
A694	F56	K03014	68 (470)	1	2	101	100	11.1	C–Mn	Forgings
A694	F60	K03014	75 (515)	1	2	101	100	11.1	C–Mn	Forgings
A694	F65	K03014	77 (530)	1	2	101	100	11.1	C–Mn	Forgings
A694	F70	K03014	82 (565)	1	3	101	100	11.1	C–Mn	Forgings
A/SA–696	B	K03200	60 (415)	1	1	101	100	11.1	C–Mn–Si	Bar
A/SA–696	C	K03200	70 (485)	1	2	101	100	11.1	C–Mn–Si	Bar
A707	L1, Cl. 1	K02302	...	1	1	101	100	1.2	C–Mn	Forgings
A707	L1, Cl. 2	K02302	...	1	1	101	100	1.2	C–Mn	Forgings
A707	L2, Cl. 1	K03301	...	1	1	101	100	11.1	C–Mn	Forgings
A707	L2, Cl. 2	K03301	...	1	1	101	100	11.1	C–Mn	Forgings
A707	L2, Cl. 3	K03301	...	1	2	101	100	11.1	C–Mn	Forgings
A707	L3, Cl. 1	K12510	...	1	1	101	100	1.2	C–Mn–V–N	Forgings
A707	L3, Cl. 2	K12510	...	1	1	101	100	1.2	C–Mn–V–N	Forgings
A707	L3, Cl. 3	K12510	...	1	2	101	100	1.3	C–Mn–V–N	Forgings
A714	V	K22035	65 (450)	9A	1	102	100	9.1	2Ni–1Cu	Smls. & welded pipe
A714	V, E	K22035	65 (450)	9A	1	102	100	9.1	2Ni–1Cu	Smls. & welded pipe
A/SA–724	A	K11831	90 (620)	1	4	101	100	3.1	C–Mn–Si	Plate
A/SA–724	B	K12031	95 (655)	1	4	101	100	3.1	C–Mn–Si	Plate
A/SA–724	C	K12037	90 (620)	1	4	101	100	1.1	C–Mn–Si	Plate

Copyrighted material licensed to Fermi National Laboratory by Clarivate Analytics (US) LLC, subscriptions.techstreet.com, downloaded on 2020-09-23 17:45:20 +0000 by Fermi National Laboratory User.
No further reproduction or distribution is permitted.

Table QW/QB-422
Ferrous and Nonferrous P-Numbers
Grouping of Base Metals for Qualification (Cont'd)

Spec. No.	Designation, Type, or Grade	UNS No.	Minimum Specified Tensile, ksi (MPa)	Welding P-No.	Welding Group No.	Brazing P-No.	Brazing AWS B2.2 BM	ISO 15608 Group	Nominal Composition	Typical Product Form
						Ferrous (Cont'd)				
A/SA–727	...	K02506	60 (415)	1	1	101	100	11.1	C–Mn–Si	Forgings
A/SA–731	S41500	S41500	115 (795)	6	4	102	150	7.2	13Cr–4.5Ni–Mo	Smls. & welded pipe
A/SA–731	TP439	S43035	60 (415)	7	2	102	150	7.1	18Cr–Ti	Smls. & welded pipe
A/SA–731	18Cr–2Mo	S44400	60 (415)	7	2	102	150	7.1	18Cr–2Mo	Smls. & welded pipe
A/SA–731	TPXM–33	S44626	65 (450)	10I	1	102	150	7.1	27Cr–1Mo–Ti	Smls. & welded pipe
A/SA–731	TPXM–27	S44627	65 (450)	10I	1	102	150	7.1	27Cr–1Mo	Smls. & welded pipe
A/SA–731	S44660	S44660	85 (585)	10K	1	102	150	7.1	26Cr–3Ni–3Mo	Smls. & welded pipe
A/SA–731	S44700	S44700	80 (550)	10J	1	102	150	7.1	29Cr–4Mo	Smls. & welded pipe
A/SA–731	S44800	S44800	80 (550)	10K	1	102	150	7.1	29Cr–4Mo–2Ni	Smls. & welded pipe
A/SA–737	B	K12001	70 (485)	1	2	101	100	11.1	C–Mn–Si–Cb	Plate
A/SA–737	C	K12202	80 (550)	1	3	101	100	4.1	C–Mn–Si–V	Plate
A/SA–738	C	K02008	70 (485)	1	3	101	100	11.1	C–Mn–Si	Plate > 4 in.–6 in. (102 mm–152 mm), incl.
A/SA–738	C	K02008	75 (515)	1	3	101	100	11.1	C–Mn–Si	Plate > 2½ in.–4 in. (64 mm–102 mm), incl.
A/SA–738	C	K02008	80 (550)	1	3	101	100	11.1	C–Mn–Si	Plate, 2½ in. (64 mm) & under
A/SA–738	B	K12007	85 (585)	1	3	101	100	11.1	C–Mn–Si–Cb	Plate
A/SA–738	A	K12447	75 (515)	1	2	101	100	11.1	C–Mn–Si	Plate
A/SA–739	B11	K11797	70 (485)	4	1	102	110	5.1	1.25Cr–0.5Mo	Bar
A/SA–739	B22	K21390	75 (515)	5A	1	102	110	5.2	2.25Cr–1Mo	Bar
A/SA–765	IV	K02009	80 (550)	1	3	101	100	1.1	C–Mn–Si	Forgings
A/SA–765	I	K03046	60 (415)	1	1	101	100	11.1	C–Mn–Si	Forgings
A/SA–765	II	K03047	70 (485)	1	2	101	100	11.1	C–Mn–Si	Forgings
A/SA–765	III	K32026	70 (485)	9B	1	101	100	9.2	3.5Ni	Forgings
A/SA–789	S31200	S31200	100 (690)	10H	1	102	145	10.2	25Cr–6Ni–Mo–N	Smls. & welded tube
A/SA–789	S31260	S31260	100 (690)	10H	1	102	145	10.2	25Cr–6.5Ni–3Mo–N	Smls. & welded tube
A/SA–789	S31500	S31500	92 (635)	10H	1	102	145	10.1	18Cr–5Ni–3Mo–N	Smls. & welded tube
A/SA–789	S31803	S31803	90 (620)	10H	1	102	145	10.1	22Cr–5Ni–3Mo–N	Smls. & welded tube
A/SA–789	...	S32003	100 (690)	10H	1	102	145	10.1	21Cr–3.5Ni–Mo–N	Smls. & welded tube
A/SA–789	...	S32101	94 (650)	10H	1	102	145	10.1	21Cr–5Mn–1.5Ni–Cu–N	Smls. & welded tube > 0.187 in. (5 mm)
A/SA–789	...	S32101	101 (700)	10H	1	102	145	10.1	21Cr–5Mn–1.5Ni–Cu–N	Smls. & welded tube ≤ 0.187 in. (5 mm)
A/SA–789	...	S32202	94 (650)	10H	1	102	145	10.1	22Cr–2Ni–Mo–N	Smls. & welded tube
A/SA–789	...	S32205	95 (655)	10H	1	102	145	10.1	22Cr–5Ni–3Mo–N	Smls. & welded tube

Copyrighted material licensed to Fermi National Laboratory by Clarivate Analytics (US) LLC, subscriptions.techstreet.com, downloaded on 2020-09-23 17:45:20 +0000 by Fermi National Laboratory User.
No further reproduction or distribution is permitted.

Table QW/QB-422
Ferrous and Nonferrous P-Numbers
Grouping of Base Metals for Qualification (Cont'd)

Spec. No.	Designation, Type, or Grade	UNS No.	Minimum Specified Tensile, ksi (MPa)	Welding P-No.	Welding Group No.	Brazing P-No.	Brazing AWS B2.2 BM	ISO 15608 Group	Nominal Composition	Typical Product Form
						Ferrous (Cont'd)				
A/SA–789	S32304	S32304	87 (600)	10H	1	102	145	10.1	23Cr–4Ni–Mo–Cu–N	Smls. & welded tube > 1 in. (25 mm)
A/SA–789	S32304	S32304	100 (690)	10H	1	102	145	10.1	23Cr–4Ni–Mo–Cu–N	Smls. & welded tube ≤ 1 in. (25 mm)
A/SA–789	S32550	S32550	110 (760)	10H	1	102	145	10.2	25Cr–5Ni–3Mo–2Cu	Smls. & welded tube
A/SA–789	S32750	S32750	116 (800)	10H	1	102	145	10.2	25Cr–7Ni–4Mo–N	Smls. & welded tube
A/SA–789	S32760	S32760	109 (750)	10H	1	102	145	10.2	25Cr–8Ni–3Mo–W–Cu–N	Smls. & welded tube
A/SA–789	S32900	S32900	90 (620)	10H	1	102	145	10.2	26Cr–4Ni–Mo	Smls. & welded tube
A/SA–789	S32906	S32906	109 (750)	10H	1	102	145	10.2	29Cr–6.5Ni–2Mo–N	Smls. & welded tube ≥ 0.40 in. (10 mm)
A/SA–789	S32906	S32906	116 (800)	10H	1	102	145	10.2	29Cr–6.5Ni–2Mo–N	Smls. & welded tube < 0.40 in. (10 mm)
A/SA–789	S32950	S32950	100 (690)	10H	1	102	145	10.2	26Cr–4Ni–Mo–N	Smls. & welded tube
A/SA–789	S39274	S39274	116 (800)	10H	1	102	145	10.2	25Cr–7Ni–3Mo–2W–Cu–N	Smls. & welded tube
A/SA–789	...	S82441	99 (680)	10H	1	102	145	10.1	24Cr–4Ni–3Mn–1.5Mo–N	Smls. & welded tube ≥ 0.40 in. (10 mm)
A/SA–789	...	S82441	107 (740)	10H	1	102	145	10.1	24Cr–4Ni–3Mn–1.5Mo–N	Smls. & welded tube < 0.40 in. (10 mm)
A/SA–790	S31200	S31200	100 (690)	10H	1	102	145	10.2	25Cr–6Ni–Mo–N	Smls. & welded pipe
A/SA–790	S31260	S31260	100 (690)	10H	1	102	145	10.2	25Cr–6.5Ni–3Mo–N	Smls. & welded pipe
A/SA–790	S31500	S31500	92 (635)	10H	1	102	145	10.1	18Cr–5Ni–3Mo–N	Smls. & welded pipe
A/SA–790	S31803	S31803	90 (620)	10H	1	102	145	10.1	22Cr–5Ni–3Mo–N	Smls. & welded pipe
A/SA–790	...	S32003	90 (620)	10H	1	102	145	10.1	21Cr–3.5Ni–Mo–N	Smls. & welded pipe
A/SA–790	...	S32101	94 (650)	10H	1	102	145	10.1	21Cr–5Mn–1.5Ni–Cu–N	Smls. & welded pipe > 0.187 in. (5 mm)
A/SA–790	...	S32101	101 (700)	10H	1	102	145	10.1	21Cr–5Mn–1.5Ni–Cu–N	Smls. & welded pipe ≤ 0.187 in. (5 mm)
A/SA–790	...	S32202	94 (650)	10H	1	102	145	10.1	22Cr–2Ni–Mo–N	Smls. & welded pipe
A/SA–790	2205	S32205	95 (655)	10H	1	102	145	10.1	22Cr–5Ni–3Mo–N	Smls. & welded pipe
A/SA–790	S32304	S32304	87 (600)	10H	1	102	145	10.1	23Cr–4Ni–Mo–Cu–N	Smls. & welded pipe
A/SA–790	S32550	S32550	110 (760)	10H	1	102	145	10.2	25Cr–5Ni–3Mo–2Cu	Smls. & welded pipe
A/SA–790	S32750	S32750	116 (800)	10H	1	102	145	10.2	25Cr–7Ni–4Mo–N	Smls. & welded pipe
A/SA–790	S32760	S32760	109 (750)	10H	1	102	145	10.2	25Cr–8Ni–3Mo–W–Cu–N	Smls. & welded pipe
A/SA–790	S32900	S32900	90 (620)	10H	1	102	145	10.2	26Cr–4Ni–Mo	Smls. & welded pipe
A/SA–790	S32906	S32906	109 (750)	10H	1	102	145	10.2	29Cr–6.5Ni–2Mo–N	Smls. & welded pipe ≥ 0.40 in. (10 mm)
A/SA–790	S32906	S32906	116 (800)	10H	1	102	145	10.2	29Cr–6.5Ni–2Mo–N	Smls. & welded pipe < 0.40 in. (10 mm)
A/SA–790	S32950	S32950	100 (690)	10H	1	102	145	10.2	26Cr–4Ni–Mo–N	Smls. & welded pipe
A/SA–790	S39274	S39274	116 (800)	10H	1	102	145	10.2	25Cr–7Ni–3Mo–2W–Cu–N	Smls. & welded pipe
A/SA–790	...	S82441	99 (680)	10H	1	102	145	10.1	24Cr–4Ni–3Mn–1.5Mo–N	Smls. & welded pipe ≥ 0.40 in. (10 mm)
A/SA–790	...	S82441	107 (740)	10H	1	102	145	10.1	24Cr–4Ni–3Mn–1.5Mo–N	Smls. & welded pipe < 0.40 in. (10 mm)
A/SA–803	TP439	S43035	60 (415)	7	2	102	150	7.1	18Cr–Ti	Welded tube
A/SA–803	26–3–3	S44660	85 (585)	10K	1	102	150	7.1	26Cr–3Ni–3Mo	Welded tube
A/SA–813	N08367	N08367	95 (655)	45	...	111	420	8.2	46Fe–24Ni–21Cr–6Mo–N	Welded pipe > 0.1875 in. (5 mm)

Copyrighted material licensed to Fermi National Laboratory by Clarivate Analytics (US) LLC, subscriptions.techstreet.com, downloaded on 2020-09-23 17:45:20 +0000 by Fermi National Laboratory User.
No further reproduction or distribution is permitted.

Table QW/QB-422
Ferrous and Nonferrous P-Numbers
Grouping of Base Metals for Qualification (Cont'd)

Spec. No.	Designation, Type, or Grade	UNS No.	Minimum Specified Tensile, ksi (MPa)	Welding P-No.	Welding Group No.	Brazing P-No.	Brazing AWS B2.2 BM	ISO 15608 Group	Nominal Composition	Typical Product Form
						Ferrous (Cont'd)				
A/SA–813	N08367	N08367	100 (690)	45	...	111	420	8.2	46Fe–24Ni–21Cr–6Mo–N	Welded pipe ≤ 0.1875 in. (5 mm)
A/SA–813	TPXM–19	S20910	100 (690)	8	3	102	130	8.3	22Cr–13Ni–5Mn	Welded pipe
A/SA–813	TPXM–11	S21904	90 (620)	8	3	102	130	8.3	21Cr–6Ni–9Mn	Welded pipe
A/SA–813	TPXM–29	S24000	100 (690)	8	3	102	130	8.3	18Cr–3Ni–12Mn	Welded pipe
A/SA–813	TP304	S30400	75 (515)	8	1	102	130	8.1	18Cr–8Ni	Welded pipe
A/SA–813	TP304L	S30403	70 (485)	8	1	102	130	8.1	18Cr–8Ni	Welded pipe
A/SA–813	TP304H	S30409	75 (515)	8	1	102	130	8.1	18Cr–8Ni	Welded pipe
A/SA–813	TP304N	S30451	80 (550)	8	1	102	130	8.1	18Cr–8Ni–N	Welded pipe
A/SA–813	TP304LN	S30453	75 (515)	8	1	102	130	8.1	18Cr–8Ni–N	Welded pipe
A/SA–813	S30815	S30815	87 (600)	8	2	102	130	8.2	21Cr–11Ni–N	Welded pipe
A/SA–813	TP309S	S30908	75 (515)	8	2	102	130	8.2	23Cr–12Ni	Welded pipe
A/SA–813	TP309Cb	S30940	75 (515)	8	2	102	130	8.2	23Cr–12Ni–Cb	Welded pipe
A/SA–813	TP310S	S31008	75 (515)	8	2	102	130	8.2	25Cr–20Ni	Welded pipe
A/SA–813	TP310Cb	S31040	75 (515)	8	2	102	130	8.2	25Cr–20Ni–Cb	Welded pipe
A/SA–813	S31254	S31254	94 (650)	8	4	102	130	8.2	20Cr–18Ni–6Mo	Welded pipe
A/SA–813	TP316	S31600	75 (515)	8	1	102	130	8.1	16Cr–12Ni–2Mo	Welded pipe
A/SA–813	TP316L	S31603	70 (485)	8	1	102	130	8.1	16Cr–12Ni–2Mo	Welded pipe
A/SA–813	TP316H	S31609	75 (515)	8	1	102	130	8.1	16Cr–12Ni–2Mo	Welded pipe
A/SA–813	TP316N	S31651	80 (550)	8	1	102	130	8.1	16Cr–12Ni–2Mo–N	Welded pipe
A/SA–813	TP316LN	S31653	75 (515)	8	1	102	130	8.1	16Cr–12Ni–2Mo–N	Welded pipe
A/SA–813	TP317	S31700	75 (515)	8	1	102	130	8.1	18Cr–13Ni–3Mo	Welded pipe
A/SA–813	TP317L	S31703	75 (515)	8	1	102	130	8.1	18Cr–13Ni–3Mo	Welded pipe
A/SA–813	...	S32053	93 (640)	8	4	102	130	8.2	23Cr–25Ni–5.5Mo–N	Welded pipe
A/SA–813	TP321	S32100	75 (515)	8	1	102	140	8.1	18Cr–10Ni–Ti	Welded pipe
A/SA–813	TP321H	S32109	75 (515)	8	1	102	140	8.1	18Cr–10Ni–Ti	Welded pipe
A/SA–813	TP347	S34700	75 (515)	8	1	102	130	8.1	18Cr–10Ni–Cb	Welded pipe
A/SA–813	TP347H	S34709	75 (515)	8	1	102	130	8.1	18Cr–10Ni–Cb	Welded pipe
A/SA–813	TP348	S34800	75 (515)	8	1	102	130	8.1	18Cr–10Ni–Cb	Welded pipe
A/SA–813	TP348H	S34809	75 (515)	8	1	102	130	8.1	18Cr–10Ni–Cb	Welded pipe
A/SA–813	TPXM–15	S38100	75 (515)	8	1	102	130	8.1	18Cr–18Ni–2Si	Welded pipe
A/SA–814	N08367	N08367	95 (655)	45	...	111	420	8.2	46Fe–24Ni–21Cr–6Mo–N	Cold worked welded pipe > 0.1875 in. (5 mm)
A/SA–814	N08367	N08367	100 (690)	45	...	111	420	8.2	46Fe–24Ni–21Cr–6Mo–N	Cold worked welded pipe ≤ 0.1875 in. (5 mm)
A/SA–814	TPXM–19	S20910	100 (690)	8	3	102	130	8.3	22Cr–13Ni–5Mn	Cold worked welded pipe
A/SA–814	TPXM–11	S21904	90 (620)	8	3	102	130	8.3	21Cr–6Ni–9Mn	Cold worked welded pipe

Copyrighted material licensed to Fermi National Laboratory by Clarivate Analytics (US) LLC, subscriptions.techstreet.com, downloaded on 2020-09-23 17:45:20 +0000 by Fermi National Laboratory User.
No further reproduction or distribution is permitted.

Table QW/QB-422
Ferrous and Nonferrous P-Numbers
Grouping of Base Metals for Qualification (Cont'd)

Spec. No.	Designation, Type, or Grade	UNS No.	Minimum Specified Tensile, ksi (MPa)	Welding P-No.	Welding Group No.	Brazing P-No.	Brazing AWS B2.2 BM	ISO 15608 Group	Nominal Composition	Typical Product Form
						Ferrous (Cont'd)				
A/SA–814	TPXM–29	S24000	100 (690)	8	3	102	130	8.3	18Cr–3Ni–12Mn	Cold worked welded pipe
A/SA–814	TP304	S30400	75 (515)	8	1	102	130	8.1	18Cr–8Ni	Cold worked welded pipe
A/SA–814	TP304L	S30403	70 (485)	8	1	102	130	8.1	18Cr–8Ni	Cold worked welded pipe
A/SA–814	TP304H	S30409	75 (515)	8	1	102	130	8.1	18Cr–8Ni	Cold worked welded pipe
A/SA–814	TP304N	S30451	80 (550)	8	1	102	130	8.1	18Cr–8Ni–N	Cold worked welded pipe
A/SA–814	TP304LN	S30453	75 (515)	8	1	102	130	8.1	18Cr–8Ni–N	Cold worked welded pipe
A/SA–814	S30815	S30815	87 (600)	8	2	102	130	8.2	21Cr–11Ni–N	Cold worked welded pipe
A/SA–814	TP309S	S30908	75 (515)	8	2	102	130	8.2	23Cr–12Ni	Cold worked welded pipe
A/SA–814	TP309Cb	S30940	75 (515)	8	2	102	130	8.2	23Cr–12Ni–Cb	Cold worked welded pipe
A/SA–814	TP310S	S31008	75 (515)	8	2	102	130	8.2	25Cr–20Ni	Cold worked welded pipe
A/SA–814	TP310Cb	S31040	75 (515)	8	2	102	130	8.2	25Cr–20Ni–Cb	Cold worked welded pipe
A/SA–814	S31254	S31254	94 (650)	8	4	102	130	8.2	20Cr–18Ni–6Mo	Cold worked welded pipe
A/SA–814	TP316	S31600	75 (515)	8	1	102	130	8.1	16Cr–12Ni–2Mo	Cold worked welded pipe
A/SA–814	TP316L	S31603	70 (485)	8	1	102	130	8.1	16Cr–12Ni–2Mo	Cold worked welded pipe
A/SA–814	TP316H	S31609	75 (515)	8	1	102	130	8.1	16Cr–12Ni–2Mo	Cold worked welded pipe
A/SA–814	TP316N	S31651	80 (550)	8	1	102	130	8.1	16Cr–12Ni–2Mo–N	Cold worked welded pipe
A/SA–814	TP316LN	S31653	75 (515)	8	1	102	130	8.1	16Cr–12Ni–2Mo–N	Cold worked welded pipe
A/SA–814	TP317	S31700	75 (515)	8	1	102	130	8.1	18Cr–13Ni–3Mo	Cold worked welded pipe
A/SA–814	TP317L	S31703	75 (515)	8	1	102	130	8.1	18Cr–13Ni–3Mo	Cold worked welded pipe
A/SA–814	...	S32053	93 (640)	8	4	102	130	8.2	23Cr–25Ni–5.5Mo–N	Cold worked welded pipe
A/SA–814	TP321	S32100	75 (515)	8	1	102	140	8.1	18Cr–10Ni–Ti	Cold worked welded pipe
A/SA–814	TP321H	S32109	75 (515)	8	1	102	140	8.1	18Cr–10Ni–Ti	Cold worked welded pipe
A/SA–814	TP347	S34700	75 (515)	8	1	102	130	8.1	18Cr–10Ni–Cb	Cold worked welded pipe
A/SA–814	TP347H	S34709	75 (515)	8	1	102	130	8.1	18Cr–10Ni–Cb	Cold worked welded pipe
A/SA–814	TP348	S34800	75 (515)	8	1	102	130	8.1	18Cr–10Ni–Cb	Cold worked welded pipe
A/SA–814	TP348H	S34809	75 (515)	8	1	102	130	8.1	18Cr–10Ni–Cb	Cold worked welded pipe
A/SA–814	TPXM–15	S38100	75 (515)	8	1	102	130	8.1	18Cr–18Ni–2Si	Cold worked welded pipe
A/SA–815	S31803	S31803	90 (620)	10H	1	102	145	10.1	22Cr–5Ni–3Mo–N	Fittings
A/SA–815	...	S32101	94 (650)	10H	1	102	145	10.1	21Cr–5Mn–1.5Ni–Cu–N	Fittings
A/SA–815	...	S32202	94 (650)	10H	1	102	145	10.1	22Cr–2Ni–Mo–N	Fittings
A/SA–815	S32205	S32205	95 (655)	10H	1	102	145	10.1	22Cr–5Ni–3Mo–N	Fittings
A815	2507	S32750	116 (800)	10H	1	102	145	10.2	25Cr–7Ni–4Mo–N	Fittings
A/SA–815	S32760	S32760	109 (750)	10H	1	102	145	10.2	25Cr–8Ni–3Mo–W–Cu–N	Fittings
A/SA–815	S41500	S41500	110 (760)	6	4	102	150	7.2	13Cr–4.5Ni–Mo	Fittings

Copyrighted material licensed to Fermi National Laboratory by Clarivate Analytics (US) LLC, subscriptions.techstreet.com, downloaded on 2020-09-23 17:45:20 +0000 by Fermi National Laboratory User.
No further reproduction or distribution is permitted.

Table QW/QB-422
Ferrous and Nonferrous P-Numbers
Grouping of Base Metals for Qualification (Cont'd)

Spec. No.	Designation, Type, or Grade	UNS No.	Minimum Specified Tensile, ksi (MPa)	Welding P-No.	Welding Group No.	Brazing P-No.	Brazing AWS B2.2 BM	ISO 15608 Group	Nominal Composition	Typical Product Form
Ferrous (Cont'd)										
A/SA–832	23V	...	85 (585)	5C	1	102	110	6.2	3Cr–1Mo–0.25V–Cb–Ca	Plate
A/SA–832	21V	K31830	85 (585)	5C	1	102	120	6.2	3Cr–1Mo–V–Ti–B	Plate
A/SA–832	22V	K31835	85 (585)	5C	1	102	110	6.2	2.25Cr–1Mo–V	Plate
A/SA–836	...	...	55 (380)	1	1	101	120	1.1	C–Si–Ti	Forgings
A/SA–841	A, Cl. 1	...	65 (450)	1	2	101	100	1.2	C–Mn–Si	Plate > 2.5 in. (65 mm)
A/SA–841	A, Cl. 1	...	70 (485)	1	2	101	100	1.2	C–Mn–Si	Plate ≤ 2.5 in. (65 mm)
A/SA–841	B, Cl. 2	...	75 (515)	1	3	101	100	1.3	C–Mn–Si	Plate > 2.5 in. (65 mm)
A/SA–841	B, Cl. 2	...	80 (550)	1	3	101	100	1.3	C–Mn–Si	Plate ≤ 2.5 in. (65 mm)
A/SA–841	F, Cl. 6	...	82 (565)	3	3	101	100	2.2	Mn–0.85Ni–0.30Cr–0.50Mo	Plate
A/SA–841	F, Cl. 7	...	86 (595)	3	3	101	100	2.2	Mn–0.85Ni–0.30Cr–0.50Mo	Plate
A859	A, Cl. 1	K20747	65 (450)	11C	1	101	100	3.3	1Ni–1Cu–0.75Cr–Mo–Nb	Forgings
A859	A, Cl. 2	K20747	75 (515)	11C	1	101	100	3.3	1Ni–1Cu–0.75Cr–Mo–Nb	Forgings
A860	WPHY 42	...	60 (415)	1	1	101	120	1.2	C–Mn	Smls. & welded fittings
A860	WPHY 46	...	63 (435)	1	1	101	120	1.2	C–Mn	Smls. & welded fittings
A860	WPHY 52	...	66 (455)	1	1	101	120	1.2	C–Mn	Smls. & welded fittings
A860	WPHY 60	...	75 (515)	1	2	101	120	1.3	C–Mn	Smls. & welded fittings
A860	WPHY 65	...	77 (530)	1	2	101	120	1.3	C–Mn	Smls. & welded fittings
A860	WPHY 70	...	80 (550)	1	3	101	120	1.3	C–Mn	Smls. & welded fittings
A890	4A	J92205	90 (620)	10H	1	102	145	10.1	22Cr–5Ni–3Mo–N	Castings
A890	6A	J93380	100 (690)	10H	1	102	145	10.2	25Cr–8Ni–3Mo–W–Cu–N	Castings
A928	S31803	S31803	90 (620)	10H	1	102	145	10.1	22Cr–5Ni–3Mo–N	Welded pipe
A928	S32003	S32003	95 (655)	10H	1	102	145	10.1	21Cr–3.5Ni–Mo–N	Welded pipe > 0.1875 in. (5 mm)
A928	S32003	S32003	100 (690)	10H	1	102	145	10.1	21Cr–3.5Ni–Mo–N	Welded pipe ≤ 0.1875 in. (5 mm)
A928	2205	S32205	95 (655)	10H	1	102	145	10.1	22Cr–5Ni–3Mo–N	Welded pipe
A928	2304	S32304	87 (600)	10H	1	102	145	10.1	23Cr–4Ni–Mo–Cu–N	Welded pipe
A928	2507	S32750	116 (800)	10H	1	102	145	10.2	25Cr–7Ni–4Mo–N	Welded pipe
A928	...	S32760	108 (745)	10H	1	102	145	10.2	25Cr–8Ni–3Mo–W–Cu–N	Welded pipe
A/SA–965	FXM–19	S20910	100 (690)	8	3	102	130	8.3	22Cr–13Ni–5Mn	Forgings
A/SA–965	FXM–11	S21904	90 (620)	8	3	102	130	8.3	21Cr–6Ni–9Mn	Forgings
A/SA–965	F304	S30400	70 (485)	8	1	102	130	8.1	18Cr–8Ni	Forgings
A/SA–965	F304L	S30403	65 (450)	8	1	102	130	8.1	18Cr–8Ni	Forgings
A/SA–965	F304H	S30409	70 (485)	8	1	102	130	8.1	18Cr–8Ni	Forgings

Copyrighted material licensed to Fermi National Laboratory by Clarivate Analytics (US) LLC, subscriptions.techstreet.com, downloaded on 2020-09-23 17:45:20 +0000 by Fermi National Laboratory User.
No further reproduction or distribution is permitted.

Table QW/QB-422
Ferrous and Nonferrous P-Numbers
Grouping of Base Metals for Qualification (Cont'd)

Spec. No.	Designation, Type, or Grade	UNS No.	Minimum Specified Tensile, ksi (MPa)	Welding P-No.	Welding Group No.	Brazing P-No.	Brazing AWS B2.2 BM	ISO 15608 Group	Nominal Composition	Typical Product Form
						Ferrous (Cont'd)				
A/SA–965	F304N	S30451	80 (550)	8	1	102	130	8.1	18Cr–8Ni–N	Forgings
A/SA–965	F304LN	S30453	70 (485)	8	1	102	130	8.1	18Cr–8Ni–N	Forgings
A/SA–965	F46	S30600	78 (540)	8	1	102	130	8.1	18Cr–15Ni–4Si	Forgings
A/SA–965	F310	S31000	75 (515)	8	2	102	130	8.2	25Cr–20Ni	Forgings
A/SA–965	F316	S31600	70 (485)	8	1	102	130	8.1	16Cr–12Ni–2Mo	Forgings
A/SA–965	F316L	S31603	65 (450)	8	1	102	130	8.1	16Cr–12Ni–2Mo	Forgings
A/SA–965	F316H	S31609	70 (485)	8	1	102	130	8.1	16Cr–12Ni–2Mo	Forgings
A/SA–965	F316N	S31651	80 (550)	8	1	102	130	8.1	16Cr–12Ni–2Mo–N	Forgings
A/SA–965	F316LN	S31653	70 (485)	8	1	102	130	8.1	16Cr–12Ni–2Mo–N	Forgings
A/SA–965	F321	S32100	70 (485)	8	1	102	140	8.1	18Cr–10Ni–Ti	Forgings
A/SA–965	F321H	S32109	70 (485)	8	1	102	140	8.1	18Cr–10Ni–Ti	Forgings
A/SA–965	F347	S34700	70 (485)	8	1	102	130	8.1	18Cr–10Ni–Cb	Forgings
A/SA–965	F347H	S34709	70 (485)	8	1	102	130	8.1	18Cr–10Ni–Cb	Forgings
A/SA–965	F348	S34800	70 (485)	8	1	102	130	8.1	18Cr–10Ni–Cb	Forgings
A/SA–965	F348H	S34809	70 (485)	8	1	102	130	8.1	18Cr–10Ni–Cb	Forgings
A992	...	...	65 (450)	1	1	101	100	1.2	C–Mn–Si	Shapes
A/SA–995	4A	J92205	90 (620)	10H	1	102	145	10.1	22Cr–5Ni–3Mo–N	Castings
A/SA–995	2A	J93345	95 (655)	10H	1	102	145	10.2	24Cr–10Ni–4Mo–N	Castings
A/SA–995	1B	J93372	100 (690)	10H	1	102	145	10.2	25Cr–5Ni–3Mo–2Cu	Castings
A/SA–995	6A	J93380	100 (690)	10H	1	102	145	10.2	25Cr–8Ni–3Mo–W–Cu–N	Castings
A/SA–995	5A	J93404	100 (690)	10H	1	102	145	10.2	25Cr–7Ni–4Mo–N	Castings
A/SA–1008	CS A	...	40 (275)	1	1	101	100	1.1	C	Sheet
A/SA–1008	CS B	...	40 (275)	1	1	101	100	1.1	C	Sheet
A/SA–1008	DS B	...	40 (275)	1	1	101	100	1.1	C	Sheet
A/SA–1010	40	S41003	66 (455)	7	1	102	150	7.2	12Cr–1Ni	Plate, sheet & strip
A/SA–1010	50	S41003	70 (485)	7	1	102	150	7.2	12Cr–1Ni	Plate, sheet & strip
A/SA–1011	CS B	...	40 (275)	1	1	101	100	1.1	C	Sheet & strip
A/SA–1011	DS B	...	40 (275)	1	1	101	100	1.1	C	Sheet & strip
A/SA–1011	HSLAS 45 Cl. 1	...	60 (415)	1	1	101	120	1.2	C	Sheet & strip
A/SA–1011	HSLAS 45 Cl. 2	...	55 (380)	1	1	101	120	1.2	C	Sheet & strip
A/SA–1011	HSLAS 50 Cl. 1	...	65 (450)	1	1	101	120	1.2	C	Sheet & strip
A/SA–1011	HSLAS 50 Cl. 2	...	60 (415)	1	1	101	120	1.2	C	Sheet & strip
A/SA–1011	HSLAS 55 Cl. 1	...	70 (485)	1	2	101	120	1.3	C	Sheet & strip
A/SA–1011	HSLAS 55 Cl. 2	...	65 (450)	1	1	101	120	1.3	C	Sheet & strip

Copyrighted material licensed to Fermi National Laboratory by Clarivate Analytics (US) LLC, subscriptions.techstreet.com, downloaded on 2020-09-23 17:45:20 +0000 by Fermi National Laboratory User.
No further reproduction or distribution is permitted.

Table QW/QB-422
Ferrous and Nonferrous P-Numbers
Grouping of Base Metals for Qualification (Cont'd)

Spec. No.	Designation, Type, or Grade	UNS No.	Minimum Specified Tensile, ksi (MPa)	Welding P-No.	Welding Group No.	Brazing P-No.	Brazing AWS B2.2 BM	ISO 15608 Group	Nominal Composition	Typical Product Form
						Ferrous (Cont'd)				
A/SA–1011	HSLAS 60 Cl. 1	...	75 (515)	1	2	101	120	1.3	C	Sheet & strip
A/SA–1011	HSLAS 60 Cl. 2	...	70 (485)	1	2	101	120	1.3	C	Sheet & strip
A/SA–1011	SS 33	...	52 (360)	1	1	101	100	1.1	C	Sheet & strip
A/SA–1011	SS 36 2	...	58 (400)	1	1	101	100	1.1	C	Sheet & strip
A/SA–1011	SS 40	...	55 (380)	1	1	101	100	1.2	C	Sheet & strip
A/SA–1011	SS 45	...	60 (415)	1	1	101	120	1.2	C	Sheet & strip
A/SA–1011	SS 50	...	65 (450)	1	1	101	100	1.2	C	Sheet & strip
A/SA–1011	SS 55	...	70 (485)	1	2	101	100	1.3	C	Sheet & strip
A/SA–1011	SS 60	...	75 (515)	1	2	101	100	1.3	C	Sheet & strip
A/SA–1017	92	K92460	90 (620)	15E	1	102	110	6.4	9Cr–2W	Plate
A1066	50	...	65 (450)	3	1	101	100	1.2	Mn–Ni–Cr–Mo	Plate
A1066	60	...	75 (515)	3	2	101	100	2.1	Mn–Ni–Cr–Mo	Plate
A1066	65	...	80 (550)	3	3	101	100	2.1	Mn–Ni–Cr–Mo	Plate
A1066	70	...	85 (585)	3	3	101	100	2.2	Mn–Ni–Cr–Mo	Plate
A1066	80	...	90 (620)	3	3	101	100	2.2	Mn–Ni–Cr–Mo	Plate
A1091	C91	J84090	85 (585)	15E	1	102	110	6.4	9Cr–1Mo–V	Castings
API 5L	A	...	49 (340)	1	1	101	100	1.1	C–Mn	Smls. & welded pipe
API 5L	A25	...	45 (310)	1	1	101	100	1.1	C–Mn	Smls. & welded pipe
API 5L	A25P	...	45 (310)	1	1	101	100	1.1	C–Mn	Smls. & welded pipe
API 5L	B	...	60 (415)	1	1	101	120	11.1	C–Mn	Smls. & welded pipe
API 5L	BM	...	60 (415)	1	1	101	120	1.1	C–Mn	Welded pipe
API 5L	BMO	...	60 (415)	1	1	101	120	1.1	C–Mn	Welded pipe
API 5L	BMS	...	60 (415)	1	1	101	120	1.1	C–Mn	Welded pipe
API 5L	BN	...	60 (415)	1	1	101	120	1.1	C–Mn	Smls. & welded pipe
API 5L	BNO	...	60 (415)	1	1	101	120	1.1	C–Mn	Smls. & welded pipe
API 5L	BNS	...	60 (415)	1	1	101	120	1.1	C–Mn	Smls. & welded pipe
API 5L	BQ	...	60 (415)	1	1	101	120	1.1	C–Mn	Smls. & welded pipe
API 5L	BQO	...	60 (415)	1	1	101	120	1.1	C–Mn	Smls. & welded pipe
API 5L	BQS	...	60 (415)	1	1	101	120	1.1	C–Mn	Smls. & welded pipe
API 5L	BR	...	60 (415)	1	1	101	120	1.1	C–Mn	Smls. & welded pipe
API 5L	X42	...	60 (415)	1	1	101	120	11.1	C–Mn	Smls. & welded pipe
API 5L	X42M	...	60 (415)	1	1	101	120	1.2	C–Mn	Welded pipe
API 5L	X42MO	...	60 (415)	1	1	101	120	1.2	C–Mn	Welded pipe
API 5L	X42MS	...	60 (415)	1	1	101	120	1.2	C–Mn	Welded pipe

Copyrighted material licensed to Fermi National Laboratory by Clarivate Analytics (US) LLC, subscriptions.techstreet.com, downloaded on 2020-09-23 17:45:20 +0000 by Fermi National Laboratory User.
No further reproduction or distribution is permitted.

Table QW/QB-422
Ferrous and Nonferrous P-Numbers
Grouping of Base Metals for Qualification (Cont'd)

Spec. No.	Designation, Type, or Grade	UNS No.	Minimum Specified Tensile, ksi (MPa)	Welding P-No.	Welding Group No.	Brazing P-No.	Brazing AWS B2.2 BM	ISO 15608 Group	Nominal Composition	Typical Product Form
						Ferrous (Cont'd)				
API 5L	X42N	...	60 (415)	1	1	101	120	1.2	C–Mn	Smls. & welded pipe
API 5L	X42NO	...	60 (415)	1	1	101	120	1.2	C–Mn	Smls. & welded pipe
API 5L	X42NS	...	60 (415)	1	1	101	120	1.2	C–Mn	Smls. & welded pipe
API 5L	X42Q	...	60 (415)	1	1	101	120	1.2	C–Mn	Smls. & welded pipe
API 5L	X42QO	...	60 (415)	1	1	101	120	1.2	C–Mn	Smls. & welded pipe
API 5L	X42QS	...	60 (415)	1	1	101	120	1.2	C–Mn	Smls. & welded pipe
API 5L	X42R	...	60 (415)	1	1	101	120	1.2	C–Mn	Smls. & welded pipe
API 5L	X46	...	63 (435)	1	1	101	120	11.1	C–Mn	Smls. & welded pipe
API 5L	X46M	...	63 (435)	1	1	101	120	1.2	C–Mn	Welded pipe
API 5L	X46MO	...	63 (435)	1	1	101	120	1.2	C–Mn	Welded pipe
API 5L	X46MS	...	63 (435)	1	1	101	120	1.2	C–Mn	Welded pipe
API 5L	X46N	...	63 (435)	1	1	101	120	1.2	C–Mn	Smls. & welded pipe
API 5L	X46NO	...	63 (435)	1	1	101	120	1.2	C–Mn	Smls. & welded pipe
API 5L	X46NS	...	63 (435)	1	1	101	120	1.2	C–Mn	Smls. & welded pipe
API 5L	X46Q	...	63 (435)	1	1	101	120	1.2	C–Mn	Smls. & welded pipe
API 5L	X46QO	...	63 (435)	1	1	101	120	1.2	C–Mn	Smls. & welded pipe
API 5L	X46QS	...	63 (435)	1	1	101	120	1.2	C–Mn	Smls. & welded pipe
API 5L	X52	...	67 (460)	1	1	101	120	11.1	C–Mn	Smls. & welded pipe
API 5L	X52M	...	67 (460)	1	1	101	120	1.2	C–Mn	Welded pipe
API 5L	X52MO	...	67 (460)	1	1	101	120	1.2	C–Mn	Welded pipe
API 5L	X52MS	...	67 (460)	1	1	101	120	1.2	C–Mn	Welded pipe
API 5L	X52N	...	67 (460)	1	1	101	120	1.2	C–Mn	Smls. & welded pipe
API 5L	X52NO	...	67 (460)	1	1	101	120	1.2	C–Mn	Smls. & welded pipe
API 5L	X52NS	...	67 (460)	1	1	101	120	1.2	C–Mn	Smls. & welded pipe
API 5L	X52Q	...	67 (460)	1	1	101	120	1.2	C–Mn	Smls. & welded pipe
API 5L	X52QO	...	67 (460)	1	1	101	120	1.2	C–Mn	Smls. & welded pipe
API 5L	X52QS	...	67 (460)	1	1	101	120	1.2	C–Mn	Smls. & welded pipe
API 5L	X56	...	71 (490)	1	2	101	120	11.1	C–Mn	Smls. & welded pipe
API 5L	X56M	...	71 (490)	1	2	101	120	2.1	C–Mn	Welded pipe
API 5L	X56MO	...	71 (490)	1	2	101	120	2.1	C–Mn	Welded pipe
API 5L	X56MS	...	71 (490)	1	2	101	120	2.1	C–Mn	Welded pipe
API 5L	X56N	...	71 (490)	1	2	101	120	1.3	C–Mn	Smls. & welded pipe
API 5L	X56Q	...	71 (490)	1	2	101	120	3.1	C–Mn	Smls. & welded pipe
API 5L	X56QO	...	71 (490)	1	2	101	120	3.1	C–Mn	Smls. & welded pipe
API 5L	X56QS	...	71 (490)	1	2	101	120	3.1	C–Mn	Smls. & welded pipe
API 5L	X60	...	75 (515)	1	2	101	120	11.1	C–Mn	Smls. & welded pipe
API 5L	X60M	...	75 (515)	1	2	101	120	2.1	C–Mn	Welded pipe

Copyrighted material licensed to Fermi National Laboratory by Clarivate Analytics (US) LLC, subscriptions.techstreet.com, downloaded on 2020-09-23 17:45:20 +0000 by Fermi National Laboratory User.
No further reproduction or distribution is permitted.

Table QW/QB-422
Ferrous and Nonferrous P-Numbers
Grouping of Base Metals for Qualification (Cont'd)

Spec. No.	Designation, Type, or Grade	UNS No.	Minimum Specified Tensile, ksi (MPa)	Welding P-No.	Welding Group No.	Brazing P-No.	Brazing AWS B2.2 BM	ISO 15608 Group	Nominal Composition	Typical Product Form
						Ferrous (Cont'd)				
API 5L	X60MO	...	75 (515)	1	2	101	120	2.1	C–Mn	Welded pipe
API 5L	X60MS	...	75 (515)	1	2	101	120	2.1	C–Mn	Welded pipe
API 5L	X60N	...	75 (515)	1	2	101	120	1.3	C–Mn	Smls. & welded pipe
API 5L	X60Q	...	75 (515)	1	2	101	120	3.1	C–Mn	Smls. & welded pipe
API 5L	X60QO	...	75 (515)	1	2	101	120	3.1	C–Mn	Smls. & welded pipe
API 5L	X60QS	...	75 (515)	1	2	101	120	3.1	C–Mn	Smls. & welded pipe
API 5L	X65	...	78 (540)	1	2	101	120	11.1	C–Mn	Smls. & welded pipe
API 5L	X65M	...	78 (540)	1	2	101	120	2.1	C–Mn	Welded pipe
API 5L	X65MO	...	78 (540)	1	2	101	120	2.1	C–Mn	Welded pipe
API 5L	X65MS	...	78 (540)	1	2	101	120	2.1	C–Mn	Welded pipe
API 5L	X65Q	...	78 (540)	1	2	101	120	3.1	C–Mn	Smls. & welded pipe
API 5L	X65QO	...	78 (540)	1	2	101	120	3.1	C–Mn	Smls. & welded pipe
API 5L	X65QS	...	78 (540)	1	2	101	120	3.1	C–Mn	Smls. & welded pipe
API 5L	X70	...	83 (565)	1	3	101	120	11.1	C–Mn	Smls. & welded pipe
API 5L	X70M	...	83 (565)	1	3	101	120	2.2	C–Mn	Welded pipe
API 5L	X70MO	...	83 (565)	1	3	101	120	2.2	C–Mn	Welded pipe
API 5L	X70MS	...	83 (565)	1	3	101	120	2.2	C–Mn	Welded pipe
API 5L	X70Q	...	83 (565)	1	3	101	120	3.1	C–Mn	Smls. & welded pipe
API 5L	X70QO	...	83 (565)	1	3	101	120	3.1	C–Mn	Smls. & welded pipe
API 5L	X70QS	...	83 (565)	1	3	101	120	3.1	C–Mn	Smls. & welded pipe
API 5L	X80M	...	91 (625)	1	4	101	120	2.2	C–Mn	Welded pipe
API 5L	X80MO	...	91 (625)	1	4	101	120	2.2	C–Mn	Welded pipe
API 5L	X80Q	...	91 (625)	1	4	101	120	3.1	C–Mn	Smls. & welded pipe
API 5L	X80QO	...	91 (625)	1	4	101	120	3.1	C–Mn	Smls. & welded pipe
AS 1448	K3	...	59.5 (410)	1	1	101	100	1.1	C–Si	Forgings
AS 1448	K4	...	72.5 (500)	1	2	101	100	11.2	C–Si	Forgings
AS 1448	K5	...	78 (540)	1	2	101	100	11.2	C–Mn–Si	Forgings
AS 1448	K6	...	87 (600)	1	3	101	100	11.2	C–Mn–Si	Forgings
AS 1448	K8	...	69.5 (480)	1	1	101	100	1.2	C–Mn–Si	Forgings
AS 1448	K9	...	78 (540)	1	2	101	100	1.2	C–Mn–Si	Forgings
AS 1448	K10	...	84 (580)	1	3	101	100	11.1	C–Mn–Si	Forgings
AS 1448	S1	...	58 (400)	1	1	101	100	1.1	C–Si	Forgings
AS 1448	S3	...	59.5 (410)	1	1	101	100	1.1	C–Si	Forgings
AS 1448	S4	...	72.5 (500)	1	2	101	100	11.2	C–Si	Forgings
AS 1448	S5	...	78 (540)	1	2	101	100	11.2	C–Mn	Forgings
AS 1448	S6	...	87 (600)	1	3	101	100	11.2	C–Mn	Forgings

Copyrighted material licensed to Fermi National Laboratory by Clarivate Analytics (US) LLC, subscriptions.techstreet.com, downloaded on 2020-09-23 17:45:20 +0000 by Fermi National Laboratory User.
No further reproduction or distribution is permitted.

Table QW/QB-422
Ferrous and Nonferrous P-Numbers
Grouping of Base Metals for Qualification (Cont'd)

Spec. No.	Designation, Type, or Grade	UNS No.	Minimum Specified Tensile, ksi (MPa)	Welding P-No.	Welding Group No.	Brazing P-No.	Brazing AWS B2.2 BM	ISO 15608 Group	Nominal Composition	Typical Product Form
Ferrous (Cont'd)										
AS 4728	200 L0	...	46.5 (320)	1	1	101	120	1.1	C–Mn	E.R.W. pipe
AS 4728	240 L0	...	55 (380)	1	1	101	120	1.1	C–Mn	E.R.W. pipe
AS 4728	290 L0	...	60 (415)	1	1	101	120	1.2	C–Mn	E.R.W. pipe
CSA Z245.1	241	...	60 (415)	1	1	101	120	11.1	C–Mn	Smls. & welded pipe
CSA Z245.1	290	...	60 (415)	1	1	101	120	11.1	C–Mn	Smls. & welded pipe
CSA Z245.1	359	...	66 (455)	1	1	101	120	11.1	C–Mn	Smls. & welded pipe
CSA Z245.1	386	...	71 (490)	1	2	101	120	11.1	C–Mn	Smls. & welded pipe
CSA Z245.1	414	...	75 (515)	1	2	101	120	11.1	C–Mn	Smls. & welded pipe
CSA Z245.1	448	...	77 (530)	1	2	101	120	11.1	C–Mn	Smls. & welded pipe
CSA Z245.1	483	...	82 (565)	1	3	101	120	11.1	C–Mn	Smls. & welded pipe
CSA Z245.1	550	...	90 (620)	1	4	101	120	11.1	C–Mn	Smls. & welded pipe
CSA Z245.1	620	...	100 (690)	1	4	101	120	11.1	C–Mn	Smls. & welded pipe
CSA Z245.11	207	...	48 (331)	1	1	101	100	11.1	C–Mn	Fittings
CSA Z245.11	241	...	60 (414)	1	1	101	100	11.1	C–Mn	Fittings
CSA Z245.11	290	...	60 (414)	1	1	101	100	11.1	C–Mn	Fittings
CSA Z245.11	317	...	63 (434)	1	1	101	100	11.1	C–Mn	Fittings
CSA Z245.11	359	...	66 (455)	1	1	101	100	11.1	C–Mn	Fittings
CSA Z245.11	386	...	71 (490)	1	2	101	100	11.1	C–Mn	Fittings
CSA Z245.11	414	...	75 (517)	1	2	101	100	11.1	C–Mn	Fittings
CSA Z245.11	448	...	77 (531)	1	2	101	100	11.1	C–Mn	Fittings
CSA Z245.11	483	...	82 (565)	1	3	101	100	11.1	C–Mn	Fittings
CSA Z245.11	550	...	90 (620)	1	4	101	100	11.1	C–Mn	Fittings
CSA Z245.11	620	...	100 (690)	1	4	101	100	11.1	C–Mn	Fittings
CSA Z245.12	248	...	60 (414)	1	1	101	100	11.1	C–Mn	Flanges
CSA Z245.12	290	...	60 (414)	1	1	101	100	11.1	C–Mn	Flanges
CSA Z245.12	317	...	63 (434)	1	1	101	100	11.1	C–Mn	Flanges
CSA Z245.12	359	...	66 (455)	1	1	101	100	11.1	C–Mn	Flanges
CSA Z245.12	386	...	71 (490)	1	2	101	100	11.1	C–Mn	Flanges
CSA Z245.12	414	...	75 (517)	1	2	101	100	11.1	C–Mn	Flanges
CSA Z245.12	448	...	77 (531)	1	2	101	100	11.1	C–Mn	Flanges
CSA Z245.12	483	...	82 (565)	1	3	101	100	11.1	C–Mn	Flanges
CSA Z245.12	550	...	90 (620)	1	4	101	100	11.1	C–Mn	Flanges
CSA Z245.12	620	...	100 (690)	1	4	101	100	11.1	C–Mn	Flanges

Copyrighted material licensed to Fermi National Laboratory by Clarivate Analytics (US) LLC, subscriptions.techstreet.com, downloaded on 2020-09-23 17:45:20 +0000 by Fermi National Laboratory User.
No further reproduction or distribution is permitted.

Table QW/QB-422
Ferrous and Nonferrous P-Numbers
Grouping of Base Metals for Qualification (Cont'd)

Spec. No.	Designation, Type, or Grade	UNS No.	Minimum Specified Tensile, ksi (MPa)	Welding P-No.	Welding Group No.	Brazing P-No.	Brazing AWS B2.2 BM	ISO 15608 Group	Nominal Composition	Typical Product Form
Ferrous (Cont'd)										
EN or SA/EN 10025–2	S235JR	...	52 (360)	1	1	...	100	1.1	C	Plate
EN or SA/EN 10028–2	10CrMo9–10	...	65.5 (450)	5A	1	102	110	5.2	2.25Cr–1Mo	Plate > 6 in. (150 mm) ≤ 10 in. (250 mm)
EN or SA/EN 10028–2	10CrMo9–10	...	66.5 (460)	5A	1	102	110	5.2	2.25Cr–1Mo	Plate > 4 in. (100 mm) ≤ 6 in. (150 mm)
EN or SA/EN 10028–2	10CrMo9–10	...	68 (470)	5A	1	102	110	5.2	2.25Cr–1Mo	Plate > 2.4 in. (60 mm) ≤ 4 in. (100 mm)
EN or SA/EN 10028–2	10CrMo9–10	...	69.5 (480)	5A	1	102	110	5.2	2.25Cr–1Mo	Plate ≤ 2.4 in. (60 mm)
EN or SA/EN 10028–2	13CrMo4–5	...	61 (420)	4	1	102	110	5.1	1Cr–0.5Mo	Plate > 6 in. (150 mm) ≤ 10 in. (250 mm)
EN or SA/EN 10028–2	13CrMo4–5	...	62.5 (430)	4	1	102	110	5.1	1Cr–0.5Mo	Plate > 4 in. (100 mm) ≤ 6 in. (150 mm)
EN or SA/EN 10028–2	13CrMo4–5	...	64 (440)	4	1	102	110	5.1	1Cr–0.5Mo	Plate > 2.4 in. (60 mm) ≤ 4 in. (100 mm)
EN or SA/EN 10028–2	13CrMo4–5	...	65.5 (450)	4	1	102	110	5.1	1Cr–0.5Mo	Plate ≤ 2.4 in. (60 mm)
EN or SA/EN 10028–2	13CrMoSi5–5+QT	...	71 (490)	4	1	102	110	5.1	1.25Cr–0.5Mo–Si	Plate > 4 in.–10 in. (100 mm–250 mm), incl.
EN or SA/EN 10028–2	13CrMoSi5–5+QT	...	72.5 (500)	4	1	102	110	5.1	1.25Cr–0.5Mo–Si	Plate > 2.4 in.–4 in. (60 mm–100 mm), incl.
EN or SA/EN 10028–2	13CrMoSi5–5+QT	...	74 (510)	4	1	102	110	5.1	1.25Cr–0.5Mo–Si	Plate ≤ 2.4 in. (60 mm)
EN or SA/EN 10028–2	P235GH	...	52 (360)	1	1	101	100	1.1	C–Mn	Plate ≤ 2.4 in. (60 mm)
EN or SA/EN 10028–2	P265GH	...	59.5 (410)	1	1	101	100	1.1	C–Mn	Plate ≤ 2.4 in. (60 mm)
EN or SA/EN 10028–2	P295GH	...	62.5 (430)	1	1	101	100	1.2	C–Mn–Si	Plate > 6 in. (150 mm) ≤ 10 in. (250 mm)
EN or SA/EN 10028–2	P295GH	...	64 (440)	1	1	101	100	1.2	C–Mn–Si	Plate > 4 in. (100 mm) ≤ 6 in. (150 mm)
EN or SA/EN 10028–2	P295GH	...	66.5 (460)	1	1	101	100	1.2	C–Mn–Si	Plate ≤ 4 in. (100 mm)
EN or SA/EN 10028–2	P355GH	...	68 (470)	1	2	101	100	1.2	C–Mn–Si	Plate > 6 in. (150 mm) ≤ 10 in. (250 mm)

Copyrighted material licensed to Fermi National Laboratory by Clarivate Analytics (US) LLC, subscriptions.techstreet.com, downloaded on 2020-09-23 17:45:20 +0000 by Fermi National Laboratory User.
No further reproduction or distribution is permitted.

Table QW/QB-422
Ferrous and Nonferrous P-Numbers
Grouping of Base Metals for Qualification (Cont'd)

Spec. No.	Designation, Type, or Grade	UNS No.	Minimum Specified Tensile, ksi (MPa)	Welding P-No.	Welding Group No.	Brazing P-No.	Brazing AWS B2.2 BM	ISO 15608 Group	Nominal Composition	Typical Product Form
Ferrous (Cont'd)										
EN or SA/EN 10028–2	P355GH	...	69.5 (480)	1	2	101	100	1.2	C–Mn–Si	Plate > 4 in. (100 mm) ≤ 6 in. (150 mm)
EN or SA/EN 10028–2	P355GH	...	71 (490)	1	2	101	100	1.2	C–Mn–Si	Plate > 2.4 in. (60 mm) ≤ 4 in. (100 mm)
EN or SA/EN 10028–2	P355GH	...	74 (510)	1	2	101	100	1.2	C–Mn–Si	Plate ≤ 2.4 in. (60 mm)
EN or SA/EN 10028–3	P275NH	...	51 (350)	1	1	101	100	1.1	C	Plate > 6 in. (150 mm) ≤ 10 in. (250 mm)
EN or SA/EN 10028–3	P275NH	...	52 (360)	1	1	101	100	1.1	C	Plate > 4 in. (100 mm) ≤ 6 in. (150 mm)
EN or SA/EN 10028–3	P275NH	...	53.5 (370)	1	1	101	100	1.1	C	Plate > 2 in. (50 mm) ≤ 4 in. (100 mm)
EN or SA/EN 10028–3	P275NH	...	56.5 (390)	1	1	101	100	1.1	C	Plate ≤ 2 in. (50 mm)
EN or SA/EN 10028–3	P355NH	...	65.5 (450)	1	2	101	120	1.2	C–Mn–Si	Plate > 6 in. (150 mm) ≤ 10 in. (250 mm)
EN or SA/EN 10028–3	P355NH	...	66.5 (460)	1	2	101	120	1.2	C–Mn–Si	Plate > 4 in. (100 mm) ≤ 6 in. (150 mm)
EN or SA/EN 10028–3	P355NH	...	68 (470)	1	2	101	120	1.2	C–Mn–Si	Plate > 2.4 in. (60 mm) ≤ 4 in. (100 mm)
EN or SA/EN 10028–3	P355NH	...	71 (490)	1	2	101	120	1.2	C–Mn–Si	Plate ≤ 2.4 in. (60 mm)
EN or SA/EN 10028–3	P355NL2	...	65 (450)	1	2	101	120	1.2	C–Mn	Plate > 6 in. (150 mm) ≤ 10 in. (250 mm)
EN or SA/EN 10028–3	P355NL2	...	67 (460)	1	2	101	120	1.2	C–Mn	Plate > 4 in. (100 mm) ≤ 6 in. (150 mm)
EN or SA/EN 10028–3	P355NL2	...	68 (470)	1	2	101	120	1.2	C–Mn	Plate > 2.4 in. (60 mm) ≤ 4 in. (100 mm)
EN or SA/EN 10028–3	P355NL2	...	71 (490)	1	2	101	120	1.2	C–Mn	Plate ≤ 2.4 in. (60 mm)
EN or SA/EN 10028–4	X7Ni9	...	98.5 (680)	11A	1	...	100	9.3	9Ni	Plate
EN or SA/EN 10028–4	X8Ni9	...	93 (640)	11A	1	...	100	9.3	9Ni	Plate

Copyrighted material licensed to Fermi National Laboratory by Clarivate Analytics (US) LLC, subscriptions.techstreet.com, downloaded on 2020-09-23 17:45:20 +0000 by Fermi National Laboratory User.
No further reproduction or distribution is permitted.

Table QW/QB-422
Ferrous and Nonferrous P-Numbers
Grouping of Base Metals for Qualification (Cont'd)

Spec. No.	Designation, Type, or Grade	UNS No.	Minimum Specified Tensile, ksi (MPa)	Welding P-No.	Welding Group No.	Brazing P-No.	Brazing AWS B2.2 BM	ISO 15608 Group	Nominal Composition	Typical Product Form
Ferrous (Cont'd)										
EN or SA/EN 10028–7	X2CrNi18–9	...	72.5 (500)	8	1	102	130	8.1	18Cr–8Ni	Plate
EN or SA/EN 10028–7	X2CrNiMo17–12–2	...	75.5 (520)	8	1	102	130	8.1	16Cr–12Ni–2Mo	Plate
EN or SA/EN 10028–7	X2CrNiMoN17–11–2	...	84 (580)	8	1	102	130	8.1	16Cr–12Ni–2Mo–N	Plate
EN or SA/EN 10028–7	X2CrNiMoN17–13–3	...	84 (580)	8	1	102	130	8.1	16Cr–12Ni–2Mo–N	Plate
EN or SA/EN 10028–7	X2CrNiN18–10	...	80 (550)	8	1	102	130	8.1	18Cr–8Ni–N	Plate
EN or SA/EN 10028–7	X5CrNi18–10	...	75.5 (520)	8	1	102	130	8.1	18Cr–8Ni	Plate
EN or SA/EN 10028–7	X5CrNiMo17–12–2	...	75.5 (520)	8	1	102	130	8.1	16Cr–12Ni–2Mo	Plate
EN or SA/EN 10028–7	X5CrNiN19–9	...	80 (550)	8	1	102	130	8.1	18Cr–8Ni–N	Plate
EN or SA/EN 10028–7	X6CrNiTi18–10	...	72.5 (500)	8	1	102	130	8.1	18Cr–10Ni–Ti	Plate
EN or SA/EN 10088–2	X6CrNiMoTi17–12–2	...	78.5 (540)	8	1	...	130	8.1	16Cr–12Ni–2Mo–Ti	Plate, sheet & strip
EN or SA/EN 10216–2	10CrMo9–10	...	69.5 (480)	5A	1	...	110	5.2	2.25Cr–1Mo	Smls. tube
EN or SA/EN 10216–2	13CrMo4–5	...	64 (440)	4	1	...	110	5.1	1Cr–0.5Mo	Smls. tube
EN or SA/EN 10216–2	16Mo3	...	65.5 (450)	3	1	...	100	1.1	C–0.5Mo	Smls. tube
EN or SA/EN 10216–2	P235GH	...	52 (360)	1	1	...	100	1.1	C	Smls. tube
EN or SA/EN 10216–2	P265GH	...	59.5 (410)	1	1	...	100	1.1	C	Smls. tube
EN or SA/EN 10216–2	X10CrMoVNb9–1	...	91.5 (630)	15E	1	...	110	6.4	9Cr–1Mo–V	Smls. tube
EN or SA/EN 10217–1	P235TR2	...	52 (360)	1	1	...	100	1.1	C	E.R.W. tube

Copyrighted material licensed to Fermi National Laboratory by Clarivate Analytics (US) LLC, subscriptions.techstreet.com, downloaded on 2020-09-23 17:45:20 +0000 by Fermi National Laboratory User.
No further reproduction or distribution is permitted.

Table QW/QB-422
Ferrous and Nonferrous P-Numbers
Grouping of Base Metals for Qualification (Cont'd)

Spec. No.	Designation, Type, or Grade	UNS No.	Minimum Specified Tensile, ksi (MPa)	Welding P-No.	Welding Group No.	Brazing P-No.	Brazing AWS B2.2 BM	ISO 15608 Group	Nominal Composition	Typical Product Form
						Ferrous (Cont'd)				
EN or SA/EN 10222–2	11CrMo9–10	...	65.5 (450)	5A	1	102	110	5.2	2.25Cr–1Mo	Forgings > 8 in. (200 mm) ≤ 20 in. (500 mm)
EN or SA/EN 10222–2	11CrMo9–10	...	75.5 (520)	5A	1	102	110	5.2	2.25Cr–1Mo	Forgings ≤ 8 in. (200 mm)
EN or SA/EN 10222–2	13CrMo4–5	...	61 (420)	4	1	102	110	5.1	1Cr–0.5Mo	Forgings > 10 in. (250 mm) ≤ 20 in. (500 mm)
EN or SA/EN 10222–2	13CrMo4–5	...	64 (440)	4	1	102	110	5.1	1Cr–0.5Mo	Forgings ≤ 10 in. (250 mm)
EN or SA/EN 10222–2	P280GH	...	66.5 (460)	1	1	101	100	1.2	C–Mn–Si	Forgings
EN or SA/EN 10222–2	P305GH	...	71 (490)	1	2	101	100	1.2	C–Mn–Si	Forgings
EN or SA/EN 10222–2	X10CrMoVNb9–1	...	91.5 (630)	15E	1	102	110	6.4	9Cr–1Mo–V	Forgings
MSS SP–75	WPHY–42	...	60 (415)	1	1	101	120	11.1	C–Mn	Smls. & welded fittings
MSS SP–75	WPHY–46	...	63 (435)	1	1	101	120	11.1	C–Mn	Smls. & welded fittings
MSS SP–75	WPHY–52	...	66 (455)	1	1	101	120	11.1	C–Mn	Smls. & welded fittings
MSS SP–75	WPHY–56	...	71 (490)	1	2	101	120	11.1	C–Mn	Smls. & welded fittings
MSS SP–75	WPHY–60	...	75 (515)	1	2	101	120	11.1	C–Mn	Smls. & welded fittings
MSS SP–75	WPHY–65	...	77 (530)	1	2	101	120	11.1	C–Mn	Smls. & welded fittings
MSS SP–75	WPHY–70	...	82 (565)	1	3	101	120	...	C–Mn	Smls. & welded fittings
SA/AS 1548	PT430	...	62.5 (430)	1	1	101	100	1.1	C	Plate
SA/AS 1548	PT460	...	66.5 (460)	1	1	101	100	1.1	C	Plate
SA/AS 1548	PT490	...	71 (490)	1	2	101	100	1.2	C	Plate
SA/CSA–G40.21	38W	...	60 (415)	1	1	101	100	1.1	C–Mn–Si	Plate, bar & shapes
SA/CSA–G40.21	44W	...	65 (450)	1	1	101	100	1.2	C–Mn–Si	Plate, bar & shapes
SA/CSA–G40.21	50W	...	65 (450)	1	1	101	100	1.2	C–Mn–Si	Plate, bar & shapes
SA/GB 713	15CrMoR	...	64 (440)	4	1	101	110	5.1	1Cr–0.5Mo	Plate > 4 in. (100 mm) ≤ 6 in. (150 mm)
SA/GB 713	15CrMoR	...	65 (450)	4	1	101	110	5.1	1Cr–0.5Mo	Plate > 0.25 in. (6 mm) ≤ 4 in. (100 mm)
SA/GB 713	Q345R	...	68 (470)	1	1	101	100	1.1	C–Mn	Plate > 6 in. (150 mm) ≤ 10 in. (250 mm)
SA/GB 713	Q345R	...	69.5 (480)	1	1	101	100	1.2	C–Mn	Plate > 4 in. (100 mm) ≤ 6 in. (150 mm)

Copyrighted material licensed to Fermi National Laboratory by Clarivate Analytics (US) LLC, subscriptions.techstreet.com, downloaded on 2020-09-23 17:45:20 +0000 by Fermi National Laboratory User.
No further reproduction or distribution is permitted.

Table QW/QB-422
Ferrous and Nonferrous P-Numbers
Grouping of Base Metals for Qualification (Cont'd)

Spec. No.	Designation, Type, or Grade	UNS No.	Minimum Specified Tensile, ksi (MPa)	Welding P-No.	Welding Group No.	Brazing P-No.	Brazing AWS B2.2 BM	ISO 15608 Group	Nominal Composition	Typical Product Form
						Ferrous (Cont'd)				
SA/GB 713	Q345R	...	71 (490)	1	2	101	100	1.2	C–Mn	Plate > 1.5 in. (36 mm) ≤ 4 in. (100 mm)
SA/GB 713	Q345R	...	72.5 (500)	1	2	101	100	1.2	C–Mn	Plate > 0.65 in. (16 mm) ≤ 1.5 in. (36 mm)
SA/GB 713	Q345R	...	74 (510)	1	2	101	100	1.2	C–Mn	Plate > 0.125 in. (3 mm) ≤ 0.65 in. (16 mm)
SA/GB 713	Q370R	...	75.5 (520)	1	2	101	100	1.2	C	Plate > 1.4 in. (36 mm) ≤ 2.4 in. (60 mm)
SA/GB 713	Q370R	...	77 (530)	1	2	101	100	1.2	C	Plate > 0.65 in. (16 mm) ≤ 1.4 in. (36 mm)
SA/GB 713	Q370R	...	77 (530)	1	2	101	100	1.3	C	Plate > 0.375 in. (10 mm) ≤ 0.65 in. (16 mm)
SA/IS 2062	E250 A	...	59.5 (410)	1	1	101	100	1.1	C–Mn–Si	Plate, bars & shapes
SA/IS 2062	E250 B	...	59.5 (410)	1	1	101	100	1.1	C–Mn–Si	Plate, bars & shapes
SA/IS 2062	E250 C	...	59.5 (410)	1	1	101	100	1.1	C–Mn–Si	Plate, bars & shapes
SA/JIS G3118	SGV480	...	70 (485)	1	2	101	100	1.2	C–Mn–Si	Plate
SA/JIS G4303	SUS 302	S30200	75 (515)	8	1	102	130	8.1	18Cr–8Ni	Bars & shapes
SA/JIS G4303	SUS 304	S30400	75 (515)	8	1	102	130	8.1	18Cr–8Ni	Bars & shapes
SA/JIS G4303	SUS 304L	S30403	70 (485)	8	1	102	130	8.1	18Cr–8Ni	Bars & shapes
SA/JIS G4303	SUS 309S	S30908	75 (515)	8	2	102	130	8.2	23Cr–12Ni	Bars & shapes
SA/JIS G4303	SUS 310S	S31008	75 (515)	8	2	102	130	8.2	25Cr–20Ni	Bars & shapes
SA/JIS G4303	SUS 316	S31600	75 (515)	8	1	102	130	8.1	16Cr–12Ni–2Mo	Bars & shapes
SA/JIS G4303	SUS 316L	S31603	70 (485)	8	1	102	130	8.1	16Cr–12Ni–2Mo	Bars & shapes
SA/JIS G4303	SUS 321	S32100	75 (515)	8	1	102	140	8.1	18Cr–10Ni–Ti	Bars & shapes
SA/JIS G4303	SUS 347	S34700	75 (515)	8	1	102	130	8.1	18Cr–10Ni–Cb	Bars & shapes
SA/JIS G4303	SUS 405	S40500	60 (415)	7	1	102	160	7.1	12Cr–Al	Bars & shapes
SA/NF A 36–215	P440 NJ4	...	91.5 (630)	10A	1	101	100	4.1	Mn–0.5Ni–V	Plate

Copyrighted material licensed to Fermi National Laboratory by Clarivate Analytics (US) LLC, subscriptions.techstreet.com, downloaded on 2020-09-23 17:45:20 +0000 by Fermi National Laboratory User.
No further reproduction or distribution is permitted.

Table QW/QB-422
Ferrous and Nonferrous P-Numbers
Grouping of Base Metals for Qualification (Cont'd)

Spec. No.	Alloy, Type, or Grade	UNS No.	Minimum Specified Tensile, ksi (MPa)	Welding P-No.	Brazing P-No.	Brazing AWS B2.2 BM	ISO 15608 Group	Nominal Composition	Typical Product Form
					Nonferrous				
A/SA–182	F58	S31266	109 (750)	45	102	420	8.2	24Cr–22Ni–6Mo–3Mn–Cu–W–N	Forgings
A/SA–240	...	S31266	109 (750)	45	102	420	8.2	24Cr–22Ni–6Mo–3Mn–Cu–W–N	Plate, sheet & strip
A/SA–240	...	S31277	112 (770)	45	111	420	8.2	27Ni–22Cr–7Mo–Mn–Cu	Plate, sheet & strip
A/SA–351	CN3MN	J94651	80 (550)	45	111	420	8.2	46Fe–24Ni–21Cr–6Mo–Cu–N	Castings
A/SA–351	CN7M	N08007	62 (425)	45	111	420	8.2	28Ni–19Cr–Cu–Mo	Castings
A/SA–351	CT15C	N08151	63 (435)	45	111	420	45	32Ni–45Fe–20Cr–Cb	Castings
A/SA–351	HT30	N08603	65 (450)	45	111	420	45	35Ni–15Cr–0.5Mo	Castings
A/SA–358	...	S31266	109 (750)	45	102	420	8.2	24Cr–22Ni–6Mo–3Mn–Cu–W–N	Fusion welded pipe
A/SA–494	M35–2	N04020	65 (450)	42	110	400	42	67Ni–30Cu–Fe–Si	Castings
A/SA–494	CY40	N06040	70 (485)	43	111	420	43	72Ni–15Cr–8Fe–Si	Castings
A/SA–494	CU5MCuC	N08826	75 (515)	45	111	420	45	42Ni–21.5Cr–3Mo–2.3Cu	Castings
A/SA–494	M30C	N24130	65 (450)	42	110	400	42	67Ni–30Cu–2Fe–Cb	Castings
A/SA–494	M35–1	N24135	65 (450)	42	110	400	42	67Ni–30Cu–2Fe–Cb	Castings
A/SA–494	CX2MW	N26022	80 (550)	43	111	420	44	59Ni–22Cr–14Mo–4Fe–3W	Castings
A/SA–494	CW2M	N26455	72 (495)	43	111	420	43	66Ni–16Mo–16Cr–Fe–W	Castings
A/SA–494	CW6MC	N26625	70 (485)	43	111	420	43	60Ni–21.5Cr–9Mo–4Cb–Fe	Castings
A/SA–494	N7M	N30007	76 (525)	44	112	410	44	65Ni–31.5Mo–1.5Fe–Cr	Castings
A/SA–494	CW6M	N30107	72 (495)	44	112	420	44	56Ni–19Mo–18Cr–2Fe	Castings
B16	...	C36000	40 (275)	...	107	320	NA	65Cu–Zn–3Pb	Bar > 1 in. (25 mm)
B16	...	C36000	44 (305)	...	107	320	NA	65Cu–Zn–3Pb	Bar ≤ 1 in. (25 mm)
B16	...	C36000	40 (275)	...	107	320	NA	65Cu–Zn–3Pb	Rod > 2 in. (51 mm)
B16	...	C36000	44 (305)	...	107	320	NA	65Cu–Zn–3Pb	Rod > 1 in.–2 in. (25 mm–51 mm), incl.
B16	...	C36000	48 (330)	...	107	320	NA	65Cu–Zn–3Pb	Rod ≤ 1 in. (25 mm)
B16.18	...	C83600	30 (205)	...	107	320	NA	5Sn–5Zn–5Pb	Cast fittings
B16.18	...	C83800	30 (205)	...	107	320	NA	4Sn–6.5Zn–6Pb	Cast fittings
B16.18	...	C84400	29 (200)	...	107	320	NA	2.5Sn–8.5Zn–7Pb	Cast fittings
B16.22	...	C10200	30 (205)	...	107	300	NA	99.95Cu–P	Wrought piping fittings
B16.22	...	C12000	30 (205)	...	107	300	NA	99.9Cu–P	Wrought piping fittings
B16.22	...	C12200	30 (205)	...	107	300	NA	99.9Cu–P	Wrought piping fittings
B16.22	...	C23000	40 (275)	...	107	300	NA	85Cu–15Zn	Wrought piping fittings
B16.50	...	C10200	30 (205)	...	107	300	NA	99.95Cu–P	Wrought piping fittings
B16.50	...	C12000	30 (205)	...	107	300	NA	99.9Cu–P	Wrought piping fittings

Copyrighted material licensed to Fermi National Laboratory by Clarivate Analytics (US) LLC, subscriptions.techstreet.com, downloaded on 2020-09-23 17:45:20 +0000 by Fermi National Laboratory User.
No further reproduction or distribution is permitted.

Table QW/QB-422
Ferrous and Nonferrous P-Numbers
Grouping of Base Metals for Qualification (Cont'd)

Spec. No.	Alloy, Type, or Grade	UNS No.	Minimum Specified Tensile, ksi (MPa)	Welding P-No.	Brazing P-No.	Brazing AWS B2.2 BM	ISO 15608 Group	Nominal Composition	Typical Product Form
					Nonferrous (Cont'd)				
B16.50	...	C12200	30 (205)	...	107	300	NA	99.9Cu–P	Wrought piping fittings
B16.50	...	C23000	40 (275)	...	107	300	NA	85Cu–15Zn	Wrought piping fittings
B/SB–26	T6	A03560	30 (205)	26	...	210	24.2	Al–Si–Mg	Castings
B/SB–26	T71	A03560	25 (170)	26	...	210	24.2	Al–Si–Mg	Castings
B/SB–26	...	A24430	17 (115)	26	...	210	24.1	Al–Si	Castings
B/SB–42	...	C10200	30 (205)	31	107	300	31	99.95Cu–P	Smls. pipe
B/SB–42	...	C12000	30 (205)	31	107	300	31	99.9Cu–P	Smls. pipe
B/SB–42	...	C12200	30 (205)	31	107	300	31	99.9Cu–P	Smls. pipe
B/SB–43	...	C23000	40 (275)	32	107	300	32.1	85Cu–15Zn	Smls. pipe
B/SB–61	...	C92200	30 (205)	...	107	320	NA	88Cu–Sn–Zn–Pb	Castings
B/SB–62	...	C83600	30 (205)	...	107	320	NA	85Cu–5Sn–5Zn–5Pb	Castings
B68	...	C10200	30 (205)	31	107	300	31	99.95Cu–P	Tube
B68	...	C12000	30 (205)	31	107	300	31	99.9Cu–P	Tube
B68	...	C12200	30 (205)	31	107	300	31	99.9Cu–P	Tube
B/SB–75	...	C10200	30 (205)	31	107	300	31	99.95Cu–P	Smls. tube
B/SB–75	...	C12000	30 (205)	31	107	300	31	99.9Cu–P	Smls. tube
B/SB–75	...	C12200	30 (205)	31	107	300	31	99.9Cu–P	Smls. tube
B88	...	C10200	30 (205)	31	107	300	31	99.95Cu–P	Tube
B88	...	C12000	30 (205)	31	107	300	31	99.9Cu–P	Tube
B88	...	C12200	30 (205)	31	107	300	31	99.9Cu–P	Tube
B/SB–96	...	C65500	50 (345)	33	107	330	37	97Cu–3Si	Plate, sheet, strip & bar
B/SB–98	...	C65100	40 (275)	33	107	330	37	98.5Cu–1.5Si	Rod, bar & shapes
B/SB–98	...	C65500	52 (360)	33	107	330	37	97Cu–3Si	Rod, bar & shapes
B/SB–98	...	C66100	52 (360)	33	107	330	37	94Cu–3Si	Rod, bar & shapes
B/SB–111	...	C10200	30 (205)	31	107	300	31	99.95Cu–P	Smls. tube
B/SB–111	...	C12000	30 (205)	31	107	300	31	99.9Cu–P	Smls. tube
B/SB–111	...	C12200	30 (205)	31	107	300	31	99.9Cu–P	Smls. tube
B/SB–111	...	C14200	30 (205)	31	107	300	31	99.4Cu–As–P	Smls. tube
B/SB–111	...	C19200	38 (260)	31	107	300	31	99.7Cu–Fe–P	Smls. tube
B/SB–111	...	C23000	40 (275)	32	107	300	32.1	85Cu–15Zn	Smls. tube

Copyrighted material licensed to Fermi National Laboratory by Clarivate Analytics (US) LLC, subscriptions.techstreet.com, downloaded on 2020-09-23 17:45:20 +0000 by Fermi National Laboratory User.
No further reproduction or distribution is permitted.

Table QW/QB-422
Ferrous and Nonferrous P-Numbers
Grouping of Base Metals for Qualification (Cont'd)

Spec. No.	Alloy, Type, or Grade	UNS No.	Minimum Specified Tensile, ksi (MPa)	Welding P-No.	Brazing P-No.	Brazing AWS B2.2 BM	ISO 15608 Group	Nominal Composition	Typical Product Form
					Nonferrous (Cont'd)				
B/SB–111	...	C28000	50 (345)	32	107	300	32.1	60Cu–40Zn	Smls. tube
B/SB–111	...	C44300	45 (310)	32	107	300	32.2	71Cu–28Zn–1Sn–0.06As	Smls. tube
B/SB–111	...	C44400	45 (310)	32	107	300	32.2	71Cu–28Zn–1Sn–0.06Sb	Smls. tube
B/SB–111	...	C44500	45 (310)	32	107	300	32.2	71Cu–28Zn–1Sn–0.06P	Smls. tube
B/SB–111	...	C60800	50 (345)	35	108	360	35	95Cu–5Al	Smls. tube
B/SB–111	...	C68700	50 (345)	32	108	350	32.2	78Cu–20Zn–2Al	Smls. tube
B/SB–111	...	C70400	38 (260)	34	107	300	34	95Cu–5Ni	Smls. tube
B/SB–111	...	C70600	40 (275)	34	107	300	34	90Cu–10Ni	Smls. tube
B/SB–111	...	C70620	40 (275)	34	107	300	34	90Cu–10Ni	Smls. tube
B/SB–111	...	C71000	45 (310)	34	107	300	34	80Cu–20Ni	Smls. tube
B/SB–111	...	C71500	52 (360)	34	107	300	34	70Cu–30Ni	Smls. tube
B/SB–111	...	C71520	52 (360)	34	107	300	34	70Cu–30Ni	Smls. tube
B/SB–111	...	C72200	45 (310)	34	107	300	34	80Cu–16Ni–0.75Fe–0.5Cr	Smls. tube
B/SB–127	...	N04400	70 (485)	42	110	400	42	67Ni–30Cu	Plate, sheet & strip
B/SB–135	...	C23000	40 (275)	32	107	300	32.1	85Cu–15Zn	Smls. tube
B/SB–148	...	C95200	65 (450)	35	108	360	35	88Cu–9Al–3Fe	Castings
B/SB–148	...	C95300	65 (450)	35	108	360	35	89Cu–10Al–1Fe	Castings
B/SB–148	...	C95400	75 (515)	35	108	360	35	85Cu–11Al–4Fe	Castings
B/SB–148	...	C95500	90 (620)	35	108	360	35	82Cu–11Al–4Fe–3Mn	Castings
B/SB–148	...	C95600	60 (415)	35	108	360	35	90Cu–7Al–3Si	Castings
B/SB–148	...	C95800	85 (585)	35	108	360	35	81Cu–9Al–5Ni–4Fe–1Mn	Castings
B/SB–148	...	C95820	94 (650)	35	108	360	35	81Cu–9Al–5Ni–5Fe–1Mn	Castings
B/SB–150	...	C61400	70 (485)	35	108	360	35	90Cu–7Al–3Fe	Rod & bar
B/SB–150	...	C62300	75 (515)	35	108	360	35	88Cu–9Al–3Fe	Rod (round)
B/SB–150	...	C63000	85 (585)	35	108	360	35	81Cu–10Al–5Ni–3Fe	Rod & bar
B/SB–150	...	C64200	70 (485)	35	108	360	35	91Cu–7Al–2Si	Rod & bar
B/SB–151	...	C70600	38 (260)	34	107	300	34	90Cu–10Ni	Rod & bar
B/SB–151	...	C70620	38 (260)	34	107	300	34	90Cu–10Ni	Rod & bar
B/SB–152	...	C10200	30 (205)	31	107	300	31	99.95Cu–P	Plate, sheet, strip & bar
B/SB–152	...	C10400	30 (205)	31	107	300	31	99.95Cu + Ag	Plate, sheet, strip & bar
B/SB–152	...	C10500	30 (205)	31	107	300	31	99.95Cu + Ag	Plate, sheet, strip & bar
B/SB–152	...	C10700	30 (205)	31	107	300	31	99.95Cu + Ag	Plate, sheet, strip & bar
B/SB–152	...	C11000	30 (205)	31	107	300	31	99.90Cu	Plate, sheet, strip & bar

Copyrighted material licensed to Fermi National Laboratory by Clarivate Analytics (US) LLC, subscriptions.techstreet.com, downloaded on 2020-09-23 17:45:20 +0000 by Fermi National Laboratory User.
No further reproduction or distribution is permitted.

Table QW/QB-422
Ferrous and Nonferrous P-Numbers
Grouping of Base Metals for Qualification (Cont'd)

Spec. No.	Alloy, Type, or Grade	UNS No.	Minimum Specified Tensile, ksi (MPa)	Welding P-No.	Brazing P-No.	Brazing AWS B2.2 BM	ISO 15608 Group	Nominal Composition	Typical Product Form
					Nonferrous (Cont'd)				
B/SB–152	...	C12200	30 (205)	31	107	300	31	99.9Cu–P	Plate, sheet, strip & bar
B/SB–152	...	C12300	30 (205)	31	107	300	31	99.9Cu–P	Plate, sheet, strip & bar
B/SB–152	...	C14200	30 (205)	31	107	300	31	99.4Cu–As–P	Plate, sheet, strip & bar
B/SB–160	...	N02200	55 (380)	41	110	400	41	99.0Ni	Rod & bar
B/SB–160	...	N02201	50 (345)	41	110	400	41	99.0Ni–Low C	Rod & bar
B/SB–161	...	N02200	55 (380)	41	110	400	41	99.0Ni	Smls. pipe & tube
B/SB–161	...	N02201	50 (345)	41	110	400	41	99.0Ni–Low C	Smls. pipe & tube
B/SB–162	...	N02200	55 (380)	41	110	400	41	99.0Ni	Plate, sheet & strip
B/SB–162	...	N02201	50 (345)	41	110	400	41	99.0Ni–Low C	Plate, sheet & strip
B/SB–163	...	N02200	55 (380)	41	110	400	41	99.0Ni	Smls. tube
B/SB–163	...	N02201	50 (345)	41	110	400	41	99.0Ni–Low C	Smls. tube
B/SB–163	...	N04400	70 (485)	42	110	400	42	67Ni–30Cu	Smls. tube
B/SB–163	...	N06025	98 (675)	43	111	420	43	63Ni–25Cr–10Fe–2Al–Ti–Y–Zr	Smls. tube
B/SB–163	...	N06600	80 (550)	43	111	420	43	72Ni–15Cr–8Fe	Smls. tube
B/SB–163	...	N06601	80 (550)	43	111	420	43	60Ni–23Cr–12Fe–Al	Smls. tube
B/SB–163	...	N06690	85 (585)	43	111	420	43	58Ni–29Cr–9Fe	Smls. tube
B/SB–163	...	N08120	90 (620)	45	111	430	45	37Ni–33Fe–25Cr	Smls. tube
B/SB–163	...	N08800	75 (515)	45	111	430	45	33Ni–42Fe–21Cr	Smls. tube
B/SB–163	...	N08801	65 (450)	45	111	430	45	32Ni–45Fe–20.5Cr–Ti	Smls. tube
B/SB–163	...	N08810	65 (450)	45	111	430	45	33Ni–42Fe–21Cr	Smls. tube
B/SB–163	...	N08811	65 (450)	45	111	430	45	33Ni–42Fe–21Cr–Al–Ti	Smls. tube
B/SB–163	...	N08825	85 (585)	45	111	430	45	42Ni–21.5Cr–3Mo–2.3Cu	Smls. tube
B/SB–164	...	N04400	70 (485)	42	110	400	42	67Ni–30Cu	Rod, bar & wire
B/SB–164	...	N04405	70 (485)	42	110	400	42	67Ni–30Cu	Rod, bar & wire
B/SB–165	...	N04400	70 (485)	42	110	400	42	67Ni–30Cu	Smls. pipe & tube
B/SB–166	...	N06025	98 (675)	43	111	420	43	63Ni–25Cr–10Fe–2Al–Ti–Y–Zr	Rod, bar & wire
B/SB–166	...	N06045	90 (620)	46	111	420	45	46Ni–27Cr–23Fe–2.75Si	Rod, bar & wire
B/SB–166	...	N06600	80 (550)	43	111	420	43	72Ni–15Cr–8Fe	Rod, bar & wire
B/SB–166	...	N06601	80 (550)	43	111	420	43	60Ni–23Cr–12Fe–Al	Rod, bar & wire
B/SB–166	...	N06617	95 (655)	43	111	420	46	52Ni–22Cr–13Co–9Mo	Rod, bar & wire
B/SB–166	...	N06690	85 (585)	43	111	420	43	58Ni–29Cr–9Fe	Rod, bar & wire
B/SB–167	...	N06025	98 (675)	43	111	420	43	63Ni–25Cr–10Fe–2Al–Ti–Y–Zr	Smls. pipe & tube

Copyrighted material licensed to Fermi National Laboratory by Clarivate Analytics (US) LLC, subscriptions.techstreet.com, downloaded on 2020-09-23 17:45:20 +0000 by Fermi National Laboratory User.
No further reproduction or distribution is permitted.

Table QW/QB-422
Ferrous and Nonferrous P-Numbers
Grouping of Base Metals for Qualification (Cont'd)

Spec. No.	Alloy, Type, or Grade	UNS No.	Minimum Specified Tensile, ksi (MPa)	Welding P-No.	Brazing P-No.	Brazing AWS B2.2 BM	ISO 15608 Group	Nominal Composition	Typical Product Form
					Nonferrous (Cont'd)				
B/SB–167	...	N06045	90 (620)	46	111	420	45	46Ni–27Cr–23Fe–2.75Si	Smls. pipe & tube
B/SB–167	...	N06600	75 (515)	43	111	420	43	72Ni–15Cr–8Fe	Smls. pipe & tube
B/SB–167	...	N06601	80 (550)	43	111	420	43	60Ni–23Cr–12Fe–Al	Smls. pipe & tube
B/SB–167	...	N06617	95 (655)	43	111	420	46	52Ni–22Cr–13Co–9Mo	Smls. pipe & tube
B/SB–167	...	N06690	75 (515)	43	111	420	43	58Ni–29Cr–9Fe	Smls. pipe & tube
B/SB–168	...	N06025	98 (675)	43	111	420	43	63Ni–25Cr–10Fe–2Al–Ti–Y–Zr	Plate, sheet & strip
B/SB–168	...	N06045	90 (620)	46	111	420	45	46Ni–27Cr–23Fe–2.75Si	Plate, sheet & strip
B/SB–168	...	N06600	80 (550)	43	111	420	43	72Ni–15Cr–8Fe	Plate, sheet & strip
B/SB–168	...	N06601	80 (550)	43	111	420	43	60Ni–23Cr–12Fe–Al	Plate, sheet & strip
B/SB–168	...	N06617	95 (655)	43	111	420	46	52Ni–22Cr–13Co–9Mo	Plate, sheet & strip
B/SB–168	...	N06690	85 (585)	43	111	420	43	58Ni–29Cr–9Fe	Plate, sheet & strip
B/SB–169	...	C61400	65 (450)	35	108	360	35	90Cu–7Al–3Fe	Plate, sheet, strip & bar > 2 in.–5 in. (51 mm–127 mm) incl.
B/SB–169	...	C61400	70 (485)	35	108	360	35	90Cu–7Al–3Fe	Plate, sheet, strip & bar > ½ in.–2 in. (13 mm–51 mm) incl.
B/SB–169	...	C61400	72 (495)	35	108	360	35	90Cu–7Al–3Fe	Plate, sheet, strip & bar ≤ ½ in. (13 mm)
B/SB–171	...	C36500	40 (275)	32	107	310	32.2	60Cu–39Zn–Pb	Plate & sheet
B/SB–171	...	C44300	45 (310)	32	107	300	32.2	71Cu–28Zn–1Sn–0.06As	Plate & sheet
B/SB–171	...	C44400	45 (310)	32	107	300	32.2	71Cu–28Zn–1Sn–0.06Sb	Plate & sheet
B/SB–171	...	C44500	45 (310)	32	107	300	32.2	71Cu–28Zn–1Sn–0.06P	Plate & sheet
B/SB–171	...	C46400	50 (345)	32	107	300	32.2	60Cu–39Zn–Sn	Plate & sheet
B/SB–171	...	C46500	50 (345)	32	107	300	32.2	60Cu–39Zn–As	Plate & sheet
B/SB–171	...	C61400	65 (450)	35	108	360	35	90Cu–7Al–3Fe	Plate & sheet > 2 in.–5 in. (51 mm–127 mm) incl.
B/SB–171	...	C61400	70 (485)	35	108	360	35	90Cu–7Al–3Fe	Plate & sheet ≤ 2 in. (51 mm)
B/SB–171	...	C63000	80 (550)	35	108	360	35	81Cu–10Al–5Ni–3Fe	Plate & sheet > 3½ in.–5 in. (89 mm–127 mm), incl.
B/SB–171	...	C63000	85 (585)	35	108	360	35	81Cu–10Al–5Ni–3Fe	Plate & sheet > 2 in.–3.5 in. (51 mm–89 mm), incl.
B/SB–171	...	C63000	90 (620)	35	108	360	35	81Cu–10Al–5Ni–3Fe	Plate & sheet ≤ 2 in. (51 mm)
B/SB–171	...	C70600	40 (275)	34	107	300	34	90Cu–10Ni	Plate & sheet
B/SB–171	...	C70620	40 (275)	34	107	300	34	90Cu–10Ni	Plate & sheet
B/SB–171	...	C71500	45 (310)	34	107	300	34	70Cu–30Ni	Plate & sheet > 2.5 in.–5 in. (64 mm–127 mm), incl.
B/SB–171	...	C71500	50 (345)	34	107	300	34	70Cu–30Ni	Plate & sheet ≤ 2.5 in. (64 mm)

Copyrighted material licensed to Fermi National Laboratory by Clarivate Analytics (US) LLC, subscriptions.techstreet.com, downloaded on 2020-09-23 17:45:20 +0000 by Fermi National Laboratory User.
No further reproduction or distribution is permitted.

Table QW/QB-422
Ferrous and Nonferrous P-Numbers
Grouping of Base Metals for Qualification (Cont'd)

Spec. No.	Alloy, Type, or Grade	UNS No.	Minimum Specified Tensile, ksi (MPa)	Welding P-No.	Brazing P-No.	Brazing AWS B2.2 BM	ISO 15608 Group	Nominal Composition	Typical Product Form
					Nonferrous (Cont'd)				
B/SB–171	...	C71520	45 (310)	34	107	300	34	70Cu–30Ni	Plate & sheet > 2.5 in.–5 in. (64 mm–127 mm) incl.
B/SB–171	...	C71520	50 (345)	34	107	300	34	70Cu–30Ni	Plate & sheet ≤ 2.5 in. (64 mm)
B/SB–187	O60	C10200	28 (195)	31	107	300	31	99.95Cu–P	Rod & bar
B/SB–187	O60	C11000	28 (195)	31	107	300	31	99.9Cu	Rod & bar
B/SB–209	Alclad 3003	...	13 (90)	21	104	200	...	Al–Mn–Cu	Plate & sheet > 0.05 in. (1.3 mm) < 0.5 in. (13 mm)
B/SB–209	Alclad 3003	...	14 (97)	21	104	200	...	Al–Mn–Cu	Plate & sheet ≥ 0.5 in.–3 in. (13 mm–76 mm), incl.
B/SB–209	Alclad 3004	...	21 (145)	22	104	220	...	Al–Mn–Mg	Plate & sheet > 0.05 in. (1.3 mm) < 0.5 in. (13 mm)
B/SB–209	Alclad 3004	...	22 (150)	22	104	220	...	Al–Mn–Mg	Plate & sheet ≥ 0.5 in.–3 in. (13 mm–76 mm), incl.
B/SB–209	Alclad 6061	...	24 (165)	23	105	200	...	Al–Mg–Si–Cu	Plate & sheet
B/SB–209	1060	A91060	8 (55)	21	104	200	21	99.60Al	Plate & sheet
B/SB–209	1100	A91100	11 (76)	21	104	200	21	99.0Al–Cu	Plate & sheet
B/SB–209	3003	A93003	14 (97)	21	104	200	22.1	Al–Mn–Cu	Plate & sheet
B/SB–209	3004	A93004	22 (150)	22	104	220	22.2	Al–Mn–Mg	Plate & sheet
B/SB–209	5050	A95050	18 (125)	21	105	220	22.2	Al–1.5Mg	Plate & sheet
B/SB–209	5052	A95052	25 (170)	22	105	220	22.3	Al–2.5Mg	Plate & sheet
B/SB–209	5083	A95083	36 (250)	25	105	220	22.4	Al–4.4Mg–Mn	Plate & sheet > 7 in.–8 in. (178 mm–203 mm), incl.
B/SB–209	5083	A95083	37 (255)	25	105	220	22.4	Al–4.4Mg–Mn	Plate & sheet > 5 in.–7 in. (127 mm–178 mm), incl.
B/SB–209	5083	A95083	38 (260)	25	105	220	22.4	Al–4.4Mg–Mn	Plate & sheet > 3 in.–5 in. (76 mm–127 mm), incl.
B/SB–209	5083	A95083	39 (270)	25	105	220	22.4	Al–4.4Mg–Mn	Plate & sheet > 1.5 in.–3 in. (38 mm–76 mm), incl.
B/SB–209	5083	A95083	40 (275)	25	105	220	22.4	Al–4.4Mg–Mn	Plate & sheet > 0.05 in.–1.5 in. (1.3 mm–38 mm), incl.
B/SB–209	5086	A95086	35 (240)	25	105	220	22.4	Al–4.0Mg–Mn	Plate & sheet
B/SB–209	5154	A95154	30 (205)	22	105	220	22.4	Al–3.5Mg	Plate & sheet
B/SB–209	5254	A95254	30 (205)	22	105	220	22.4	Al–3.5Mg	Plate & sheet
B/SB–209	5454	A95454	31 (215)	22	105	220	22.3	Al–2.7Mg–Mn	Plate & sheet
B/SB–209	5456	A95456	38 (260)	25	105	220	22.4	Al–5.1Mg–Mn	Plate & sheet > 7 in.–8 in. (178 mm–203 mm), incl.

Copyrighted material licensed to Fermi National Laboratory by Clarivate Analytics (US) LLC, subscriptions.techstreet.com, downloaded on 2020-09-23 17:45:20 +0000 by Fermi National Laboratory User.
No further reproduction or distribution is permitted.

Table QW/QB-422
Ferrous and Nonferrous P-Numbers
Grouping of Base Metals for Qualification (Cont'd)

Spec. No.	Alloy, Type, or Grade	UNS No.	Minimum Specified Tensile, ksi (MPa)	Welding P-No.	Brazing P-No.	Brazing AWS B2.2 BM	ISO 15608 Group	Nominal Composition	Typical Product Form
					Nonferrous (Cont'd)				
B/SB–209	5456	A95456	39 (270)	25	105	220	22.4	Al–5.1Mg–Mn	Plate & sheet > 5 in.–7 in. (127 mm–178 mm), incl.
B/SB–209	5456	A95456	40 (275)	25	105	220	22.4	Al–5.1Mg–Mn	Plate & sheet > 3 in.–5 in. (76 mm–127 mm), incl.
B/SB–209	5456	A95456	41 (285)	25	105	220	22.4	Al–5.1Mg–Mn	Plate & sheet > 1.5 in.–3 in. (38 mm–76 mm), incl.
B/SB–209	5456	A95456	42 (290)	25	105	220	22.4	Al–5.1Mg–Mn	Plate & sheet > 0.05 in.–1.5 in. (1.3 mm–38 mm), incl.
B/SB–209	5652	A95652	25 (170)	22	105	220	22.3	Al–2.5Mg	Plate & sheet
B/SB–209	6061	A96061	24 (165)	23	105	220	23.1	Al–Mg–Si–Cu	Plate & sheet
B/SB–210	Alclad 3003	...	13 (90)	21	104	200	...	Al–Mn–Cu	Smls. tube
B/SB–210	1060	A91060	8.5 (59)	21	104	200	21	99.60Al	Smls. tube
B/SB–210	3003	A93003	14 (97)	21	104	200	22.1	Al–Mn–Cu	Smls. tube
B/SB–210	5052	A95052	25 (170)	22	105	220	22.3	Al–2.5Mg	Smls. tube
B/SB–210	5083	A95083	39 (270)	25	105	220	22.4	Al–4.4Mg–Mn	Smls. tube
B/SB–210	5086	A95086	35 (240)	25	105	220	22.4	Al–4.0Mg–Mn	Smls. tube
B/SB–210	5154	A95154	30 (205)	22	105	220	22.4	Al–3.5Mg	Smls. tube
B/SB–210	5456	A95456	41 (285)	25	105	220	22.4	Al–5.1Mg–Mn	Smls. tube
B/SB–210	6061	A96061	24 (165)	23	105	220	23.1	Al–Mg–Si–Cu	Smls. tube
B/SB–210	6063	A96063	17 (115)	23	105	210	23.1	Al–Mg–Si	Smls. tube
B/SB–211	6061	A96061	24 (165)	23	105	220	23.1	Al–Mg–Si–Cu	Bar, rod & wire
B/SB–221	1060	A91060	8.5 (59)	21	104	200	21	99.60Al	Bar, rod & shapes
B/SB–221	1100	A91100	11 (76)	21	104	200	21	99.0Al–Cu	Bar, rod & shapes
B/SB–221	3003	A93003	14 (97)	21	104	200	22.1	Al–Mn–Cu	Bar, rod & shapes
B/SB–221	5083	A95083	39 (270)	25	105	220	22.4	Al–4.4Mg–Mn	Bar, rod & shapes
B/SB–221	5154	A95154	30 (205)	22	105	220	22.4	Al–3.5Mg	Bar, rod & shapes
B/SB–221	5454	A95454	31 (215)	22	105	220	22.3	Al–2.7Mg–Mn	Bar, rod & shapes
B/SB–221	5456	A95456	41 (285)	25	105	220	22.4	Al–5.1Mg–Mn	Bar, rod & shapes
B/SB–221	6061	A96061	24 (165)	23	105	220	23.1	Al–Mg–Si–Cu	Bar, rod & shapes
B/SB–221	6063	A96063	17 (115)	23	105	210	23.1	Al–Mg–Si	Bar, rod & shapes
B/SB–234	Alclad 3003	...	13 (90)	21	104	200	...	Al–Mn–Cu	Smls. tube
B/SB–234	1060	A91060	8.5 (59)	21	104	200	21	99.60Al	Smls. tube

Copyrighted material licensed to Fermi National Laboratory by Clarivate Analytics (US) LLC, subscriptions.techstreet.com, downloaded on 2020-09-23 17:45:20 +0000 by Fermi National Laboratory User.
No further reproduction or distribution is permitted.

Table QW/QB-422
Ferrous and Nonferrous P-Numbers
Grouping of Base Metals for Qualification (Cont'd)

Spec. No.	Alloy, Type, or Grade	UNS No.	Minimum Specified Tensile, ksi (MPa)	Welding P-No.	Brazing P-No.	Brazing AWS B2.2 BM	ISO 15608 Group	Nominal Composition	Typical Product Form
					Nonferrous (Cont'd)				
B/SB–234	3003	A93003	14 (97)	21	104	200	22.1	Al–Mn–Cu	Smls. tube
B/SB–234	5052	A95052	25 (170)	22	105	220	22.3	Al–2.5Mg	Smls. tube
B/SB–234	5454	A95454	31 (215)	22	105	220	22.3	Al–2.7Mg–Mn	Smls. tube
B/SB–234	6061	A96061	24 (165)	23	105	220	23.1	Al–Mg–Si–Cu	Smls. tube
B/SB–241	Alclad 3003	...	13 (90)	21	104	200	...	Al–Mn–Cu	Smls. pipe & tube
B/SB–241	1060	A91060	8.5 (59)	21	104	200	21	99.60Al	Smls. pipe & tube
B/SB–241	1100	A91100	11 (76)	21	104	200	21	99.0Al–Cu	Smls. pipe & tube
B/SB–241	3003	A93003	14 (97)	21	104	200	22.1	Al–Mn–Cu	Smls. pipe & tube
B/SB–241	5052	A95052	25 (170)	22	105	220	22.3	Al–2.5Mg	Smls. pipe & tube
B/SB–241	5083	A95083	39 (270)	25	105	220	22.4	Al–4.4Mg–Mn	Smls. pipe & tube
B/SB–241	5086	A95086	35 (240)	25	105	220	22.4	Al–4.0Mg–Mn	Smls. pipe & tube
B/SB–241	5454	A95454	31 (215)	22	105	220	22.3	Al–2.7Mg–Mn	Smls. pipe & tube
B/SB–241	5456	A95456	41 (285)	25	105	220	22.4	Al–5.1Mg–Mn	Smls. pipe & tube
B/SB–241	6061	A96061	24 (165)	23	105	220	23.1	Al–Mg–Si–Cu	Smls. pipe & tube
B/SB–241	6063	A96063	17 (115)	23	105	210	23.1	Al–Mg–Si	Smls. pipe & tube
B/SB–247	3003	A93003	14 (97)	21	104	200	22.1	Al–Mn–Cu	Forgings
B/SB–247	5083	A95083	38 (260)	25	105	220	22.4	Al–4.4Mg–Mn	Forgings
B/SB–247	6061	A96061	24 (165)	23	105	220	23.1	Al–Mg–Si–Cu	Forgings
B/SB–265	1	R50250	35 (240)	51	115	500	51.1	Ti	Plate, sheet & strip
B/SB–265	2	R50400	50 (345)	51	115	500	51.2	Ti	Plate, sheet & strip
B/SB–265	2H	R50400	58 (400)	51	115	500	51.2	Ti	Plate, sheet & strip
B/SB–265	3	R50550	65 (450)	52	115	500	51.3	Ti	Plate, sheet & strip
B/SB–265	11	R52250	35 (240)	51	115	500	52	Ti–Pd	Plate, sheet & strip
B/SB–265	17	R52252	35 (240)	51	...	500	51.1	Ti–Pd	Plate, sheet & strip
B/SB–265	27	R52254	35 (240)	51	115	500	51.1	Ti–Ru	Plate, sheet & strip
B/SB–265	7	R52400	50 (345)	51	115	500	52	Ti–Pd	Plate, sheet & strip
B/SB–265	7H	R52400	58 (400)	51	115	500	52	Ti–Pd	Plate, sheet & strip
B/SB–265	16	R52402	50 (345)	51	115	500	51.2	Ti–Pd	Plate, sheet & strip
B/SB–265	16H	R52402	58 (400)	51	115	500	51.2	Ti–Pd	Plate, sheet & strip
B/SB–265	26	R52404	50 (345)	51	115	500	51.2	Ti–Ru	Plate, sheet & strip
B/SB–265	26H	R52404	58 (400)	51	115	500	51.2	Ti–Ru	Plate, sheet & strip
B/SB–265	12	R53400	70 (485)	52	115	500	52	Ti–0.3Mo–0.8Ni	Plate, sheet & strip
B/SB–265	38	R54250	130 (895)	54	115	500	53	Ti–4Al–2.5V–1.5Fe	Plate, sheet & strip
B/SB–265	9	R56320	90 (620)	53	115	500	53	Ti–3Al–2.5V	Plate, sheet & strip
B/SB–265	28	R56323	90 (620)	53	115	500	53	Ti–3Al–2.5V–0.1Ru	Plate, sheet & strip

Copyrighted material licensed to Fermi National Laboratory by Clarivate Analytics (US) LLC, subscriptions.techstreet.com, downloaded on 2020-09-23 17:45:20 +0000 by Fermi National Laboratory User.
No further reproduction or distribution is permitted.

Table QW/QB-422
Ferrous and Nonferrous P-Numbers
Grouping of Base Metals for Qualification (Cont'd)

Spec. No.	Alloy, Type, or Grade	UNS No.	Minimum Specified Tensile, ksi (MPa)	Welding P-No.	Brazing P-No.	Brazing AWS B2.2 BM	ISO 15608 Group	Nominal Composition	Typical Product Form
					Nonferrous (Cont'd)				
B/SB–271	...	C95200	65 (450)	35	108	360	35	88Cu–9Al–3Fe	Castings
B/SB–271	...	C95400	75 (515)	35	108	360	35	85Cu–11Al–4Fe	Castings
B280	102	C10200	30 (205)	31	107	300	31	99.95Cu–P	Smls. tube
B280	120	C12000	30 (205)	31	107	300	31	99.9Cu–P	Smls. tube
B280	122	C12200	30 (205)	31	107	300	31	99.9Cu–P	Smls. tube
B/SB–283	Cu	C11000	33 (230)	31	107	300	31	99.9Cu	Forgings
B/SB–283	Forging Brass	C37700	46 (315)	...	107	320	NA	60Cu–38Zn–2Pb	Forgings > 1.5 in. (38 mm)
B/SB–283	Forging Brass	C37700	50 (345)	...	107	320	NA	60Cu–38Zn–2Pb	Forgings ≤ 1.5 in. (38 mm)
B/SB–283	Naval Brass	C46400	64 (440)	32	107	300	32.2	60Cu–39Zn–Sn	Forgings
B/SB–283	High Si Bronze	C65500	52 (360)	33	107	330	31	97Cu–3Si	Forgings
B/SB–283	Mn Bronze	C67500	72 (495)	32	107	300	32.2	59Cu–39Zn–Fe–Sn	Forgings
B/SB–283	...	C70620	40 (275)	34	107	300	34	90Cu–10Ni	Forgings > 6 in. (150 mm)
B/SB–283	...	C70620	45 (310)	34	107	300	34	90Cu–10Ni	Forgings ≤ 6 in. (150 mm)
B/SB–283	...	C71520	45 (310)	34	107	300	34	70Cu–30Ni	Forgings > 6 in. (150 mm)
B/SB–283	...	C71520	50 (345)	34	107	300	34	70Cu–30Ni	Forgings ≤ 6 in. (150 mm)
B302	...	C12000	30 (205)	31	107	300	31	99.9Cu–P	Pipe
B302	...	C12200	30 (205)	31	107	300	31	99.9Cu–P	Pipe
B/SB–308	6061	A96061	24 (165)	23	105	220	23.1	Al–Mg–Si–Cu	Shapes
B/SB–315	...	C65500	50 (345)	33	107	330	33	97Cu–3Si	Smls. pipe & tube
B/SB–333	...	N10001	100 (690)	44	112	410	44	62Ni–28Mo–5Fe	Plate, sheet & strip ≥ 0.1875 in.–2.5 in. (5 mm –64 mm), incl.
B/SB–333	...	N10001	115 (795)	44	112	410	44	62Ni–28Mo–5Fe	Plate, sheet & strip < 0.1875 in. (5 mm)
B/SB–333	...	N10629	110 (760)	44	112	410	44	66Ni–28Mo–3Fe–1.3Cr–0.25Al	Plate, sheet & strip
B/SB–333	...	N10665	110 (760)	44	112	410	44	65Ni–28Mo–2Fe	Plate, sheet & strip
B/SB–333	...	N10675	110 (760)	44	112	410	44	65Ni–29.5Mo–2Fe–2Cr	Plate, sheet & strip
B/SB–335	...	N10001	100 (690)	44	112	410	44	62Ni–28Mo–5Fe	Rod > 1.5 in.–3.5 in. (38 mm–89 mm), incl.
B/SB–335	...	N10001	115 (795)	44	112	410	44	62Ni–28Mo–5Fe	Rod ≥ 0.3125 in.–1.5 in. (8 mm–38 mm), incl.
B/SB–335	...	N10629	110 (760)	44	112	410	44	66Ni–28Mo–3Fe–1.3Cr–0.25Al	Rod
B/SB–335	...	N10665	110 (760)	44	112	410	44	65Ni–28Mo–2Fe	Rod
B/SB–335	...	N10675	110 (760)	44	112	410	44	65Ni–29.5Mo–2Fe–2Cr	Rod
B/SB–338	1	R50250	35 (240)	51	115	500	51.1	Ti	Smls. & welded tube

Copyrighted material licensed to Fermi National Laboratory by Clarivate Analytics (US) LLC, subscriptions.techstreet.com, downloaded on 2020-09-23 17:45:20 +0000 by Fermi National Laboratory User.
No further reproduction or distribution is permitted.

Table QW/QB-422
Ferrous and Nonferrous P-Numbers
Grouping of Base Metals for Qualification (Cont'd)

Spec. No.	Alloy, Type, or Grade	UNS No.	Minimum Specified Tensile, ksi (MPa)	Welding P-No.	Brazing P-No.	Brazing AWS B2.2 BM	ISO 15608 Group	Nominal Composition	Typical Product Form
					Nonferrous (Cont'd)				
B/SB–338	2	R50400	50 (345)	51	115	500	51.2	Ti	Smls. & welded tube
B/SB–338	2H	R50400	58 (400)	51	115	500	51.2	Ti	Smls. & welded tube
B/SB–338	3	R50550	65 (450)	52	115	500	51.3	Ti	Smls. & welded tube
B/SB–338	7	R52400	50 (345)	51	115	500	52	Ti–Pd	Smls. & welded tube
B/SB–338	7H	R52400	58 (400)	51	115	500	52	Ti–Pd	Smls. & welded tube
B/SB–338	16	R52402	50 (345)	51	115	500	51.2	Ti–Pd	Smls. & welded tube
B/SB–338	16H	R52402	58 (400)	51	115	500	51.2	Ti–Pd	Smls. & welded tube
B/SB–338	26	R52404	50 (345)	51	115	500	51.2	Ti–Ru	Smls. & welded tube
B/SB–338	26H	R52404	58 (400)	51	115	500	51.2	Ti–Ru	Smls. & welded tube
B/SB–338	12	R53400	70 (485)	52	115	500	52	Ti–0.3Mo–0.8Ni	Smls. & welded tube
B/SB–338	38	R54250	130 (895)	54	115	500	53	Ti–4Al–2.5V–1.5Fe	Smls. & welded tube
B/SB–338	9	R56320	90 (620)	53	115	500	53	Ti–3Al–2.5V	Smls. & welded tube
B/SB–338	28	R56323	90 (620)	53	115	500	53	Ti–3Al–2.5V–0.1Ru	Smls. & welded tube
B345	1060	A91060	8.5 (59)	21	104	200	21	99.60Al	Smls. pipe & tube
B345	3003	A93003	14 (97)	21	104	200	22.1	Al–Mn–Cu	Smls. pipe & tube
B345	5083	A95083	39 (270)	25	105	220	22.4	Al–4.4Mg–Mn	Smls. pipe & tube
B345	5086	A95086	35 (240)	25	105	220	22.4	Al–4.0Mg–Mn	Smls. pipe & tube
B345	6061	A96061	24 (165)	23	105	220	23.1	Al–Mg–Si–Cu	Smls. pipe & tube
B345	6063	A96063	17 (115)	23	105	210	23.1	Al–Mg–Si	Smls. pipe & tube
B/SB–348	1	R50250	35 (240)	51	115	500	51.1	Ti	Bars & billets
B/SB–348	2	R50400	50 (345)	51	115	500	51.2	Ti	Bars & billets
B/SB–348	2H	R50400	58 (400)	51	115	500	51.2	Ti	Bars & billets
B/SB–348	3	R50550	65 (450)	52	115	500	51.3	Ti	Bars & billets
B/SB–348	7	R52400	50 (345)	51	115	500	52	Ti–Pd	Bars & billets
B/SB–348	7H	R52400	58 (400)	51	115	500	52	Ti–Pd	Bars & billets
B/SB–348	16	R52402	50 (345)	51	115	500	51.2	Ti–Pd	Bars & billets
B/SB–348	16H	R52402	58 (400)	51	115	500	51.2	Ti–Pd	Bars & billets
B/SB–348	26	R52404	50 (345)	51	115	500	51.2	Ti–Ru	Bars & billets
B/SB–348	26H	R52404	58 (400)	51	115	500	51.2	Ti–Ru	Bars & billets
B/SB–348	12	R53400	70 (485)	52	115	500	52	Ti–0.3Mo–0.8Ni	Bars & billets
B/SB–348	38	R54250	130 (895)	54	115	500	53	Ti–4Al–2.5V–1.5Fe	Bars & billets
B/SB–348	9	R56320	90 (620)	53	115	500	53	Ti–3Al–2.5V	Bars & billets
B/SB–348	28	R56323	90 (620)	53	115	500	53	Ti–3Al–2.5V–0.1Ru	Bars & billets
B/SB–359	...	C12200	30 (205)	31	107	300	31	99.9Cu–P	Smls. tube
B/SB–359	...	C44300	45 (310)	32	107	300	32.2	71Cu–28Zn–1Sn–0.06As	Smls. tube

Copyrighted material licensed to Fermi National Laboratory by Clarivate Analytics (US) LLC, subscriptions.techstreet.com, downloaded on 2020-09-23 17:45:20 +0000 by Fermi National Laboratory User.
No further reproduction or distribution is permitted.

Table QW/QB-422
Ferrous and Nonferrous P-Numbers
Grouping of Base Metals for Qualification (Cont'd)

Spec. No.	Alloy, Type, or Grade	UNS No.	Minimum Specified Tensile, ksi (MPa)	Welding P-No.	Brazing P-No.	Brazing AWS B2.2 BM	ISO 15608 Group	Nominal Composition	Typical Product Form
					Nonferrous (Cont'd)				
B/SB–359	...	C44400	45 (310)	32	107	300	32.2	71Cu–28Zn–1Sn–0.06Sb	Smls. tube
B/SB–359	...	C44500	45 (310)	32	107	300	32.2	71Cu–28Zn–1Sn–0.06P	Smls. tube
B/SB–359	...	C70600	40 (275)	34	107	300	34	90Cu–10Ni	Smls. tube
B/SB–359	...	C70620	40 (275)	34	107	300	34	90Cu–10Ni	Smls. tube
B/SB–359	...	C71000	45 (310)	34	107	300	34	80Cu–20Ni	Smls. tube
B/SB–359	...	C71500	52 (360)	34	107	300	34	70Cu–30Ni	Smls. tube
B/SB–359	...	C71520	52 (360)	34	107	300	34	70Cu–30Ni	Smls. tube
B361	WP Alclad 3003	A83003	13 (90)	21	104	200	...	Al–Mn–Cu	Fittings
B361	WP1060	A91060	8.5 (59)	21	104	200	21	99.60Al	Fittings
B361	WP1100	A91100	11 (76)	21	104	200	21	99.0Al–Cu	Fittings
B361	WP3003	A93003	14 (97)	21	104	200	22.1	Al–Mn–Cu	Fittings
B361	5083	A95083	39 (270)	25	105	220	22.4	Al–4.4Mg–Mn	Fittings
B361	5154	A95154	30 (205)	22	105	220	22.3	Al–3.5Mg	Fittings
B361	WP6061	A96061	24 (165)	23	105	220	23.1	Al–Mg–Si–Cu	Fittings
B361	WP6063	A96063	17 (115)	23	105	210	23.1	Al–Mg–Si	Fittings
B/SB–363	WPT 1	R50250	35 (240)	51	115	500	51.1	Ti	Smls. & welded fittings
B/SB–363	WPT 2	R50400	50 (345)	51	115	500	51.2	Ti	Smls. & welded fittings
B/SB–363	WPT 3	R50550	65 (450)	52	115	500	51.3	Ti	Smls. & welded fittings
B/SB–363	WPT 7	R52400	50 (345)	51	115	500	52	Ti–Pd	Smls. & welded fittings
B/SB–363	WPT 7H	R52400	58 (400)	51	115	500	52	Ti–Pd	Smls. & welded fittings
B/SB–363	WPT 16	R52402	50 (345)	51	115	500	51.2	Ti–Pd	Smls. & welded fittings
B/SB–363	WPT 16H	R52402	58 (400)	51	115	500	51.2	Ti–Pd	Smls. & welded fittings
B/SB–363	WPT 26	R52404	50 (345)	51	115	500	51.2	Ti–Ru	Smls. & welded fittings
B/SB–363	WPT 26H	R52404	58 (400)	51	115	500	51.2	Ti–Ru	Smls. & welded fittings
B/SB–363	WPT 12	R53400	70 (485)	52	115	500	52	Ti–0.3Mo–0.8Ni	Smls. & welded fittings
B/SB–363	WPT 38	R54250	130 (895)	54	115	500	53	Ti–4Al–2.5V–1.5Fe	Smls. & welded fittings
B/SB–363	WPT 9	R56320	90 (620)	53	115	500	53	Ti–3Al–2.5V	Smls. & welded fittings
B/SB–363	WPT 28	R56323	90 (620)	53	115	500	53	Ti–3Al–2.5V–0.1Ru	Smls. & welded fittings
B/SB–366	...	N02200	55 (380)	41	110	400	41	99.0Ni	Fittings
B/SB–366	...	N02201	50 (345)	41	110	400	41	99.0Ni–Low C	Fittings
B/SB–366	...	N04400	70 (485)	42	110	400	42	67Ni–30Cu	Fittings
B/SB–366	...	N06002	100 (690)	43	111	420	43	47Ni–22Cr–9Mo–18Fe	Fittings
B/SB–366	...	N06007	90 (620)	45	111	420	43	47Ni–22Cr–19Fe–6Mo	Fittings
B/SB–366	...	N06022	100 (690)	43	111	420	44	55Ni–21Cr–13.5Mo	Fittings
B/SB–366	...	N06025	98 (675)	43	111	420	43	63Ni–25Cr–10Fe–2Al–Ti–Y–Zr	Fittings

Copyrighted material licensed to Fermi National Laboratory by Clarivate Analytics (US) LLC, subscriptions.techstreet.com, downloaded on 2020-09-23 17:45:20 +0000 by Fermi National Laboratory User.
No further reproduction or distribution is permitted.

Table QW/QB-422
Ferrous and Nonferrous P-Numbers
Grouping of Base Metals for Qualification (Cont'd)

Spec. No.	Alloy, Type, or Grade	UNS No.	Minimum Specified Tensile, ksi (MPa)	Welding P-No.	Brazing P-No.	Brazing AWS B2.2 BM	ISO 15608 Group	Nominal Composition	Typical Product Form
					Nonferrous (Cont'd)				
B/SB–366	...	N06030	85 (585)	45	111	420	45	40Ni–29Cr–15Fe–5Mo	Fittings
B/SB–366	...	N06035	85 (585)	43	111	420	43	58Ni–33Cr–8Mo	Fittings
B/SB–366	...	N06045	90 (620)	46	111	420	45	46Ni–27Cr–23Fe–2.75Si	Fittings
B/SB–366	...	N06059	100 (690)	43	111	420	43	59Ni–23Cr–16Mo	Fittings
B/SB–366	...	N06200	100 (690)	43	111	420	43	59Ni–23Cr–16Mo–1.6Cu	Fittings
B/SB–366	...	N06210	100 (690)	43	111	420	43	60Ni–19Cr–19Mo–1.8Ta	Fittings
B/SB–366	...	N06230	110 (760)	43	111	420	43	53Ni–22Cr–14W–Co–Fe–Mo	Fittings
B/SB–366	...	N06455	100 (690)	43	111	420	43	61Ni–15Mo–16Cr	Fittings
B/SB–366	...	N06600	80 (550)	43	111	420	43	72Ni–15Cr–8Fe	Fittings
B/SB–366	...	N06625	100 (690)	43	111	430	43	60Ni–22Cr–9Mo–3.5Cb	Fittings
B/SB–366	...	N06985	90 (620)	45	111	420	45	47Ni–22Cr–20Fe–7Mo	Fittings
B/SB–366	...	N08020	80 (550)	45	111	420	45	35Ni–35Fe–20Cr–Cb	Fittings
B/SB–366	...	N08031	94 (650)	45	111	420	45	31Ni–31Fe–27Cr–7Mo	Fittings
B/SB–366	...	N08120	90 (620)	45	111	430	45	37Ni–33Fe–25Cr	Fittings
B/SB–366	...	N08330	70 (485)	46	111	420	45	35Ni–19Cr–1.25Si	Fittings
B/SB–366	...	N08367	95 (655)	45	111	420	8.2	46Fe–24Ni–21Cr–6Mo–N	Fittings > $^{3}/_{16}$ in. (5 mm)
B/SB–366	...	N08367	100 (690)	45	111	420	8.2	46Fe–24Ni–21Cr–6Mo–N	Fittings ≤ $^{3}/_{16}$ in. (5 mm)
B/SB–366	...	N08800	75 (515)	45	111	430	45	33Ni–42Fe–21Cr	Fittings
B/SB–366	...	N08825	85 (585)	45	111	430	45	42Ni–21.5Cr–3Mo–2.3Cu	Fittings
B/SB–366	...	N08925	87 (600)	45	111	420	8.2	25Ni–20Cr–6Mo–Cu–N	Fittings
B/SB–366	...	N08926	94 (650)	45	111	420	8.2	25Ni–20Cr–6Mo–Cu–N	Fittings
B/SB–366	...	N10001	100 (690)	44	112	410	44	62Ni–28Mo–5Fe	Fittings
B/SB–366	...	N10003	100 (690)	44	112	410	44	70Ni–16Mo–7Cr–5Fe	Fittings
B/SB–366	...	N10242	105 (725)	44	112	410	44	62Ni–25Mo–8Cr–2Fe	Fittings
B/SB–366	...	N10276	100 (690)	43	111	420	43	54Ni–16Mo–15Cr	Fittings
B/SB–366	...	N10362	105 (725)	43	111	420	43	62Ni–22Mo–15Cr	Fittings
B/SB–366	...	N10629	110 (760)	44	112	410	44	66Ni–28Mo–3Fe–1.3Cr–0.25Al	Fittings
B/SB–366	...	N10665	110 (760)	44	112	410	44	65Ni–28Mo–2Fe	Fittings
B/SB–366	...	N10675	110 (760)	44	112	410	44	65Ni–29.5Mo–2Fe–2Cr	Fittings
B/SB–366	...	N12160	90 (620)	46	...	420	46	37Ni–30Co–28Cr–2.7Si	Fittings
B/SB–366	...	R20033	109 (750)	45	111	420	45	33Cr–31Ni–32Fe–1.5Mo–0.6Cu–N	Fittings
B/SB–366	...	R30556	100 (690)	45	111	420	45	21Ni–30Fe–22Cr–18Co–3Mo–3W	Fittings
B/SB–367	C–2	R52550	50 (345)	51	115	500	51.4	Ti	Castings
B/SB–367	C–3	R52550	65 (450)	52	115	500	51.4	Ti	Castings
B/SB–369	...	C96200	45 (310)	34	107	500	34	87.5Cu–10Ni–Fe–Mn	Castings

Copyrighted material licensed to Fermi National Laboratory by Clarivate Analytics (US) LLC, subscriptions.techstreet.com, downloaded on 2020-09-23 17:45:20 +0000 by Fermi National Laboratory User.
No further reproduction or distribution is permitted.

Table QW/QB-422
Ferrous and Nonferrous P-Numbers
Grouping of Base Metals for Qualification (Cont'd)

Spec. No.	Alloy, Type, or Grade	UNS No.	Minimum Specified Tensile, ksi (MPa)	Welding P-No.	Brazing P-No.	Brazing AWS B2.2 BM	ISO 15608 Group	Nominal Composition	Typical Product Form
					Nonferrous (Cont'd)				
B/SB-381	F-1	R50250	35 (240)	51	115	500	51.1	Ti	Forgings
B/SB-381	F-2	R50400	50 (345)	51	115	500	51.2	Ti	Forgings
B/SB-381	F-2H	R50400	58 (400)	51	115	500	51.2	Ti	Forgings
B/SB-381	F-3	R50550	65 (450)	52	115	500	51.3	Ti	Forgings
B/SB-381	F-7	R52400	50 (345)	51	115	500	52	Ti-Pd	Forgings
B/SB-381	F-7H	R52400	58 (400)	51	115	500	52	Ti-Pd	Forgings
B/SB-381	F-16	R52402	50 (345)	51	115	500	51.2	Ti-Pd	Forgings
B/SB-381	F-16H	R52402	58 (400)	51	115	500	51.2	Ti-Pd	Forgings
B/SB-381	F-26	R52404	50 (345)	51	115	500	51.2	Ti-Ru	Forgings
B/SB-381	F-26H	R52404	58 (400)	51	115	500	51.2	Ti-Ru	Forgings
B/SB-381	F-12	R53400	70 (485)	52	115	500	52	Ti-0.3Mo-0.8Ni	Forgings
B/SB-381	F-38	R54250	130 (895)	54	115	500	53	Ti-4Al-2.5V-1.5Fe	Forgings
B/SB-381	F-9	R56320	90 (620)	53	115	500	53	Ti-3Al-2.5V	Forgings
B/SB-381	F-28	R56323	90 (620)	53	115	500	53	Ti-3Al-2.5V-0.1Ru	Forgings
B/SB-395	...	C10200	30 (205)	31	107	300	31	99.95Cu-P	Smls. tube
B/SB-395	...	C12000	30 (205)	31	107	300	31	99.9Cu-P	Smls. tube
B/SB-395	...	C12200	30 (205)	31	107	300	31	99.9Cu-P	Smls. tube
B/SB-395	...	C14200	30 (205)	31	107	300	31	99.4Cu-As-P	Smls. tube
B/SB-395	...	C19200	38 (260)	31	107	300	31	99.7Cu-Fe-P	Smls. tube
B/SB-395	...	C23000	40 (275)	32	107	300	32.1	85Cu-15Zn	Smls. tube
B/SB-395	...	C44300	45 (310)	32	107	300	32.2	71Cu-28Zn-1Sn-0.06As	Smls. tube
B/SB-395	...	C44400	45 (310)	32	107	300	32.2	71Cu-28Zn-1Sn-0.06Sb	Smls. tube
B/SB-395	...	C44500	45 (310)	32	107	300	32.2	71Cu-28Zn-1Sn-0.06P	Smls. tube
B/SB-395	...	C60800	50 (345)	35	108	360	35	95Cu-5Al	Smls. tube
B/SB-395	...	C68700	50 (345)	32	108	350	32.2	78Cu-20Zn-2Al	Smls. tube
B/SB-395	...	C70600	40 (275)	34	107	300	34	90Cu-10Ni	Smls. tube
B/SB-395	...	C70620	40 (275)	34	107	300	34	90Cu-10Ni	Smls. tube
B/SB-395	...	C71000	45 (310)	34	107	300	34	80Cu-20Ni	Smls. tube
B/SB-395	...	C71500	52 (360)	34	107	300	34	70Cu-30Ni	Smls. tube
B/SB-395	...	C71520	52 (360)	34	107	300	34	70Cu-30Ni	Smls. tube
B/SB-407	...	N08120	90 (620)	45	111	430	45	37Ni-33Fe-25Cr	Smls. pipe & tube
B/SB-407	...	N08800	75 (515)	45	111	430	45	33Ni-42Fe-21Cr	Smls. pipe & tube
B/SB-407	...	N08801	65 (450)	45	111	430	45	32Ni-45Fe-20.5Cr-Ti	Smls. pipe & tube
B/SB-407	...	N08810	65 (450)	45	111	430	45	33Ni-42Fe-21Cr	Smls. pipe & tube
B/SB-407	...	N08811	65 (450)	45	111	430	45	33Ni-42Fe-21Cr-Al-Ti	Smls. pipe & tube

Copyrighted material licensed to Fermi National Laboratory by Clarivate Analytics (US) LLC, subscriptions.techstreet.com, downloaded on 2020-09-23 17:45:20 +0000 by Fermi National Laboratory User.
No further reproduction or distribution is permitted.

Table QW/QB-422
Ferrous and Nonferrous P-Numbers
Grouping of Base Metals for Qualification (Cont'd)

Spec. No.	Alloy, Type, or Grade	UNS No.	Minimum Specified Tensile, ksi (MPa)	Welding P-No.	Brazing P-No.	Brazing AWS B2.2 BM	ISO 15608 Group	Nominal Composition	Typical Product Form
					Nonferrous (Cont'd)				
B/SB–408	...	N08120	90 (620)	45	111	430	45	37Ni–33Fe–25Cr	Rod & bar
B/SB–408	...	N08800	75 (515)	45	111	430	45	33Ni–42Fe–21Cr	Rod & bar
B/SB–408	...	N08810	65 (450)	45	111	430	45	33Ni–42Fe–21Cr	Rod & bar
B/SB–408	...	N08811	65 (450)	45	111	430	45	33Ni–42Fe–21Cr–Al–Ti	Rod & bar
B/SB–409	...	N08120	90 (620)	45	111	430	45	37Ni–33Fe–25Cr	Plate, sheet & strip
B/SB–409	...	N08800	75 (515)	45	111	430	45	33Ni–42Fe–21Cr	Plate, sheet & strip
B/SB–409	...	N08810	65 (450)	45	111	430	45	33Ni–42Fe–21Cr	Plate, sheet & strip
B/SB–409	...	N08811	65 (450)	45	111	430	45	33Ni–42Fe–21Cr–Al–Ti	Plate, sheet & strip
B/SB–423	...	N08825	75 (515)	45	111	430	45	42Ni–21.5Cr–3Mo–2.3Cu	Smls. pipe & tube
B/SB–424	...	N08825	85 (585)	45	111	430	45	42Ni–21.5Cr–3Mo–2.3Cu	Plate, sheet & strip
B/SB–425	...	N08825	85 (585)	45	111	430	45	42Ni–21.5Cr–3Mo–2.3Cu	Rod & bar
B/SB–434	...	N10003	100 (690)	44	112	430	44	70Ni–16Mo–7Cr–5Fe	Plate, sheet & strip
B/SB–434	...	N10242	105 (725)	44	112	410	44	62Ni–25Mo–8Cr–2Fe	Plate, sheet & strip
B/SB–435	...	N06002	95 (655)	43	111	420	43	47Ni–22Cr–9Mo–18Fe	Plate, sheet & strip
B/SB–435	...	N06230	110 (760)	43	111	420	43	53Ni–22Cr–14W–Co–Fe–Mo	Plate, sheet & strip
B/SB–435	...	N12160	90 (620)	46	...	420	46	37Ni–30Co–28Cr–2.7Si	Plate, sheet & strip
B/SB–435	...	R30556	100 (690)	45	111	420	45	21Ni–30Fe–22Cr–18Co–3Mo–3W	Plate, sheet & strip
B/SB–443	1	N06625	110 (760)	43	111	430	43	60Ni–22Cr–9Mo–3.5Cb	Plate & hot-rolled sheet
B/SB–443	1	N06625	120 (825)	43	111	430	43	60Ni–22Cr–9Mo–3.5Cb	Cold-rolled sheet & strip
B/SB–443	2	N06625	100 (690)	43	111	430	43	60Ni–22Cr–9Mo–3.5Cb	Plate, sheet & strip
B/SB–444	1	N06625	120 (825)	43	111	430	43	60Ni–22Cr–9Mo–3.5Cb	Smls. pipe & tube
B/SB–444	2	N06625	100 (690)	43	111	430	43	60Ni–22Cr–9Mo–3.5Cb	Smls. pipe & tube
B/SB–446	1	N06625	100 (690)	43	111	430	43	60Ni–22Cr–9Mo–3.5Cb	Rod & bar 4 in.–10 in. (100 mm–250 mm) dia.
B/SB–446	1	N06625	120 (825)	43	111	430	43	60Ni–22Cr–9Mo–3.5Cb	Rod & bar < 4 in. (100 mm) dia.
B/SB–446	2	N06625	100 (690)	43	111	430	43	60Ni–22Cr–9Mo–3.5Cb	Rod & bar
B/SB–462	...	N06022	100 (690)	43	111	420	44	55Ni–21Cr–13.5Mo	Forgings
B/SB–462	...	N06030	85 (585)	45	111	420	45	40Ni–29Cr–15Fe–5Mo	Forgings
B/SB–462	...	N06035	85 (585)	43	111	420	43	58Ni–33Cr–8Mo	Forgings
B/SB–462	...	N06045	90 (620)	46	111	420	45	46Ni–27Cr–23Fe–2.75Si	Forgings
B/SB–462	...	N06059	100 (690)	43	111	420	43	59Ni–23Cr–16Mo	Forgings

Copyrighted material licensed to Fermi National Laboratory by Clarivate Analytics (US) LLC, subscriptions.techstreet.com, downloaded on 2020-09-23 17:45:20 +0000 by Fermi National Laboratory User.
No further reproduction or distribution is permitted.

Table QW/QB-422
Ferrous and Nonferrous P-Numbers
Grouping of Base Metals for Qualification (Cont'd)

Spec. No.	Alloy, Type, or Grade	UNS No.	Minimum Specified Tensile, ksi (MPa)	Welding P-No.	Brazing P-No.	Brazing AWS B2.2 BM	ISO 15608 Group	Nominal Composition	Typical Product Form
					Nonferrous (Cont'd)				
B/SB–462	...	N06200	100 (690)	43	111	420	43	59Ni–23Cr–16Mo–1.6Cu	Forgings
B/SB–462	...	N06686	100 (690)	43	111	430	43	58Ni–21Cr–16Mo–3.5N	Forgings
B/SB–462	...	N08020	80 (550)	45	111	420	45	35Ni–35Fe–20Cr–Cb	Forgings
B/SB–462	...	N08031	94 (650)	45	111	420	45	31Ni–33Fe–22Cr–6.5Mo–Cu–N	Forgings
B/SB–462	...	N08367	95 (655)	45	111	420	8.2	46Fe–24Ni–21Cr–6Mo–N	Forgings
B/SB–462	...	N10276	100 (690)	43	111	420	43	54Ni–16Mo–15Cr	Forgings
B/SB–462	...	N10362	105 (725)	43	111	420	43	62Ni–22Mo–15Cr	Forgings
B/SB–462	...	N10629	110 (760)	44	112	410	44	66Ni–28Mo–3Fe–1.3Cr–0.25Al	Forgings
B/SB–462	...	N10665	110 (760)	44	112	410	44	65Ni–28Mo–2Fe	Forgings
B/SB–462	...	N10675	110 (760)	44	112	410	44	65Ni–29.5Mo–2Fe–2Cr	Forgings
B/SB–462	...	R20033	109 (750)	45	111	420	45	33Cr–31Ni–32Fe–1.5Mo–0.6Cu–N	Forgings
B/SB–463	...	N08020	80 (550)	45	111	420	45	35Ni–35Fe–20Cr–Cb	Plate, sheet & strip
B/SB–463	...	N08024	80 (550)	45	111	420	45	37Ni–33Fe–23Cr–4Mo	Plate, sheet & strip
B/SB–463	...	N08026	80 (550)	45	111	420	45	35Ni–30Fe–24Cr–6Mo–3Cu	Plate, sheet & strip
B/SB–464	...	N08020	80 (550)	45	111	420	45	35Ni–35Fe–20Cr–Cb	Welded pipe
B/SB–464	...	N08024	80 (550)	45	111	420	45	37Ni–33Fe–23Cr–4Mo	Welded pipe
B/SB–464	...	N08026	80 (550)	45	111	420	45	35Ni–30Fe–24Cr–6Mo–3Cu	Welded pipe
B/SB–466	...	C70600	38 (260)	34	107	300	34	90Cu–10Ni	Smls. pipe & tube
B/SB–466	...	C70620	38 (260)	34	107	300	34	90Cu–10Ni	Smls. pipe & tube
B/SB–466	...	C71000	45 (310)	34	107	300	34	80Cu–20Ni	Smls. pipe & tube
B/SB–466	...	C71500	52 (360)	34	107	300	34	70Cu–30Ni	Smls. pipe & tube
B/SB–466	...	C71520	52 (360)	34	107	300	34	70Cu–30Ni	Smls. pipe & tube
B/SB–467	...	C70600	38 (260)	34	107	300	34	90Cu–10Ni	Welded pipe > 4.5 in. (114 mm) O.D.
B/SB–467	...	C70600	40 (275)	34	107	300	34	90Cu–10Ni	Welded pipe ≤ 4.5 in. (114 mm) O.D.
B/SB–467	...	C70620	38 (260)	34	107	300	34	90Cu–10Ni	Welded pipe > 4.5 in. (114 mm) O.D.
B/SB–467	...	C70620	40 (275)	34	107	300	34	90Cu–10Ni	Welded pipe ≤ 4.5 in. (114 mm) O.D.
B/SB–467	...	C71500	45 (310)	34	107	300	34	70Cu–30Ni	Welded pipe > 4.5 in. (114 mm) O.D.
B/SB–467	...	C71500	50 (345)	34	107	300	34	70Cu–30Ni	Welded pipe ≤ 4.5 in. (114 mm) O.D.
B/SB–467	...	C71520	45 (310)	34	107	300	34	70Cu–30Ni	Welded pipe > 4.5 in. (114 mm) O.D.
B/SB–467	...	C71520	50 (345)	34	107	300	34	70Cu–30Ni	Welded pipe ≤ 4.5 in. (114 mm) O.D.
B/SB–468	...	N08020	80 (550)	45	111	420	45	35Ni–35Fe–20Cr–Cb	Welded tube
B/SB–468	...	N08024	80 (550)	45	111	420	45	37Ni–33Fe–23Cr–4Mo	Welded tube
B/SB–468	...	N08026	80 (550)	45	111	420	45	35Ni–30Fe–24Cr–6Mo–3Cu	Welded tube

Copyrighted material licensed to Fermi National Laboratory by Clarivate Analytics (US) LLC, subscriptions.techstreet.com, downloaded on 2020-09-23 17:45:20 +0000 by Fermi National Laboratory User.
No further reproduction or distribution is permitted.

Table QW/QB-422
Ferrous and Nonferrous P-Numbers
Grouping of Base Metals for Qualification (Cont'd)

Spec. No.	Alloy, Type, or Grade	UNS No.	Minimum Specified Tensile, ksi (MPa)	Welding P-No.	Brazing P-No.	Brazing AWS B2.2 BM	ISO 15608 Group	Nominal Composition	Typical Product Form
					Nonferrous (Cont'd)				
B/SB–473	...	N08020	80 (550)	45	111	420	45	35Ni–35Fe–20Cr–Cb	Bar
B491	3003	A93003	14 (97)	21	104	200	22.1	Al–Mn–Cu	Extruded tube
B/SB–493	R60702	R60702	55 (380)	61	117	600	61	99.2Zr	Forgings
B/SB–493	R60705	R60705	70 (485)	62	117	600	62	95.5Zr+2.5Cb	Forgings
B/SB–505	...	C95200	68 (470)	35	108	360	35	88Cu–9Al–3Fe	Castings
B/SB–511	...	N08330	70 (485)	46	111	420	45	35Ni–19Cr–1.25Si	Bars & shapes
B/SB–514	...	N08120	90 (620)	45	111	430	45	37Ni–33Fe–25Cr	Welded pipe
B/SB–514	...	N08800	75 (515)	45	111	430	45	33Ni–42Fe–21Cr	Welded pipe
B/SB–514	...	N08810	65 (450)	45	111	430	45	33Ni–42Fe–21Cr	Welded pipe
B/SB–515	...	N08120	90 (620)	45	111	430	45	37Ni–33Fe–25Cr	Welded tube
B/SB–515	...	N08800	75 (515)	45	111	430	45	33Ni–42Fe–21Cr	Welded tube
B/SB–515	...	N08810	65 (450)	45	111	430	45	33Ni–42Fe–21Cr	Welded tube
B/SB–515	...	N08811	65 (450)	45	111	430	45	33Ni–42Fe–21Cr–Al–Ti	Welded tube
B/SB–516	...	N06025	98 (675)	43	111	420	43	63Ni–25Cr–10Fe–2Al–Ti–Y–Zr	Welded tube
B/SB–516	...	N06045	90 (620)	46	111	420	45	46Ni–27Cr–23Fe–2.75Si	Welded tube
B/SB–516	...	N06600	80 (550)	43	111	420	43	72Ni–15Cr–8Fe	Welded tube
B/SB–517	...	N06025	98 (675)	43	111	420	43	63Ni–25Cr–10Fe–2Al–Ti–Y–Zr	Welded pipe
B/SB–517	...	N06045	90 (620)	46	111	420	45	46Ni–27Cr–23Fe–2.75Si	Welded pipe
B/SB–517	...	N06600	80 (550)	43	111	420	43	72Ni–15Cr–8Fe	Welded pipe
B/SB–523	R60702	R60702	55 (380)	61	117	600	61	99.2Zr	Smls. & welded tube
B/SB–523	R60705	R60705	80 (550)	62	117	600	62	95.5Zr+2.5Cb	Smls. & welded tube
B/SB–535	...	N08330	70 (485)	46	111	420	45	35Ni–19Cr–1.25Si	Smls. pipe & tube
B/SB–536	...	N08330	70 (485)	46	111	420	45	35Ni–19Cr–1.25Si	Plate, sheet & strip
B/SB–543	...	C12200	30 (205)	31	107	300	31	99.9Cu–P	Welded tube
B/SB–543	...	C19400	45 (310)	31	107	300	31	97.5Cu–P	Welded tube
B/SB–543	...	C23000	40 (275)	32	107	300	32.1	85Cu–15Zn	Welded tube
B/SB–543	...	C44300	45 (310)	32	107	300	32.2	71Cu–28Zn–1Sn–0.06As	Welded tube
B/SB–543	...	C44400	45 (310)	32	107	300	32.2	71Cu–28Zn–1Sn–0.06Sb	Welded tube
B/SB–543	...	C44500	45 (310)	32	107	300	32.2	71Cu–28Zn–1Sn–0.06P	Welded tube

Copyrighted material licensed to Fermi National Laboratory by Clarivate Analytics (US) LLC, subscriptions.techstreet.com, downloaded on 2020-09-23 17:45:20 +0000 by Fermi National Laboratory User.
No further reproduction or distribution is permitted.

Table QW/QB-422
Ferrous and Nonferrous P-Numbers
Grouping of Base Metals for Qualification (Cont'd)

Spec. No.	Alloy, Type, or Grade	UNS No.	Minimum Specified Tensile, ksi (MPa)	Welding P-No.	Brazing P-No.	Brazing AWS B2.2 BM	ISO 15608 Group	Nominal Composition	Typical Product Form
					Nonferrous (Cont'd)				
B/SB–543	...	C68700	50 (345)	32	108	350	32.2	78Cu–20Zn–2Al	Welded tube
B/SB–543	...	C70400	38 (260)	34	107	300	34	95Cu–5Ni	Welded tube
B/SB–543	...	C70600	40 (275)	34	107	300	34	90Cu–10Ni	Welded tube
B/SB–543	...	C70620	40 (275)	34	107	300	34	90Cu–10Ni	Welded tube
B/SB–543	...	C71500	52 (360)	34	107	300	34	70Cu–30Ni	Welded tube
B/SB–543	...	C71520	52 (360)	34	107	300	34	70Cu–30Ni	Welded tube
B547	Alclad 3003	A83003	13 (90)	21	104	200	...	Al–Mn–Cu	Welded tube
B547	3003	A93003	14 (97)	21	104	200	22.1	Al–Mn–Cu	Welded tube
B547	5083	A95083	40 (275)	25	105	220	22.4	Al–4.4Mg–Mn	Welded tube
B547	5454	A95454	31 (215)	22	105	220	22.3	Al–2.7Mg–Mn	Welded tube
B547	6061	A96061	24 (165)	23	105	220	23.1	Al–Mg–Si–Cu	Welded tube
B/SB–550	R60702	R60702	55 (380)	61	117	600	61	99.2Zr	Bar & wire
B/SB–550	R60705	R60705	80 (550)	62	117	600	62	95.5Zr+2.5Cb	Bar & wire
B/SB–551	R60702	R60702	55 (380)	61	117	600	61	99.2Zr	Plate, sheet & strip
B/SB–551	R60705	R60705	80 (550)	62	117	600	62	95.5Zr+2.5Cb	Plate, sheet & strip
B/SB–564	...	N04400	70 (485)	42	110	400	42	67Ni–30Cu	Forgings
B/SB–564	...	N06022	100 (690)	43	111	420	44	55Ni–21Cr–13.5Mo	Forgings
B/SB–564	...	N06025	84 (580)	43	111	420	43	63Ni–25Cr–10Fe–2Al–Ti–Y–Zr	Forgings > 4 in.–12 in. (100 mm–300 mm)
B/SB–564	...	N06025	98 (675)	43	111	420	43	63Ni–25Cr–10Fe–2Al–Ti–Y–Zr	Forgings ≤ 4 in. (100 mm)
B/SB–564	...	N06035	85 (585)	43	111	420	43	58Ni–33Cr–8Mo	Forgings
B/SB–564	...	N06045	90 (620)	46	111	420	45	46Ni–27Cr–23Fe–2.75Si	Forgings
B/SB–564	...	N06059	100 (690)	43	111	420	43	59Ni–23Cr–16Mo	Forgings
B/SB–564	...	N06200	100 (690)	43	111	420	43	59Ni–23Cr–16Mo–1.6Cu	Forgings
B/SB–564	...	N06210	100 (690)	43	111	420	43	60Ni–19Cr–19Mo–1.8Ta	Forgings
B/SB–564	...	N06230	110 (760)	43	111	420	43	53Ni–22Cr–14W–Co–Fe–Mo	Forgings
B/SB–564	...	N06600	80 (550)	43	111	420	43	72Ni–15Cr–8Fe	Forgings
B/SB–564	...	N06617	95 (655)	43	111	420	46	52Ni–22Cr–13Co–9Mo	Forgings
B/SB–564	...	N06625	110 (760)	43	111	430	43	60Ni–22Cr–9Mo–3.5Cb	Forgings > 4 in.–10 in. (102 mm–254 mm), incl.
B/SB–564	...	N06625	120 (825)	43	111	430	43	60Ni–22Cr–9Mo–3.5Cb	Forgings ≤ 4 in. (102 mm)
B/SB–564	...	N06686	100 (690)	43	111	430	43	58Ni–21Cr–16Mo–3.5W	Forgings
B/SB–564	...	N06690	85 (585)	43	111	420	43	58Ni–29Cr–9Fe	Forgings
B/SB–564	...	N08031	94 (650)	45	111	420	45	31Ni–31Fe–27Cr–7Mo	Forgings
B/SB–564	...	N08120	90 (620)	45	111	430	45	37Ni–33Fe–25Cr	Forgings
B/SB–564	...	N08367	95 (655)	45	111	420	8.2	46Fe–24Ni–21Cr–6Mo–N	Forgings

Copyrighted material licensed to Fermi National Laboratory by Clarivate Analytics (US) LLC, subscriptions.techstreet.com, downloaded on 2020-09-23 17:45:20 +0000 by Fermi National Laboratory User.
No further reproduction or distribution is permitted.

Table QW/QB-422
Ferrous and Nonferrous P-Numbers
Grouping of Base Metals for Qualification (Cont'd)

Spec. No.	Alloy, Type, or Grade	UNS No.	Minimum Specified Tensile, ksi (MPa)	Welding P-No.	Brazing P-No.	Brazing AWS B2.2 BM	ISO 15608 Group	Nominal Composition	Typical Product Form
					Nonferrous (Cont'd)				
B/SB–564	...	N08800	75 (515)	45	111	430	45	33Ni–42Fe–21Cr	Forgings
B/SB–564	...	N08810	65 (450)	45	111	430	45	33Ni–42Fe–21Cr	Forgings
B/SB–564	...	N08811	65 (450)	45	111	430	44	33Ni–42Fe–21Cr–Al–Ti	Forgings
B/SB–564	...	N08825	85 (585)	45	111	430	45	42Ni–21.5Cr–3Mo–2.3Cu	Forgings
B/SB–564	...	N10242	105 (725)	44	112	410	44	62Ni–25Mo–8Cr–2Fe	Forgings
B/SB–564	...	N10276	100 (690)	43	111	420	43	54Ni–16Mo–15Cr	Forgings
B/SB–564	...	N10362	105 (725)	43	111	420	43	62Ni–22Mo–15Cr	Forgings
B/SB–564	...	N10629	110 (760)	44	112	410	44	66Ni–28Mo–3Fe–1.3Cr–0.25Al	Forgings
B/SB–564	...	N10665	110 (760)	44	112	410	44	65Ni–28Mo–2Fe	Forgings
B/SB–564	...	N10675	110 (760)	44	112	410	44	65Ni–29.5Mo–2Fe–2Cr	Forgings
B/SB–564	...	N12160	90 (620)	46	...	420	46	37Ni–30Co–28Cr–2.7Si	Forgings
B/SB–564	...	R20033	109 (750)	45	111	420	45	33Cr–31Ni–32Fe–1.5Mo–0.6Cu–N	Forgings
B/SB–572	...	N06002	95 (655)	43	111	420	43	47Ni–22Cr–9Mo–18Fe	Rod
B/SB–572	...	N06230	110 (760)	43	111	420	43	53Ni–22Cr–14W–Co–Fe–Mo	Rod
B/SB–572	...	N12160	90 (620)	46	...	420	46	37Ni–30Co–28Cr–2.7Si	Rod
B/SB–572	...	R30556	100 (690)	45	111	420	45	21Ni–30Fe–22Cr–18Co–3Mo–3W	Rod
B/SB–573	...	N10003	100 (690)	44	112	430	44	70Ni–16Mo–7Cr–5Fe	Rod
B/SB–573	...	N10242	105 (725)	44	112	410	44	62Ni–25Mo–8Cr–2Fe	Rod
B/SB–574	...	N06022	100 (690)	43	111	420	43	55Ni–21Cr–13.5Mo	Rod
B/SB–574	...	N06035	85 (585)	43	111	420	43	58Ni–33Cr–8Mo	Rod
B/SB–574	...	N06059	100 (690)	43	111	420	43	59Ni–23Cr–16Mo	Rod
B/SB–574	...	N06200	100 (690)	43	111	420	43	59Ni–23Cr–16Mo–1.6Cu	Rod
B/SB–574	...	N06210	100 (690)	43	111	420	43	60Ni–19Cr–19Mo–1.8Ta	Rod
B/SB–574	...	N06455	100 (690)	43	111	420	43	61Ni–16Mo–16Cr	Rod
B/SB–574	...	N06686	100 (690)	43	111	430	43	58Ni–21Cr–16Mo–3.5W	Rod
B/SB–574	...	N10276	100 (690)	43	111	420	43	54Ni–16Mo–15Cr	Rod
B/SB–574	...	N10362	105 (725)	43	111	420	43	62Ni–22Mo–15Cr	Rod
B/SB–575	...	N06022	100 (690)	43	111	420	43	55Ni–21Cr–13.5Mo	Plate, sheet & strip
B/SB–575	...	N06035	85 (585)	43	111	420	43	58Ni–33Cr–8Mo	Plate, sheet & strip
B/SB–575	...	N06059	100 (690)	43	111	420	43	59Ni–23Cr–16Mo	Plate, sheet & strip
B/SB–575	...	N06200	100 (690)	43	111	420	43	59Ni–23Cr–16Mo–1.6Cu	Plate, sheet & strip
B/SB–575	...	N06210	100 (690)	43	111	420	43	60Ni–19Cr–19Mo–1.8Ta	Plate, sheet & strip
B/SB–575	...	N06455	100 (690)	43	111	420	43	61Ni–16Mo–16Cr	Plate, sheet & strip
B/SB–575	...	N06686	100 (690)	43	111	430	43	58Ni–21Cr–16Mo–3.5W	Plate, sheet & strip

Copyrighted material licensed to Fermi National Laboratory by Clarivate Analytics (US) LLC, subscriptions.techstreet.com, downloaded on 2020-09-23 17:45:20 +0000 by Fermi National Laboratory User.
No further reproduction or distribution is permitted.

Table QW/QB-422
Ferrous and Nonferrous P-Numbers
Grouping of Base Metals for Qualification (Cont'd)

Spec. No.	Alloy, Type, or Grade	UNS No.	Minimum Specified Tensile, ksi (MPa)	Welding P-No.	Brazing P-No.	Brazing AWS B2.2 BM	ISO 15608 Group	Nominal Composition	Typical Product Form
					Nonferrous (Cont'd)				
B/SB–575	...	N10276	100 (690)	43	111	420	43	54Ni–16Mo–15Cr	Plate, sheet & strip
B/SB–575	...	N10362	105 (725)	43	111	420	43	62Ni–22Mo–15Cr	Plate, sheet & strip
B/SB–581	...	N06007	85 (585)	45	111	420	43	47Ni–22Cr–19Fe–6Mo	Rod > 0.75 in.–3.5 in. (19 mm–89 mm), incl.
B/SB–581	...	N06007	90 (620)	45	111	420	43	47Ni–22Cr–19Fe–6Mo	Rod 0.3125 in.–0.75 in. (8 mm–19 mm), incl.
B/SB–581	...	N06030	85 (585)	45	111	420	45	40Ni–29Cr–15Fe–5Mo	Rod
B/SB–581	...	N06975	85 (585)	45	111	430	45	49Ni–25Cr–18Fe–6Mo	Rod
B/SB–581	...	N06985	85 (585)	45	111	420	45	47Ni–22Cr–20Fe–7Mo	Rod > 0.75 in.–3.5 in. (19 mm–89 mm), incl.
B/SB–581	...	N06985	90 (620)	45	111	420	45	47Ni–22Cr–20Fe–7Mo	Rod 0.3125 in.–0.75 in. (8 mm–19 mm), incl.
B/SB–581	...	N08031	94 (650)	45	111	420	45	31Ni–31Fe–27Cr–7Mo	Rod
B/SB–582	...	N06007	85 (585)	45	111	420	43	47Ni–22Cr–19Fe–6Mo	Plate, sheet & strip > 0.75 in.–2.5 in. (19 mm–64 mm), incl.
B/SB–582	...	N06007	90 (620)	45	111	420	43	47Ni–22Cr–19Fe–6Mo	Plate, sheet & strip ≤ 0.75 in. (19 mm)
B/SB–582	...	N06030	85 (585)	45	111	420	45	40Ni–29Cr–15Fe–5Mo	Plate, sheet & strip
B/SB–582	...	N06975	85 (585)	45	111	430	45	49Ni–25Cr–18Fe–6Mo	Plate, sheet & strip
B/SB–582	...	N06985	85 (585)	45	111	420	45	47Ni–22Cr–20Fe–7Mo	Plate, sheet & strip > 0.75 in.–2.5 in. (19 mm–64 mm), incl.
B/SB–582	...	N06985	90 (620)	45	111	420	45	47Ni–22Cr–20Fe–7Mo	Plate, sheet & strip ≤ 0.75 in. (19 mm)
B/SB–599	...	N08700	80 (550)	45	111	420	8.2	25Ni–47Fe–21Cr–5Mo	Plate, sheet & strip
B/SB–619	...	N06002	100 (690)	43	111	420	43	47Ni–22Cr–9Mo–18Fe	Welded pipe
B/SB–619	...	N06007	90 (620)	45	111	420	43	47Ni–22Cr–19Fe–6Mo	Welded pipe
B/SB–619	...	N06022	100 (690)	43	111	420	44	55Ni–21Cr–13.5Mo	Welded pipe
B/SB–619	...	N06030	85 (585)	45	111	420	45	40Ni–29Cr–15Fe–5Mo	Welded pipe
B/SB–619	...	N06035	85 (585)	43	111	420	43	58Ni–33Cr–8Mo	Welded pipe
B/SB–619	...	N06059	100 (690)	43	111	420	43	59Ni–23Cr–16Mo	Welded pipe
B/SB–619	...	N06200	100 (690)	43	111	420	43	59Ni–23Cr–16Mo–1.6Cu	Welded pipe
B/SB–619	...	N06210	100 (690)	43	111	420	43	60Ni–19Cr–19Mo–1.8Ta	Welded pipe
B/SB–619	...	N06230	110 (760)	43	111	420	43	53Ni–22Cr–14W–Co–Fe–Mo	Welded pipe
B/SB–619	...	N06455	100 (690)	43	111	420	43	61Ni–16Mo–16Cr	Welded pipe
B/SB–619	...	N06686	100 (690)	43	111	430	43	58Ni–21Cr–16Mo–3.5W	Welded pipe
B/SB–619	...	N06975	85 (585)	45	111	430	45	49Ni–25Cr–18Fe–6Mo	Welded pipe
B/SB–619	...	N06985	90 (620)	45	111	420	45	47Ni–22Cr–20Fe–7Mo	Welded pipe
B/SB–619	...	N08031	94 (650)	45	111	420	45	31Ni–31Fe–27Cr–7Mo	Welded pipe
B/SB–619	...	N08320	75 (515)	45	111	430	8.2	26Ni–22Cr–5Mo–Ti	Welded pipe
B/SB–619	...	N10001	100 (690)	44	112	410	44	62Ni–28Mo–5Fe	Welded pipe

Copyrighted material licensed to Fermi National Laboratory by Clarivate Analytics (US) LLC, subscriptions.techstreet.com, downloaded on 2020-09-23 17:45:20 +0000 by Fermi National Laboratory User.
No further reproduction or distribution is permitted.

Table QW/QB-422
Ferrous and Nonferrous P-Numbers
Grouping of Base Metals for Qualification (Cont'd)

Spec. No.	Alloy, Type, or Grade	UNS No.	Minimum Specified Tensile, ksi (MPa)	Welding P-No.	Brazing P-No.	Brazing AWS B2.2 BM	ISO 15608 Group	Nominal Composition	Typical Product Form
					Nonferrous (Cont'd)				
B/SB–619	...	N10242	105 (725)	44	112	410	44	62Ni–25Mo–8Cr–2Fe	Welded pipe
B/SB–619	...	N10276	100 (690)	43	111	420	43	54Ni–16Mo–15Cr	Welded pipe
B/SB–619	...	N10362	105 (725)	43	111	420	43	62Ni–22Mo–15Cr	Welded pipe
B/SB–619	...	N10629	110 (760)	44	112	410	44	66Ni–28Mo–3Fe–1.3Cr–0.25Al	Welded pipe
B/SB–619	...	N10665	110 (760)	44	112	410	44	65Ni–28Mo–2Fe	Welded pipe
B/SB–619	...	N10675	110 (760)	44	112	410	44	65Ni–29.5Mo–2Fe–2Cr	Welded pipe
B/SB–619	...	N12160	90 (620)	46	...	420	46	37Ni–30Co–28Cr–2.7Si	Welded pipe
B/SB–619	...	R20033	109 (750)	45	111	420	45	33Cr–31Ni–32Fe–1.5Mo–0.6Cu–N	Welded pipe
B/SB–619	...	R30556	100 (690)	45	111	420	45	21Ni–30Fe–22Cr–18Co–3Mo–3W	Welded pipe
B/SB–620	...	N08320	75 (515)	45	111	430	8.2	26Ni–22Cr–5Mo–Ti	Plate, sheet & strip
B/SB–621	...	N08320	75 (515)	45	111	420	8.2	26Ni–22Cr–5Mo–Ti	Rod
B/SB–622	...	N06002	100 (690)	43	111	420	43	47Ni–22Cr–9Mo–18Fe	Smls. pipe & tube
B/SB–622	...	N06007	90 (620)	45	111	420	43	47Ni–22Cr–19Fe–6Mo	Smls. pipe & tube
B/SB–622	...	N06022	100 (690)	43	111	420	44	55Ni–21Cr–13.5Mo	Smls. pipe & tube
B/SB–622	...	N06030	85 (585)	45	111	420	45	40Ni–29Cr–15Fe–5Mo	Smls. pipe & tube
B/SB–622	...	N06035	85 (585)	43	111	420	43	58Ni–33Cr–8Mo	Smls. pipe & tube
B/SB–622	...	N06059	100 (690)	43	111	420	43	59Ni–23Cr–16Mo	Smls. pipe & tube
B/SB–622	...	N06200	100 (690)	43	111	420	43	59Ni–23Cr–16Mo–1.6Cu	Smls. pipe & tube
B/SB–622	...	N06210	100 (690)	43	111	420	43	60Ni–19Cr–19Mo–1.8Ta	Smls. pipe & tube
B/SB–622	...	N06230	110 (760)	43	111	420	43	53Ni–22Cr–14W–Co–Fe–Mo	Smls. pipe & tube
B/SB–622	...	N06455	100 (690)	43	111	420	43	61Ni–16Mo–16Cr	Smls. pipe & tube
B/SB–622	...	N06686	100 (690)	43	111	430	43	58Ni–21Cr–16Mo–3.5W	Smls. pipe & tube
B/SB–622	...	N06975	85 (585)	45	111	430	45	49Ni–25Cr–18Fe–6Mo	Smls. pipe & tube
B/SB–622	...	N06985	90 (620)	45	111	420	45	47Ni–22Cr–20Fe–7Mo	Smls. pipe & tube
B/SB–622	...	N08031	94 (650)	45	111	420	45	31Ni–31Fe–27Cr–7Mo	Smls. pipe & tube
B/SB–622	...	N08320	75 (515)	45	111	430	8.2	26Ni–22Cr–5Mo–Ti	Smls. pipe & tube
B/SB–622	...	N10001	100 (690)	44	112	410	44	62Ni–28Mo–5Fe	Smls. pipe & tube
B/SB–622	...	N10242	105 (725)	44	112	410	44	62Ni–25Mo–8Cr–2Fe	Smls. pipe & tube
B/SB–622	...	N10276	100 (690)	43	111	420	43	54Ni–16Mo–15Cr	Smls. pipe & tube
B/SB–622	...	N10362	105 (725)	43	111	420	43	62Ni–22Mo–15Cr	Smls. pipe & tube
B/SB–622	...	N10629	110 (760)	44	112	410	44	66Ni–28Mo–3Fe–1.3Cr–0.25Al	Smls. pipe & tube
B/SB–622	...	N10665	110 (760)	44	112	410	44	65Ni–28Mo–2Fe	Smls. pipe & tube
B/SB–622	...	N10675	110 (760)	44	112	410	44	65Ni–29.5Mo–2Fe–2Cr	Smls. pipe & tube
B/SB–622	...	N12160	90 (620)	46	...	420	46	37Ni–30Co–28Cr–2.7Si	Smls. pipe & tube
B/SB–622	...	R20033	109 (750)	45	111	420	45	33Cr–31Ni–32Fe–1.5Mo–0.6Cu–N	Smls. pipe & tube

Copyrighted material licensed to Fermi National Laboratory by Clarivate Analytics (US) LLC, subscriptions.techstreet.com, downloaded on 2020-09-23 17:45:20 +0000 by Fermi National Laboratory User.
No further reproduction or distribution is permitted.

Table QW/QB-422
Ferrous and Nonferrous P-Numbers
Grouping of Base Metals for Qualification (Cont'd)

Spec. No.	Alloy, Type, or Grade	UNS No.	Minimum Specified Tensile, ksi (MPa)	Welding P-No.	Brazing P-No.	Brazing AWS B2.2 BM	ISO 15608 Group	Nominal Composition	Typical Product Form
					Nonferrous (Cont'd)				
B/SB–622	...	R30556	100 (690)	45	111	420	45	21Ni–30Fe–22Cr–18Co–3Mo–3W	Smls. pipe & tube
B/SB–625	...	N08031	94 (650)	45	111	420	45	31Ni–31Fe–27Cr–7Mo	Plate, sheet & strip
B/SB–625	...	N08904	71 (490)	45	111	420	8.2	44Fe–25Ni–21Cr–Mo	Plate, sheet & strip
B/SB–625	...	N08925	87 (600)	45	111	420	8.2	25Ni–20Cr–6Mo–Cu–N	Plate, sheet & strip
B/SB–625	...	N08926	94 (650)	45	111	420	8.2	25Ni–20Cr–6Mo–Co–N	Plate, sheet & strip
B/SB–625	...	R20033	109 (750)	45	111	420	45	33Cr–31Ni–32Fe–1.5Mo–0.6Cu–N	Plate, sheet & strip
B/SB–626	...	N06002	100 (690)	43	111	420	43	47Ni–22Cr–9Mo–18Fe	Welded tube
B/SB–626	...	N06007	90 (620)	45	111	420	43	47Ni–22Cr–19Fe–6Mo	Welded tube
B/SB–626	...	N06022	100 (690)	43	111	420	44	55Ni–21Cr–13.5Mo	Welded tube
B/SB–626	...	N06030	85 (585)	45	111	420	45	40Ni–29Cr–15Fe–5Mo	Welded tube
B/SB–626	...	N06035	85 (585)	43	111	420	43	58Ni–33Cr–8Mo	Welded tube
B/SB–626	...	N06059	100 (690)	43	111	420	43	59Ni–23Cr–16Mo	Welded tube
B/SB–626	...	N06200	100 (690)	43	111	420	43	59Ni–23Cr–16Mo–1.6Cu	Welded tube
B/SB–626	...	N06210	100 (690)	43	111	420	43	60Ni–19Cr–19Mo–1.8Ta	Welded tube
B/SB–626	...	N06230	110 (760)	43	111	420	43	53Ni–22Cr–14W–Co–Fe–Mo	Welded tube
B/SB–626	...	N06455	100 (690)	43	111	420	43	61Ni–16Mo–16Cr	Welded tube
B/SB–626	...	N06686	100 (690)	43	111	430	43	58Ni–21Cr–16Mo–3.5W	Welded tube
B/SB–626	...	N06975	85 (585)	45	111	430	45	49Ni–25Cr–18Fe–6Mo	Welded tube
B/SB–626	...	N06985	90 (620)	45	111	420	45	47Ni–22Cr–20Fe–7Mo	Welded tube
B/SB–626	...	N08031	94 (650)	45	111	420	45	31Ni–31Fe–27Cr–7Mo	Welded tube
B/SB–626	...	N08320	75 (515)	45	111	430	8.2	26Ni–22Cr–5Mo–Ti	Welded tube
B/SB–626	...	N10001	100 (690)	44	112	410	44	62Ni–28Mo–5Fe	Welded tube
B/SB–626	...	N10242	105 (725)	44	112	410	44	62Ni–25Mo–8Cr–2Fe	Welded tube
B/SB–626	...	N10276	100 (690)	43	111	420	43	54Ni–16Mo–15Cr	Welded tube
B/SB–626	...	N10362	105 (725)	43	111	420	43	62Ni–22Mo–15Cr	Welded tube
B/SB–626	...	N10629	110 (760)	44	112	410	44	66Ni–28Mo–3Fe–1.3Cr–0.25Al	Welded tube
B/SB–626	...	N10665	110 (760)	44	112	410	44	65Ni–28Mo–2Fe	Welded tube
B/SB–626	...	N10675	110 (760)	44	112	410	44	65Ni–29.5Mo–2Fe–2Cr	Welded tube
B/SB–626	...	N12160	90 (620)	46	...	420	46	37Ni–30Co–28Cr–2.7Si	Welded tube
B/SB–626	...	R20033	109 (750)	45	111	420	45	33Cr–31Ni–32Fe–1.5Mo–0.6Cu–N	Welded tube
B/SB–626	...	R30556	100 (690)	45	111	420	45	21Ni–30Fe–22Cr–18Co–3Mo–3W	Welded tube
B/SB–649	...	N08904	71 (490)	45	111	420	8.2	44Fe–25Ni–21Cr–Mo	Bar & wire
B/SB–649	...	N08925	87 (600)	45	111	420	8.2	25Ni–20Cr–6Mo–Cu–N	Bar & wire
B/SB–649	...	N08926	94 (650)	45	111	420	8.2	25Ni–20Cr–6Mo–Cu–N	Bar & wire
B/SB–649	...	R20033	109 (750)	45	111	420	45	33Cr–31Ni–32Fe–1.5Mo–0.6Cu–N	Bar & wire

Copyrighted material licensed to Fermi National Laboratory by Clarivate Analytics (US) LLC, subscriptions.techstreet.com, downloaded on 2020-09-23 17:45:20 +0000 by Fermi National Laboratory User.
No further reproduction or distribution is permitted.

Table QW/QB-422
Ferrous and Nonferrous P-Numbers
Grouping of Base Metals for Qualification (Cont'd)

Spec. No.	Alloy, Type, or Grade	UNS No.	Minimum Specified Tensile, ksi (MPa)	Welding P-No.	Brazing P-No.	Brazing AWS B2.2 BM	ISO 15608 Group	Nominal Composition	Typical Product Form
					Nonferrous (Cont'd)				
B/SB–653	R60702	R60702	55 (380)	61	117	600	61	99.2Zr	Smls. & welded fittings
B/SB–658	R60702	R60702	55 (380)	61	117	600	61	99.2Zr	Smls. & welded pipe
B/SB–658	R60705	R60705	80 (550)	62	117	600	62	95.5Zr+2.5Cb	Smls. & welded pipe
B/SB–668	...	N08028	73 (505)	45	111	420	45	31Ni–31Fe–29Cr–Mo	Smls. tube
B/SB–672	...	N08700	80 (550)	45	111	420	8.2	25Ni–47Fe–21Cr–5Mo	Bar & wire
B/SB–673	...	N08904	71 (490)	45	111	420	8.2	44Fe–25Ni–21Cr–Mo	Welded pipe
B/SB–673	...	N08925	87 (600)	45	111	420	8.2	25Ni–20Cr–6Mo–Cu–N	Welded pipe
B/SB–673	...	N08926	94 (650)	45	111	420	8.2	25Ni–20Cr–6Mo–Cu–N	Welded pipe
B/SB–674	...	N08904	71 (490)	45	111	420	8.2	44Fe–25Ni–21Cr–Mo	Welded tube
B/SB–674	...	N08925	87 (600)	45	111	420	8.2	25Ni–20Cr–6Mo–Cu–N	Welded tube
B/SB–674	...	N08926	94 (650)	45	111	420	8.2	25Ni–20Cr–6Mo–Cu–N	Welded tube
B/SB–675	...	N08367	95 (655)	45	111	420	8.2	46Fe–24Ni–21Cr–6Mo–N	Welded pipe > $^{3}/_{16}$ in. (5 mm)
B/SB–675	...	N08367	100 (690)	45	111	420	8.2	46Fe–24Ni–21Cr–6Mo–N	Welded pipe ≤ $^{3}/_{16}$ in. (5 mm)
B/SB–676	...	N08367	95 (655)	45	111	420	8.2	46Fe–24Ni–21Cr–6Mo–N	Welded tube > $^{3}/_{16}$ in. (5 mm)
B/SB–676	...	N08367	100 (690)	45	111	420	8.2	46Fe–24Ni–21Cr–6Mo–N	Welded tube ≤ $^{3}/_{16}$ in. (5 mm)
B/SB–677	...	N08904	71 (490)	45	111	420	8.2	44Fe–25Ni–21Cr–Mo	Smls. pipe & tube
B/SB–677	...	N08925	87 (600)	45	111	420	8.2	25Ni–20Cr–6Mo–Cu–N	Smls. pipe & tube
B/SB–677	...	N08926	94 (650)	45	111	420	8.2	25Ni–20Cr–6Mo–Cu–N	Smls. pipe & tube
B/SB–688	...	N08367	95 (655)	45	111	420	8.2	46Fe–24Ni–21Cr–6Mo–N	Plate, sheet & strip > $^{3}/_{16}$ in. (5 mm)
B/SB–688	...	N08367	100 (690)	45	111	420	8.2	46Fe–24Ni–21Cr–6Mo–N	Plate, sheet & strip ≤ $^{3}/_{16}$ in. (5 mm)
B/SB–690	...	N08367	95 (655)	45	111	420	8.2	46Fe–24Ni–21Cr–6Mo–N	Smls. pipe & tube > $^{3}/_{16}$ in. (5 mm)
B/SB–690	...	N08367	100 (690)	45	111	420	8.2	46Fe–24Ni–21Cr–6Mo–N	Smls. pipe & tube ≤ $^{3}/_{16}$ in. (5 mm)
B/SB–691	...	N08367	95 (655)	45	111	420	8.2	46Fe–24Ni–21Cr–6Mo–N	Rod, bar & wire
B/SB–704	1	N06625	120 (825)	43	111	430	43	60Ni–22Cr–9Mo–3.5Cb	Welded tube
B/SB–704	2	N06625	100 (690)	43	111	430	43	60Ni–22Cr–9Mo–3.5Cb	Welded tube
B/SB–704	...	N08825	85 (585)	45	111	430	45	42Ni–21.5Cr–3Mo–2.3Cu	Welded tube
B/SB–705	1	N06625	120 (825)	43	111	430	43	60Ni–22Cr–9Mo–3.5Cb	Welded pipe
B/SB–705	2	N06625	100 (690)	43	111	430	43	60Ni–22Cr–9Mo–3.5Cb	Welded pipe

Copyrighted material licensed to Fermi National Laboratory by Clarivate Analytics (US) LLC, subscriptions.techstreet.com, downloaded on 2020-09-23 17:45:20 +0000 by Fermi National Laboratory User.
No further reproduction or distribution is permitted.

Table QW/QB-422
Ferrous and Nonferrous P-Numbers
Grouping of Base Metals for Qualification (Cont'd)

Spec. No.	Alloy, Type, or Grade	UNS No.	Minimum Specified Tensile, ksi (MPa)	Welding P-No.	Brazing P-No.	Brazing AWS B2.2 BM	ISO 15608 Group	Nominal Composition	Typical Product Form
					Nonferrous (Cont'd)				
B/SB–705	...	N08825	85 (585)	45	111	430	45	42Ni–21.5Cr–3Mo–2.3Cu	Welded pipe
B/SB–709	...	N08028	73 (505)	45	111	420	45	31Ni–31Fe–29Cr–Mo	Plate, sheet & strip
B/SB–710	...	N08330	70 (485)	46	111	420	45	35Ni–19Cr–1.25Si	Welded pipe
B725	...	N02200	55 (380)	41	110	400	41	99.0Ni	Welded pipe
B725	...	N02201	50 (345)	41	110	400	41	99.0Ni–Low C	Welded pipe
B725	...	N04400	70 (485)	42	110	400	42	67Ni–30Cu	Welded pipe
B/SB–729	...	N08020	80 (550)	45	111	420	45	35Ni–35Fe–20Cr–Cb	Smls. pipe & tube
B730	...	N02200	55 (380)	41	110	400	41	99.0Ni	Welded tube
B730	...	N02201	50 (345)	41	110	400	41	99.0Ni–Low C	Welded tube
B730	...	N04400	70 (485)	42	110	400	42	67Ni–30Cu	Welded tube
B/SB–815	...	R31233	120 (825)	49	...	800	...	Co–26Cr–9Ni–5Mo–3Fe–2W	Rod
B/SB–818	...	R31233	120 (825)	49	...	800	...	Co–26Cr–9Ni–5Mo–3Fe–2W	Plate, sheet & strip
B819	C12200	C12200	30 (205)	...	107	300	NA	99.9Cu–P	Wrought pipe
B/SB–861	1	R50250	35 (240)	51	115	500	51.1	Ti	Smls. pipe
B/SB–861	2	R50400	50 (345)	51	115	500	51.2	Ti	Smls. pipe
B/SB–861	2H	R50400	58 (400)	51	115	500	51.2	Ti	Smls. pipe
B/SB–861	3	R50550	65 (450)	52	115	500	51.3	Ti	Smls. pipe
B/SB–861	7	R52400	50 (345)	51	115	500	52	Ti–Pd	Smls. pipe
B/SB–861	7H	R52400	58 (400)	51	115	500	52	Ti–Pd	Smls. pipe
B/SB–861	16	R52402	50 (345)	51	115	500	51.2	Ti–Pd	Smls. pipe
B/SB–861	16H	R52402	58 (400)	51	115	500	51.2	Ti–Pd	Smls. pipe
B/SB–861	26	R52404	50 (345)	51	115	500	51.2	Ti–Ru	Smls. pipe
B/SB–861	26H	R52404	58 (400)	51	115	500	51.2	Ti–Ru	Smls. pipe
B/SB–861	12	R53400	70 (485)	52	115	500	52	Ti–0.3Mo–0.8Ni	Smls. pipe
B/SB–861	38	R54250	130 (895)	54	115	500	53	Ti–4Al–2.5V–1.5Fe	Smls. pipe
B/SB–861	9	R56320	90 (620)	53	115	500	53	Ti–3Al–2.5V	Smls. pipe
B/SB–861	28	R56323	90 (620)	53	115	500	53	Ti–3Al–2.5V–0.1Ru	Smls. pipe
B/SB–862	1	R50250	35 (240)	51	115	500	51.1	Ti	Welded pipe
B/SB–862	2	R50400	50 (345)	51	115	500	51.2	Ti	Welded pipe
B/SB–862	2H	R50400	58 (400)	51	115	500	51.2	Ti	Welded pipe
B/SB–862	3	R50550	65 (450)	52	115	500	51.3	Ti	Welded pipe

Copyrighted material licensed to Fermi National Laboratory by Clarivate Analytics (US) LLC, subscriptions.techstreet.com, downloaded on 2020-09-23 17:45:20 +0000 by Fermi National Laboratory User.
No further reproduction or distribution is permitted.

Table QW/QB-422
Ferrous and Nonferrous P-Numbers
Grouping of Base Metals for Qualification (Cont'd)

Spec. No.	Alloy, Type, or Grade	UNS No.	Minimum Specified Tensile, ksi (MPa)	Welding P-No.	Brazing P-No.	Brazing AWS B2.2 BM	ISO 15608 Group	Nominal Composition	Typical Product Form
					Nonferrous (Cont'd)				
B/SB–862	7	R52400	50 (345)	51	115	500	52	Ti–Pd	Welded pipe
B/SB–862	7H	R52400	58 (400)	51	115	500	52	Ti–Pd	Welded pipe
B/SB–862	16	R52402	50 (345)	51	115	500	51.2	Ti–Pd	Welded pipe
B/SB–862	16H	R52402	58 (400)	51	115	500	51.2	Ti–Pd	Welded pipe
B/SB–862	26	R52404	50 (345)	51	115	500	51.2	Ti–Ru	Welded pipe
B/SB–862	26H	R52404	58 (400)	51	115	500	51.2	Ti–Ru	Welded pipe
B/SB–862	12	R53400	70 (485)	52	115	500	52	Ti–0.3Mo–0.8Ni	Welded pipe
B/SB–862	38	R54250	130 (895)	54	115	500	53	Ti–4Al–2.5V–1.5Fe	Welded pipe
B/SB–862	9	R56320	90 (620)	53	115	500	53	Ti–3Al–2.5V	Welded pipe
B/SB–862	28	R56323	90 (620)	53	115	500	53	Ti–3Al–2.5V–0.1Ru	Welded pipe
B/SB–928	5083	A95083	39 (270)	25	105	220	22.4	Al–4.4Mg–Mn	Plate & sheet > 1.5 in.–3 in. (38 mm–76 mm), incl.
B/SB–928	5086	A95086	35 (240)	25	105	220	22.4	Al–4.0Mg–Mn	Plate & sheet > 0.05 in.–2 in. (1.3 mm–51 mm), incl.
B/SB–928	5456	A95456	41 (285)	25	105	220	22.4	Al–5.1Mg–Mn	Plate & sheet > 1.5 in.–3 in. (38 mm–76 mm), incl.
B/SB–956	...	C70600	40 (275)	34	107	300	34	90Cu–10Ni	Finned welded tube
B/SB–956	...	C70620	40 (275)	34	107	300	34	90Cu–10Ni	Finned welded tube
B/SB–956	...	C71500	52 (360)	34	107	300	34	70Cu–30Ni	Finned welded tube
B/SB–956	...	C71520	52 (360)	34	107	300	34	70Cu–30Ni	Finned welded tube
EN or SB/EN 1706	EN AC 43000	...	22 (150)	26	104	210	24.2	Al–10Si–Mg	Castings

Copyrighted material licensed to Fermi National Laboratory by Clarivate Analytics (US) LLC, subscriptions.techstreet.com, downloaded on 2020-09-23 17:45:20 +0000 by Fermi National Laboratory User.
No further reproduction or distribution is permitted.

QW-423 ALTERNATE BASE MATERIALS FOR WELDER QUALIFICATION

(19) **QW-423.1** Base metal used for welder qualification may be substituted for the base metal specified in the WPS in accordance with the following table. Any base metal shown in the same row may be substituted in the performance qualification test coupon for the base metal(s) specified in the WPS followed during welder qualification. When a base metal shown in the left column of the table is used for welder qualification, the welder is qualified to weld all combinations of base metals shown in the right column, including unassigned metals of similar chemical composition to these metals.

Base Metal(s) Used for Performance Qualification	Base Metals Qualified
P-No. 1 through P-No. 15F, P-No. 34, or P-No. 41 through P-No. 49	P-No. 1 through P-No. 15F, P-No. 34, and P-No. 41 through P-No. 49
P-No. 21 through P-No. 26	P-No. 21 through P-No. 26
P-No. 51 through P-No. 53 or P-No. 61 or P-No. 62	P-No. 51 through P-No. 53 and P-No. 61 and P-No. 62
Any unassigned metal to the same unassigned metal	The unassigned metal to itself
Any unassigned metal to any P-Number metal	The unassigned metal to any metal assigned to the same P-Number as the qualified metal
Any unassigned metal to any other unassigned metal	The first unassigned metal to the second unassigned metal

QW-423.2 Metals used for welder qualification conforming to national or international standards or specifications may be considered as having the same P-Number as an assigned metal provided it meets the mechanical and chemical requirements of the assigned metal. The base metal specification and corresponding P-Number shall be recorded on the qualification record.

QW-424 BASE METALS USED FOR PROCEDURE QUALIFICATION

(19) **QW-424.1** Base metals are assigned P-Numbers in Table QW/QB-422; metals that do not appear in Table QW/QB-422 are considered to be unassigned metals except as otherwise defined for base metals having the same UNS numbers. Unassigned metals shall be identified in the WPS and on the PQR by specification, type, and grade, or by chemical analysis and mechanical properties. The minimum tensile strength shall be defined by the organization that specified the unassigned metal if the tensile strength of that metal is not defined by the material specification.

Base Metal(s) Used for Procedure Qualification Coupon	Base Metals Qualified
One metal from a P-Number to any metal from the same P-Number	Any metals assigned that P-Number
One metal from a P-Number to any metal from any other P-Number	Any metal assigned the first P-Number to any metal assigned the second P-Number
One metal from P-No. 15E to any metal from P-No. 15E	Any P-No. 15E or 5B metal to any metal assigned P-No. 15E or 5B
One metal from P-No. 15E to any metal from any other P-Number	Any P-No. 15E or 5B metal to any metal assigned the second P-Number
One metal from P-No. 3 to any metal from P-No. 3	Any P-No. 3 metal to any metal assigned P-No. 3 or 1
One metal from P-No. 4 to any metal from P-No. 4	Any P-No. 4 metal to any metal assigned P-No. 4, 3, or 1
One metal from P-No. 5A to any metal from P-No. 5A	Any P-No. 5A metal to any metal assigned P-No. 5A, 4, 3, or 1
One metal from P-No. 5A to a metal from P-No. 4, or P-No. 3, or P-No. 1	Any P-No. 5A metal to any metal assigned to P-No. 4, 3, or 1
One metal from P-No. 4 to a metal from P-No. 3 or P-No. 1	Any P-No. 4 metal to any metal assigned to P-No. 3 or 1
Any unassigned metal to the same unassigned metal	The unassigned metal to itself
Any unassigned metal to any P-Number metal	The unassigned metal to any metal assigned to the same P-Number as the qualified metal
Any unassigned metal to any metal from P-No. 15E	The unassigned metal to any metal assigned P-No. 15E or 5B
Any unassigned metal to any other unassigned metal	The first unassigned metal to the second unassigned metal

QW-424.2 For welds joining base metals to weld metal buildup or corrosion-resistant weld metal overlay, the buildup or overlay portion of the joint may be substituted in the test coupon by any P-Number base material that nominally matches the chemical analysis of the buildup or overlay.

Copyrighted material licensed to Fermi National Laboratory by Clarivate Analytics (US) LLC, subscriptions.techstreet.com, downloaded on 2020-09-23 17:45:20 +0000 by Fermi National Laboratory User.
No further reproduction or distribution is permitted.

QW-430 F-NUMBERS

QW-431 GENERAL

The following F-Number grouping of electrodes and welding rods in Table QW-432 is based essentially on their usability characteristics, which fundamentally determine the ability of welders to make satisfactory welds with a given filler metal. This grouping is made to reduce the number of welding procedure and performance qualifications, where this can logically be done. The grouping does not imply that base metals or filler metals within a group may be indiscriminately substituted for a metal that was used in the qualification test without consideration of the compatibility of the base and filler metals from the standpoint of metallurgical properties, postweld heat treatment design and service requirements, and mechanical properties.

Table QW-432
F-Numbers
Grouping of Electrodes and Welding Rods for Qualification (19)

F-No.	ASME Specification	AWS Classification	UNS No.
		Steel and Steel Alloys	
1	SFA-5.1	EXX20	...
1	SFA-5.1	EXX22	...
1	SFA-5.1	EXX24	...
1	SFA-5.1	EXX27	...
1	SFA-5.1	EXX28	...
1	SFA-5.4	EXXX(X)-26	...
1	SFA-5.5	EXX20-X	...
1	SFA-5.5	EXX27-X	...
2	SFA-5.1	EXX12	...
2	SFA-5.1	EXX13	...
2	SFA-5.1	EXX14	...
2	SFA-5.1	EXX19	...
2	SFA-5.5	E(X)XX13-X	...
3	SFA-5.1	EXX10	...
3	SFA-5.1	EXX11	...
3	SFA-5.5	E(X)XX10-X	...
3	SFA-5.5	E(X)XX11-X	...
4	SFA-5.1	EXX15	...
4	SFA-5.1	EXX16	...
4	SFA-5.1	EXX18	...
4	SFA-5.1	EXX18M	...
4	SFA-5.1	EXX48	...
4	SFA-5.4 other than austenitic and duplex	EXXX(X)-15	...
4	SFA-5.4 other than austenitic and duplex	EXXX(X)-16	...
4	SFA-5.4 other than austenitic and duplex	EXXX(X)-17	...
4	SFA-5.5	E(X)XX15-X	...
4	SFA-5.5	E(X)XX16-X	...
4	SFA-5.5	E(X)XX18-X	...
4	SFA-5.5	E(X)XX18M	...
4	SFA-5.5	E(X)XX18M1	...
4	SFA-5.5	E(X)XX45	...
5	SFA-5.4 austenitic and duplex	EXXX(X)-15	...
5	SFA-5.4 austenitic and duplex	EXXX(X)-16	...
5	SFA-5.4 austenitic and duplex	EXXX(X)-17	...
6	SFA-5.2	All classifications	...
6	SFA-5.9	All classifications	...
6	SFA-5.17	All classifications	...
6	SFA-5.18	All classifications	...
6	SFA-5.20	All classifications	...

Copyrighted material licensed to Fermi National Laboratory by Clarivate Analytics (US) LLC, subscriptions.techstreet.com, downloaded on 2020-09-23 17:45:20 +0000 by Fermi National Laboratory User.
No further reproduction or distribution is permitted.

Table QW-432
F-Numbers
Grouping of Electrodes and Welding Rods for Qualification (Cont'd)

F-No.	ASME Specification	AWS Classification	UNS No.
		Steel and Steel Alloys (Cont'd)	
6	SFA-5.22	All classifications	...
6	SFA-5.23	All classifications	...
6	SFA-5.25	All classifications	...
6	SFA-5.26	All classifications	...
6	SFA-5.28	All classifications	...
6	SFA-5.29	All classifications	...
6	SFA-5.30	INMs-X	...
6	SFA-5.30	IN5XX	...
6	SFA-5.30	IN3XX(X)	...
6	SFA-5.36	All classifications	...
		Aluminum and Aluminum Alloys	
21	SFA-5.3	E1100	A91100
21	SFA-5.3	E3003	A93003
21	SFA-5.10	ER1070	A91070
21	SFA-5.10	ER1080A	A91080
21	SFA-5.10	ER1100	A91100
21	SFA-5.10	ER1188	A91188
21	SFA-5.10	ER1200	A91200
21	SFA-5.10	ER1450	A91450
21	SFA-5.10	ER3103	A93103
21	SFA-5.10	R1070	A91070
21	SFA-5.10	R1080A	A91080
21	SFA-5.10	R1100	A91100
21	SFA-5.10	R1188	A91188
21	SFA-5.10	R1200	A91200
21	SFA-5.10	R1450	A91450
21	SFA-5.10	R3101	A93103
22	SFA-5.10	ER5087	A95087
22	SFA-5.10	ER5183	A95183
22	SFA-5.10	ER5183A	A95183
22	SFA-5.10	ER5187	A95187
22	SFA-5.10	ER5249	A95249
22	SFA-5.10	ER5356	A95356
22	SFA-5.10	ER5356A	A95356
22	SFA-5.10	ER5554	A95554
22	SFA-5.10	ER5556	A95556
22	SFA-5.10	ER5556A	A95556
22	SFA-5.10	ER5556B	A95556
22	SFA-5.10	ER5556C	A95556
22	SFA-5.10	ER5654	A95654
22	SFA-5.10	ER5654A	A95654
22	SFA-5.10	ER5754	A95754
22	SFA-5.10	R5087	A95087
22	SFA-5.10	R5183	A95183
22	SFA-5.10	R5183A	A95183
22	SFA-5.10	R5187	A95187
22	SFA-5.10	R5249	A95249
22	SFA-5.10	R5356	A95356
22	SFA-5.10	R5356A	A95356

Copyrighted material licensed to Fermi National Laboratory by Clarivate Analytics (US) LLC, subscriptions.techstreet.com, downloaded on 2020-09-23 17:45:20 +0000 by Fermi National Laboratory User.
No further reproduction or distribution is permitted.

Table QW-432
F-Numbers
Grouping of Electrodes and Welding Rods for Qualification (Cont'd)

F-No.	ASME Specification	AWS Classification	UNS No.
		Aluminum and Aluminum Alloys (Cont'd)	
22	SFA-5.10	R5554	A95554
22	SFA-5.10	R5556	A95556
22	SFA-5.10	R5556A	A95556
22	SFA-5.10	R5556B	A95556
22	SFA-5.10	R5556C	A95556
22	SFA-5.10	R5654	A95654
22	SFA-5.10	R5654A	A95654
22	SFA-5.10	R5754	A95754
23	SFA-5.3	E4043	A94043
23	SFA-5.10	ER4010	A94010
23	SFA-5.10	ER4018	A94018
23	SFA-5.10	ER4043	A94043
23	SFA-5.10	ER4043A	A94043
23	SFA-5.10	ER4046	A94046
23	SFA-5.10	ER4047	A94047
23	SFA-5.10	ER4047A	A94047
23	SFA-5.10	ER4643	A94643
23	SFA-5.10	ER4943	A94943
23	SFA-5.10	R4010	A94010
23	SFA-5.10	R4011	A94011
23	SFA-5.10	R4018	A94018
23	SFA-5.10	R-A356.0	A13560
23	SFA-5.10	R357.0	A03570
23	SFA-5.10	R-A357.0	A13570
23	SFA-5.10	R4043	A94043
23	SFA-5.10	R4043A	A94043
23	SFA-5.10	R4046	A94046
23	SFA-5.10	R4047A	A94047
23	SFA-5.10	R4047	A94047
23	SFA-5.10	R4643	A94643
23	SFA-5.10	R4943	A94943
25	SFA-5.10	ER2319	A92319
25	SFA-5.10	R2319	A92319
25	SFA-5.10	R206.0	A02060
26	SFA-5.10	ER4009	A94009
26	SFA-5.10	ER4145	A94145
26	SFA-5.10	R4009	A94009
26	SFA-5.10	R4145	A94145
26	SFA-5.10	R-C355.0	A33550
		Copper and Copper Alloys	
31	SFA-5.6	ECu	W60189
31	SFA-5.7	ERCu	C18980
32	SFA-5.6	ECuSi	W60656
32	SFA-5.7	ERCuSi-A	C65600
33	SFA-5.6	ECuSn-A	W60518
33	SFA-5.6	ECuSn-C	W60521
33	SFA-5.7	ERCuSn-A	C51800
33	SFA-5.7	ERCuSn-C	C52100
34	SFA-5.6	ECuNi	W60715
34	SFA-5.7	ERCuNi	C71580

Copyrighted material licensed to Fermi National Laboratory by Clarivate Analytics (US) LLC, subscriptions.techstreet.com, downloaded on 2020-09-23 17:45:20 +0000 by Fermi National Laboratory User.
No further reproduction or distribution is permitted.

Table QW-432
F-Numbers
Grouping of Electrodes and Welding Rods for Qualification (Cont'd)

F-No.	ASME Specification	AWS Classification	UNS No.
		Copper and Copper Alloys (Cont'd)	
34	SFA-5.30	IN67	C71581
35	SFA-5.8	RBCuZn-A	C47000
35	SFA-5.8	RBCuZn-B	C68000
35	SFA-5.8	RBCuZn-C	C68100
35	SFA-5.8	RBCuZn-D	C77300
36	SFA-5.6	ECuAl-A2	W60614
36	SFA-5.6	ECuAl-B	W60619
36	SFA-5.7	ERCuAl-A1	C61000
36	SFA-5.7	ERCuAl-A2	C61800
36	SFA-5.7	ERCuAl-A3	C62400
37	SFA-5.6	ECuMnNiAl	C60633
37	SFA-5.6	ECuNiAl	C60632
37	SFA-5.7	ERCuMnNiAl	C63380
37	SFA-5.7	ERCuNiAl	C63280
		Nickel and Nickel Alloys	
41	SFA-5.11	ENi-1	W82141
41	SFA-5.14	ERNi-1	N02061
41	SFA-5.30	IN61	N02061
42	SFA-5.11	ENiCu-7	W84190
42	SFA-5.14	ERNiCu-7	N04060
42	SFA-5.14	ERNiCu-8	N05504
42	SFA-5.30	IN60	N04060
43	SFA-5.11	ENiCr-4	W86172
43	SFA-5.11	ENiCrCoMo-1	W86117
43	SFA-5.11	ENiCrFe-1	W86132
43	SFA-5.11	ENiCrFe-2	W86133
43	SFA-5.11	ENiCrFe-3	W86182
43	SFA-5.11	ENiCrFe-4	W86134
43	SFA-5.11	ENiCrFe-7	W86152
43	SFA-5.11	ENiCrFe-9	W86094
43	SFA-5.11	ENiCrFe-10	W86095
43	SFA-5.11	ENiCrFe-12	W86025
43	SFA-5.11	ENiCrMo-2	W86002
43	SFA-5.11	ENiCrMo-3	W86112
43	SFA-5.11	ENiCrMo-4	W80276
43	SFA-5.11	ENiCrMo-5	W80002
43	SFA-5.11	ENiCrMo-6	W86620
43	SFA-5.11	ENiCrMo-7	W86455
43	SFA-5.11	ENiCrMo-10	W86022
43	SFA-5.11	ENiCrMo-12	W86032
43	SFA-5.11	ENiCrMo-13	W86059
43	SFA-5.11	ENiCrMo-14	W86026
43	SFA-5.11	ENiCrMo-17	W86200
43	SFA-5.11	ENiCrMo-18	W86650
43	SFA-5.11	ENiCrMo-19	W86058
43	SFA-5.11	ENiCrWMo-1	W86231
43	SFA-5.14	ERNiCr-3	N06082
43	SFA-5.14	ERNiCr-4	N06072
43	SFA-5.14	ERNiCr-6	N06076

Copyrighted material licensed to Fermi National Laboratory by Clarivate Analytics (US) LLC, subscriptions.techstreet.com, downloaded on 2020-09-23 17:45:20 +0000 by Fermi National Laboratory User.
No further reproduction or distribution is permitted.

Table QW-432
F-Numbers
Grouping of Electrodes and Welding Rods for Qualification (Cont'd)

F-No.	ASME Specification	AWS Classification	UNS No.
		Nickel and Nickel Alloys (Cont'd)	
43	SFA-5.14	ERNiCr-7	N06073
43	SFA-5.14	ERNiCrCoMo-1	N06617
43	SFA-5.14	ERNiCrFe-5	N06062
43	SFA-5.14	ERNiCrFe-6	N07092
43	SFA-5.14	ERNiCrFe-7	N06052
43	SFA-5.14	ERNiCrFe-7A	N06054
43	SFA-5.14	ERNiCrFe-8	N07069
43	SFA-5.14	ERNiCrFe-11	N06601
43	SFA-5.14	ERNiCrFe-12	N06025
43	SFA-5.14	ERNiCrFe-13	N06055
43	SFA-5.14	ERNiCrFe-14	N06043
43	SFA-5.14	ERNiCrFeAl-1	N06693
43	SFA-5.14	ERNiCrMo-2	N06002
43	SFA-5.14	ERNiCrMo-3	N06625
43	SFA-5.14	ERNiCrMo-4	N10276
43	SFA-5.14	ERNiCrMo-7	N06455
43	SFA-5.14	ERNiCrMo-10	N06022
43	SFA-5.14	ERNiCrMo-13	N06059
43	SFA-5.14	ERNiCrMo-14	N06686
43	SFA-5.14	ERNiCrMo-16	N06057
43	SFA-5.14	ERNiCrMo-17	N06200
43	SFA-5.14	ERNiCrMo-18	N06650
43	SFA-5.14	ERNiCrMo-19	N06058
43	SFA-5.14	ERNiCrMo-20	N06660
43	SFA-5.14	ERNiCrMo-21	N06205
43	SFA-5.14	ERNiCrMo-22	N06035
43	SFA-5.14	ERNiCrWMo-1	N06231
43	SFA-5.30	IN52	N06052
43	SFA-5.30	IN62	N06062
43	SFA-5.30	IN6A	N07092
43	SFA-5.30	IN82	N06082
43	SFA-5.34	All classifications	...
44	SFA-5.11	ENiMo-1	W80001
44	SFA-5.11	ENiMo-3	W80004
44	SFA-5.11	ENiMo-7	W80665
44	SFA-5.11	ENiMo-8	W80008
44	SFA-5.11	ENiMo-9	W80009
44	SFA-5.11	ENiMo-10	W80675
44	SFA-5.11	ENiMo-11	W80629
44	SFA-5.14	ERNiMo-1	N10001
44	SFA-5.14	ERNiMo-2	N10003
44	SFA-5.14	ERNiMo-3	N10004
44	SFA-5.14	ERNiMo-7	N10665
44	SFA-5.14	ERNiMo-8	N10008
44	SFA-5.14	ERNiMo-9	N10009
44	SFA-5.14	ERNiMo-10	N10675
44	SFA-5.14	ERNiMo-11	N10629
44	SFA-5.14	ERNiMo-12	N10242
45	SFA-5.11	ENiCrMo-1	W86007
45	SFA-5.11	ENiCrMo-9	W86985
45	SFA-5.11	ENiCrMo-11	W86030

Copyrighted material licensed to Fermi National Laboratory by Clarivate Analytics (US) LLC, subscriptions.techstreet.com, downloaded on 2020-09-23 17:45:20 +0000 by Fermi National Laboratory User.
No further reproduction or distribution is permitted.

Table QW-432
F-Numbers
Grouping of Electrodes and Welding Rods for Qualification (Cont'd)

F-No.	ASME Specification	AWS Classification	UNS No.
		Nickel and Nickel Alloys (Cont'd)	
45	SFA-5.14	ERNiCrMo-1	N06007
45	SFA-5.14	ERNiCrMo-8	N06975
45	SFA-5.14	ERNiCrMo-9	N06985
45	SFA-5.14	ERNiCrMo-11	N06030
45	SFA-5.14	ERNiFeCr-1	N08065
46	SFA-5.11	ENiCrFeSi-1	W86045
46	SFA-5.14	ERNiCrFeSi-1	N06045
46	SFA-5.14	ERNiCoCrSi-1	N12160
		Titanium and Titanium Alloys	
51	SFA-5.16	ERTi-1	R50100
51	SFA-5.16	ERTi-11	R52251
51	SFA-5.16	ERTi-13	R53423
51	SFA-5.16	ERTi-17	R52253
51	SFA-5.16	ERTi-27	R52255
51	SFA-5.16	ERTi-2	R50120
51	SFA-5.16	ERTi-7	R52401
51	SFA-5.16	ERTi-14	R53424
51	SFA-5.16	ERTi-16	R52403
51	SFA-5.16	ERTi-26	R52405
51	SFA-5.16	ERTi-30	R53531
51	SFA-5.16	ERTi-33	R53443
51	SFA-5.16	ERTi-3	R50125
51	SFA-5.16	ERTi-15A	R53416
51	SFA-5.16	ERTi-31	R53533
51	SFA-5.16	ERTi-34	R53444
52	SFA-5.16	ERTi-4	R50130
53	SFA-5.16	ERTi-9	R56320
53	SFA-5.16	ERTi-9ELI	R56321
53	SFA-5.16	ERTi-18	R56326
53	SFA-5.16	ERTi-28	R56324
54	SFA-5.16	ERTi-12	R53400
55	SFA-5.16	ERTi-5	R56400
55	SFA-5.16	ERTi-23	R56408
55	SFA-5.16	ERTi-29	R56414
55	SFA-5.16	ERTi-24	R56415
55	SFA-5.16	ERTi-25	R56413
55	SFA-5.16	ERTi-38	R54251
56	SFA-5.16	ERTi-32	R55112
		Zirconium and Zirconium Alloys	
61	SFA-5.24	ERZr2	R60702
61	SFA-5.24	ERZr3	R60704
61	SFA-5.24	ERZr4	R60705
		Hard-Facing Weld Metal Overlay	
71	SFA-5.13	ECoCr-A	W73006
71	SFA-5.13	ECoCr-B	W73012
71	SFA-5.13	ECoCr-C	W73001
71	SFA-5.13	ECoCr-E	W73021

Copyrighted material licensed to Fermi National Laboratory by Clarivate Analytics (US) LLC, subscriptions.techstreet.com, downloaded on 2020-09-23 17:45:20 +0000 by Fermi National Laboratory User.
No further reproduction or distribution is permitted.

Table QW-432
F-Numbers
Grouping of Electrodes and Welding Rods for Qualification (Cont'd)

F-No.	ASME Specification	AWS Classification	UNS No.
		Hard-Facing Weld Metal Overlay (Cont'd)	
71	SFA-5.13	ECuAl-A2	W60617
71	SFA-5.13	ECuAl-B	W60619
71	SFA-5.13	ECuAl-C	W60625
71	SFA-5.13	ECuAl-D	W61625
71	SFA-5.13	ECuAl-E	W62625
71	SFA-5.13	ECuMnNiAl	W60633
71	SFA-5.13	ECuNi	W60715
71	SFA-5.13	ECuNiAl	W60632
71	SFA-5.13	ECuSi	W60656
71	SFA-5.13	ECuSn-A	W60518
71	SFA-5.13	ECuSn-C	W60521
71	SFA-5.13	EFe1	W74001
71	SFA-5.13	EFe2	W74002
71	SFA-5.13	EFe3	W74003
71	SFA-5.13	EFe4	W74004
71	SFA-5.13	EFe5	W75110
71	SFA-5.13	EFe6	W77510
71	SFA-5.13	EFe7	W77610
71	SFA-5.13	EFeCr-A1A	W74011
71	SFA-5.13	EFeCr-A2	W74012
71	SFA-5.13	EFeCr-A3	W74013
71	SFA-5.13	EFeCr-A4	W74014
71	SFA-5.13	EFeCr-A5	W74015
71	SFA-5.13	EFeCr-A6	W74016
71	SFA-5.13	EFeCr-A7	W74017
71	SFA-5.13	EFeCr-A8	W74018
71	SFA-5.13	EFeCr-E1	W74211
71	SFA-5.13	EFeCr-E2	W74212
71	SFA-5.13	EFeCr-E3	W74213
71	SFA-5.13	EFeCr-E4	W74214
71	SFA-5.13	EFeMn-A	W79110
71	SFA-5.13	EFeMn-B	W79310
71	SFA-5.13	EFeMn-C	W79210
71	SFA-5.13	EFeMn-D	W79410
71	SFA-5.13	EFeMn-E	W79510
71	SFA-5.13	EFeMn-F	W79610
71	SFA-5.13	EFeMnCr	W79710
71	SFA-5.13	ENiCr-C	W89606
71	SFA-5.13	ENiCrFeCo	W83002
71	SFA-5.13	ENiCrMo-5A	W80002
71	SFA-5.13	EWCX-12/30	...
71	SFA-5.13	EWCX-20/30	...
71	SFA-5.13	EWCX-30/40	...
71	SFA-5.13	EWCX-40	...
71	SFA-5.13	EWCX-40/120	...
72	SFA-5.21	ERCCoCr-A	W73036
72	SFA-5.21	ERCCoCr-B	W73042
72	SFA-5.21	ERCCoCr-C	W73031
72	SFA-5.21	ERCCoCr-E	W73041
72	SFA-5.21	ERCCoCr-G	W73032

Copyrighted material licensed to Fermi National Laboratory by Clarivate Analytics (US) LLC, subscriptions.techstreet.com, downloaded on 2020-09-23 17:45:20 +0000 by Fermi National Laboratory User.
No further reproduction or distribution is permitted.

Table QW-432
F-Numbers
Grouping of Electrodes and Welding Rods for Qualification (Cont'd)

F-No.	ASME Specification	AWS Classification	UNS No.
		Hard-Facing Weld Metal Overlay (Cont'd)	
72	SFA-5.21	ERCCuAl-A2	W60618
72	SFA-5.21	ERCCuAl-A3	W60624
72	SFA-5.21	ERCCuAl-C	W60626
72	SFA-5.21	ERCCuAl-D	W61626
72	SFA-5.21	ERCCuAl-E	W62626
72	SFA-5.21	ERCCuSi-A	W60657
72	SFA-5.21	ERCCuSn-A	W60518
72	SFA-5.21	ERCCuSn-D	W60524
72	SFA-5.21	ERCFe-1	W74030
72	SFA-5.21	ERCFe-1A	W74031
72	SFA-5.21	ERCFe-2	W74032
72	SFA-5.21	ERCFe-3	W74033
72	SFA-5.21	ERCFe-5	W74035
72	SFA-5.21	ERCFe-6	W77530
72	SFA-5.21	ERCFe-8	W77538
72	SFA-5.21	ERCFeCr-A	W74531
72	SFA-5.21	ERCFeCr-A1A	W74530
72	SFA-5.21	ERCFeCr-A3A	W74533
72	SFA-5.21	ERCFeCr-A4	W74534
72	SFA-5.21	ERCFeCr-A5	W74535
72	SFA-5.21	ERCFeCr-A9	W74539
72	SFA-5.21	ERCFeCr-A10	W74540
72	SFA-5.21	ERCFeMn-C	W79230
72	SFA-5.21	ERCFeMn-F	W79630
72	SFA-5.21	ERCFeMn-G	W79231
72	SFA-5.21	ERCFeMn-H	W79232
72	SFA-5.21	ERCFeMnCr	W79730
72	SFA-5.21	ERCNiCr-A	W89634
72	SFA-5.21	ERCNiCr-B	W89635
72	SFA-5.21	ERCNiCr-C	W89636
72	SFA-5.21	ERCNiCrFeCo	W83032
72	SFA-5.21	ERCNiCrMo-5A	W80036
72	SFA-5.21	ERCoCr-A	R30006
72	SFA-5.21	ERCoCr-B	R30012
72	SFA-5.21	ERCoCr-C	R30001
72	SFA-5.21	ERCoCr-E	R30021
72	SFA-5.21	ERCoCr-F	R30002
72	SFA-5.21	ERCoCr-G	R30014
72	SFA-5.21	ERCuAl-A2	C61800
72	SFA-5.21	ERCuAl-A3	C62400
72	SFA-5.21	ERCuAl-C	C62580
72	SFA-5.21	ERCuAl-D	C62581
72	SFA-5.21	ERCuAl-E	C62582
72	SFA-5.21	ERCuSi-A	C65600
72	SFA-5.21	ERCuSn-A	C51800
72	SFA-5.21	ERCuSn-D	C52400
72	SFA-5.21	ERFe-1	T74000
72	SFA-5.21	ERFe-1A	T74001
72	SFA-5.21	ERFe-2	T74002
72	SFA-5.21	ERFe-3	T74003

Copyrighted material licensed to Fermi National Laboratory by Clarivate Analytics (US) LLC, subscriptions.techstreet.com, downloaded on 2020-09-23 17:45:20 +0000 by Fermi National Laboratory User.
No further reproduction or distribution is permitted.

Table QW-432
F-Numbers
Grouping of Electrodes and Welding Rods for Qualification (Cont'd)

F-No.	ASME Specification	AWS Classification	UNS No.
		Hard-Facing Weld Metal Overlay (Cont'd)	
72	SFA-5.21	ERFe-5	T74005
72	SFA-5.21	ERFe-6	T74006
72	SFA-5.21	ERFe-8	T74008
72	SFA-5.21	ERFeCr-A	...
72	SFA-5.21	ERFeCr-A1A	...
72	SFA-5.21	ERFeCr-A3A	...
72	SFA-5.21	ERFeCr-A4	...
72	SFA-5.21	ERFeCr-A5	...
72	SFA-5.21	ERFeCr-A9	...
72	SFA-5.21	ERFeCr-A10	...
72	SFA-5.21	ERFeMn-C	...
72	SFA-5.21	ERFeMn-F	...
72	SFA-5.21	ERFeMn-G	...
72	SFA-5.21	ERFeMn-H	...
72	SFA-5.21	ERFeMnCr	...
72	SFA-5.21	ERNiCr-A	N99644
72	SFA-5.21	ERNiCr-B	N99645
72	SFA-5.21	ERNiCr-C	N99646
72	SFA-5.21	ERNiCr-D	N99647
72	SFA-5.21	ERNiCr-E	N99648
72	SFA-5.21	ERNiCrFeCo	F46100
72	SFA-5.21	ERNiCrMo-5A	N10006
72	SFA-5.21	ERWCX-20/30	...
72	SFA-5.21	ERWCX-30/40	...
72	SFA-5.21	ERWCX-40	...
72	SFA-5.21	ERWCX-40/120	...
72	SFA-5.21	RWCX-20/30	...
72	SFA-5.21	RWCX-30/40	...
72	SFA-5.21	RWCX-40	...
72	SFA-5.21	RWCX-40/120	...

Copyrighted material licensed to Fermi National Laboratory by Clarivate Analytics (US) LLC, subscriptions.techstreet.com, downloaded on 2020-09-23 17:45:20 +0000 by Fermi National Laboratory User.
No further reproduction or distribution is permitted.

QW-433 ALTERNATE F-NUMBERS FOR WELDER PERFORMANCE QUALIFICATION

The following tables identify the filler metal or electrode that the welder used during qualification testing as "Qualified With," and the electrodes or filler metals that the welder is qualified to use in production welding as "Qualified For." See Table QW-432 for the F-Number assignments.

Qualified With → / Qualified For ↓	F-No. 1 With Backing	F-No. 1 Without Backing	F-No. 2 With Backing	F-No. 2 Without Backing	F-No. 3 With Backing	F-No. 3 Without Backing	F-No. 4 With Backing	F-No. 4 Without Backing	F-No. 5 With Backing	F-No. 5 Without Backing
F-No. 1 With Backing	X	X	X	X	X	X	X	X	X	X
F-No. 1 Without Backing		X								
F-No. 2 With Backing			X	X	X	X	X	X		
F-No. 2 Without Backing				X						
F-No. 3 With Backing					X	X	X	X		
F-No. 3 Without Backing						X				
F-No. 4 With Backing							X	X		
F-No. 4 Without Backing								X		
F-No. 5 With Backing									X	X
F-No. 5 Without Backing										X

Qualified With	Qualified For
Any F-No. 6	All F-No. 6 [Note (1)]
Any F-No. 21 through F-No. 26	All F-No. 21 through F-No. 26
Any F-No. 31, F-No. 32, F-No. 33, F-No. 35, F-No. 36, or F-No. 37	Only the same F-Number as was used during the qualification test
F-No. 34 or any F-No. 41 through F-No. 46	F-No. 34 and all F-No. 41 through F-No. 46
Any F-No. 51 through F-No. 55	All F-No. 51 through F-No. 55
Any F-No. 61	All F-No. 61
Any F-No. 71 through F-No. 72	Only the same F-Number as was used during the qualification test

NOTE:
(1) Deposited weld metal made using a bare rod not covered by an SFA Specification but which conforms to an analysis listed in Table QW-442 shall be considered to be classified as F-No. 6.

Copyrighted material licensed to Fermi National Laboratory by Clarivate Analytics (US) LLC, subscriptions.techstreet.com, downloaded on 2020-09-23 17:45:20 +0000 by Fermi National Laboratory User.
No further reproduction or distribution is permitted.

QW-440 WELD METAL CHEMICAL COMPOSITION

QW-441 GENERAL

Identification of weld metal chemical composition designated on the PQR and WPS shall be as given in QW-404.5.

Table QW-442
A-Numbers
Classification of Ferrous Weld Metal Analysis for Procedure Qualification

		Analysis, % [Note (1)] and [Note (2)]					
A-No.	Types of Weld Deposit	C	Cr	Mo	Ni	Mn	Si
1	Mild Steel	0.20	0.20	0.30	0.50	1.60	1.0
2	Carbon-Molybdenum	0.15	0.50	0.40–0.65	0.50	1.60	1.0
3	Chrome (0.4% to 2%)-Molybdenum	0.15	0.40–2.00	0.40–0.65	0.50	1.60	1.0
4	Chrome (2% to 4%)-Molybdenum	0.15	2.00–4.00	0.40–1.50	0.50	1.60	2.0
5	Chrome (4% to 10.5%)-Molybdenum	0.15	4.00–10.5	0.40–1.50	0.80	1.20	2.0
6	Chrome-Martensitic	0.15	11.0–15.0	0.70	0.80	2.00	1.0
7	Chrome-Ferritic	0.15	11.0–30.0	1.00	0.80	1.00	3.0
8	Chromium-Nickel	0.15	14.5–30.0	4.00	7.50–15.0	2.50	1.0
9	Chromium-Nickel	0.30	19.0–30.0	6.00	15.0–37.0	2.50	1.0
10	Nickel to 4%	0.15	0.50	0.55	0.80–4.00	1.70	1.0
11	Manganese-Molybdenum	0.17	0.50	0.25–0.75	0.85	1.25–2.25	1.0
12	Nickel–Chrome—Molybdenum	0.15	1.50	0.25–0.80	1.25–2.80	0.75–2.25	1.0

NOTES:
(1) Single values shown above are maximum.
(2) Only listed elements are used to determine A-numbers.

Copyrighted material licensed to Fermi National Laboratory by Clarivate Analytics (US) LLC, subscriptions.techstreet.com, downloaded on 2020-09-23 17:45:20 +0000 by Fermi National Laboratory User.
No further reproduction or distribution is permitted.

QW-450 SPECIMENS
QW-451 PROCEDURE QUALIFICATION THICKNESS LIMITS AND TEST SPECIMENS

Table QW-451.1
Groove-Weld Tension Tests and Transverse-Bend Tests

Thickness T of Test Coupon, Welded, in. (mm)	Range of Thickness T of Base Metal, Qualified, in. (mm) [Note (1)] and [Note (2)]		Maximum Thickness t of Deposited Weld Metal, Qualified, in. (mm) [Note (1)] and [Note (2)]	Type and Number of Tests Required (Tension and Guided-Bend Tests) [Note (2)]			
	Min.	Max.		Tension, QW-150	Side Bend, QW-160	Face Bend, QW-160	Root Bend, QW-160
Less than 1/16 (1.5)	T	$2T$	$2t$	2	...	2	2
1/16 to 3/8 (1.5 to 10), incl.	1/16 (1.5)	$2T$	$2t$	2	[Note (5)]	2	2
Over 3/8 (10), but less than 3/4 (19)	3/16 (5)	$2T$	$2t$	2	[Note (5)]	2	2
3/4 (19) to less than 1 1/2 (38)	3/16 (5)	$2T$	$2t$ when t < 3/4 (19)	2 [Note (4)]	4	...	...
3/4 (19) to less than 1 1/2 (38)	3/16 (5)	$2T$	$2T$ when t ≥ 3/4 (19)	2 [Note (4)]	4	...	...
1 1/2 (38) to 6 (150), incl.	3/16 (5)	8 (200) [Note (3)]	$2t$ when t < 3/4 (19)	2 [Note (4)]	4	...	...
1 1/2 (38) to 6 (150), incl.	3/16 (5)	8 (200) [Note (3)]	8 (200) [Note (3)] when t ≥ 3/4 (19)	2 [Note (4)]	4	...	...
Over 6 (150) [Note (6)]	3/16 (5)	$1.33T$	$2t$ when t < 3/4(19)	2 [Note (4)]	4	...	...
Over 6 (150) [Note (6)]	3/16 (5)	$1.33T$	$1.33T$ when t ≥ 3/4 (19)	2 [Note (4)]	4	...	...

NOTES:
(1) The following variables further restrict the limits shown in this table when they are referenced in QW-250 for the process under consideration: QW-403.9, QW-403.10, and QW-404.32. Also, QW-202.2, QW-202.3, and QW-202.4 provide exemptions that supersede the limits of this table.
(2) For combination of welding procedures, see QW-200.4.
(3) For the SMAW, SAW, GMAW, PAW, LLBW, and GTAW welding processes only; otherwise per Note (1) or $2T$, or $2t$, whichever is applicable.
(4) see QW-151.1, QW-151.2, and QW-151.3 for details on multiple specimens when coupon thicknesses are over 1 in. (25 mm).
(5) Four side-bend tests may be substituted for the required face- and root-bend tests, when thickness T is 3/8 in. (10 mm) and over.
(6) For test coupons over 6 in. (150 mm) thick, the full thickness of the test coupon shall be welded.

Copyrighted material licensed to Fermi National Laboratory by Clarivate Analytics (US) LLC, subscriptions.techstreet.com, downloaded on 2020-09-23 17:45:20 +0000 by Fermi National Laboratory User.
No further reproduction or distribution is permitted.

Table QW-451.2
Groove-Weld Tension Tests and Longitudinal-Bend Tests

Thickness T of Test Coupon Welded, in. (mm)	Range of Thickness T of Base Metal Qualified, in. (mm) [Note (1)] and [Note (2)]		Thickness t of Deposited Weld Metal Qualified, in. (mm) [Note (1)] and [Note (2)]	Type and Number of Tests Required (Tension and Guided-Bend Tests) [Note (2)]		
	Min.	Max.	Max.	Tension, QW-150	Face Bend, QW-160	Root Bend, QW-160
Less than 1/16 (1.5)	T	$2T$	$2t$	2	2	2
1/16 to 3/8 (1.5 to 10), incl.	1/16 (1.5)	$2T$	$2t$	2	2	2
Over 3/8 (10)	3/16 (5)	$2T$	$2t$	2	2	2

NOTES:
(1) The following variables further restrict the limits shown in this table when they are referenced in QW-250 for the process under consideration: QW-403.9, QW-403.10, and QW-404.32. Also, QW-202.2, QW-202.3, and QW-202.4 provide exemptions that supersede the limits of this table.
(2) For combination of welding procedures, see QW-200.4.

Table QW-451.3
Fillet-Weld Tests

(19)

Type of Joint	Thickness of Test Coupons as Welded, in.	Range Qualified	Type and Number of Tests Required [Figure QW-462.4(a) or Figure QW-462.4(d)] Macro
Fillet	Per Figure QW-462.4(a)	All fillet sizes on all base metal thicknesses and all diameters	5
Fillet	Per Figure QW-462.4(d)		4

GENERAL NOTE: A production assembly mockup may be substituted in accordance with QW-181.1.1.

Table QW-451.4
Fillet Welds Qualified by Groove-Weld Tests

(19)

Thickness T of Test Coupon (Plate or Pipe) as Welded	Range Qualified	Type and Number of Tests Required
All groove tests	All fillet sizes on all base metal thicknesses and all diameters	Fillet welds are qualified when the groove weld is qualified in accordance with either Table QW-451.1 or Table QW-451.2 (see QW-202.2)

Copyrighted material licensed to Fermi National Laboratory by Clarivate Analytics (US) LLC, subscriptions.techstreet.com, downloaded on 2020-09-23 17:45:20 +0000 by Fermi National Laboratory User.
No further reproduction or distribution is permitted.

QW-452 PERFORMANCE QUALIFICATION THICKNESS LIMITS AND TEST SPECIMENS

QW-452.1 Groove-Weld Test. The following tables identify the required type and number of tests and the thickness of weld metal qualified.

(19)

Table QW-452.1(a) Test Specimens

Thickness of Weld Metal, in. (mm)	Type and Number of Examinations and Test Specimens Required			
	Visual Examination per QW-302.4	Side Bend QW-462.2 [Note (1)]	Face Bend QW-462.3(a) or QW-462.3(b) [Note (1)], [Note (2)]	Root Bend QW-462.3(a) or QW-462.3(b) [Note (1)], [Note (2)]
Less than 3/8 (10)	X	...	1	1
3/8 (10) to less than 3/4 (19)	X	2 [Note (3)]	...	...
3/4 (19) and over	X	2	...	...

GENERAL NOTE: The "Thickness of Weld Metal" is the total weld metal thickness deposited by all welders and all processes in the test coupon exclusive of the weld reinforcement.

NOTES:

(1) To qualify using positions 5G or 6G, a total of four bend specimens are required. To qualify using a combination of 2G and 5G in a single test coupon, a total of six bend specimens are required. see QW-302.3. The type of bend test shall be based on weld metal thickness.

(2) Coupons tested by face and root bends shall be limited to weld deposit made by one welder with one or two processes or two welders with one process each. Weld deposit by each welder and each process shall be present on the convex surface of the appropriate bent specimen.

(3) One face and root bend may be substituted for the two side bends. For a test coupon welded in the 5G or 6G position, two face and two root bends may be substituted for the four side bends in accordance with Figure QW-463.2(d). For a test coupon welded using a combination of 2G and 5G positions, three face and three root bends may be substituted for the six side bends in accordance with Figure QW-463.2(f) or Figure QW-463.2(g).

Table QW-452.1(b) Thickness of Weld Metal Qualified

Thickness, t, of Weld Metal in the Coupon, in. (mm) [Note (1)] and [Note (2)]	Thickness of Weld Metal Qualified [Note (3)]
All	$2t$
1/2 (13) and over with a minimum of three layers	Maximum to be welded

NOTES:

(1) When more than one welder, process, or set of essential variables is used during welding of a test coupon, the thickness, t, of the weld metal in the coupon deposited by each welder, for each process, and with each set of essential variables shall be determined and used individually in the "Thickness, t, of Weld Metal in the Coupon" column to determine the "Thickness of Weld Metal Qualified."

(2) Two or more pipe test coupons with different weld metal thickness may be used to determine the weld metal thickness qualified and that thickness may be applied to production welds to the smallest diameter for which the welder is qualified in accordance with Table QW-452.3.

(3) Thickness of test coupon of 3/4 in. (19 mm) or over shall be used for qualifying a combination of three or more welders each of whom may use the same or a different welding process.

Copyrighted material licensed to Fermi National Laboratory by Clarivate Analytics (US) LLC, subscriptions.techstreet.com, downloaded on 2020-09-23 17:45:20 +0000 by Fermi National Laboratory User.
No further reproduction or distribution is permitted.

Table QW-452.3
Groove-Weld Diameter Limits

Outside Diameter of Test Coupon, in. (mm)	Outside Diameter Qualified, in. (mm)	
	Min.	Max.
Less than 1 (25)	Size welded	Unlimited
1 (25) to 2 7/8 (73)	1 (25)	Unlimited
Over 2 7/8 (73)	2 7/8 (73)	Unlimited

GENERAL NOTES:
(a) Type and number of tests required shall be in accordance with QW-452.1.
(b) 2 7/8 in. (73 mm) O.D. is the equivalent of NPS 2 1/2 (DN 65).

Table QW-452.4
Small Diameter Fillet-Weld Test

Outside Diameter of Test Coupon, in. (mm)	Minimum Outside Diameter, Qualified, in. (mm)	Qualified Thickness
Less than 1 (25)	Size welded	All
1 (25) to 2 7/8 (73)	1 (25)	All
Over 2 7/8 (73)	2 7/8 (73)	All

GENERAL NOTES:
(a) Type and number of tests required shall be in accordance with Table QW-452.5.
(b) 2 7/8 in. (73 mm) O.D. is considered the equivalent of NPS 2 1/2 (DN 65).

Table QW-452.5
Fillet-Weld Test (19)

Type of Joint	Thickness of Test Coupon as Welded, in. (mm)	Qualified Range	Type and Number of Tests Required [Figure QW-462.4(b) or Figure QW-462.4(c)]	
			Macro	Fracture
Tee fillet [Figure QW-462.4(b)]	3/16 (5) or greater	All base material thicknesses, fillet sizes, and diameters 2 7/8 (73) O.D. and over [Note (1)]	1	1
	Less than 3/16 (5)	*T* to 2 *T* base material thickness, *T* maximum fillet size, and all diameters 2 7/8 (73) O.D. and over [Note (1)]	1	1

GENERAL NOTE: Production assembly mockups may be substituted in accordance with QW-181.2.1.

NOTES:
(1) Test coupon prepared as shown in Figure QW-462.4(b) for plate or Figure QW-462.4(c) for pipe.
(2) 2 7/8 in. (73 mm) O.D. is considered the equivalent of NPS 2 1/2 (DN 65). For smaller diameter qualifications, refer to Table QW-452.4 or Table QW-452.6.

Copyrighted material licensed to Fermi National Laboratory by Clarivate Analytics (US) LLC, subscriptions.techstreet.com, downloaded on 2020-09-23 17:45:20 +0000 by Fermi National Laboratory User.
No further reproduction or distribution is permitted.

Table QW-452.6
Fillet Qualification by Groove-Weld Tests

Type of Joint	Thickness of Test Coupon as Welded, in. (mm)	Qualified Range	Type and Number of Tests Required
Any groove	All thicknesses	All base material thicknesses, fillet sizes, and diameters	Fillet welds are qualified when a welder or welding operator qualifies on a groove weld test

(19)

Table QW-453
Procedure and Performance Qualification Thickness Limits and Test Specimens for Hard-Facing (Wear-Resistant) and Corrosion-Resistant Overlays

Thickness of Test Coupon (*T*)	Corrosion-Resistant Overlay		Hard-facing Overlay (Wear-Resistant)	
	Nominal Base Metal Thickness Qualified (*T*)	Type and Number of Tests Required	Nominal Base Metal Thickness Qualified (*T*)	Type and Number of Tests Required
Procedure Qualification Testing				
Less than 1 in. (25 mm) *T*	*T* qualified to unlimited	Liquid penetrant 2 transverse side bend and 2 longitudinal side bend, or 4 transverse side bend	*T* qualified up to 1 in. (25 mm)	Liquid penetrant 3 hardness readings per specimen Macro test
1 in. (25 mm) and over *T*	1 in. (25 mm) to unlimited		1 in. (25 mm) to unlimited	
Performance Qualification Testing				
Less than 1 in. (25 mm) *T*	*T* qualified to unlimited	2 transverse side bend per position	*T* qualified to unlimited	Liquid penetrant Macro test
1 in. (25 mm) and over *T*	1 in. (25 mm) to unlimited		1 in. (25 mm) to unlimited	

Copyrighted material licensed to Fermi National Laboratory by Clarivate Analytics (US) LLC, subscriptions.techstreet.com, downloaded on 2020-09-23 17:45:20 +0000 by Fermi National Laboratory User.
No further reproduction or distribution is permitted.

QW-460 GRAPHICS

QW-461 POSITIONS

Figure QW-461.1
Positions of Welds — Groove Welds

Tabulation of Positions of Welds

Position	Diagram Reference	Inclination of Axis, deg	Rotation of Face, deg
Flat	A	0 to 15	150 to 210
Horizontal	B	0 to 15	80 to 150 210 to 280
Overhead	C	0 to 80	0 to 80 280 to 360
Vertical	D	15 to 80	80 to 280
	E	80 to 90	0 to 360

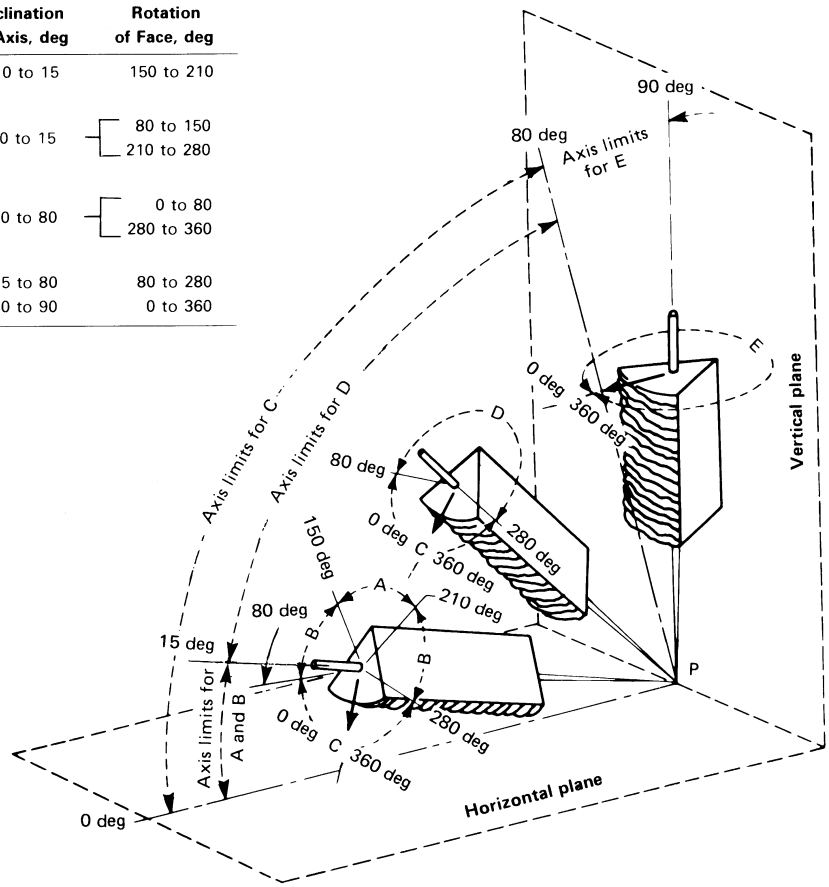

GENERAL NOTES:

(a) The horizontal reference plane is taken to lie always below the weld under consideration.

(b) Inclination of axis is measured from the horizontal reference plane toward the vertical.

(c) Angle of rotation of face is measured from a line perpendicular to the axis of the weld and lying in a vertical plane containing this axis. The reference position (0 deg) of rotation of the face invariably points in the direction opposite to that in which the axis angle increases. The angle of rotation of the face of weld is measured in a clockwise direction from this reference position (0 deg) when looking at point *P*.

Copyrighted material licensed to Fermi National Laboratory by Clarivate Analytics (US) LLC, subscriptions.techstreet.com, downloaded on 2020-09-23 17:45:20 +0000 by Fermi National Laboratory User.
No further reproduction or distribution is permitted.

Figure QW-461.2
Positions of Welds — Fillet Welds

Tabulation of Positions of Fillet Welds

Position	Diagram Reference	Inclination of Axis, deg	Rotation of Face, deg
Flat	A	0 to 15	150 to 210
Horizontal	B	0 to 15	125 to 150 210 to 235
Overhead	C	0 to 80	0 to 125 235 to 360
Vertical	D	15 to 80	125 to 235
	E	80 to 90	0 to 360

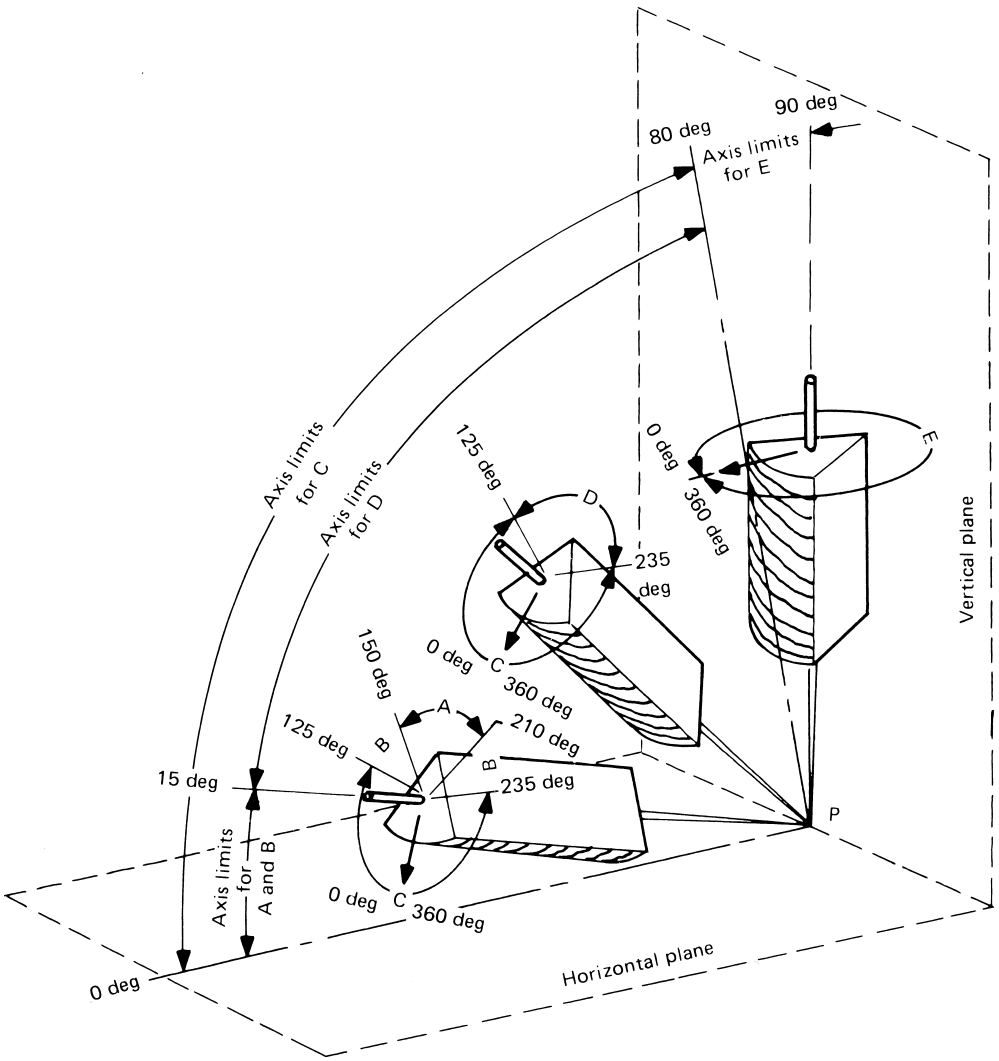

Copyrighted material licensed to Fermi National Laboratory by Clarivate Analytics (US) LLC, subscriptions.techstreet.com, downloaded on 2020-09-23 17:45:20 +0000 by Fermi National Laboratory User.
No further reproduction or distribution is permitted.

Figure QW-461.3
Groove Welds in Plate — Test Positions

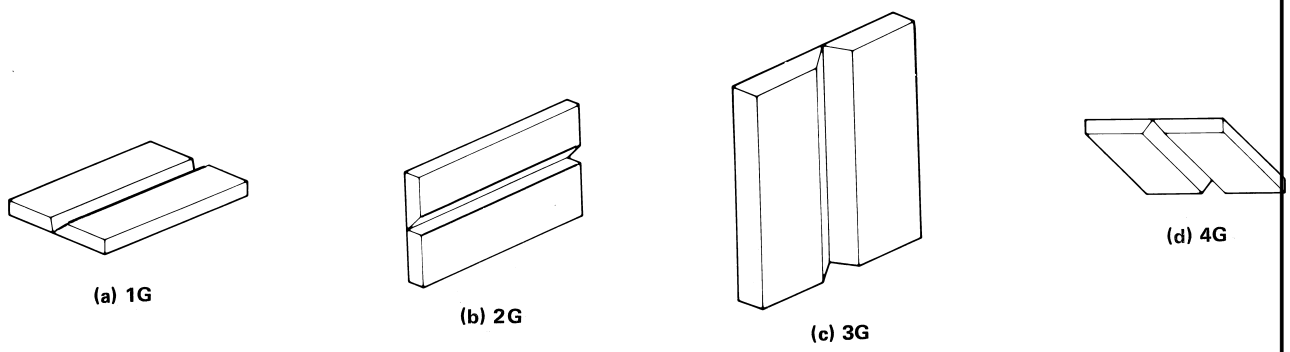

Figure QW-461.4
Groove Welds in Pipe — Test Positions

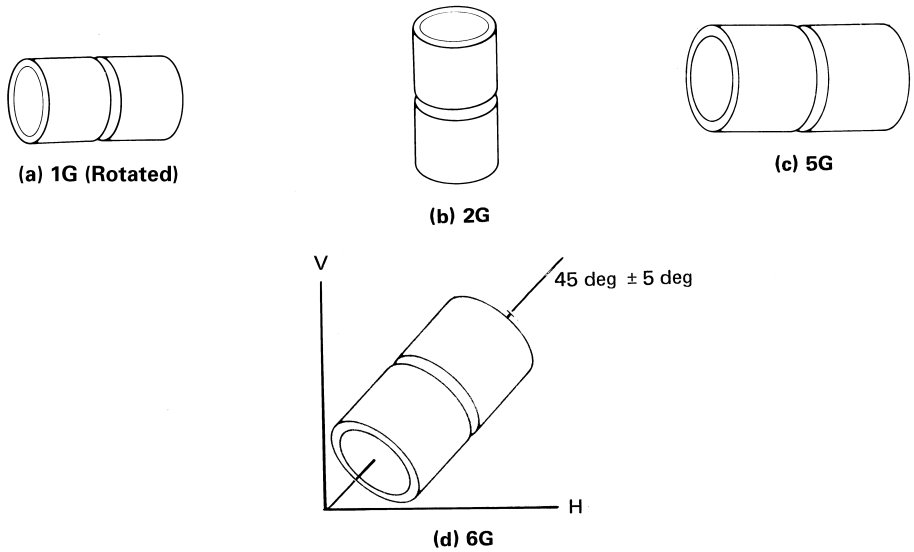

Copyrighted material licensed to Fermi National Laboratory by Clarivate Analytics (US) LLC, subscriptions.techstreet.com, downloaded on 2020-09-23 17:45:20 +0000 by Fermi National Laboratory User.
No further reproduction or distribution is permitted.

Figure QW-461.5
Fillet Welds in Plate — Test Positions

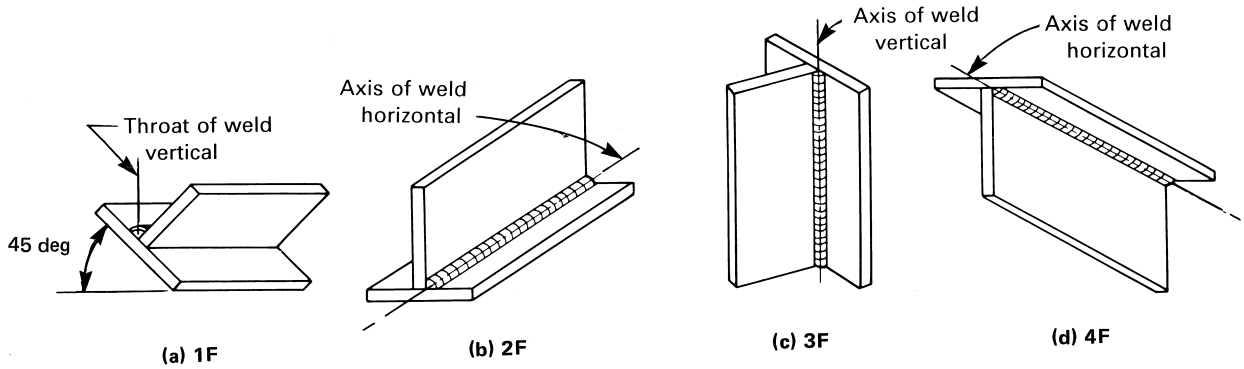

Copyrighted material licensed to Fermi National Laboratory by Clarivate Analytics (US) LLC, subscriptions.techstreet.com, downloaded on 2020-09-23 17:45:20 +0000 by Fermi National Laboratory User.
No further reproduction or distribution is permitted.

Figure QW-461.6
Fillet Welds in Pipe — Test Positions

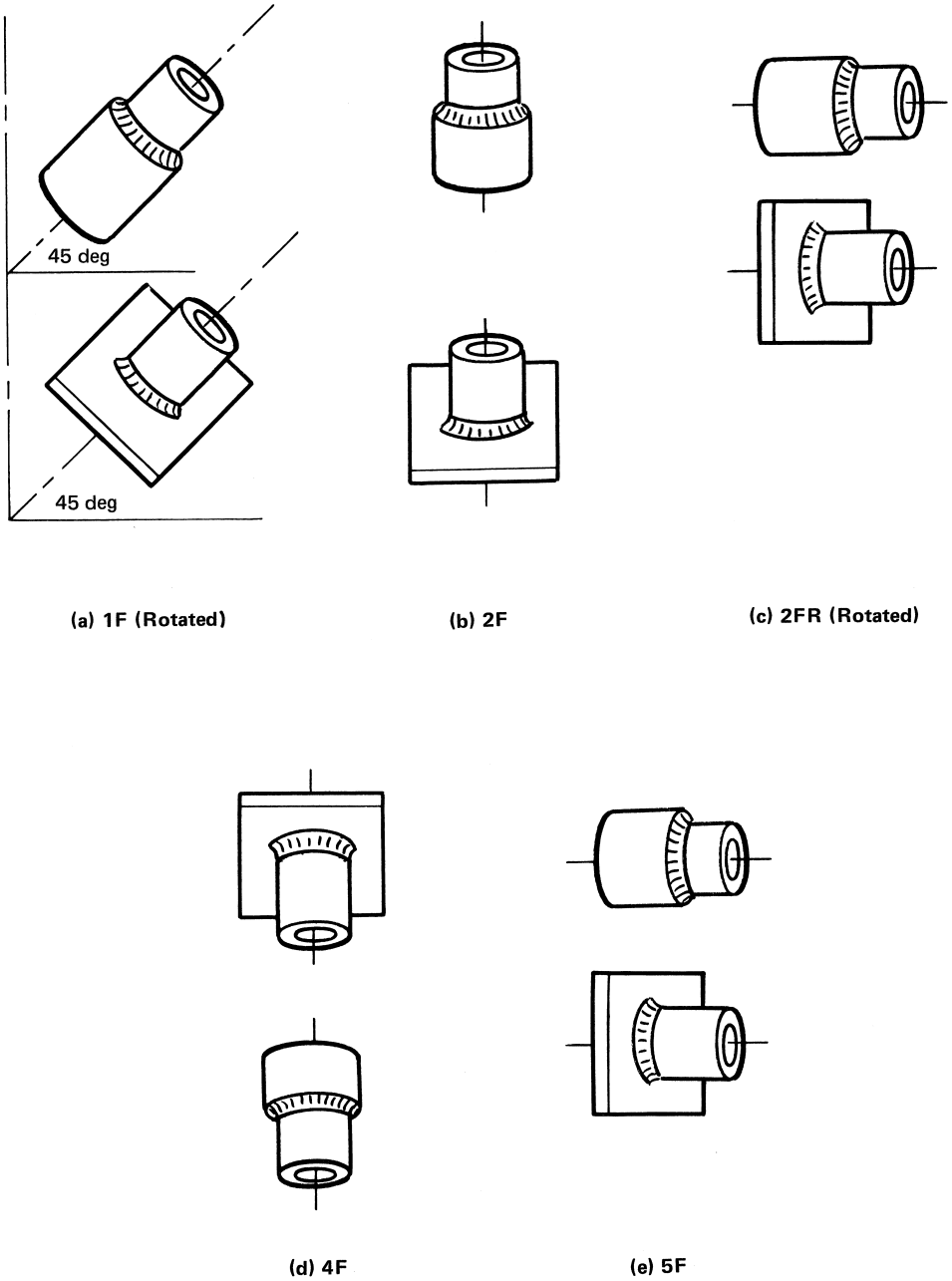

Copyrighted material licensed to Fermi National Laboratory by Clarivate Analytics (US) LLC, subscriptions.techstreet.com, downloaded on 2020-09-23 17:45:20 +0000 by Fermi National Laboratory User.
No further reproduction or distribution is permitted.

(19)

Figure QW-461.7
Stud Welds — Test Positions

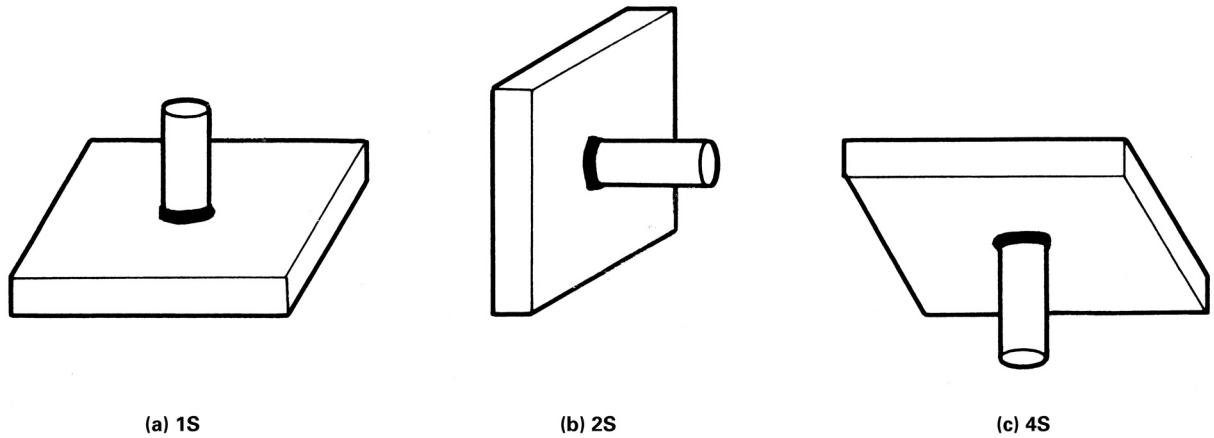

Figure QW-461.8
Stud Welds — Welding Positions

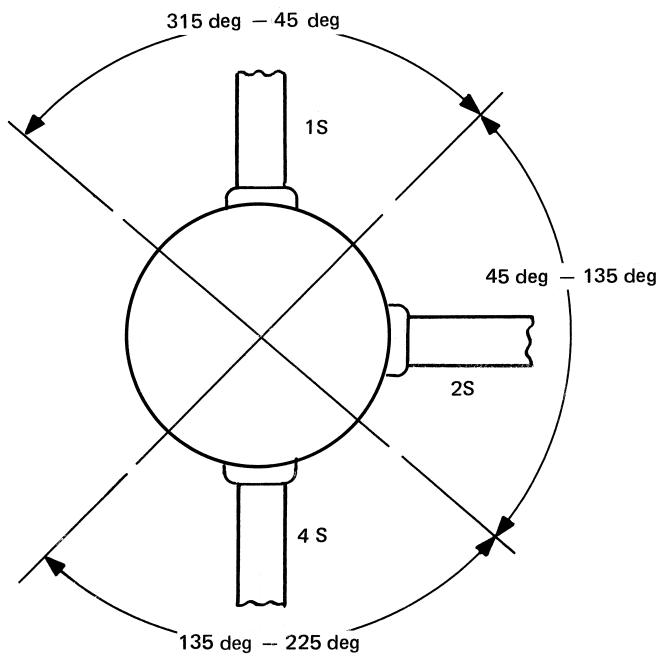

Copyrighted material licensed to Fermi National Laboratory by Clarivate Analytics (US) LLC, subscriptions.techstreet.com, downloaded on 2020-09-23 17:45:20 +0000 by Fermi National Laboratory User.
No further reproduction or distribution is permitted.

Table QW-461.9
Performance Qualification — Position and Diameter Limitations
(Within the Other Limitations of QW-303)

Qualification Test		Position and Type Weld Qualified [Note (1)]		
		Groove		Fillet or Tack [Note (2)]
Weld	Position	Plate and Pipe Over 24 in. (610 mm) O.D.	Pipe ≤ 24 in. (610 mm) O.D.	Plate and Pipe
Plate — Groove	1G	F	F [Note (3)]	F
	2G	F, H	F, H [Note (3)]	F, H
	3G	F, V	F [Note (3)]	F, H, V
	4G	F, O	F [Note (3)]	F, H, O
	3G and 4G	F, V, O	F [Note (3)]	All
	2G, 3G, and 4G	All	F, H [Note (3)]	All
	Special Positions (SP)	SP, F	SP, F	SP, F
Plate — Fillet	1F	...	...	F [Note (3)]
	2F	...	...	F, H [Note (3)]
	3F	...	...	F, H, V [Note (3)]
	4F	...	...	F, H, O [Note (3)]
	3F and 4F	...	...	All [Note (3)]
	Special Positions (SP)	...	...	SP, F [Note (3)]
Pipe — Groove [Note (4)]	1G	F	F	F
	2G	F, H	F, H	F, H
	5G	F, V, O	F, V, O	All
	6G	All	All	All
	2G and 5G	All	All	All
	Special Positions (SP)	SP, F	SP, F	SP, F
Pipe — Fillet [Note (4)]	1F	...	...	F
	2F	...	...	F, H
	2FR	...	...	F, H
	4F	...	...	F, H, O
	5F	...	...	All
	Special Positions (SP)	...	...	SP, F

NOTES:

(1) Positions of welding as shown in QW-461.1 and QW-461.2.

F = Flat
H = Horizontal
V = Vertical
O = Overhead
SP = Special Positions (see QW-303.3)

(2) Tack welds are not limited by pipe or tube diameters when their aggregate length does not exceed 25% of the weld circumference.

(3) Pipe $2\frac{7}{8}$ in. (73 mm) O.D. and over.

(4) See diameter restrictions in QW-452.3, QW-452.4, and QW-452.6.

Copyrighted material licensed to Fermi National Laboratory by Clarivate Analytics (US) LLC, subscriptions.techstreet.com, downloaded on 2020-09-23 17:45:20 +0000 by Fermi National Laboratory User.
No further reproduction or distribution is permitted.

Figure QW-461.10
Rotating Tool Design Characteristics (FSW) Referenced in QW-410

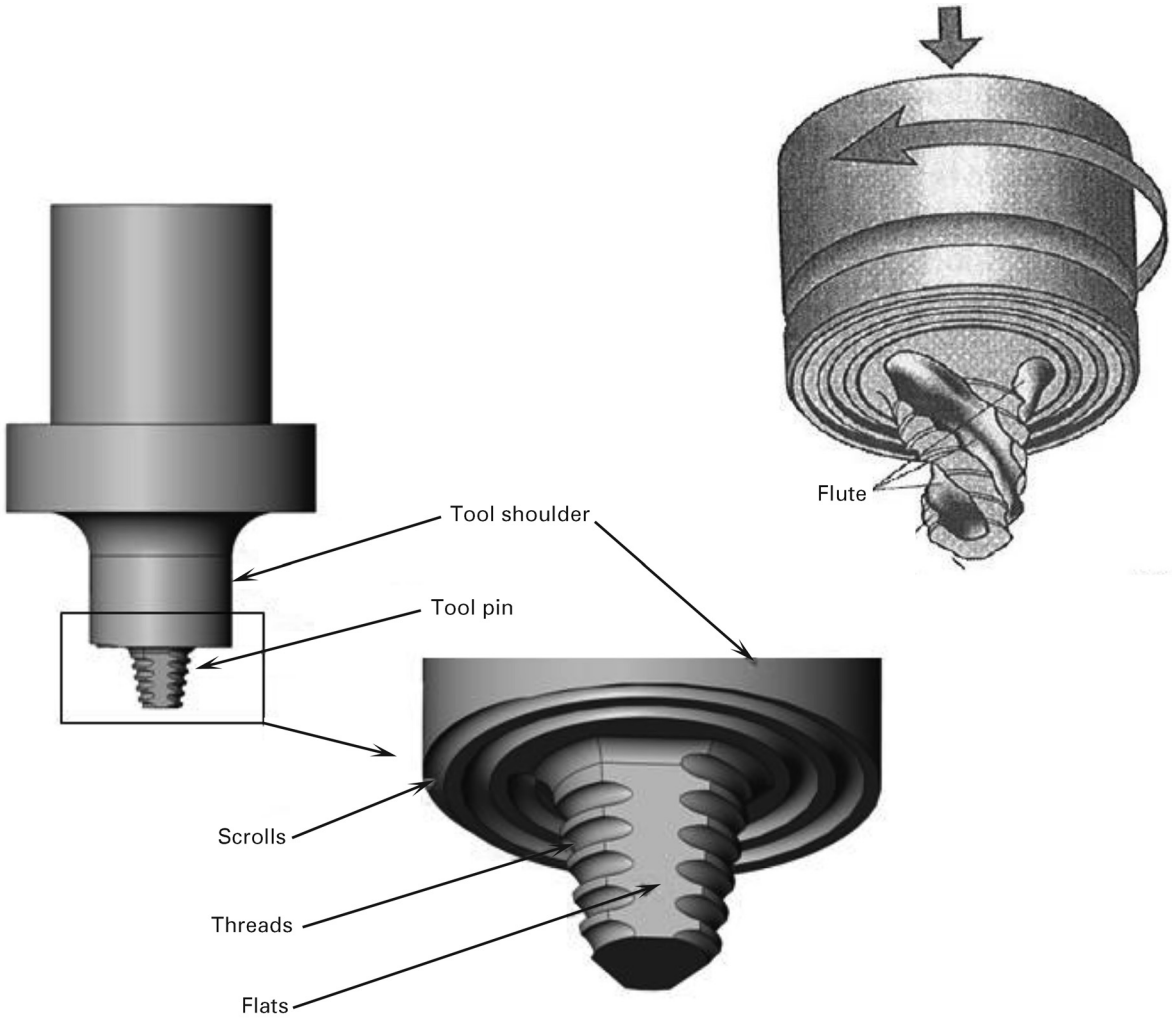

(19) **QW-462 TEST SPECIMENS**

The purpose of the QW-462 figures is to give the organization guidance in dimensioning test specimens for tests required for procedure and performance qualifications. Unless a minimum, maximum, or tolerance is given in the figures (or as QW-150, QW-160, or QW-180 requires), the dimensions are to be considered approximate. All welding processes and filler material to be qualified must be included in the test specimen.

The following nomenclature is in reference to Figures QW-462.1(a) through QW-462.1(e):

T = coupon thickness excluding reinforcement

W = specimen width, $^3/_4$ in. (19 mm)

x = coupon thickness including reinforcement

y = specimen thickness

As an alternative, any tension specimen dimensional geometry meeting the requirements of another welding qualification standard is acceptable as long as a cross section can be measured so that an ultimate tensile strength can be determined. All welding processes, filler materials, and heat-affected zones to be qualified shall be included in the test specimen. Weld reinforcement shall be removed prior to testing.

Copyrighted material licensed to Fermi National Laboratory by Clarivate Analytics (US) LLC, subscriptions.techstreet.com, downloaded on 2020-09-23 17:45:20 +0000 by Fermi National Laboratory User.
No further reproduction or distribution is permitted.

(**19**)

Figure QW-462.1(a)
Tension — Reduced Section — Plate

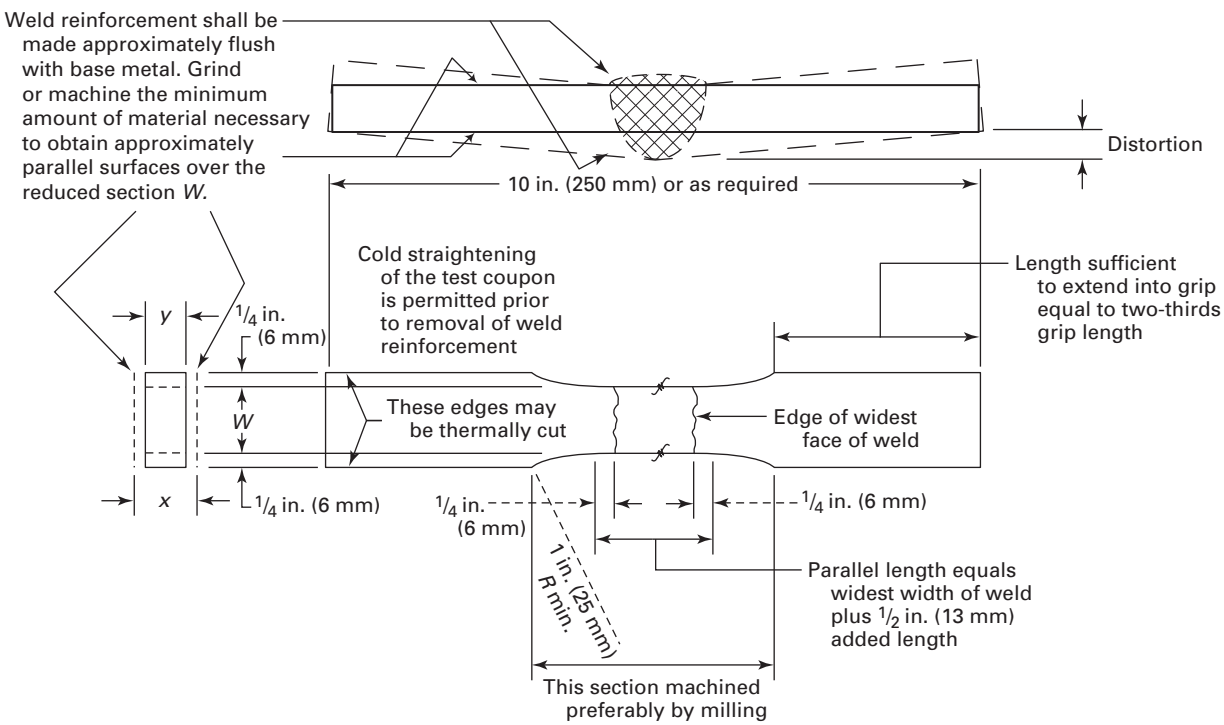

GENERAL NOTE: Specimens having a reduced section nominal width, *W*, that is greater than the nominal $^3/_4$-in. (19-mm) width may be used.

Figure QW-462.1(b)
Tension — Reduced Section — Pipe

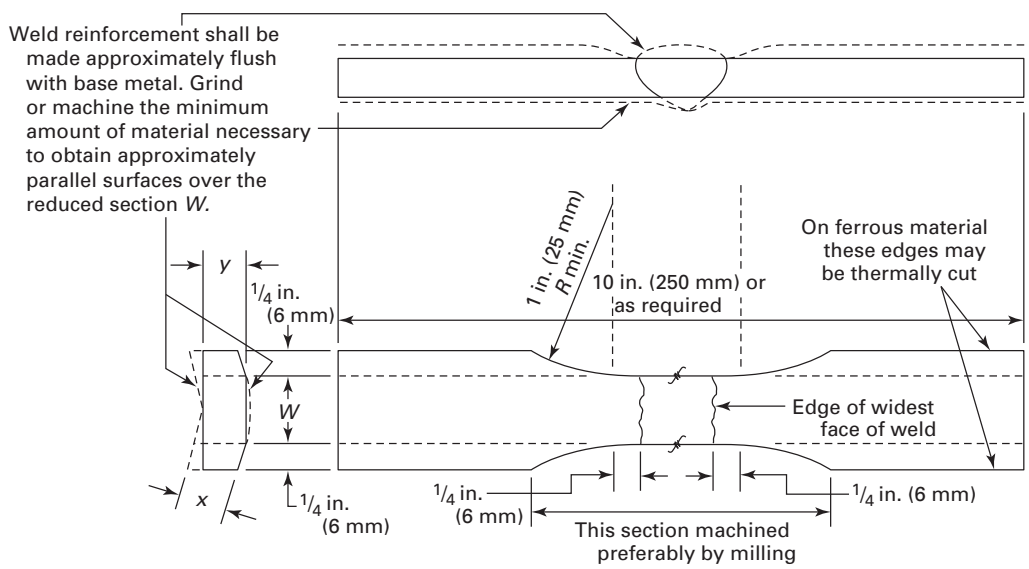

GENERAL NOTE: Specimens having a reduced section nominal width, *W*, that is greater than the nominal $^3/_4$ -in. (19-mm) width may be used.

Copyrighted material licensed to Fermi National Laboratory by Clarivate Analytics (US) LLC, subscriptions.techstreet.com, downloaded on 2020-09-23 17:45:20 +0000 by Fermi National Laboratory User.
No further reproduction or distribution is permitted.

Figure QW-462.1(c)
Tension — Reduced Section Alternate for Pipe

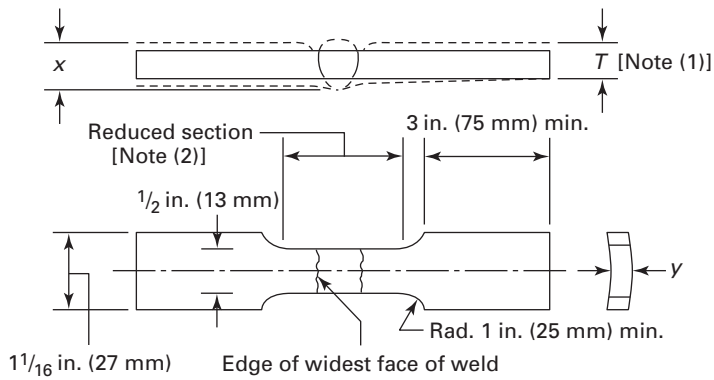

NOTES:
(1) The weld reinforcement shall be ground or machined so that the weld thickness does not exceed the base metal thickness T. Machine minimum amount to obtain approximately parallel surfaces.
(2) The reduced section shall not be less than the width of the weld plus $2y$.

Figure QW-462.1(d)
Tension — Reduced Section — Turned Specimens

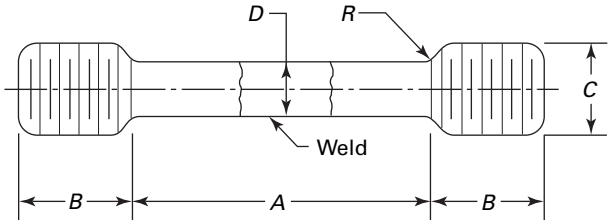

	Standard Dimensions, in. (mm)			
	(a) 0.505 Specimen	(b) 0.353 Specimen	(c) 0.252 Specimen	(d) 0.188 Specimen
A – Length of reduced section	[Note (1)]	[Note (1)]	[Note (1)]	[Note (1)]
D – Diameter	0.500 ± 0.010 (12.7 ± 0.25)	0.350 ± 0.007 (8.89 ± 0.18)	0.250 ± 0.005 (6.35 ± 0.13)	0.188 ± 0.003 (4.78 ± 0.08)
R – Radius of fillet	3/8 (10) min.	1/4 (6) min.	3/16 (5) min.	1/8 (3) min.
B – Length of end section	1 3/8 (35) approx.	1 1/8 (29) approx.	7/8 (22) approx.	1/2 (13) approx.
C – Diameter of end section	3/4 (19)	1/2 (13)	3/8 (10)	1/4 (6)

GENERAL NOTES:
(a) Use maximum diameter specimen (a), (b), (c), or (d) that can be cut from the section.
(b) Weld should be in center of reduced section.
(c) Where only a single coupon is required, the center of the specimen should be midway between the surfaces.
(d) The ends may be of any shape to fit the holders of the testing machine in such a way that the load is applied axially.
(e) When the diameter, D, of the reduced section is measured and the actual value is used to calculate the tensile stress, specimens of nominal diameters other than those shown above may be used.

NOTE:
(1) Reduced section A should not be less than width of weld plus $2D$.

Copyrighted material licensed to Fermi National Laboratory by Clarivate Analytics (US) LLC, subscriptions.techstreet.com, downloaded on 2020-09-23 17:45:20 +0000 by Fermi National Laboratory User.
No further reproduction or distribution is permitted.

Figure QW-462.1(e)
Tension — Full Section — Small Diameter Pipe

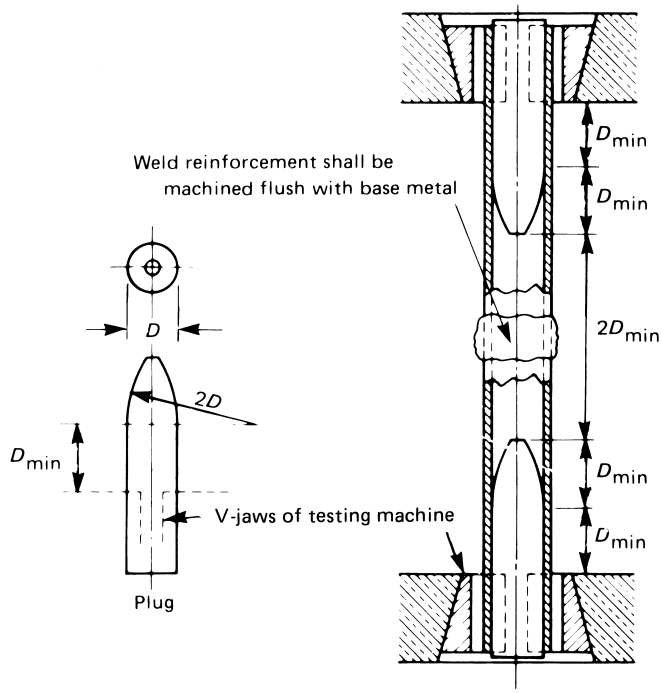

Copyrighted material licensed to Fermi National Laboratory by Clarivate Analytics (US) LLC, subscriptions.techstreet.com, downloaded on 2020-09-23 17:45:20 +0000 by Fermi National Laboratory User.
No further reproduction or distribution is permitted.

Figure QW-462.2
Side Bend

(1a) For procedure qualification of materials other than P-No. 1 in Table QW/QB-422 if the surfaces of the side-bend test specimens are gas cut, removal by machining or grinding of not less than $^1/_8$ in. (3 mm) from the surface shall be required.

(1b) Such removal is not required for P-No. 1 materials, but any resulting roughness shall be dressed by machining or grinding.

(2) For performance qualification of all materials in Table QW/QB-422, if the surfaces of side-bend tests are gas cut, any resulting roughness shall be dressed by machining or grinding.

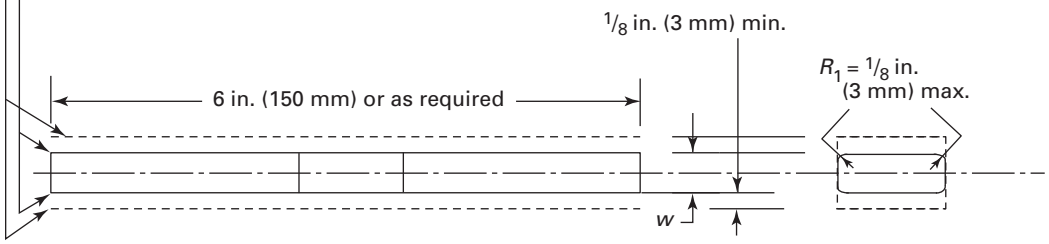

T, in. (mm)	*y*, in. (mm)	*w*, in. (mm)	
		P-No. 23, F-No. 23, F-No. 26, or P-No. 35	All other metals
$^3/_8$ to < $1^1/_2$ (10 to < 38)	*T* [Note (1)]	$^1/_8$ (3)	$^3/_8$ (10)
⩾ $1^1/_2$ (⩾ 38)	Notes (1) and (2)	$^1/_8$ (3)	$^3/_8$ (10)

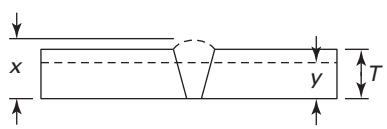

GENERAL NOTE: Weld reinforcement and backing strip or backing ring, if any, may be removed flush with the surface of the specimen. Thermal cutting, machining, or grinding may be employed. Cold straightening is permitted prior to removal of the reinforcement.

NOTES:
(1) When weld deposit t is less than coupon thickness T, side-bend specimen thickness may be t.
(2) When coupon thickness T equals or exceeds $1^1/_2$ in. (38 mm), use one of the following:
(a) Cut specimen into multiple test specimens of thickness y of approximately equal dimensions $^3/_4$ in. to $1^1/_2$ in. (19 mm to 38 mm).

y = tested specimen thickness when multiple specimens are taken from one coupon.

(b) The specimen may be bent at full width. See requirements on jig width in QW-466.1.

Copyrighted material licensed to Fermi National Laboratory by Clarivate Analytics (US) LLC, subscriptions.techstreet.com, downloaded on 2020-09-23 17:45:20 +0000 by Fermi National Laboratory User.
No further reproduction or distribution is permitted.

Figure QW-462.3(a)
Face and Root Bends — Transverse

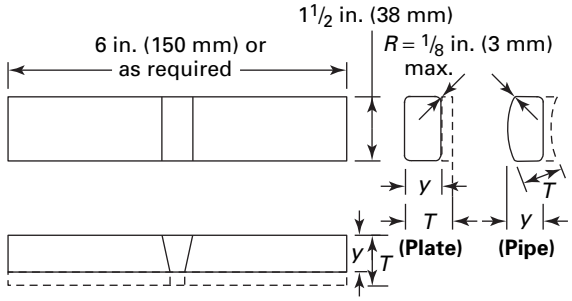

Face-Bend Specimen — Plate and Pipe

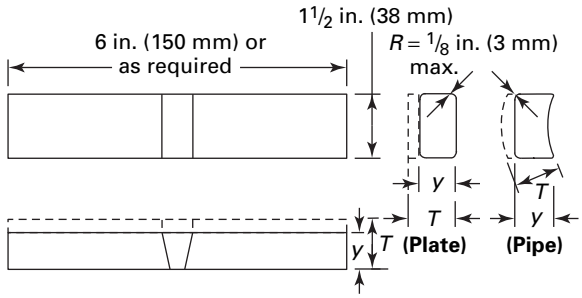

Root-Bend Specimen — Plate and Pipe

	Y, in. (mm)	
T, in. (mm)	P-No. 23, F-No. 23, F-No. 26, or P-No. 35	All Other Metals
1/16 < 1/8 (1.5 < 3)	*T*	*T*
1/8 – 3/8 (3 – 10)	1/8 (3)	*T*
>3/8 (10)	1/8 (3)	3/8 (10)

GENERAL NOTES:

(a) Weld reinforcement and backing strip or backing ring, if any, may be removed flush with the surface of the specimen. If a recessed ring is used, this surface of the specimen may be machined to a depth not exceeding the depth of the recess to remove the ring, except that in such cases the thickness of the finished specimen shall be that specified above. Do not flame-cut nonferrous material.

(b) If the pipe being tested has a diameter of NPS 4 (DN 100) or less, the width of the bend specimen may be 3/4 in. (19 mm) for pipe diameters NPS 2 (DN 50) to and including NPS 4 (DN 100). The bend specimen width may be 3/8 in. (10 mm) for pipe diameters less than NPS 2 (DN 50) down to and including NPS 3/8 (DN 10) and as an alternative, if the pipe being tested is equal to or less than NPS 1 (DN 25) pipe size, the width of the bend specimens may be that obtained by cutting the pipe into quarter sections, less an allowance for saw cuts or machine cutting. These specimens cut into quarter sections are not required to have one surface machined flat as shown in QW-462.3(a). Bend specimens taken from tubing of comparable sizes may be handled in a similar manner.

Copyrighted material licensed to Fermi National Laboratory by Clarivate Analytics (US) LLC, subscriptions.techstreet.com, downloaded on 2020-09-23 17:45:20 +0000 by Fermi National Laboratory User.
No further reproduction or distribution is permitted.

Figure QW-462.3(b)
Face and Root Bends — Longitudinal

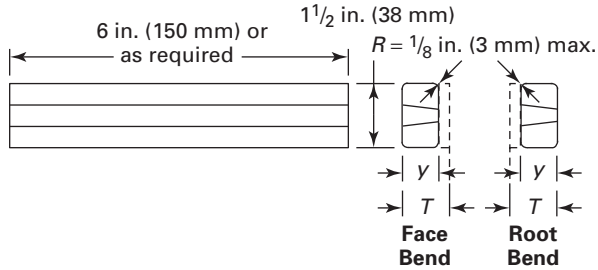

T, in. (mm)	Y, in. (mm) P-No. 23, F-No. 23, or P-No. 35	Y, in. (mm) All Other Metals
1/16 < 1/8 (1.5 < 3)	T	T
1/8 – 3/8 (3 – 10)	1/8 (3)	T
>3/8 (10)	1/8 (3)	3/8 (10)

GENERAL NOTE: Weld reinforcements and backing strip or backing ring, if any, shall be removed essentially flush with the undisturbed surface of the base material. If a recessed strip is used, this surface of the specimen may be machined to a depth not exceeding the depth of the recess to remove the strip, except that in such cases the thickness of the finished specimen shall be that specified above.

Figure QW-462.4(a)
Fillet Welds in Plate — Procedure

T_1	T_2
1/8 in. (3 mm) and less	T_1
Over 1/8 in. (3 mm)	Equal to or less than T_1, but not less than 1/8 in. (3 mm)

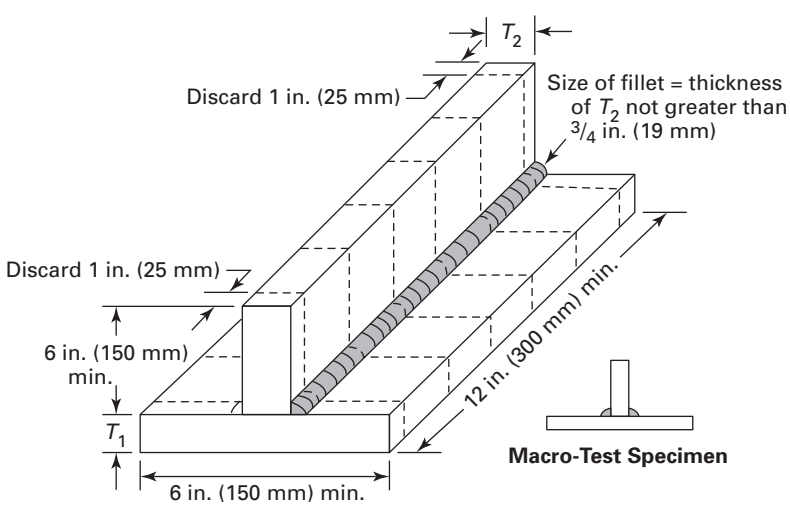

GENERAL NOTE: Macro test — the fillet shall show fusion at the root of the weld but not necessarily beyond the root. The weld metal and heat-affected zone shall be free of cracks.

Copyrighted material licensed to Fermi National Laboratory by Clarivate Analytics (US) LLC, subscriptions.techstreet.com, downloaded on 2020-09-23 17:45:20 +0000 by Fermi National Laboratory User.
No further reproduction or distribution is permitted.

Figure QW-462.4(b)
Fillet Welds in Plate — Performance

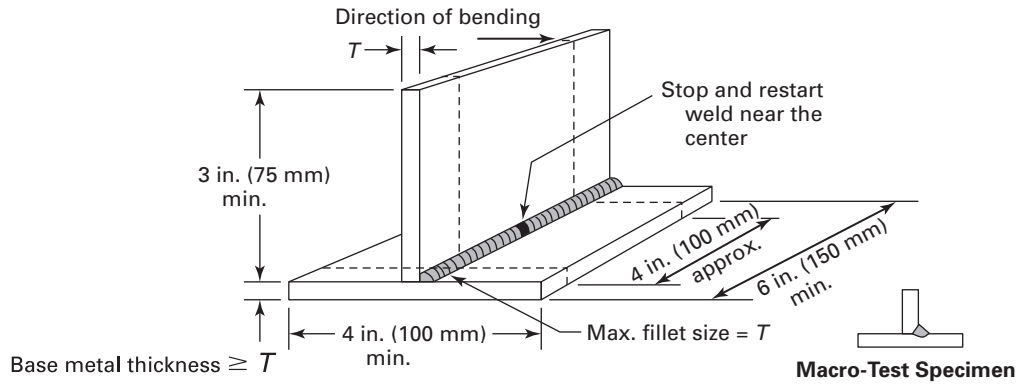

GENERAL NOTE: Refer to Table QW-452.5 for T thickness and qualification ranges.

Figure QW-462.4(c)
Fillet Welds in Pipe — Performance

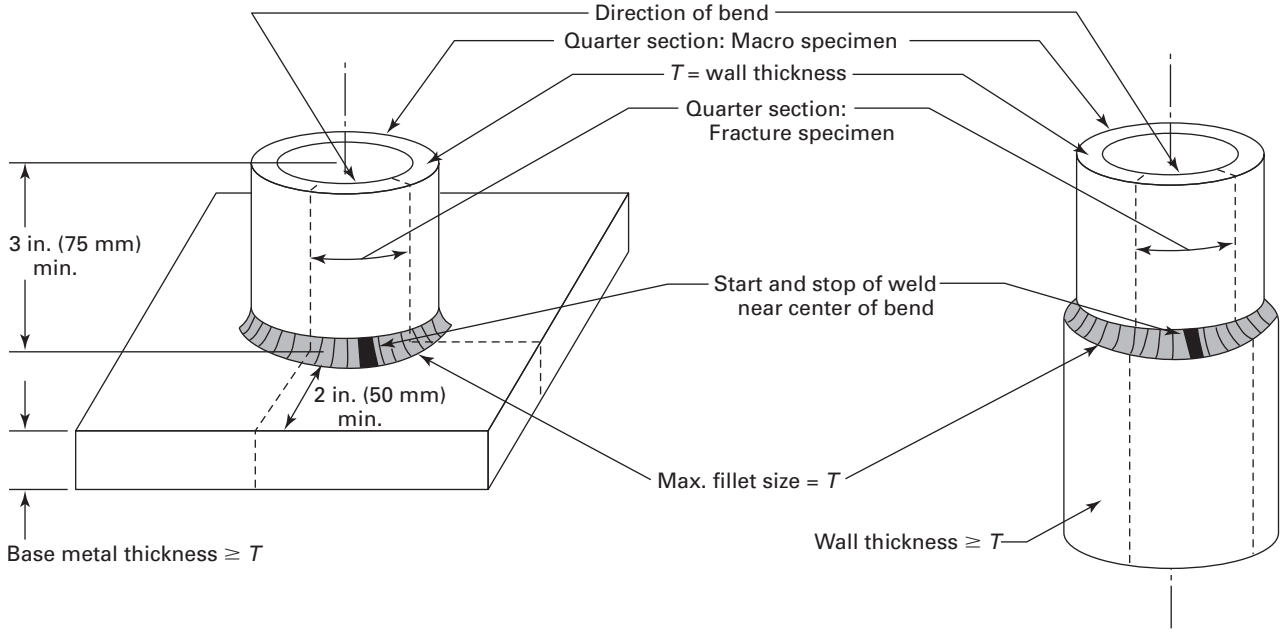

GENERAL NOTE: Either pipe-to-plate or pipe-to-pipe may be used as shown.

Copyrighted material licensed to Fermi National Laboratory by Clarivate Analytics (US) LLC, subscriptions.techstreet.com, downloaded on 2020-09-23 17:45:20 +0000 by Fermi National Laboratory User.
No further reproduction or distribution is permitted.

(19)

Figure QW-462.4(d)
Fillet Welds in Pipe — Procedure

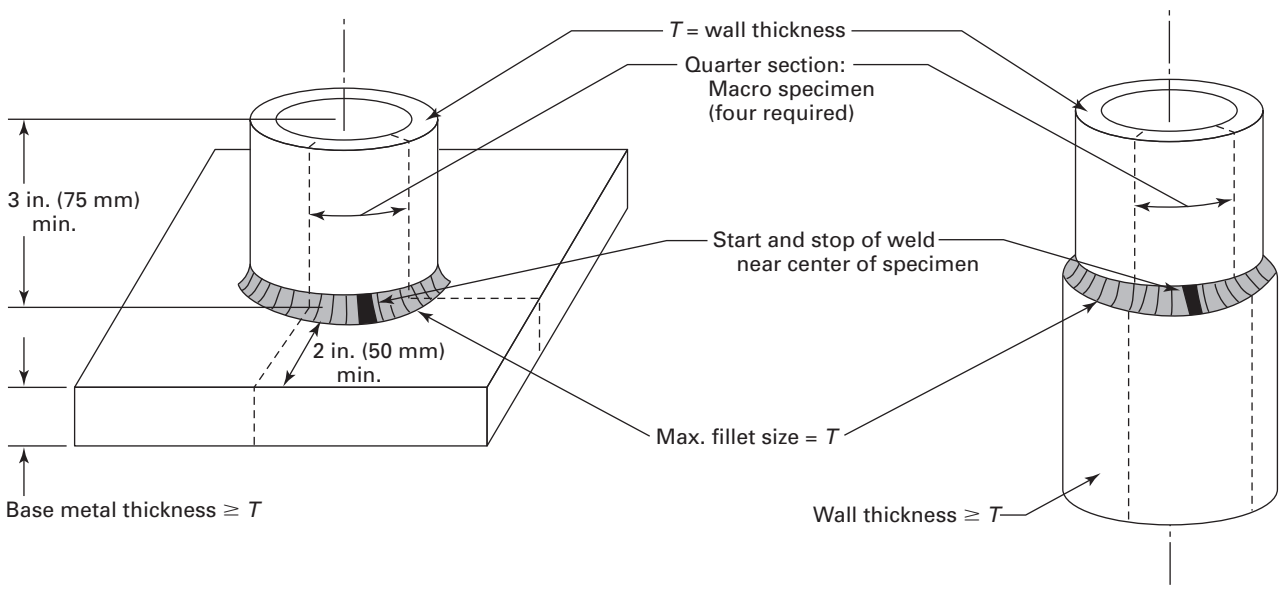

GENERAL NOTE: Either pipe-to-plate or pipe-to-pipe may be used as shown.

Figure QW-462.5(a)
Chemical Analysis and Hardness Specimen Corrosion-Resistant and Hard-Facing Weld Metal Overlay

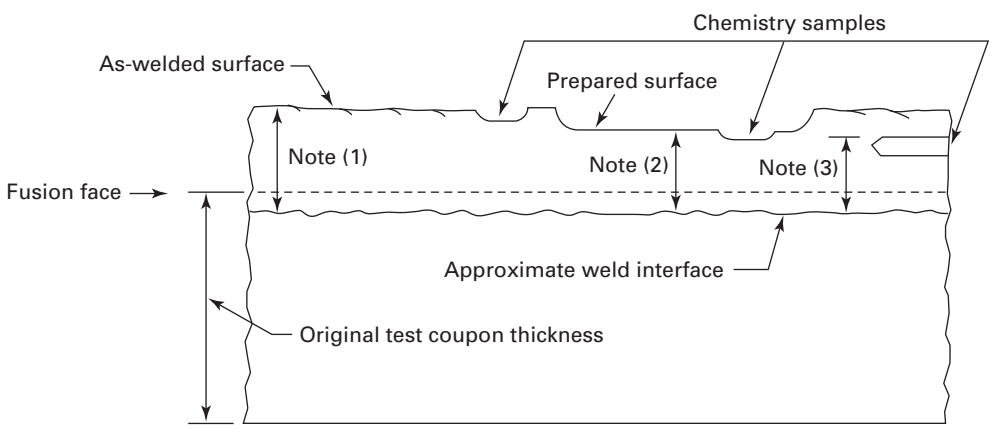

NOTES:

(1) When a chemical analysis or hardness test is conducted on the as-welded surface, the distance from the approximate weld interface to the final as-welded surface shall become the minimum qualified overlay thickness. The chemical analysis may be performed directly on the as-welded surface or on chips of material taken from the as-welded surface.

(2) When a chemical analysis or hardness test is conducted after material has been removed from the as-welded surface, the distance from the approximate weld interface to the prepared surface shall become the minimum qualified overlay thickness. The chemical analysis may be made directly on the prepared surface or from chips removed from the prepared surface.

(3) When a chemical analysis test is conducted on material removed by a horizontal drilled sample, the distance from the approximate weld interface to the uppermost side of the drilled cavity shall become the minimum qualified overlay thickness. The chemical analysis shall be performed on chips of material removed from the drilled cavity.

Copyrighted material licensed to Fermi National Laboratory by Clarivate Analytics (US) LLC, subscriptions.techstreet.com, downloaded on 2020-09-23 17:45:20 +0000 by Fermi National Laboratory User.
No further reproduction or distribution is permitted.

Figure QW-462.5(b)
Chemical Analysis Specimen, Hard-Facing Overlay Hardness, and Macro Test Location(s) for Corrosion-Resistant and Hard-Facing Weld Metal Overlay

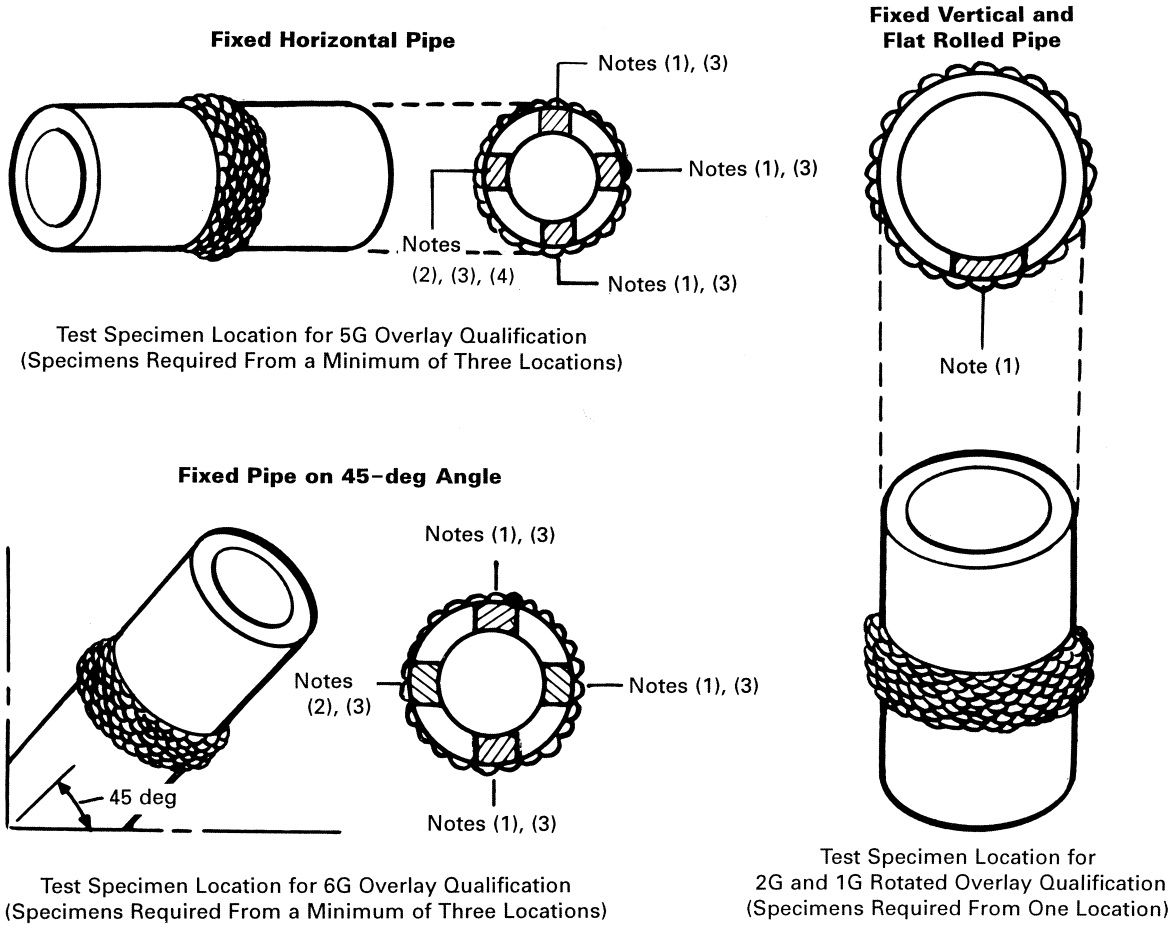

GENERAL NOTE: Overlay may be on the inside or outside of pipe.

NOTES:

(1) Location of required test specimen removal (Table QW-453). Refer to Figure QW-462.5(a) for chemical analysis and hardness test surface locations and minimum qualified thickness.

(2) Testing of circumferential hard-facing weld metal on pipe procedure qualification coupons may be limited to a single segment (completed utilizing the vertical, up-hill progression) for the chemical analysis, hardness, and macro-etch tests required in Table QW-453. Removal is required for a change from vertical down to vertical up-hill progression (but not vice-versa).

(3) Location of test specimens shall be in accordance with the angular position limitations of QW-120.

(4) When overlay welding is performed using machine or automatic welding and the vertical travel direction of adjacent weld beads is reversed on alternate passes, only one chemical analysis or hardness specimen is required to represent the vertical portion. Qualification is then restricted in production to require alternate pass reversal of rotation direction method.

Copyrighted material licensed to Fermi National Laboratory by Clarivate Analytics (US) LLC, subscriptions.techstreet.com, downloaded on 2020-09-23 17:45:20 +0000 by Fermi National Laboratory User.
No further reproduction or distribution is permitted.

Figure QW-462.5(c)
Pipe Bend Specimen — Corrosion-Resistant Weld Metal Overlay

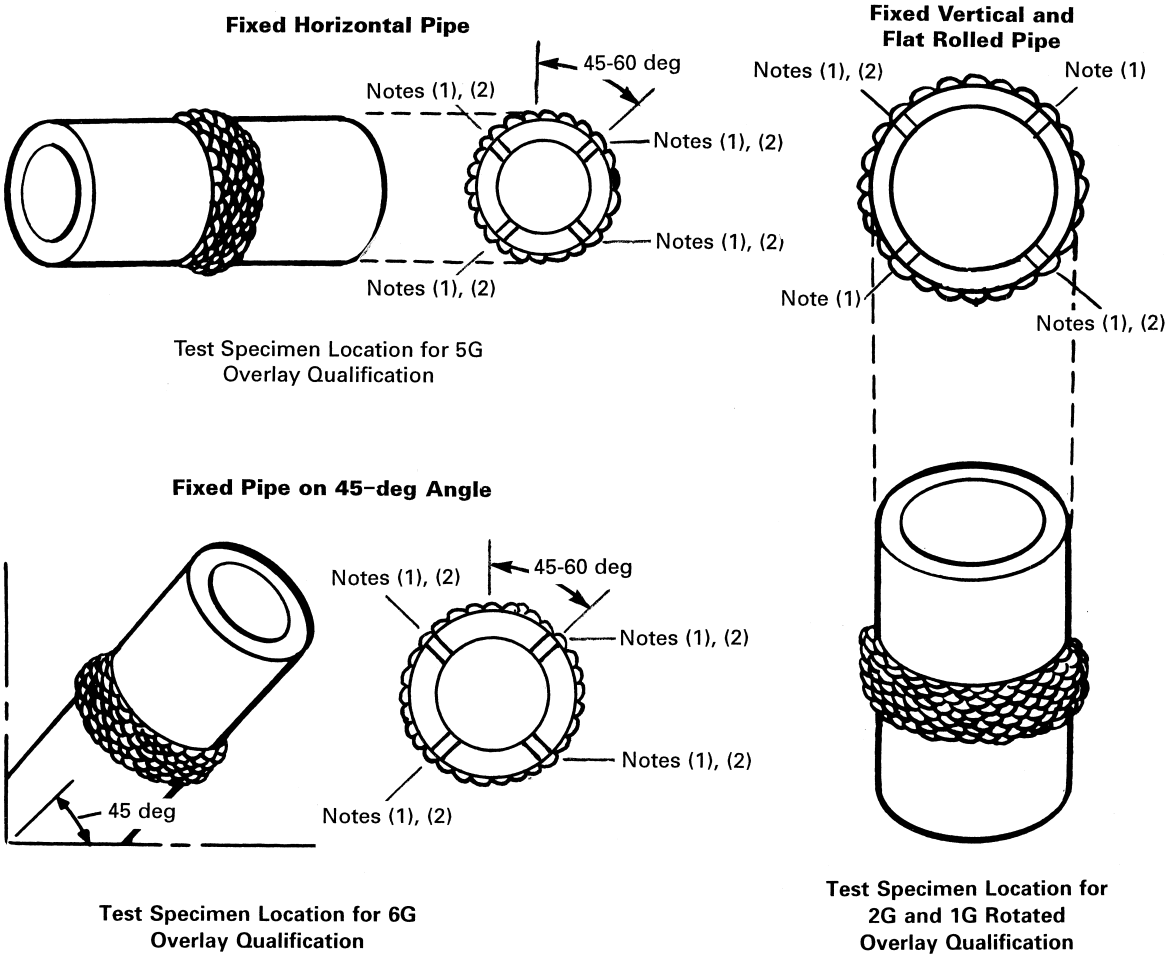

GENERAL NOTE: Overlay may be on the inside or outside of pipe.

NOTES:
(1) Location for required test specimen removal — Procedure (Table QW-453).
(2) Location for required test specimen removal — Performance (Table QW-453).

Copyrighted material licensed to Fermi National Laboratory by Clarivate Analytics (US) LLC, subscriptions.techstreet.com, downloaded on 2020-09-23 17:45:20 +0000 by Fermi National Laboratory User.
No further reproduction or distribution is permitted.

Figure QW-462.5(d)
Plate Bend Specimens — Corrosion-Resistant Weld Metal Overlay

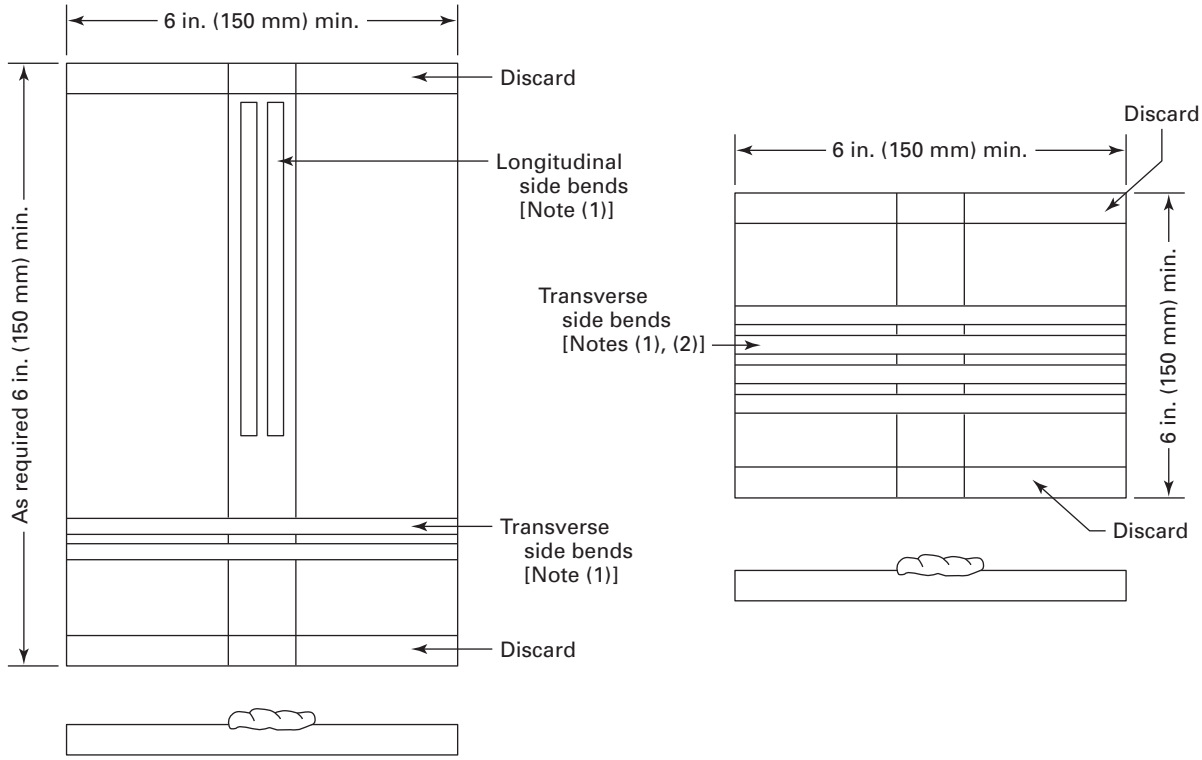

NOTES:
(1) Location for required test specimen removal — Procedure (Table QW-453). Four-side-bend test specimens are required for each position.
(2) Location for required test specimen removal — Performance (Table QW-453). Two-side-bend test specimens are required for each position.

Copyrighted material licensed to Fermi National Laboratory by Clarivate Analytics (US) LLC, subscriptions.techstreet.com, downloaded on 2020-09-23 17:45:20 +0000 by Fermi National Laboratory User.
No further reproduction or distribution is permitted.

Figure QW-462.5(e)
Plate Macro, Hardness, and Chemical Analysis Specimens — Corrosion-Resistant and Hard-Facing Weld Metal Overlay

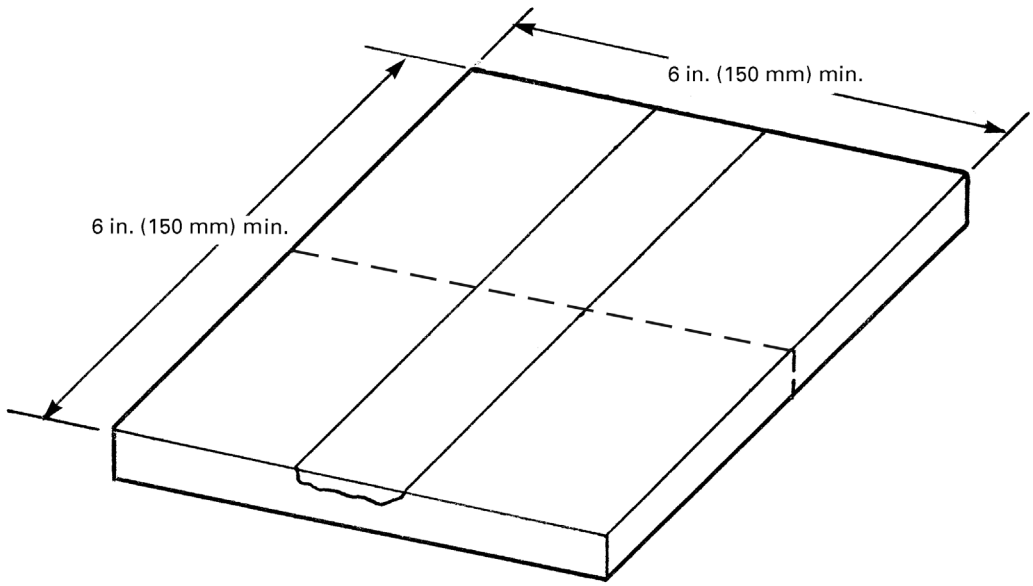

GENERAL NOTES:

(a) Location of required test specimen removal (Table QW-453). One required for each position. Refer to Figure QW-462.5(a) for chemical analysis and hardness test surface locations and minimum qualified thickness.

(b) Removal required for a change from vertical up to vertical down and vice versa.

Figure QW-462.7.1
Resistance Seam Weld Test Coupon

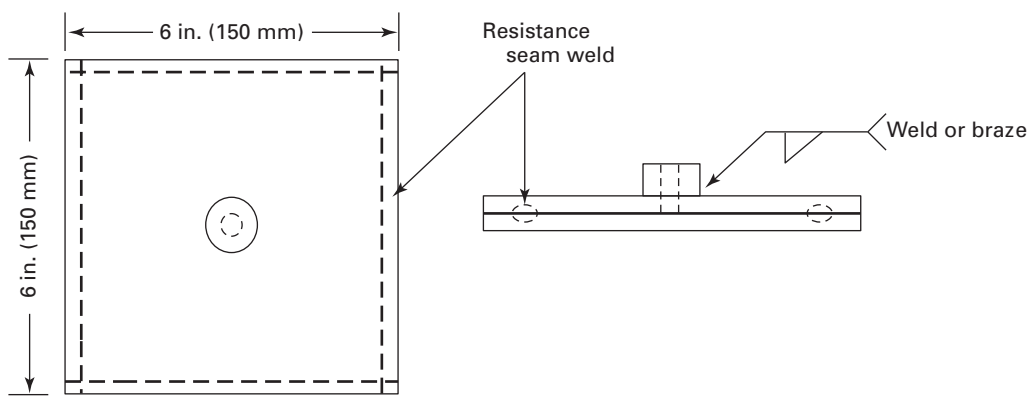

Copyrighted material licensed to Fermi National Laboratory by Clarivate Analytics (US) LLC, subscriptions.techstreet.com, downloaded on 2020-09-23 17:45:20 +0000 by Fermi National Laboratory User.
No further reproduction or distribution is permitted.

Figure QW-462.7.2
Seam Weld Section Specimen Removal

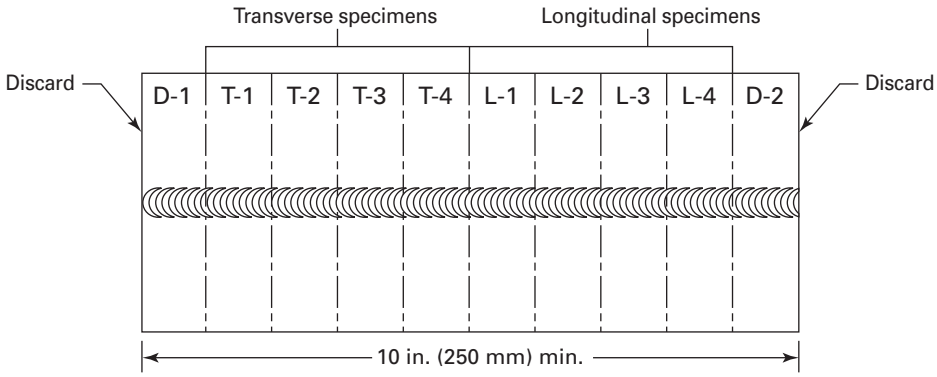

GENERAL NOTE: Mark the coupon into ten equal length specimens, label one end of the coupon D-1 the other end D-2. Cut the 10 in. (250 mm) coupon (transverse to the weld length) into pieces 5 in. (125 mm) long each.

(1) Transverse Weld Cross Section Instructions

(a) Cut five specimens each approximately 1 in. (25 mm) in length from the coupon labeled D-1 and discard the piece marked D-1.

(b) Mark the remaining four specimens T-1 through T-4, prepare the specimens as detailed in (2)(b)(-1) below for examination, adjacent faces at the cut shall not be used.

(2) Longitudinal Weld Cross Section Instructions

(a) Cut five specimens each approximately 1in. (25mm) in length from the coupon labeled D-2 and discard the piece marked D-2.

(b) Mark the remaining four specimens L-1 through L-4, cut the specimens at approximately $^1/_3$ of the weld width from the weld centerline through the length of each specimen in the longitudinal weld direction. Discard the four specimens containing approximately the $^1/_3$ weld width, the remaining four specimens containing approximately the $^2/_3$ weld width shall be prepared as detailed in (-1) below for examination.

(-1) The specimens shall be smoothed and etched with a suitable etchant (see QW-470) to give a clear definition to the weld metal and heat-affected zone.

Figure QW-462.7.3
Resistance Weld Nugget Section Test Specimens

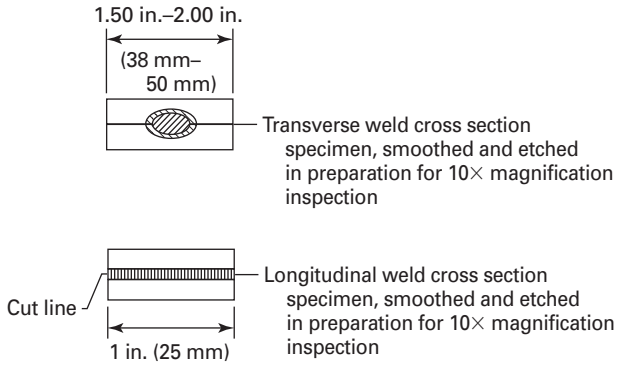

Copyrighted material licensed to Fermi National Laboratory by Clarivate Analytics (US) LLC, subscriptions.techstreet.com, downloaded on 2020-09-23 17:45:20 +0000 by Fermi National Laboratory User.
No further reproduction or distribution is permitted.

Figure QW-462.8.1
Spot Welds in Sheets

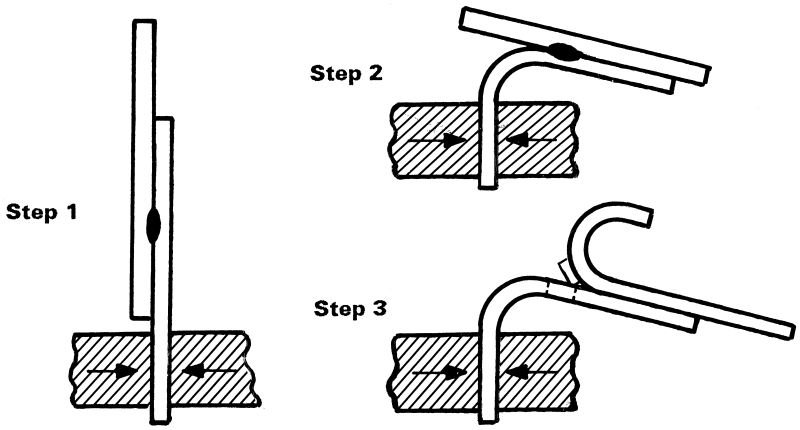

Peel Test

Step 1 - Grip in vise or other suitable device.
Step 2 - Bend specimen.
Step 3 - Peel pieces apart with pincers or other suitable tool.

Copyrighted material licensed to Fermi National Laboratory by Clarivate Analytics (US) LLC, subscriptions.techstreet.com, downloaded on 2020-09-23 17:45:20 +0000 by Fermi National Laboratory User.
No further reproduction or distribution is permitted.

Figure QW-462.8.2
Seam Weld Peel Test Specimen and Method

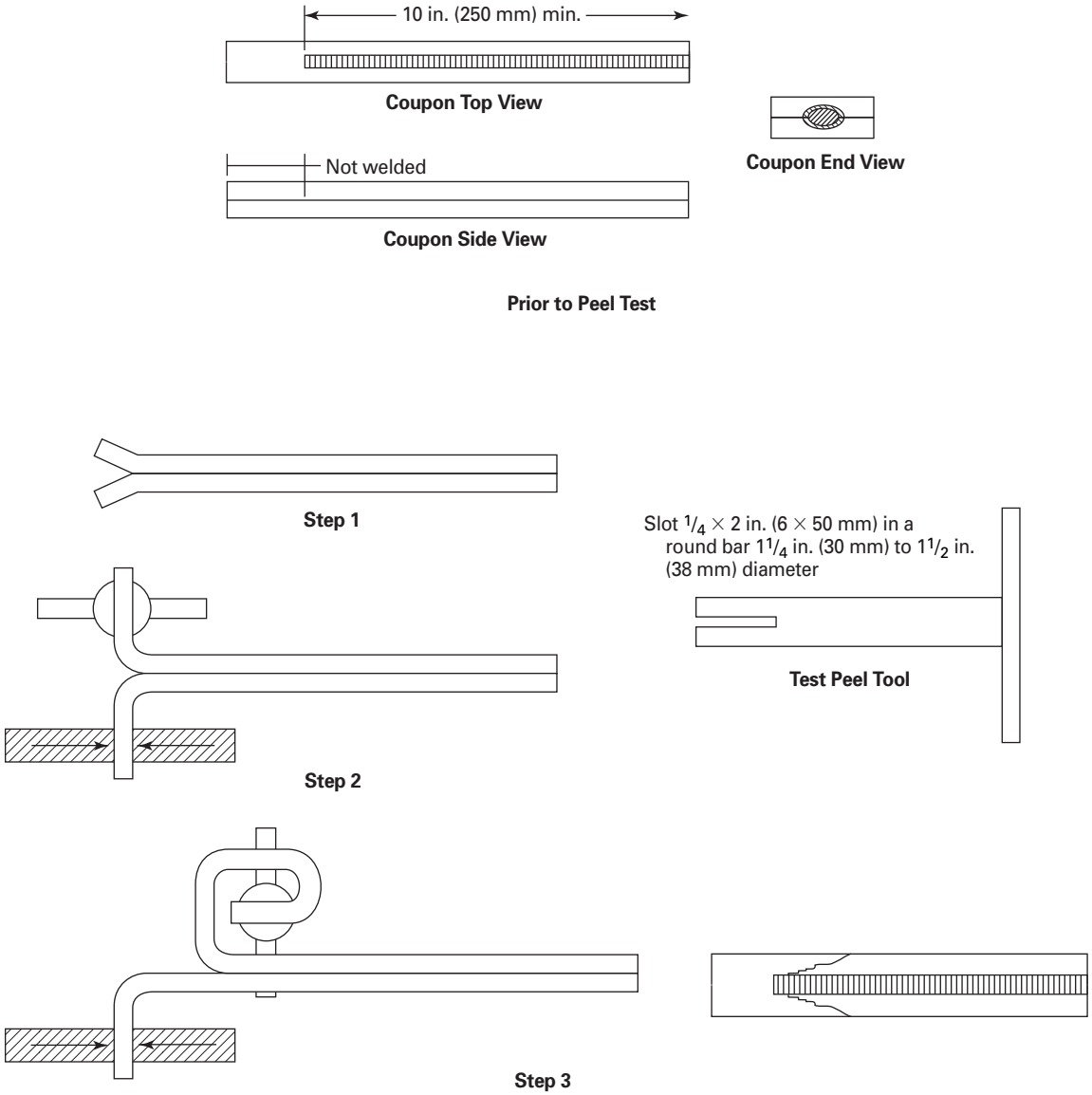

Peel Test
Step 1 — Separate coupon plies in nonwelded end.
Step 2 — Grip in vise or other suitable device, bend specimen.
Step 3 — Peel pieces apart with pincers or other suitable tool.

Copyrighted material licensed to Fermi National Laboratory by Clarivate Analytics (US) LLC, subscriptions.techstreet.com, downloaded on 2020-09-23 17:45:20 +0000 by Fermi National Laboratory User.
No further reproduction or distribution is permitted.

Figure QW-462.9
Spot Welds in Sheet

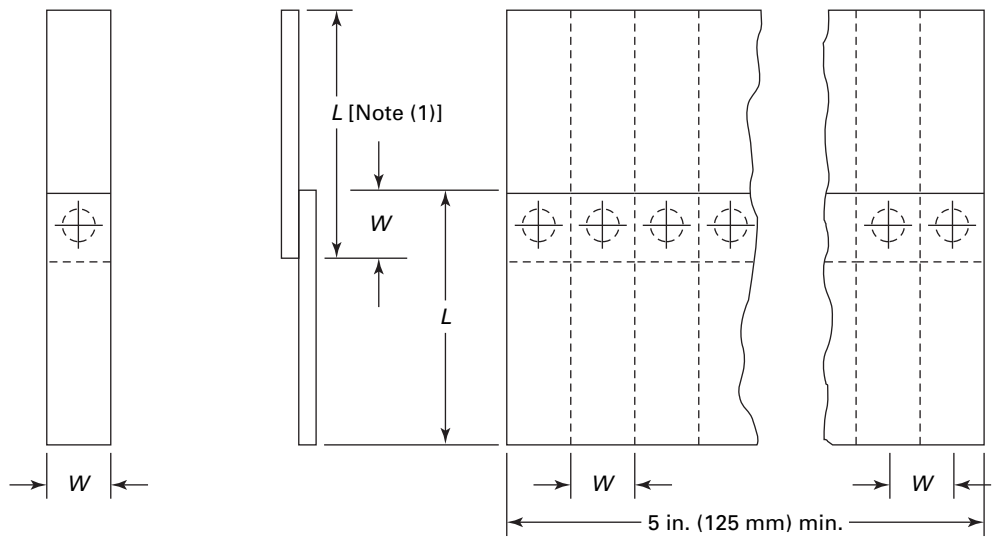

(a) Single Spot Shear Specimen

(b) Multiple Spot Shear Specimen [Note (2)]

Nominal Thickness of Thinner Sheet, in. (mm)	*W*, in. (mm) Min.
Over 0.008 to 0.030 (0.20 to 0.8)	0.68 (17)
Over 0.030 to 0.100 (0.8 to 2.5)	1.00 (25)
Over 0.100 to 0.130 (2.5 to 3)	1.25 (30)
Over 0.130 (3)	1.50 (38)

NOTES:
(1) L shall be not less than $4W$.
(2) Sketch (b) shall be made of 5 specimens or more.

Copyrighted material licensed to Fermi National Laboratory by Clarivate Analytics (US) LLC, subscriptions.techstreet.com, downloaded on 2020-09-23 17:45:20 +0000 by Fermi National Laboratory User.
No further reproduction or distribution is permitted.

Table QW-462.10(a)
Shear Strength Requirements for Spot or Projection Weld Specimens (19)

DELETED

Table QW-462.10(b)
Shear Strength Requirements for Spot or Projection Weld Specimens (19)

DELETED

Table QW-462.10(c)
Shear Strength Requirements for Spot or Projection Weld Specimens (19)

DELETED

Copyrighted material licensed to Fermi National Laboratory by Clarivate Analytics (US) LLC, subscriptions.techstreet.com, downloaded on 2020-09-23 17:45:20 +0000 by Fermi National Laboratory User.
No further reproduction or distribution is permitted.

Figure QW-462.12
Nomenclature for Temper Bead Welding

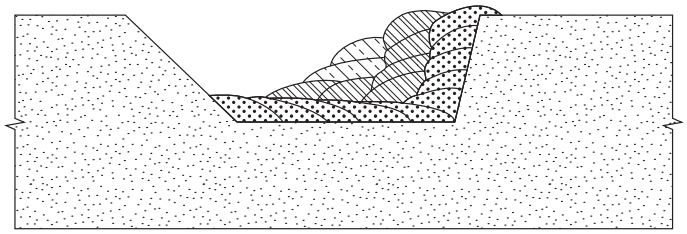

Partially Completed Partial-Penetration Weld

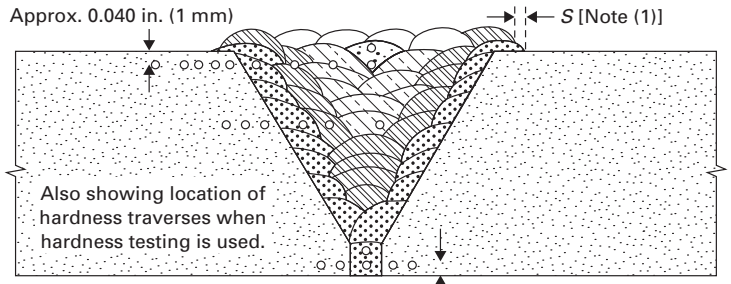

Typical Groove Weld

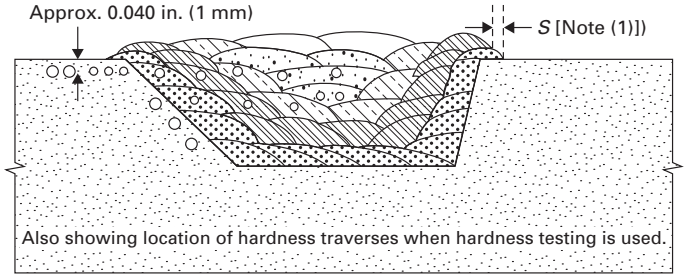

Completed Partial-Penetration Weld

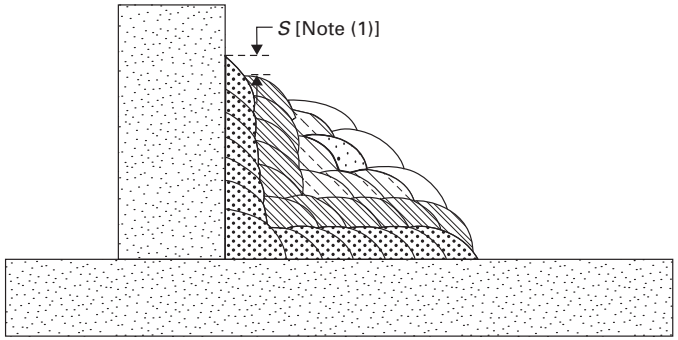

Typical Fillet Weld

LEGEND
See Note (2)

- Weld Beads Against Base Metal
- First Layer Tempering Beads
- Second Layer Tempering Beads
- Fill Weld Beads
- Surface Temper Weld Reinforcing Beads

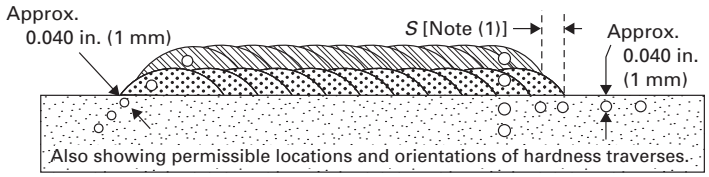

Overlay Weld

GENERAL NOTES:

(a) Weld beads shown above may be deposited in any sequence that will result in placement of the beads as shown.

(b) Surface temper reinforcing beads may cover the entire weld surface, or may only be placed at the toe of the weld; they may or may not be mechanically removed.

NOTES:

(1) The distance, S, is measured from the toe of the weld to the edge of the temper beads. Measurements shall be made parallel to the base metal surface.

(2) Beads near the finished surface may be both tempering beads and surface temper reinforcing beads.

Copyrighted material licensed to Fermi National Laboratory by Clarivate Analytics (US) LLC, subscriptions.techstreet.com, downloaded on 2020-09-23 17:45:20 +0000 by Fermi National Laboratory User.
No further reproduction or distribution is permitted.

Figure QW-462.13
Measurement of Temper Bead Overlap

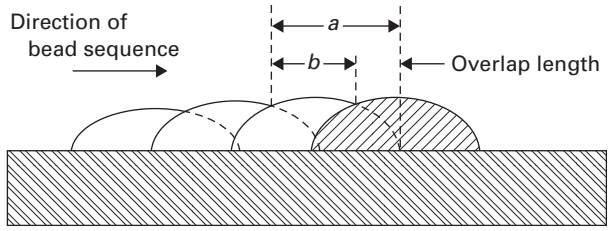

GENERAL NOTE: Measurement of bead overlap – % overlap length = $(a - b)/a \times 100\%$. In this figure, the shaded bead overlaps previous bead by 30% to 40%. The distance a is measured before the next bead is deposited.

Figure QW-463.1(a)
Plates — Less Than 3/4 in. (19 mm) Thickness Procedure Qualification

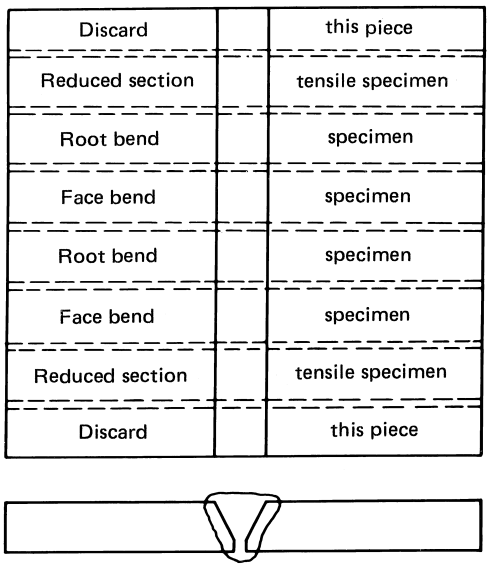

Figure QW-463.1(b)
Plates — 3/4 in. (19 mm) and Over Thickness and Alternate From 3/8 in. (10 mm) but Less Than 3/4 in. (19 mm) Thickness Procedure Qualification

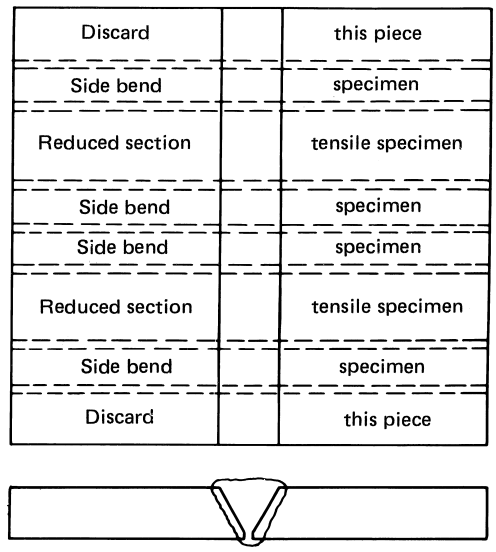

Copyrighted material licensed to Fermi National Laboratory by Clarivate Analytics (US) LLC, subscriptions.techstreet.com, downloaded on 2020-09-23 17:45:20 +0000 by Fermi National Laboratory User.
No further reproduction or distribution is permitted.

Figure QW-463.1(c)
Plates — Longitudinal Procedure Qualification

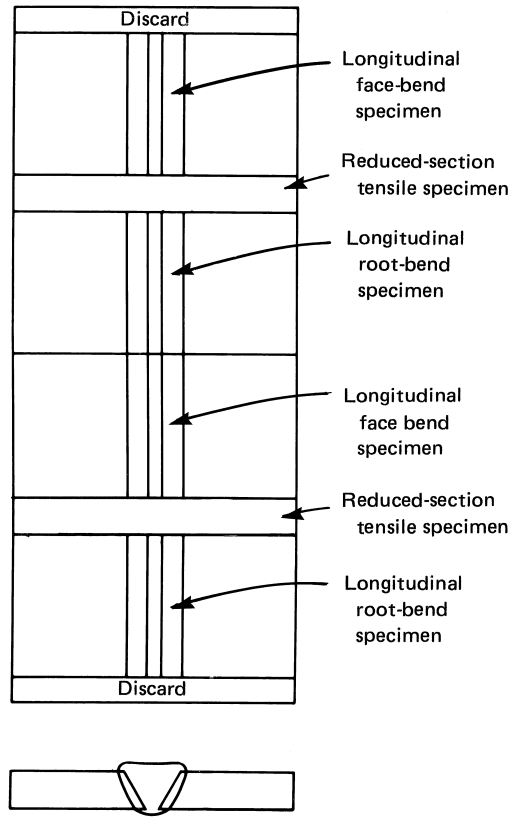

Figure QW-463.1(d)
Procedure Qualification

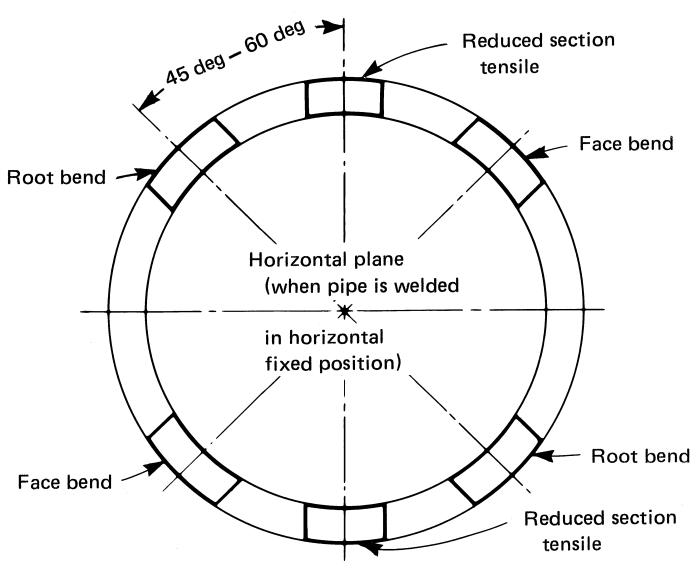

Copyrighted material licensed to Fermi National Laboratory by Clarivate Analytics (US) LLC, subscriptions.techstreet.com, downloaded on 2020-09-23 17:45:20 +0000 by Fermi National Laboratory User.
No further reproduction or distribution is permitted.

Figure QW-463.1(e)
Procedure Qualification

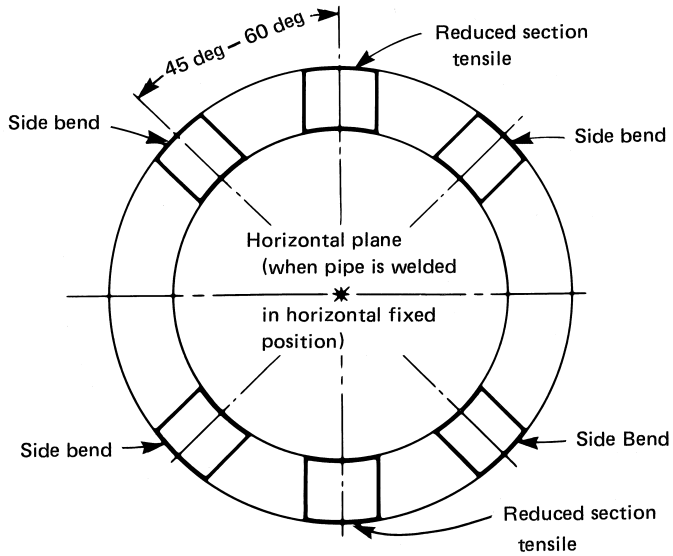

Figure QW-463.1(f)
Toughness Test Specimen Location

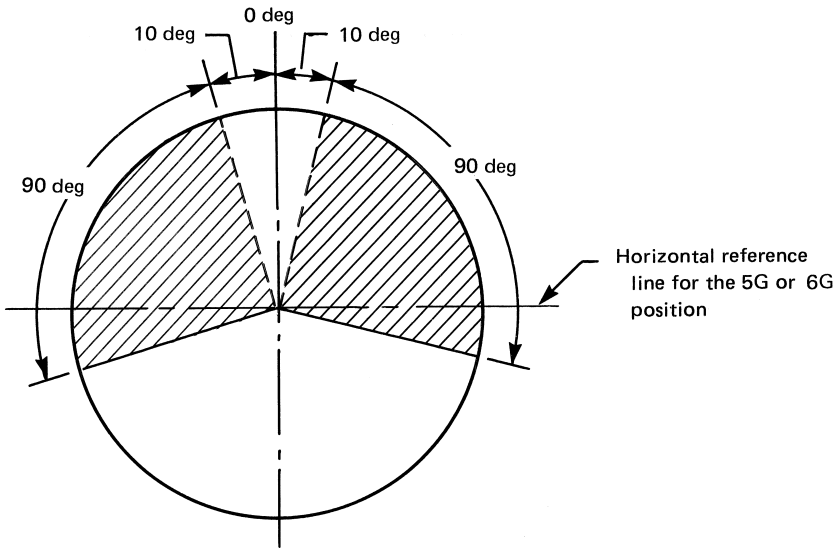

Copyrighted material licensed to Fermi National Laboratory by Clarivate Analytics (US) LLC, subscriptions.techstreet.com, downloaded on 2020-09-23 17:45:20 +0000 by Fermi National Laboratory User.
No further reproduction or distribution is permitted.

Figure QW-463.2(a)
Plates — Less Than 3/4 in. (19 mm) Thickness Performance Qualification

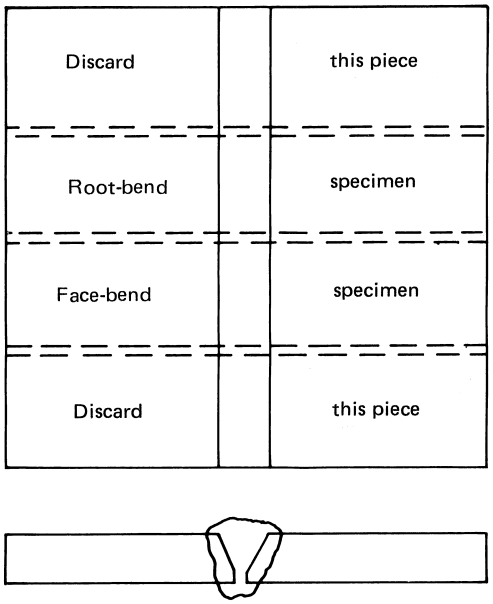

Figure QW-463.2(b)
Plates — 3/4 in. (19 mm) and Over Thickness and Alternate From 3/8 in. (10 mm) but Less Than 3/4 in. (19 mm) Thickness Performance Qualification

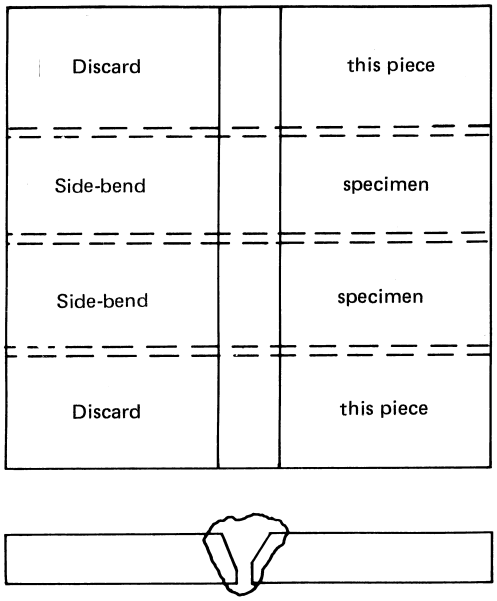

Copyrighted material licensed to Fermi National Laboratory by Clarivate Analytics (US) LLC, subscriptions.techstreet.com, downloaded on 2020-09-23 17:45:20 +0000 by Fermi National Laboratory User.
No further reproduction or distribution is permitted.

Figure QW-463.2(c)
Plates — Longitudinal Performance Qualification

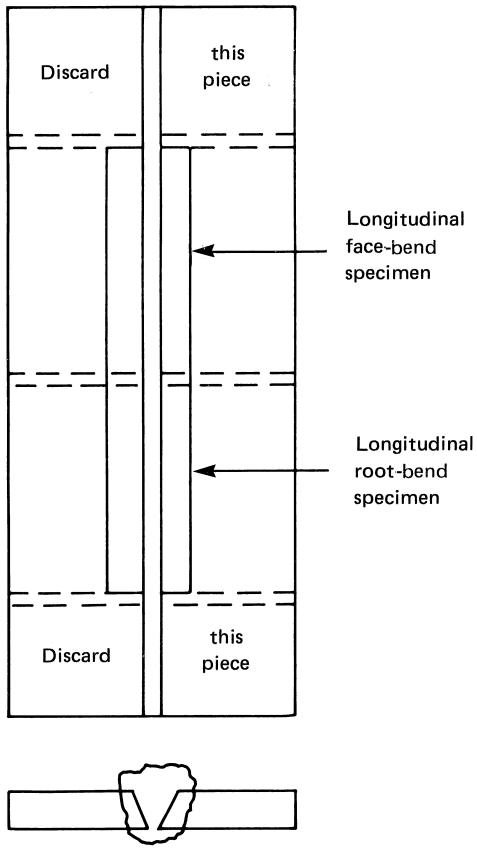

Figure QW-463.2(d)
Performance Qualification

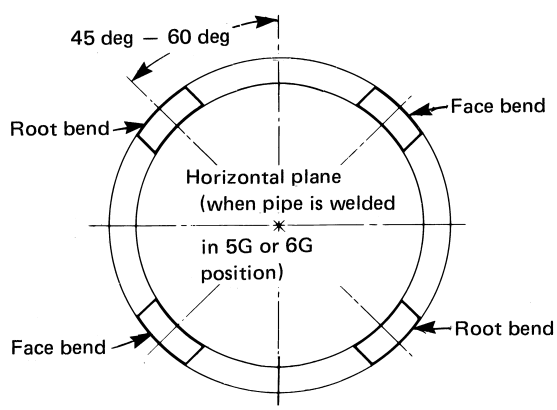

Copyrighted material licensed to Fermi National Laboratory by Clarivate Analytics (US) LLC, subscriptions.techstreet.com, downloaded on 2020-09-23 17:45:20 +0000 by Fermi National Laboratory User.
No further reproduction or distribution is permitted.

Figure QW-463.2(e)
Performance Qualification

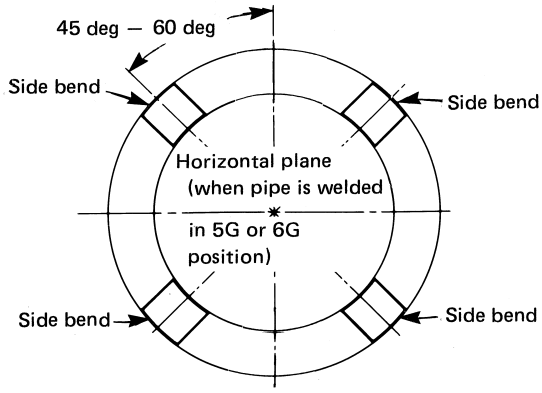

Figure QW-463.2(f)
Pipe — NPS 10 (DN 250) Assembly Performance Qualification

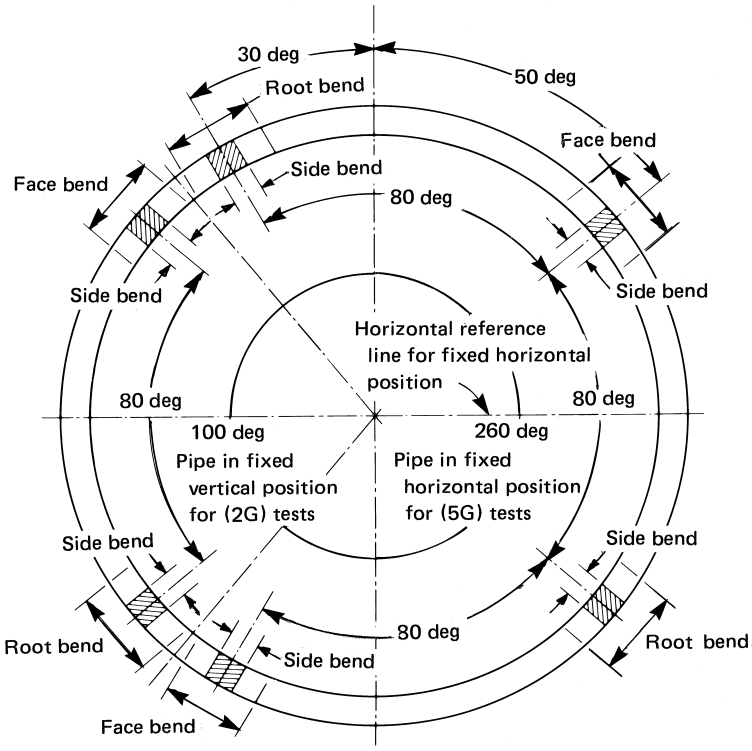

Copyrighted material licensed to Fermi National Laboratory by Clarivate Analytics (US) LLC, subscriptions.techstreet.com, downloaded on 2020-09-23 17:45:20 +0000 by Fermi National Laboratory User.
No further reproduction or distribution is permitted.

Figure QW-463.2(g)
NPS 6 (DN 150) or NPS 8 (DN 200) Assembly Performance Qualification

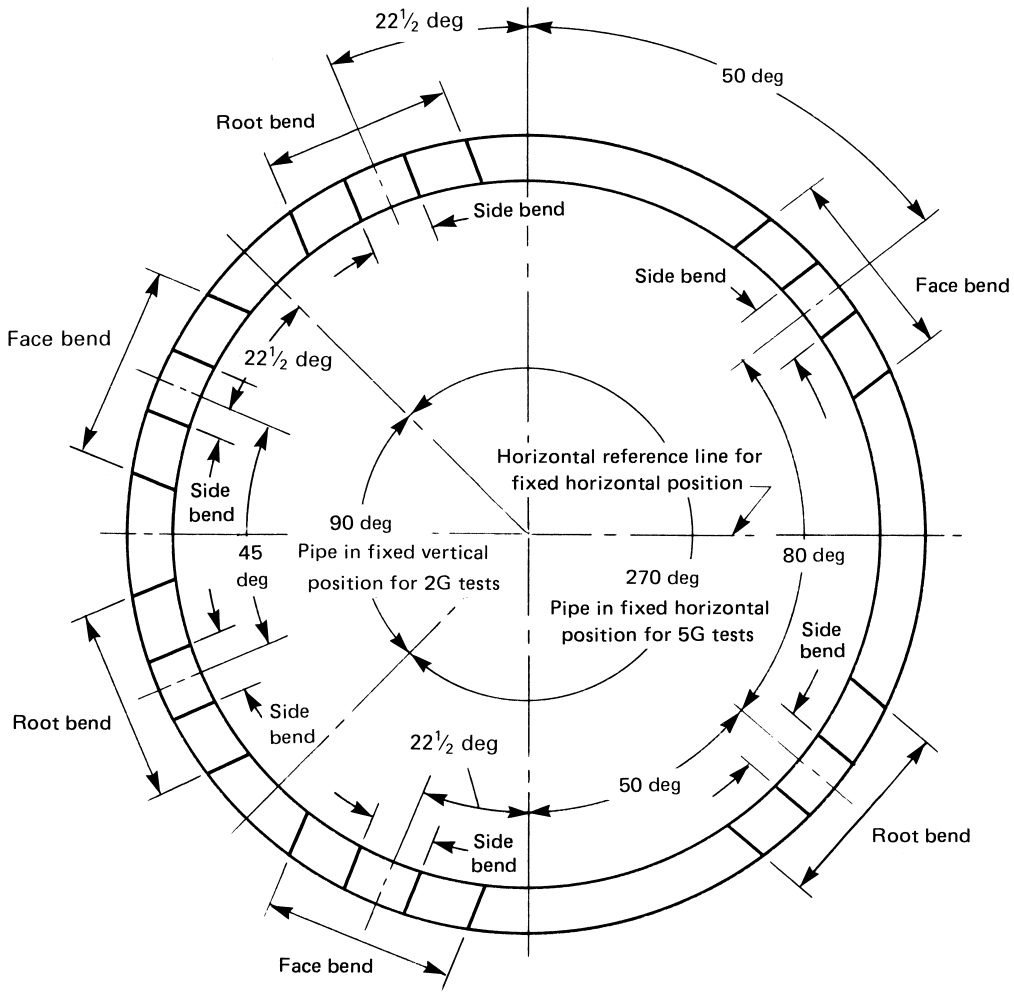

Copyrighted material licensed to Fermi National Laboratory by Clarivate Analytics (US) LLC, subscriptions.techstreet.com, downloaded on 2020-09-23 17:45:20 +0000 by Fermi National Laboratory User.
No further reproduction or distribution is permitted.

Figure QW-463.2(h)
Performance Qualification

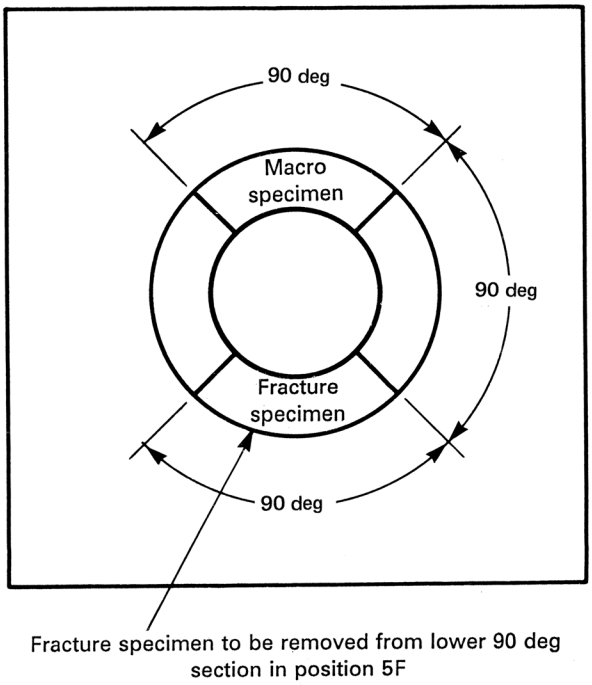

Copyrighted material licensed to Fermi National Laboratory by Clarivate Analytics (US) LLC, subscriptions.techstreet.com, downloaded on 2020-09-23 17:45:20 +0000 by Fermi National Laboratory User.
No further reproduction or distribution is permitted.

Figure QW-464.1
Procedure Qualification Test Coupon and Test Specimens

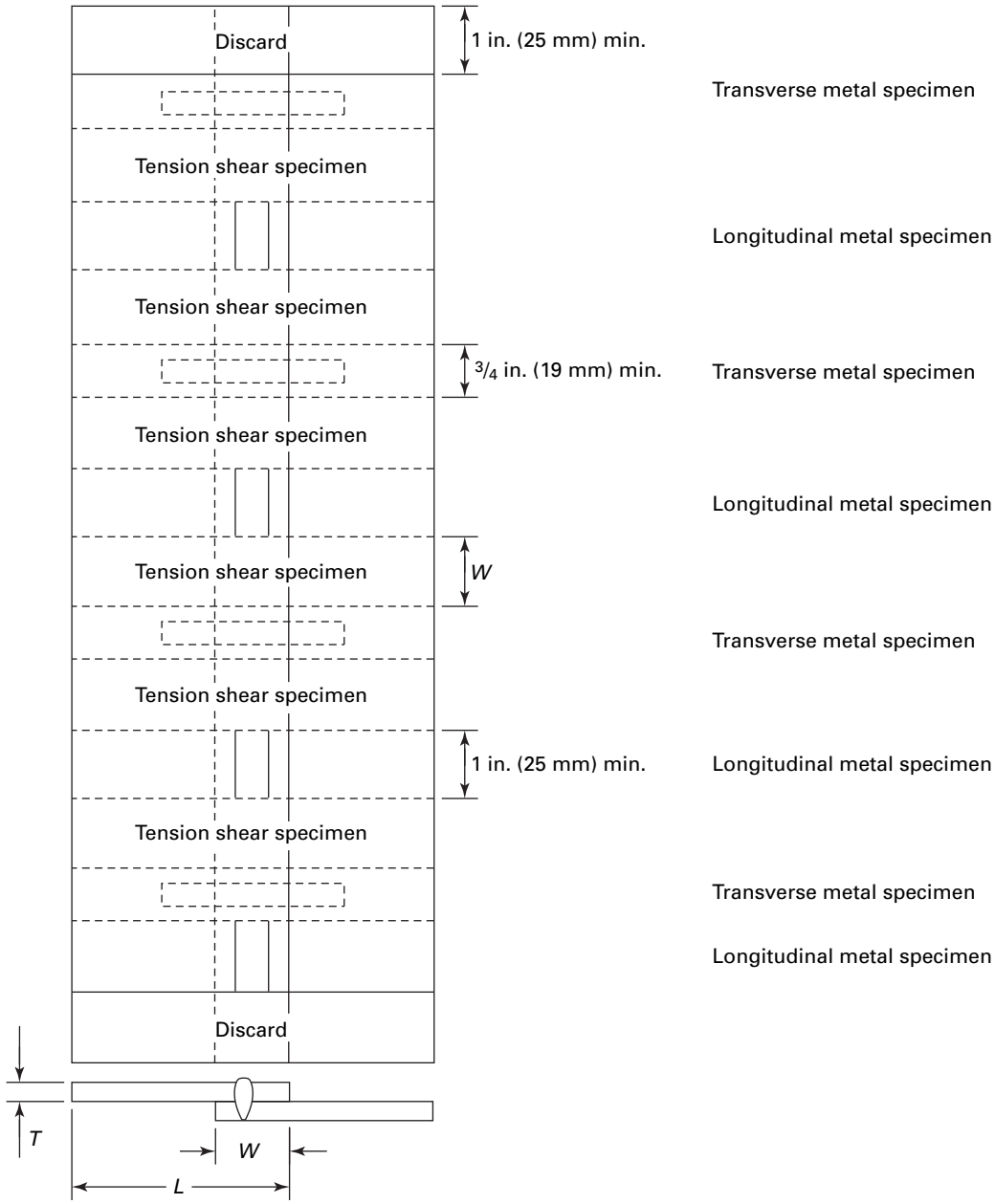

Thickness of Thinner, Sheet, *T*, in. (mm)	Specimen Width, *W*, in. (mm)	Recommended Length, *L*, in. (mm)
Up to 0.029 (0.74)	5/8 (16)	3 (75)
0.031 to 0.050 (0.79 to 1.2)	3/4 (19)	3 (75)
0.051 to 0.100 (1.3 to 2.54)	1 (25)	4 (100)
0.101 to 0.130 (2.57 to 3.30)	1 1/4 (32)	5 (125)
0.131 to 0.190 (3.33 to 4.83)	1 1/2 (38)	5 (125)
0.191 (4.85) and over	2 (50)	6 (150)

Copyrighted material licensed to Fermi National Laboratory by Clarivate Analytics (US) LLC, subscriptions.techstreet.com, downloaded on 2020-09-23 17:45:20 +0000 by Fermi National Laboratory User.
No further reproduction or distribution is permitted.

Figure QW-464.2
Performance Qualification Test Coupons and Test Specimens

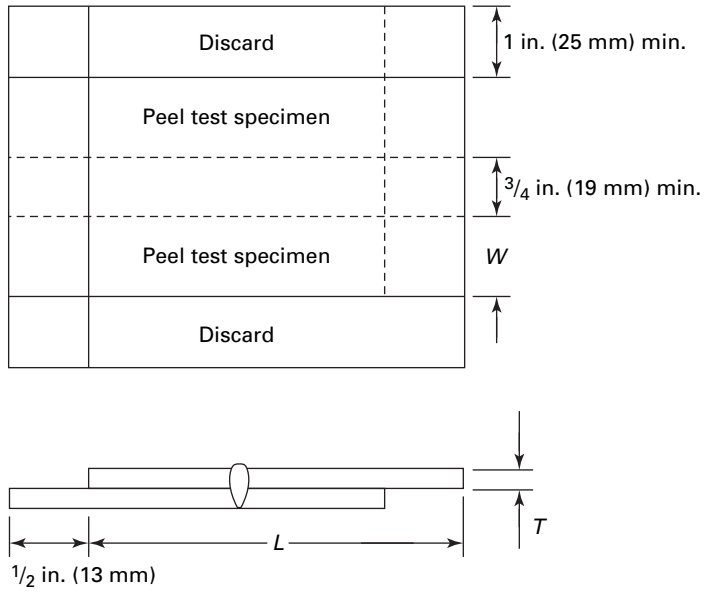

Thickness of Thinner Sheet, *T*, in. (mm)	Specimen Width, *W*, in. (mm)	Recommended, Length *L*, in. (mm)
Up to 0.029 (0.74)	5/8 (16)	2 (50)
0.030 to 0.058 (0.75 to 1.4)	1 (25)	1 (25)
0.059 to 0.125 (1.5 to 3.2)	1 1/2 (38)	4 (100)

(a) Peel Test Coupon and Specimens

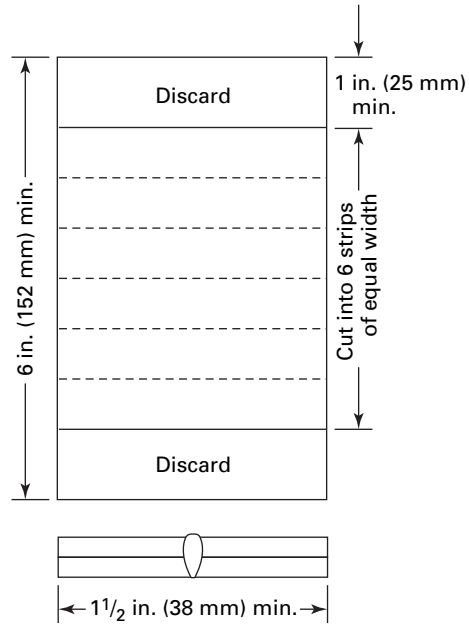

(b) Metallurgical Examination Coupon and Transverse Specimens

Copyrighted material licensed to Fermi National Laboratory by Clarivate Analytics (US) LLC, subscriptions.techstreet.com, downloaded on 2020-09-23 17:45:20 +0000 by Fermi National Laboratory User.
No further reproduction or distribution is permitted.

(19)

Figure QW-466.1
Test Jig Dimensions

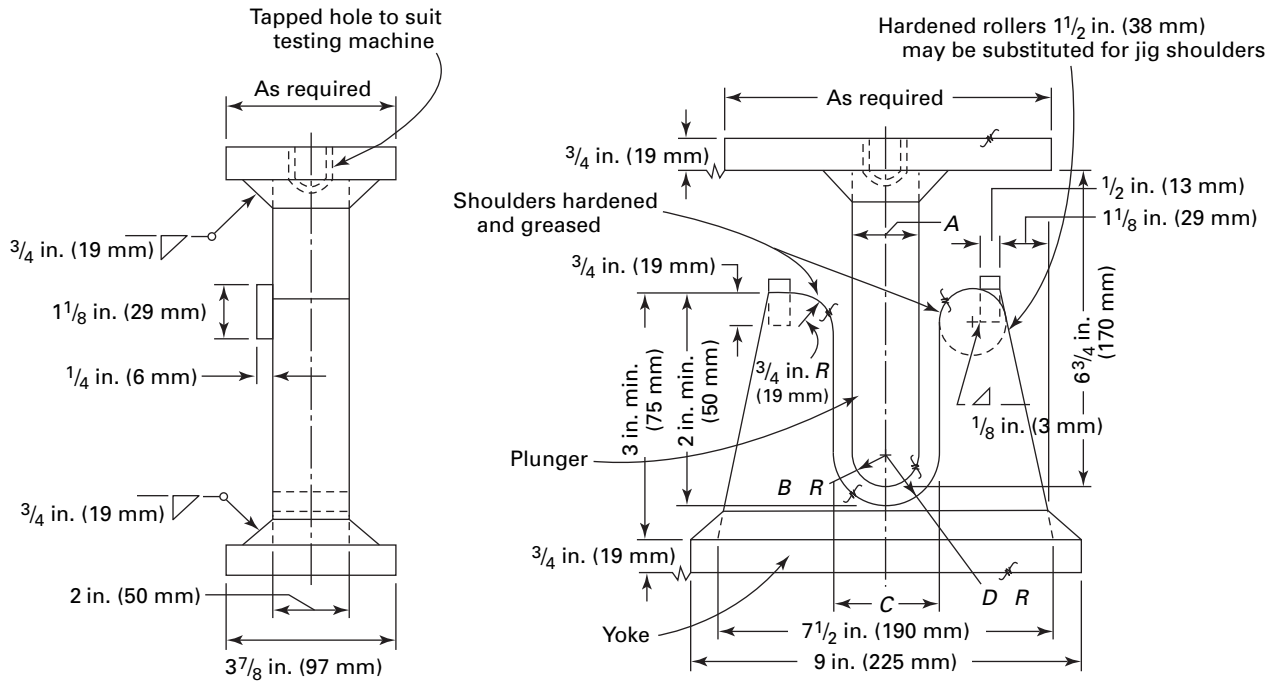

U.S. Customary Units

Material	Thickness of Specimen, t, in.	A, in.	B, in.	C, in.	D, in.
P-No. 23 to P-No. 21 through P-No. 25; P-No. 21 through P-No. 25 with F-No. 23 or 26; P-No. 35; any P-No. metal with F-No. 33, 36, or 37	1/8 Less than 1/8	2 1/16 16 1/2 t	1 1/32 8 1/4 t	2 3/8 18 1/2 t + 1/16	1 3/16 9 1/4 t + 1/32
P-No. 11A, P-No. 11B; P-No. 25 to P-No. 21 or P-No. 22 or P-No. 25	3/8 Less than 3/8	2 1/2 6 2/3 t	1 1/4 3 1/3 t	3 3/8 8 2/3 t + 1/8	1 11/16 4 1/3 t + 1/16
P-No. 51; P-No. 49	3/8 Less than 3/8	3 8 t	1 1/2 4 t	3 7/8 10 t + 1/8	1 15/16 5 t + 1/16
P-No. 52; P-No. 53; P-No. 61; P-No. 62	3/8 Less than 3/8	3 3/4 10 t	1 7/8 5 t	4 5/8 12 t + 1/8	2 5/16 6 t + 1/16
All others with greater than or equal to 20% elongation	3/8 Less than 3/8	1 1/2 4 t	3/4 2 t	2 3/8 6 t + 1/8	3/16 3 t + 1/16
Materials with 3% to less than 20% elongation	[Note (1)]	32 7/8 t max.	16 7/16 t max.	A + 2 t + 1/16 max.	1/2 C + 1/32 max.

Copyrighted material licensed to Fermi National Laboratory by Clarivate Analytics (US) LLC, subscriptions.techstreet.com, downloaded on 2020-09-23 17:45:20 +0000 by Fermi National Laboratory User.
No further reproduction or distribution is permitted.

Figure QW-466.1
Test Jig Dimensions (Cont'd)

SI Units

Material	Thickness of Specimen, t, mm	A, mm	B, mm	C, mm	D, mm
P-No. 23 to P-No. 21 through P-No. 25; P-No. 21 through P-No. 25 with F-No. 23 or 26; P-No. 35; any P-No. metal with F-No. 33, 36, or 37	3	50	25	57	29
	Less than 3	$16\frac{1}{2}t$	$8\frac{1}{4}t$	$18\frac{1}{2}t + 1.6$	$9\frac{1}{4}t + 0.8$
P-No. 11A, P-No. 11B; P-No.25 to P-No. 21 or P-No. 22 or P-No. 25	10	67	33	90	45
	Less than 10	$6\frac{2}{3}t$	$3\frac{1}{3}t$	$8\frac{2}{3}t + 3.2$	$4\frac{1}{3}t + 1.6$
P-No. 51; P-No. 49	10	80	40	103	52
	Less than 10	$8t$	$4t$	$10t + 3.2$	$5t + 1.6$
P-No. 52; P-No. 53; P-No. 61; P-No. 62	10	100	50	123	62
	Less than 10	$10t$	$5t$	$12t + 3.2$	$6t + 1.6$
All others with greater than or equal to 20% elongation	10	40	20	63	32
	Less than 10	$4t$	$2t$	$6t + 3.2$	$3t + 1.6$
Materials with 3% to less than 20% elongation	[Note (1)]	$32\frac{7}{8}t$ max.	$16\frac{7}{16}t$ max.	$A + 2t + 1.6$ max.	$\frac{1}{2}C + 0.8$ max.

GENERAL NOTES:

(a) For P-Numbers, see QW/QB-422; for F-Numbers, see QW-432.

(b) For guided-bend jig configuration, see QW-466.2, QW-466.3, and QW-466.4.

(c) The weld and heat-affected zone, in the case of a transverse weld bend specimen, shall be completely within the bend portion of the specimen after testing.

(d) When the bending properties of the weldment make it unlikely that the requirements of General Note (c) can be met, the wrap around jig shown in Figure QW-466.3 should be considered.

NOTE:

(1) The dimensions of the test jig shall be such as to give the bend test specimen a calculated percent outer fiber elongation equal to at least that of the base material with the lower minimum elongation as specified in the base material specification.

$$\text{percent outer fiber elongation} = \frac{100t}{A + t}$$

The following equation is provided for convenience in calculating the bend specimen thickness:

$$\text{thickness of specimen}(t) = \frac{A \times \text{percent elongation}}{\left[100 - (\text{percent elongation})\right]}$$

Copyrighted material licensed to Fermi National Laboratory by Clarivate Analytics (US) LLC, subscriptions.techstreet.com, downloaded on 2020-09-23 17:45:20 +0000 by Fermi National Laboratory User.
No further reproduction or distribution is permitted.

Figure QW-466.2
Guided-Bend Roller Jig

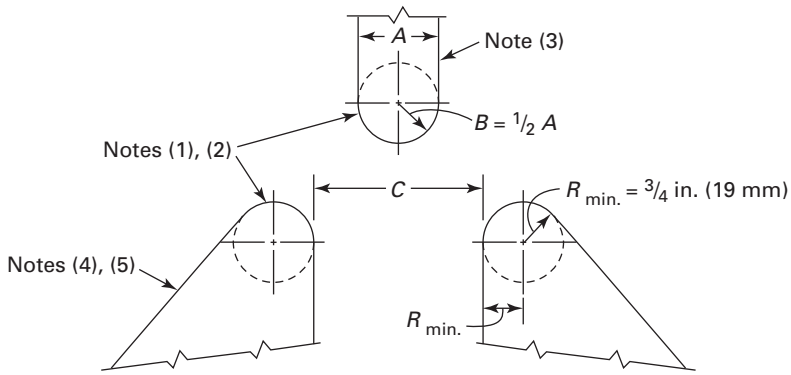

GENERAL NOTES:
(a) See Figure QW-466.1 for jig dimensions and general notes.
(b) When the bending properties of the weldment make it unlikely that the requirements of General Note (c) of Figure QW-466.1 can be met, the wrap around jig shown in Figure QW-466.3 should be considered.

NOTES:
(1) Either hardened and greased shoulders or hardened rollers free to rotate shall be used.
(2) The shoulders or rollers shall have a minimum bearing surface of 2 in. (50 mm) for placement of the specimen. The rollers shall be high enough above the bottom of the jig so that the specimens will clear the rollers when the ram is in the low position.
(3) The ram shall be fitted with an appropriate base and provision made for attachment to the testing machine, and shall be of a sufficiently rigid design to prevent deflection and misalignment while making the bend test. The body of the ram may be less than the dimensions shown in column A of Figure QW-466.1.
(4) If desired, either the rollers or the roller supports may be made adjustable in the horizontal direction so that specimens of *t* thickness may be tested on the same jig.
(5) The roller supports shall be fitted with an appropriate base designed to safeguard against deflection and misalignment and equipped with means for maintaining the rollers centered midpoint and aligned with respect to the ram.

Figure QW-466.3
Guided-Bend Wrap Around Jig

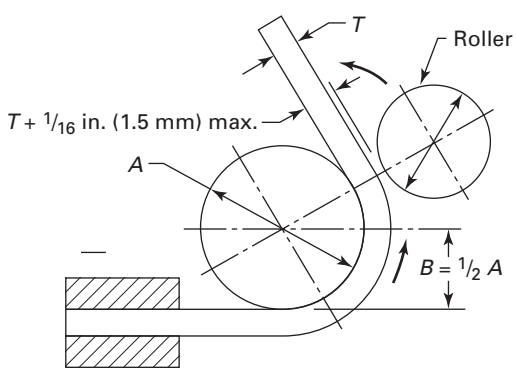

GENERAL NOTES:
(a) See Figure QW-466.1 for jig dimensions and other general notes.
(b) Dimensions not shown are the option of the designer. The essential consideration is to have adequate rigidity so that the jig parts will not spring.
(c) The specimen shall be firmly clamped on one end so that there is no sliding of the specimen during the bending operation.
(d) Test specimens shall be removed from the jig when the outer roll has been removed 180 deg from the starting point.

Copyrighted material licensed to Fermi National Laboratory by Clarivate Analytics (US) LLC, subscriptions.techstreet.com, downloaded on 2020-09-23 17:45:20 +0000 by Fermi National Laboratory User.
No further reproduction or distribution is permitted.

Figure QW-466.4
Stud-Weld Bend Jig

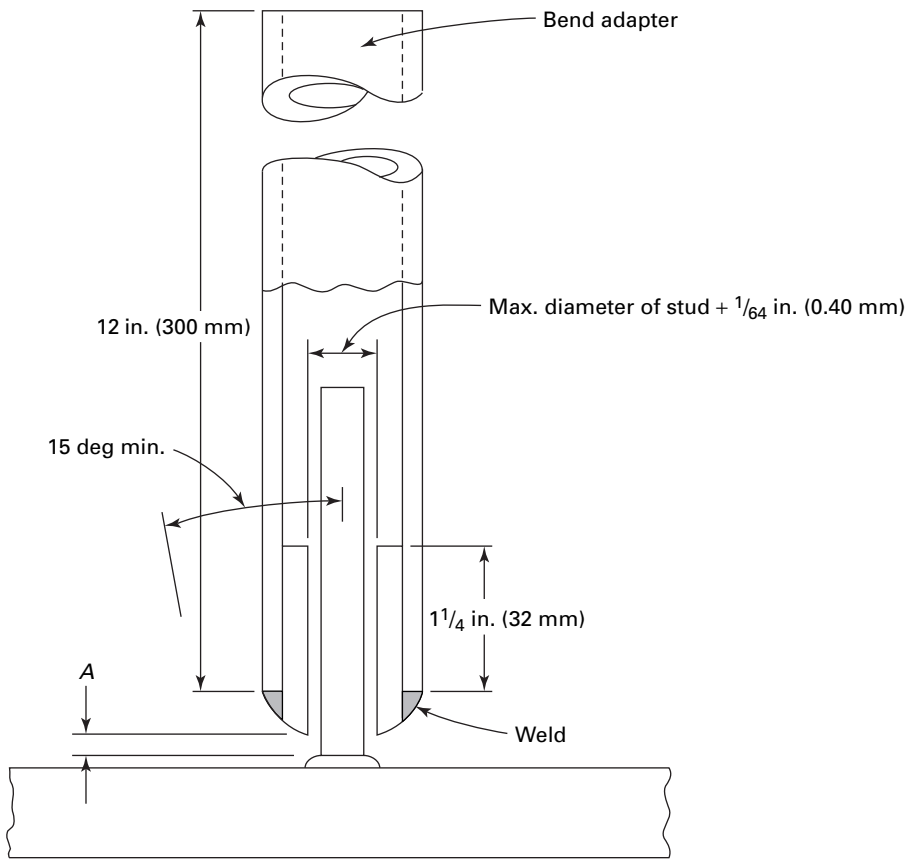

For Stud Diameter, in. (mm)	Use Adapter Gap, *A*, in. (mm)
1/8 (3)	1/8 (3)
3/16 (5)	1/8 (3)
1/4 (6)	3/16 (5)
3/8 (10)	7/32 (5.5)
1/2 (13)	5/16 (8)
5/8 (16)	11/32 (9)
3/4 (19)	15/32 (12)
7/8 (22)	15/32 (12)
1 (25)	19/32 (15)

Copyrighted material licensed to Fermi National Laboratory by Clarivate Analytics (US) LLC, subscriptions.techstreet.com, downloaded on 2020-09-23 17:45:20 +0000 by Fermi National Laboratory User.
No further reproduction or distribution is permitted.

Figure QW-466.5
Torque Testing Arrangement for Stud Welds

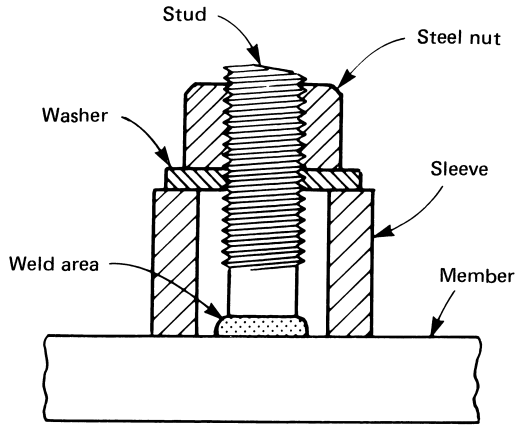

GENERAL NOTES:
(a) Dimensions are appropriate to the size of the stud.
(b) Threads of the stud shall be clean and free of lubricant other than residual cutting oil.

Copyrighted material licensed to Fermi National Laboratory by Clarivate Analytics (US) LLC, subscriptions.techstreet.com, downloaded on 2020-09-23 17:45:20 +0000 by Fermi National Laboratory User.
No further reproduction or distribution is permitted.

Figure QW-466.6
Suggested Type Tensile Test Figure for Stud Welds

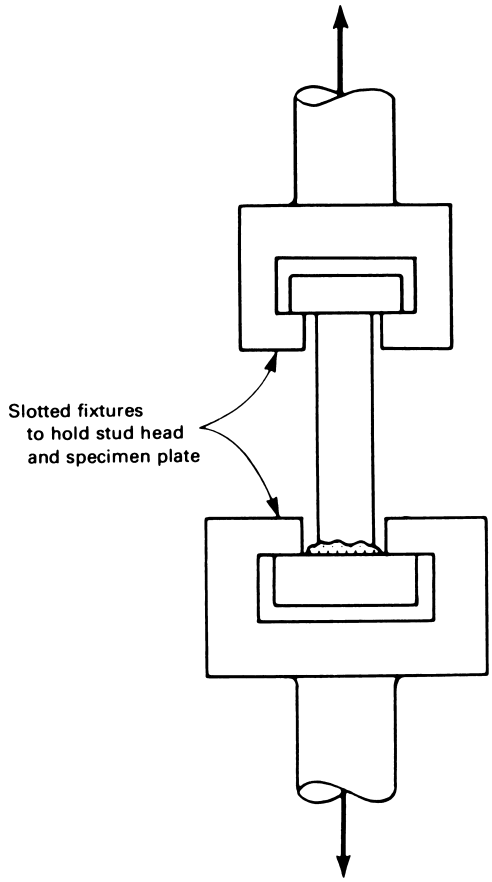

Figure QW-469.1
Butt Joint

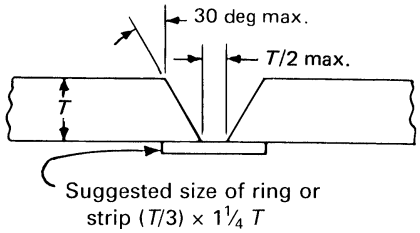

Figure QW-469.2
Alternative Butt Joint

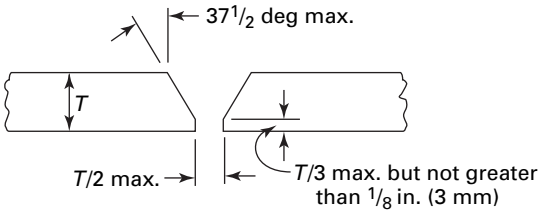

Copyrighted material licensed to Fermi National Laboratory by Clarivate Analytics (US) LLC, subscriptions.techstreet.com, downloaded on 2020-09-23 17:45:20 +0000 by Fermi National Laboratory User.
No further reproduction or distribution is permitted.

QW-470 ETCHING — PROCESSES AND REAGENTS

QW-471 GENERAL

The surfaces to be etched should be prepared by filing, machining, grinding, or polishing to delineate the macro-features of the specimen's weld and HAZ after etching. With different alloys and tempers, the etching period will vary from a few seconds to several minutes, and should be continued until the desired contrast is obtained. As a protection from the fumes liberated during the etching process, this work should be done under a hood. After etching, the specimens should be thoroughly rinsed and then dried with a blast of warm air. Coating the surface with a thin clear lacquer will preserve the appearance. (Reference ASTM E340, Standard Test Method for Macro-etching Metals and Alloys, or other industry-accepted standards.)

QW-472 FOR FERROUS METALS

Etching solutions suitable for carbon and low alloy steels, together with directions for their use, are suggested in QW-472.1 through QW-472.4.

QW-472.1 Hydrochloric Acid. Hydrochloric (muriatic) acid and water, equal parts, by volume. The solution should be kept at or near the boiling temperature during the etching process. The specimens are to be immersed in the solution for a sufficient period of time to reveal all lack of soundness that might exist at their cross-sectional surfaces.

QW-472.2 Ammonium Persulfate. One part of ammonium persulfate to nine parts of water, by weight. The solution should be used at room temperature, and should be applied by vigorously rubbing the surface to be etched with a piece of cotton saturated with the solution. The etching process should be continued until there is a clear definition of the structure in the weld.

QW-472.3 Iodine and Potassium Iodide. One part of powdered iodine (solid form), two parts of powdered potassium iodide, and ten parts of water, all by weight. The solution should be used at room temperature, and brushed on the surface to be etched until there is a clear definition or outline of the weld

QW-472.4 Nitric Acid. One part of nitric acid and three parts of water, by volume.

CAUTION: Always pour the acid into the water. Nitric acid causes bad stains and severe burns.

The solution may be used at room temperature and applied to the surface to be etched with a glass stirring rod. The specimens may also be placed in a boiling solution of the acid, but the work should be done in a well-ventilated room. The etching process should be continued for a sufficient period of time to reveal all lack of soundness that might exist at the cross-sectional surfaces of the weld.

QW-473 FOR NONFERROUS METALS

The following etching reagents and directions for their use are suggested for revealing the macrostructure.

QW-473.1 Aluminum and Aluminum-Base Alloys.

Solution	Volume
Hydrochloric acid (concentrated)	15 ml
Hydrofluoric acid (48%)	10 ml
Water	85 ml

This solution is to be used at room temperature, and etching is accomplished by either swabbing or immersing the specimen.

QW-473.2 For Copper and Copper-Base Alloys: Cold Concentrated Nitric Acid. Etching is accomplished by either flooding or immersing the specimen for several seconds under a hood. After rinsing with a flood of water, the process is repeated with a 50-50 solution of concentrated nitric acid and water.

In the case of the silicon bronze alloys, it may be necessary to swab the surface to remove a white (SiO_2) deposit.

QW-473.3 For Nickel and Nickel-Base Alloys.

Material	Formula
Nickel	Nitric Acid or Lepito's Etch
Low Carbon Nickel	Nitric Acid or Lepito's Etch
Nickel–Copper (400)	Nitric Acid or Lepito's Etch
Nickel–Chromium–Iron (600 and 800)	Aqua Regia or Lepito's Etch

Table QW-473.3-1
Makeup of Equations for Aqua Regia and Lepito's Etch

Solution	Aqua Regia [Note (1)], [Note (2)]	Lepito's Etch [Note (2)], [Note (3)]
Nitric Acid, Concentrated — HNO_3	1 part	3 ml
Hydrochloric Acid, Concentrated — HCL	2 parts	10 ml
Ammonium Sulfate – $(NH_4)_2$ (SO_4)	...	1.5 g
Ferric Chloride – $FeCl_3$	...	2.5 g
Water	...	7.5 ml

NOTES:
(1) Warm the parts for faster action.
(2) Etching is accomplished by either swabbing or immersing the specimen.
(3) Mix solution as follows:
(a) Dissolve $(NH_4)_2$ (SO_4) in H_2O.
(b) Dissolve powdered $FeCl_3$ in warm HCl.
(c) Mix (a) and (b) above and add HNO_3.

Copyrighted material licensed to Fermi National Laboratory by Clarivate Analytics (US) LLC, subscriptions.techstreet.com, downloaded on 2020-09-23 17:45:20 +0000 by Fermi National Laboratory User.
No further reproduction or distribution is permitted.

QW-473.4 For Titanium.

Solution	Kroll's Etch	Keller's Etch
Hydrofluoric acid (48%)	1 to 3 ml	½ ml
Nitric acid (concentrated)	2 to 6 ml	2½ ml
Hydrochloric Acid (concentrated)	...	1½ ml
Water	To make 100 ml	To make 100 ml

QW-473.5 For Zirconium.

Solution	Volume
Hydrofluoric acid	3 ml
Nitric acid (concentrated)	22 ml
Water	22 ml

Apply by swab and rinse in cold water.

These are general purpose etchants which are applied at room temperature by swabbing or immersion of the specimen.

Copyrighted material licensed to Fermi National Laboratory by Clarivate Analytics (US) LLC, subscriptions.techstreet.com, downloaded on 2020-09-23 17:45:20 +0000 by Fermi National Laboratory User.
No further reproduction or distribution is permitted.

ARTICLE V
STANDARD WELDING PROCEDURE SPECIFICATIONS (SWPSS)

QW-500 GENERAL

The SWPSs listed in Mandatory Appendix E are acceptable for construction in which the requirements of the ASME Boiler and Pressure Vessel Code, Section IX are specified. Any requirements of the applicable Construction Code Section regarding SWPS take precedence over the requirements of Section IX. These SWPSs are not permitted for construction where toughness testing of the WPS is required by the Construction Code.

Only SWPSs (including edition) that have been accepted in Mandatory Appendix E within the 1998 Edition or any later edition of Section IX may be used in accordance with this Article. Adoption of SWPSs (including edition) shall be in accordance with the current edition of Section IX [see QG-100(d)].

QW-510 ADOPTION OF SWPSS

Prior to use, the organization that will be responsible for and provide operational control over production welding shall comply with the following for each SWPS that it intends to use, except as noted in QW-520.

(a) Enter the name of the organization on the SWPS.

(b) An employee of that organization shall sign and date the SWPS.

(c) The applicable Code Section(s) (Section VIII, B31.1, etc.) and/or any other fabrication document (contract, specification, etc.) that must be followed during welding shall be listed on the SWPS.

(d) The organization shall weld and test one groove weld test coupon following that SWPS. The following information shall be recorded:

(1) the specification, type, and grade of the base metal welded

(2) groove design

(3) initial cleaning method

(4) presence or absence of backing

(5) The ASME or AWS specification and AWS classification of electrode or filler metal used and manufacturer's trade name

(6) size and classification of tungsten electrode for GTAW

(7) size of consumable electrode or filler metal

(8) shielding gas and flow rate for GTAW and GMAW

(9) preheat temperature

(10) position of the groove weld and, if applicable, the progression

(11) if more than one process or electrode type is used, the approximate weld metal deposit thickness for each process or electrode type

(12) maximum interpass temperature

(13) post weld heat treatment used, including holding time and temperature range

(14) visual inspection and mechanical testing results

(15) the results of volumetric examination when permitted as an alternative to mechanical testing by QW-304

(e) The coupon shall be visually examined in accordance with QW-302.4 and mechanically tested in accordance with QW-302.1 or volumetrically examined in accordance with QW-302.2. If visual examination, volumetric examination, or any test specimen fails to meet the required acceptance criteria, the test coupon shall be considered as failed and a new test coupon shall be welded before the organization may use the SWPS.

QW-511 USE OF DEMONSTRATED SWPSS

Code Sections or fabrication documents that are required to be referenced by QW-510(c) may be added or deleted from a demonstrated SWPS without further demonstrations.

QW-520 USE OF SWPSS WITHOUT DISCRETE DEMONSTRATION

Once an SWPS has been demonstrated, additional SWPSs that are similar to the SWPS that was demonstrated may be used without further demonstration. Such additional SWPSs shall be compared to the SWPS that was used for the demonstration, and the following limitations shall not be exceeded:

(a) a change in the welding process.

(b) a change in the P-Number.

(c) a change from the as-welded condition to the heat-treated condition. This limitation also applies for SWPSs that allow use in both conditions (e.g., SWPS B2.1-021 allows production welding with or without heat treatment; if the demonstration was performed without heat treatment, production welding with heat treatment is not permitted). Once heat treatment has been demonstrated for any SWPS, this limitation no longer applies.

(d) a change from a gas-shielded flux-cored wire or solid wire to a self-shielded flux-cored wire or vice versa.

Copyrighted material licensed to Fermi National Laboratory by Clarivate Analytics (US) LLC, subscriptions.techstreet.com, downloaded on 2020-09-23 17:45:20 +0000 by Fermi National Laboratory User.
No further reproduction or distribution is permitted.

(e) a change from globular, spray or pulsed spray transfer welding to short-circuiting transfer welding or vice versa.

(f) a change in the F-Number of the welding electrode.

(g) the addition of preheat above ambient temperature.

(h) a change from an SWPS that is identified as for sheet metal to one that is not and vice versa.

QW-530 FORMS

A suggested Form QW-485 for documenting the welding variables and test results of the demonstration is provided in Nonmandatory Appendix B.

(19) QW-540 PRODUCTION USE OF SWPSS

As with any WPS, welding that is done following an SWPS shall be done in strict accordance with the SWPS. In addition, the following requirements apply to the use of SWPSs:

(a) The organization may not deviate from the welding conditions specified on the SWPS.

(b) SWPSs may not be supplemented with PQRs or revised in any manner except for reference to the applicable Code Section or other fabrication documents as provided by QW-511.

(c) Only the welding processes shown on an SWPS shall be used in given production joint. When a multiprocess SWPS is selected, the processes shown on the SWPS shall be used in the order and manner specified on the SWPS.

(d) SWPSs shall not be used in the same production joint together with WPSs qualified by the organization.

(e) The organization may supplement an SWPS by attaching additional instructions to provide the welder with further direction for making production welds to Code or other requirements. When SWPSs are supplemented with instructions that address any condition shown on the SWPS, such instructions shall be within the limits of the SWPS. For example, when an SWPS permits use of several electrode sizes, supplemental instructions may direct the welder to use only one electrode size out of those permitted by the SWPS; however, the supplemental instructions may not permit the welder to use a size other than one or more of those permitted by the SWPS.

(f) SWPSs may not be used until the demonstration of QW-510 has been satisfactorily welded, tested, and certified.

(g) The identification number of the Supporting Demonstration shall be noted on each SWPS that it supports prior to using the SWPS.

(h) The certified Supporting Demonstration Record shall be available for review.

Copyrighted material licensed to Fermi National Laboratory by Clarivate Analytics (US) LLC, subscriptions.techstreet.com, downloaded on 2020-09-23 17:45:20 +0000 by Fermi National Laboratory User.
No further reproduction or distribution is permitted.

PART QB
BRAZING

ARTICLE XI
BRAZING GENERAL REQUIREMENTS

QB-100 SCOPE

The rules in this Part apply to the preparation of brazing procedure specifications, and the qualification of brazing procedures, brazers, and brazing operators for all types of manual and machine brazing processes permitted in this Section. These rules may also be applied, insofar as they are applicable, to other manual or machine brazing processes, permitted in other Sections.

QB-101

In performance qualification, the basic criterion established for brazer qualification is to determine the brazer's ability to make a sound brazed joint. The purpose of the performance qualification test for the brazing operator is to determine the operator's mechanical ability to operate the brazing equipment to make a sound braze joint.

QB-103 RESPONSIBILITY

QB-103.1 Brazing. Each organization shall conduct the tests required in this Section to qualify the brazing procedures used in the construction of the brazed assemblies built under this Code and the performance of brazers and brazing operators who apply these procedures.

QB-103.2 Records. Each organization shall maintain a record of the results obtained in brazing procedure and brazer or brazing operator performance qualifications. Refer to recommended Forms in Nonmandatory Appendix B.

QB-110 BRAZE ORIENTATION

NOTE: In the following paragraphs the word *position* is synonymous with *flow position*.

The orientations of brazes with respect to planes of reference are classified in accordance with Figure QB-461.1 into four positions (A, B, C, and D in column 1), based on the basic flow of brazing filler metal through joints. These positions are flat flow, vertical downflow, vertical upflow, and horizontal flow.

The maximum permitted angular deviation from the specified flow plane is ±45 deg.

QB-120 TEST POSITIONS FOR LAP, BUTT, SCARF, OR RABBET JOINTS

Brazed joints may be made in test coupons oriented in any of the positions in Figure QB-461.2 and as described in the following paragraphs, except that angular deviation from the specified horizontal and vertical flow planes in accordance with column 1 of Figure QB-461.2 is permitted during brazing.

QB-121 FLAT-FLOW POSITION

The test coupon joints in position suitable for applying brazing filler metal in rod, strip, or other suitable form under the flat-flow conditions are shown in illustrations (1) through (5) of Line A in Figure QB-461.2. The maximum permitted angular deviation from the specified flow plane is ±15 deg.

QB-122 VERTICAL-DOWNFLOW POSITION

The test coupon joints in a position suitable for applying brazing filler metal in rod, strip, or other suitable form under the vertical-downflow conditions are shown in illustrations (1) through (4) of Line B in Figure QB-461.2. The brazing filler metal flows by capillary action with the aid of gravity downward into the joint. The maximum permitted angular deviation from the specified flow plane is ±15 deg.

QB-123 VERTICAL-UPFLOW POSITION

The test coupon joints in position suitable for applying brazing filler metal in rod, strip, or other suitable form under the vertical-upflow conditions are shown in illustrations (1) through (4) of Line C in Figure QB-461.2. The

Copyrighted material licensed to Fermi National Laboratory by Clarivate Analytics (US) LLC, subscriptions.techstreet.com, downloaded on 2020-09-23 17:45:20 +0000 by Fermi National Laboratory User.
No further reproduction or distribution is permitted.

brazing filler metal flows by capillary action through the joint. The maximum permitted angular deviation from the specified flow plane is ±15 deg.

QB-124 HORIZONTAL-FLOW POSITION

The test coupon joints in a position suitable for applying brazing filler metal in rod, strip, or other suitable form under the horizontal-flow conditions are shown in illustrations (1) and (2) of Line D of Figure QB-461.2. The brazing filler metal flows horizontally by capillary action through the joint. The maximum permitted angular deviation from the specified flow plane is ±15 deg.

QB-140 TYPES AND PURPOSES OF TESTS AND EXAMINATIONS

QB-141 TESTS

Tests used in brazing procedure and performance qualifications are specified in QB-141.1 through QB-141.6.

QB-141.1 Tension Tests. Tension tests, as described in QB-150, are used to determine the ultimate strength of brazed butt, scarf, lap, and rabbet joints.

QB-141.2 Guided-Bend Tests. Guided-bend tests, as described in QB-160, are used to determine the degree of soundness and ductility of butt and scarf joints.

QB-141.3 Peel Tests. Peel tests, as described in QB-170, are used to determine the quality of the bond and the amount of defects in lap joints.

QB-141.4 Sectioning Tests. Sectioning tests, i.e., the sectioning of test coupons, as described in QB-180, are used to determine the soundness of workmanship coupons or test specimens. Sectioning tests are also a substitute for the peel test when the peel test is impractical to perform.

QB-141.5 Workmanship Coupons. Workmanship coupons, as described in QB-182, are used to determine the soundness of joints other than the standard butt, scarf, lap, and rabbet joints.

QB-141.6 Visual Examination. Visual examination of brazed joints is used for estimating the soundness by external appearance, such as continuity of the brazing filler metal, size, contour, and wetting of fillet along the joint and, where appropriate, to determine if filler metal flowed through the joint from the side of application to the opposite side.

QB-150 TENSION TESTS

QB-151 SPECIMENS

Tension test specimens shall conform to one of the types illustrated in Figures QB-462.1(a) through QB-462.1(f), and shall meet the requirements of QB-153.

QB-151.1 Reduced Section — Plate. Reduced-section specimens conforming to the requirements given in Figures QB-462.1(a) and QB-462.1(c) may be used for tension tests on all thicknesses of plate. The specimens may be tested in a support fixture in substantial accordance with Figure QB-462.1(f).

(a) For thicknesses up to and including 1 in. (25 mm), a full thickness specimen shall be used for each required tension test.

(b) For plate thicknesses greater than 1 in. (25 mm), full thickness specimens or multiple specimens may be used, provided (c) and (d) are complied with.

(c) When multiple specimens are used in lieu of full thickness specimens, each set shall represent a single tension test of the full plate thickness. Collectively, all of the specimens required to represent the full thickness of the brazed joint at one location shall comprise a set.

(d) When multiple specimens are necessary, the entire thickness shall be mechanically cut into a minimum number of approximately equal strips of a size that can be tested in the available equipment. Each specimen of the set shall be tested and meet the requirements of QB-153.

QB-151.2 Reduced Section — Pipe. Reduced-section specimens conforming to the requirements given in Figure QB-462.1(b) may be used for tension tests on all thicknesses of pipe or tube having an outside diameter greater than 3 in. (75 mm). The specimens may be tested in a support fixture in substantial accordance with Figure QB-462.1(f).

(a) For thicknesses up to and including 1 in. (25 mm), a full thickness specimen shall be used for each required tension test.

(b) For pipe thicknesses greater than 1 in. (25 mm), full thickness specimens or multiple specimens may be used, provided (c) and (d) are complied with.

(c) When multiple specimens are used in lieu of full thickness specimens, each set shall represent a single tension test of the full pipe thickness. Collectively, all of the specimens required to represent the full thickness of the brazed joint at one location shall comprise a set.

(d) When multiple specimens are necessary, the entire thickness shall be mechanically cut into a minimum number of approximately equal strips of a size that can be tested in the available equipment. Each specimen of the set shall be tested and meet the requirements of QB-153.

QB-151.3 Full-Section Specimens for Pipe. Tension (19)
specimens conforming to the dimensions given in Figure QB-462.1(e) may be used for testing pipe with an outside diameter of 3 in. (75 mm) or less. The cross-sectional area of the pipe before testing shall be used to establish the tensile strength of the test specimen. As an alternative to full-section specimen for pipe, tension specimens in accordance with Figure QB-463.1(e), General Note (b) may be used.

Copyrighted material licensed to Fermi National Laboratory by Clarivate Analytics (US) LLC, subscriptions.techstreet.com, downloaded on 2020-09-23 17:45:20 +0000 by Fermi National Laboratory User.
No further reproduction or distribution is permitted.

QB-152 TENSION TEST PROCEDURE

The tension test specimen shall be ruptured under tensile load. The tensile strength shall be computed by dividing the ultimate total load by the least cross-sectional area of the specimen as measured before the load is applied.

(19) QB-153 ACCEPTANCE CRITERIA — TENSION TESTS

QB-153.1 Tensile Strength. Minimum values for procedure qualification are provided under the column heading "Minimum Specified Tensile" of Table QW/QB-422. In order to pass the tension test, the specimen shall have a tensile strength that is not less than

(a) the specified minimum tensile strength of the base metal in the annealed condition; or

(b) the specified minimum tensile strength of the weaker of the two in the annealed condition, if base metals of different specified minimum tensile strengths are used; or

(c) if the specimen breaks in the base metal outside of the braze, the test shall be accepted as meeting the requirements, provided the strength is not more than 5% below the minimum specified tensile strength of the base metal in the annealed condition.

(d) the specified minimum tensile strength is for full thickness specimens including clad brazing sheets for Aluminum Alclad materials (P-No. 104 and P-No. 105) less than $^1/_2$ in. (13 mm). For Aluminum Alclad materials $^1/_2$ in. (13 mm) and greater, the specified minimum tensile strength is for both full thickness specimens that include clad brazing sheets.

QB-153.2 Unassigned Metals. Unassigned metals shall be identified in the BPS and on the PQR by specification, type, and grade, or by chemical analysis and mechanical properties. The minimum tensile strength shall be defined by the organization that specified the unassigned metal if the tensile strength of that metal is not defined by the material specification (see QW-420).

QB-160 GUIDED-BEND TESTS

QB-161 SPECIMENS

Guided-bend test specimens shall be prepared by cutting the test plate or pipe to form specimens of approximately rectangular cross section. The cut surfaces shall be designated the sides of the specimen. The other two surfaces shall be designated the first and second surfaces. The specimen thickness and bend radius are shown in Figures QB-466.1, QB-466.2, and QB-466.3. Guided-bend specimens are of five types, depending on whether the axis of the joint is transverse or parallel to the longitudinal axis of the specimen, and which surface (first or second) is on the convex (outer) side of the bent specimen. The five types are defined as follows (QB-161.1 through QB-161.6).

QB-161.1 Transverse First Surface Bend. The joint is transverse to the longitudinal axis of the specimen, which is bent so that the first surface becomes the convex surface of the bent specimen. In general, the *first surface* is defined as that surface from which the brazing filler metal is applied and is fed by capillary attraction into the joint. Transverse first surface bend specimens shall conform to the dimensions shown in Figure QB-462.2(a). For subsize first surface bends, see QB-161.3.

QB-161.2 Transverse Second Surface Bend. The joint is transverse to the longitudinal axis of the specimen, which is bent so that the second surface becomes the convex surface of the bent specimen. In general, the *second surface* is defined as the surface opposite to that from which the brazing filler metal is placed or fed, but definitely is the surface opposite to that designated as the first surface, irrespective of how the brazing filler metal is fed. Transverse second surface bend specimens shall conform to the dimensions shown in Figure QB-462.2(a). For subsize first surface bends, see QB-161.3.

QB-161.3 Subsize Transverse Bend. In those cases where the wall thickness of the tube or pipe is less than $^3/_8$ in. (10 mm) and the diameter-to-thickness ratio does not permit the preparation of full-size rectangular guided-bend specimens, the $1^1/_2$ in. (38 mm) wide standard guided-bend specimen shown in Figure QB-462.2(a) may be replaced by three subsize specimens having a width of $^3/_8$ in. (10 mm) or $4t$, whichever is less.

QB-161.4 Longitudinal-Bend Tests. Longitudinal-bend tests may be used in lieu of the transverse-bend tests for testing braze metal or base metal combinations, which differ markedly in bending properties between

(a) the two base metals; or

(b) the braze metal and the base metal.

QB-161.5 Longitudinal First Surface Bend. The joint is parallel to the longitudinal axis of the specimen, which is bent so that the first surface becomes the convex surface of the bent specimen. The definition of first surface is as given in QB-161.1. Longitudinal first surface bend specimens shall conform to the dimensions given in Figure QB-462.2(b).

QB-161.6 Longitudinal Second Surface Bend. The joint is parallel to the longitudinal axis of the specimen, which is bent so that the second surface becomes the convex surface of the specimen. The definition of the second surface is given in QB-161.2. Longitudinal second surface bend specimens shall conform to the dimensions given in Figure QB-462.2(b).

QB-162 GUIDED-BEND TEST PROCEDURE

QB-162.1 Jigs. Guided-bend specimens shall be bent in test jigs that are in substantial accordance with QB-466. When using the jigs in accordance with Figure QB-466.1 or Figure QB-466.2, the side of the specimen

Copyrighted material licensed to Fermi National Laboratory by Clarivate Analytics (US) LLC, subscriptions.techstreet.com, downloaded on 2020-09-23 17:45:20 +0000 by Fermi National Laboratory User.
No further reproduction or distribution is permitted.

turned toward the gap of the jig shall be the first surface for first surface bend specimens (defined in QB-161.1), and the second surface for second surface bend specimens (defined in QB-161.2). The specimen shall be forced into the die by applying load on the plunger until the curvature of the specimen is such that a $\frac{1}{8}$ in. (3 mm) diameter wire cannot be inserted between the specimen and the die of Figure QB-466.1, or the specimen is bottom ejected, if the roller type of jig (Figure QB-466.2) is used.

When using the wrap around jig (Figure QB-466.3) the side of the specimen turned toward the roller shall be the first surface for first surface bend specimens, and the second surface for second surface bend specimens.

QB-163 ACCEPTANCE CRITERIA — BEND TESTS

The joint of a transverse-bend specimen shall be completely within the bent portion of the specimen after testing.

The guided-bend specimens shall have no open discontinuities exceeding $\frac{1}{8}$ in. (3 mm), measured in any direction on the convex surface of the specimen after bending. Cracks occurring on the corners of the specimen during testing shall not be considered, unless there is definite evidence that they result from flux inclusions, voids, or other internal discontinuities.

QB-170 PEEL TESTS

QB-171 SPECIMENS

The dimensions and preparation of the peel test specimen shall conform to the requirements of Figure QB-462.3.

QB-172 ACCEPTANCE CRITERIA — PEEL TEST

In order to pass the peel test, the specimens shall show evidence of brazing filler metal along each edge of the joint. Specimens shall be separated or peeled either by clamping Section A and striking Section B with a suitable tool such that the bending occurs at the fulcrum point (see Figure QB-462.3), or by clamping Section A and Section B in a machine suitable for separating the sections under tension. The separated faying surfaces of joints shall meet the following criteria:

(a) The total area of discontinuities (unbrazed areas, flux inclusions, etc.) shall not exceed 25% of the total area of any individual faying surface.

(b) The sum of the lengths of the discontinuities measured on any one line in the direction of the lap shall not exceed 25% of the lap.

(c) No discontinuity shall extend continuously from one edge of the joint to the other edge, irrespective of its direction.

QB-180 SECTIONING TESTS AND WORKMANSHIP COUPONS

QB-181 SECTIONING TEST SPECIMENS

The dimensions and configuration of the sectioning test specimens shall conform to the requirements of Figure QB-462.4. Each side of the specimen shall be polished and examined with at least a four-power magnifying glass. The sum of the length of unbrazed areas on either side, considered individually, shall not exceed 20% of the length of the joint overlap.

QB-182 WORKMANSHIP COUPONS

The dimensions and configuration of the workmanship coupon shall conform to the nearest approximation of the actual application. Some typical workmanship coupons are shown in Figure QB-462.5. Each side of the specimen shall be polished and examined with at least a four-power magnifying glass. The sum of the length of unbrazed areas on either side, considered individually, shall not exceed 20% of the length of the joint overlap.

Copyrighted material licensed to Fermi National Laboratory by Clarivate Analytics (US) LLC, subscriptions.techstreet.com, downloaded on 2020-09-23 17:45:20 +0000 by Fermi National Laboratory User.
No further reproduction or distribution is permitted.

ARTICLE XII
BRAZING PROCEDURE QUALIFICATIONS

(19) QB-200 GENERAL

QB-200.1 Each organization shall prepare written Brazing Procedure Specifications, which are defined as follows.

(a) Brazing Procedure Specification (BPS). A BPS is a written qualified brazing procedure prepared to provide direction for making production brazes to Code requirements. The BPS or other documents may be used to provide direction to the brazer or brazing operator to assure compliance with the Code requirements.

(b) Contents of the BPS. The completed BPS shall describe all of the essential and nonessential variables for each brazing process used in the BPS. These variables are listed in QB-250 and are defined in Article XIV, Brazing Data.

The BPS shall reference the supporting Procedure Qualification Record(s) (PQR) described in QB-200.2. The organization may include any other information in the BPS that may be helpful in making a Code braze.

(c) Changes to the BPS. Changes may be made in the nonessential variables of a BPS to suit production requirements without requalification provided such changes are documented with respect to the essential and nonessential variables for each process. This may be by amendment to the BPS or by use of a new BPS.

Changes in essential variables require requalification of the BPS [new or additional PQRs to support the change in essential variable(s)].

(d) Format of the BPS. The information required to be in the BPS may be in any format, written or tabular, to fit the needs of each organization, as long as every essential and nonessential variable outlined in QB-250 is included or referenced.

Form QB-482 (see Nonmandatory Appendix B) has been provided as a guide for the BPS. It is only a guide and does not list all required data for all brazing processes.

QB-200.2 Each organization shall be required to prepare a procedure qualification record, which is defined as follows.

(a) Procedure Qualification Record (PQR). The PQR is a record of variables recorded during the brazing of the test coupons. It also contains the test results of the tested specimens. Recorded variables normally fall within a small range of the actual variables that will be used in production brazing.

(b) Contents of the PQR. The completed PQR shall document all essential variables of QB-250 for each brazing process used during the brazing of the test coupon. Nonessential or other variables used during the brazing of the test coupon may be recorded at the organization's option. All variables, if recorded, shall be the actual variables (including ranges) used during the brazing of the test coupon. If variables are not monitored during brazing, they shall not be recorded. It is not intended that the full range or the extreme of a given range of variables to be used in production be used during qualification unless required due to a specific essential variable.

The PQR shall be certified accurate by the organization. The organization may not subcontract the certification function. This certification is intended to be the organization's verification that the information in the PQR is a true record of the variables that were used during the brazing of the test coupon and that the resulting tensile, bend, peel, or section (as required) test results are in compliance with Section IX.

(c) Changes to the PQR. Changes to the PQR are not permitted, except as described below. It is a record of what happened during a particular brazing test. Editorial corrections or addenda to the PQR are permitted. An example of an editorial correction is an incorrect P-Number or F-Number that was assigned to a particular base material or filler metal. An example of an addendum would be a change resulting from a Code change. For example, Section IX may assign a new F-Number to a filler material or adopt a new filler material under an established F-Number. This may permit, depending on the particular construction Code requirements, an organization to use other filler metals that fall within that particular F-Number where, prior to the Code revision, the organization was limited to the particular filler metal classification that was used during qualification. Additional information can be incorporated into a PQR at a later date provided the information is substantiated as having been part of the original qualification condition by lab record or similar data.

All changes to a PQR require recertification (including date) by the organization.

(d) Format of the PQR. Form QB-483 (see Nonmandatory Appendix B) has been provided as a guide for the PQR. The information required to be in the PQR may be in any format, to fit the needs of each organization, as long as every essential variable, required by QB-250, is included. Also the type of tests, number of tests, and test

Copyrighted material licensed to Fermi National Laboratory by Clarivate Analytics (US) LLC, subscriptions.techstreet.com, downloaded on 2020-09-23 17:45:20 +0000 by Fermi National Laboratory User.
No further reproduction or distribution is permitted.

results shall be listed in the PQR. Additional sketches or information may be attached or referenced to record the required variables.

(e) Availability of the PQR. The PQR shall be available for review but need not be made available to the brazer or brazing operator.

(f) Multiple BPSs With One PQR or Multiple PQRs With One BPS. Several BPSs may be prepared from the data on a single PQR (e.g., a vertical-upflow pipe PQR may support BPSs for the vertical-upflow and downflow positions on pipe within all other essential variables). A single BPS may cover several essential variable changes as long as a supporting PQR exists for each essential variable.

QB-200.3 To reduce the number of brazing procedure qualifications required, P-Numbers are assigned to base metals dependent on characteristics such as composition, brazability, and mechanical properties, where this can logically be done, and for ferrous and nonferrous metals.

The assignments do not imply that base metals may be indiscriminately substituted for a base metal which was used in the qualification test without consideration of the compatibility from the standpoint of metallurgical properties, postbraze heat treatment, design, mechanical properties, and service requirements.

QB-200.4 Dissimilar Base Metal Thicknesses. A BPS qualified on test coupons of equal thickness shall be applicable for production brazements between dissimilar base metal thicknesses provided the thickness of both base metals are within the qualified thickness range permitted by QB-451. A BPS qualified on test coupons of different thicknesses shall be applicable for production brazements between dissimilar base metal thicknesses provided the thickness of each base metal is within the qualified range of thickness (based on each test coupon thickness) permitted by QB-451.

QB-201 ORGANIZATIONAL RESPONSIBILITY

The organization shall certify that they have qualified each Brazing Procedure Specification, performed the procedure qualification test, and documented it with the necessary Procedure Qualification Record (PQR).

QB-202 TYPE OF TESTS REQUIRED

QB-202.1 Tests. The type and number of test specimens which shall be tested to qualify a brazing procedure are given in QB-451, and shall be removed in a manner similar to that shown in QB-463. If any test specimen required by QB-451 fails to meet the applicable acceptance criteria, the test coupon shall be considered as failed.

When it can be determined that the cause of failure is not related to brazing parameters, another test coupon may be brazed using identical brazing parameters. Alternatively, if adequate material of the original test coupon exists, additional test specimens may be removed as close as practicable to the original specimen location to replace the failed test specimens.

When it has been determined that the test failure was caused by an essential variable, a new test coupon may be brazed with appropriate changes to the variable(s) that were determined to cause the test failure. If the new test passes, the essential variables shall be documented on the PQR.

When it is determined that the test failure was caused by one or more brazing related factors other than essential variables, a new test coupon may be brazed with the appropriate changes to brazing related factors that were determined to cause the test failure. If the new test passes, the brazing related factors that were determined to cause the previous test failure shall be addressed by the organization to assure that the required properties are achieved in the production brazement.

QB-202.2 Base Metals. The procedure qualification shall encompass the thickness ranges to be used in production for the base metals to be joined or repaired. The range of thickness qualified is given in QB-451.

QB-203 LIMITS OF QUALIFIED FLOW POSITIONS FOR PROCEDURES (19)

(See Figures QB-461.1 and QB-461.2 and Table QB-461.3.)

QB-203.1 For plate, qualification in the flat-flow, vertical-upflow, or horizontal-flow position shall qualify for the vertical-downflow position. For pipe, qualification in the horizontal-flow or vertical-upflow position shall qualify for the vertical-downflow position.

Qualification in pipe shall qualify for plate, but not vice versa. Horizontal-flow in pipe shall also qualify for flat-flow in plate.

QB-203.2 Special Flow Positions. An organization who does production brazing in a special orientation may make the tests for procedure qualification in this specific orientation. Such qualifications are valid only for the flow positions actually tested, except that an angular deviation of ±15 deg is permitted in the inclination of the braze plane, as defined in Figures QB-461.1 and QB-461.2.

QB-203.3 The brazing process must be compatible, and the brazing filler metals, such as defined in the specifications of Section II, Part C, must be suitable for their use in specific flow positions. A brazer or brazing operator making and passing the BPS qualification test is thereby qualified for the flow position tested (see QB-301.2).

Copyrighted material licensed to Fermi National Laboratory by Clarivate Analytics (US) LLC, subscriptions.techstreet.com, downloaded on 2020-09-23 17:45:20 +0000 by Fermi National Laboratory User.
No further reproduction or distribution is permitted.

QB-210 PREPARATION OF TEST COUPON

QB-211 BASE METAL AND FILLER METAL

The base metals and filler metals shall be one or more of those listed in the BPS. The dimensions of the test assembly shall be sufficient to provide the required test specimens.

The base metals may consist of either plate, pipe, or other product forms. Qualification in pipe also qualifies for plate brazing, but not vice versa.

QB-212 TYPE AND DIMENSION OF JOINTS

The test coupon shall be brazed using a type of joint design proposed in the BPS for use in construction.

QB-250 BRAZING VARIABLES

QB-251 GENERAL

QB-251.1 Types of Variables for Brazing Procedure Specification (BPS). Brazing variables (listed for each brazing process in Tables QB-252 through QB-257) are subdivided into essential and nonessential variables (QB-401).

QB-251.2 Essential Variables. Essential variables are those in which a change, as described in the specific variables, is considered to affect the mechanical properties of the brazement, and shall require requalification of the BPS.

QB-251.3 Nonessential Variables. Nonessential variables are those in which a change, as described in the specific variables, may be made in the BPS without requalification.

Table QB-252
Torch Brazing (TB) (19)

Paragraph	252.1 Essential Variables	252.2 Nonessential Variables
QB-402 Base Metal	QB-402.1	...
	QB-402.3	...
QB-403 Brazing Filler Metal	QB-403.1	...
	QB-403.2	...
	QB-403.3	...
QB-406 Brazing Flux, Gas, or Atmosphere	QB-406.1	QB-406.3
QB-407 Flow Position	QB-407.1	...
QB-408 Joint Design	QB-408.2	...
	QB-408.4	...
QB-409 Postbraze Heat Treatment	QB-409.1	...
QB-410 Technique	...	QB-410.1
	...	QB-410.2
	...	QB-410.3
	...	QB-410.4
	...	QB-410.5

Copyrighted material licensed to Fermi National Laboratory by Clarivate Analytics (US) LLC, subscriptions.techstreet.com, downloaded on 2020-09-23 17:45:20 +0000 by Fermi National Laboratory User.
No further reproduction or distribution is permitted.

(19)

Table QB-253
Furnace Brazing (FB)

Paragraph	253.1 Essential Variables	253.2 Nonessential Variables
QB-402 Base Metal	QB-402.1	...
	QB-402.3	...
QB-403 Brazing Filler Metal	QB-403.1	...
	QB-403.2	...
	QB-403.3	...
QB-404 Brazing Temperature	QB-404.1	...
QB-406 Brazing Flux, Gas, or Atmosphere	QB-406.1	...
	QB-406.2	...
QB-407 Flow Position	QB-407.1	...
QB-408 Joint Design	QB-408.2	...
	QB-408.4	...
QB-409 Postbraze Heat Treatment	QB-409.1	...
QB-410 Technique	...	QB-410.1
	...	QB-410.2
QB-411 Brazing Time	...	QB-411.1

(19)

Table QB-254
Induction Brazing (IB)

Paragraph	254.1 Essential Variables	254.2 Nonessential Variables
QB-402 Base Metal	QB-402.1	...
	QB-402.3	...
QB-403 Brazing Filler Metal	QB-403.1	...
	QB-403.2	...
	QB-403.3	...
QB-404 Brazing Temperature	QB-404.1	...
QB-406 Brazing Flux, Gas, or Atmosphere	QB-406.1	...
QB-407 Flow Position	QB-407.1	...
QB-408 Joint Design	QB-408.2	...
	QB-408.4	...
QB-409 Postbraze Heat Treatment	QB-409.1	...
QB-410 Technique	...	QB-410.1
	...	QB-410.2
QB-411 Brazing Time	...	QB-411.1

Copyrighted material licensed to Fermi National Laboratory by Clarivate Analytics (US) LLC, subscriptions.techstreet.com, downloaded on 2020-09-23 17:45:20 +0000 by Fermi National Laboratory User.
No further reproduction or distribution is permitted.

Table QB-255
Resistance Brazing (RB)

(19)

Paragraph	255.1 Essential Variables	255.2 Nonessential Variables
QB-402 Base Metal	QB-402.1	...
	QB-402.3	...
QB-403 Brazing Filler Metal	QB-403.1	...
	QB-403.2	...
	QB-403.3	...
QB-404 Brazing Temperature	QB-404.1	...
QB-406 Brazing Flux, Gas, or Atmosphere	QB-406.1	...
QB-407 Flow Position	QB-407.1	...
QB-408 Joint Design	QB-408.2	...
	QB-408.4	...
QB-409 Postbraze Heat Treatment	QB-409.1	...
QB-410 Technique	...	QB-410.1
	...	QB-410.2
QB-411 Brazing Time	...	QB-411.1

Table QB-256
Dip Brazing — Salt or Flux Bath (DB)

(19)

Paragraph	256.1 Essential Variables	256.2 Nonessential Variables
QB-402 Base Metal	QB-402.1	...
	QB-402.3	...
QB-403 Brazing Filler Metal	QB-403.1	...
	QB-403.2	...
	QB-403.3	...
QB-404 Brazing Temperature	QB-404.1	...
QB-406 Brazing Flux, Gas, or Atmosphere	QB-406.1	...
QB-407 Flow Position	QB-407.1	...
QB-408 Joint Design	QB-408.2	...
	QB-408.4	...
QB-409 Postbraze Heat Treatment	QB-409.1	...
QB-410 Technique	...	QB-410.1
	...	QB-410.2
QB-411 Brazing Time	...	QB-411.1

Copyrighted material licensed to Fermi National Laboratory by Clarivate Analytics (US) LLC, subscriptions.techstreet.com, downloaded on 2020-09-23 17:45:20 +0000 by Fermi National Laboratory User.
No further reproduction or distribution is permitted.

(19)

Table QB-257
Dip Brazing — Molten Metal Bath (DB)

Paragraph	257.1 Essential Variables	257.2 Nonessential Variables
QB-402 Base Metal	QB-402.1	...
	QB-402.3	...
QB-403 Brazing Filler Metal	QB-403.1	...
	QB-403.2	...
	QB-403.3	...
QB-404 Brazing Temperature	QB-404.1	...
QB-406 Brazing Flux, Gas, or Atmosphere	QB-406.1	...
QB-407 Flow Position	QB-407.1	...
QB-408 Joint Design	QB-408.2	...
	QB-408.4	...
QB-409 Postbraze Heat Treatment	QB-409.1	...
QB-410 Technique	...	QB-410.1
	...	QB-410.2
QB-411 Brazing Time	...	QB-411.1

Copyrighted material licensed to Fermi National Laboratory by Clarivate Analytics (US) LLC, subscriptions.techstreet.com, downloaded on 2020-09-23 17:45:20 +0000 by Fermi National Laboratory User.
No further reproduction or distribution is permitted.

ARTICLE XIII
BRAZING PERFORMANCE QUALIFICATIONS

QB-300 GENERAL

QB-300.1 This Article lists the brazing processes separately, with the essential variables which apply to brazer and brazing operator performance qualifications.

The brazer qualification is limited by the essential variables given for each brazing process. These variables are listed in QB-350, and are defined in Article XIV, Brazing Data. The brazing operator qualification is limited by the essential variables given in QB-350 for each brazing process.

QB-301 TESTS

QB-301.1 Intent of Tests. The performance qualification tests are intended to determine the ability of brazers and brazing operators to make sound braze joints.

QB-301.2 Qualification Tests. Each organization shall qualify each brazer or brazing operator for each brazing process to be used in production brazing. The performance qualification test shall be brazed in accordance with one of any of his qualified Brazing Procedure Specifications (BPS).

The brazer or brazing operator who prepares the BPS qualification test coupons is also qualified within the limits of the performance qualifications, listed in QB-304 for brazers and in QB-305 for brazing operators. He is qualified only for the positions tested in the procedure qualification in accordance with QB-407.

QB-301.3 Identification of Brazers and Brazing Operators. Each qualified brazer and brazing operator shall be assigned an identifying number, letter, or symbol by the organization, which shall be used to identify the work of that brazer or brazing operator.

QB-301.4 Record of Tests. The record of Brazer or Brazing Operator Performance Qualification (BPQ) tests shall include the essential variables (QB-350), the type of tests and the test results, and the ranges qualified in accordance with QB-452 for each brazer and brazing operator. A suggested form for these records is given in Form QB-484 (see Nonmandatory Appendix B).

QB-302 TYPE OF TEST REQUIRED

QB-302.1 Test Specimens. The type and number of test specimens required shall be in accordance with QB-452, and shall be removed in a manner similar to that shown in QB-463.

All test specimens shall meet the requirements prescribed in QB-170 or QB-180, as applicable. Tests for brazing operators shall meet the requirements of QB-305.

QB-302.2 Test Coupons in Pipe. For test coupons made in pipe, specimens shall be removed as shown in Figure QB-463.2(c) at approximately 180 deg apart.

QB-302.3 Combination of Base Metal Thicknesses. When joints are brazed between two base metals of different thicknesses, a performance qualification shall be made for the applicable combination of thicknesses, even though qualification tests have been made for each of the individual base metals brazed to itself. The range of thickness of each of the base metals shall be determined individually per QB-452.

QB-303 LIMITS OF QUALIFIED POSITIONS (19)

(See Figures QB-461.1 and QB-461.2 and Table QB-461.3.)

QB-303.1 For plate, qualification in the flat-flow, vertical-upflow, or horizontal-flow positions shall qualify for the vertical-downflow position.

QB-303.2 For pipe, qualification in either the horizontal-flow or vertical-upflow position shall qualify for the vertical-downflow position.

QB-303.3 Qualification in pipe shall qualify for plate, but not vice versa. Horizontal-flow in pipe shall qualify for flat-flow in plate.

QB-303.4 Special Positions. An organization who does production brazing in a special orientation may make the tests for performance qualification in this specific orientation. Such qualifications are valid only for the flow positions actually tested, except that an angular deviation of ±15 deg is permitted in the inclination of the braze plane, as defined in Figures QB-461.1 and QB-461.2.

QB-304 BRAZERS

Each brazer who brazes under the rules of this Code shall have passed the tests prescribed in QB-302 for performance qualifications.

A brazer qualified to braze in accordance with one qualified BPS is also qualified to braze in accordance with other qualified BPSs, using the same brazing process, within the limits of the essential variables of QB-350.

Copyrighted material licensed to Fermi National Laboratory by Clarivate Analytics (US) LLC, subscriptions.techstreet.com, downloaded on 2020-09-23 17:45:20 +0000 by Fermi National Laboratory User.
No further reproduction or distribution is permitted.

QB-305 BRAZING OPERATORS

The brazing operator who prepares brazing procedure qualification test specimens meeting requirements of QB-451 is thereby qualified. Alternatively, each brazing operator who brazes on vessels constructed under the rules of this Code shall be qualified for each combination of essential variables under which brazing is performed using semiautomatic or automatic processes (such as the resistance, induction, or furnace processes) as follows:

(a) A typical joint or workmanship coupon embodying the requirements of a qualified brazing procedure shall be brazed and sectioned. Typical joints are shown in Figure QB-462.5.

(b) In order to ensure that the operator can carry out the provisions of the brazing procedure, the test sections required in (a) shall meet the requirements of QB-452.

QB-310 QUALIFICATION TEST COUPONS

QB-310.1 Test Coupons. The test coupons may be plate, pipe, or other product forms. The dimensions of the test coupon and length of braze shall be sufficient to provide the required test specimens.

QB-310.2 Braze Joint. The dimensions of the braze joint at the test coupon used in making qualification tests shall be the same as those in the Brazing Procedure Specification (BPS).

QB-310.3 Base Metals. When a brazer or brazing operator is to be qualified, the test coupon shall be base metal of the P-Number or P-Numbers to be joined in production brazing.

QB-320 RETESTS AND RENEWAL OF QUALIFICATION

QB-321 RETESTS

A brazer or brazing operator who fails to meet the requirements for one or more of the test specimens prescribed in QB-452 may be retested under the following conditions.

QB-321.1 Immediate Retest. When an immediate retest is made, the brazer or brazing operator shall make two consecutive test coupons for each position which he has failed, all of which shall pass the test requirements.

QB-321.2 Further Training. When the brazer or brazing operator has had further training or practice, a complete retest shall be made for each position on which he failed to meet the requirements.

QB-322 RENEWAL OF QUALIFICATION

Renewal of qualification of a performance qualification is required

(a) when a brazer or brazing operator has not used the specific brazing process for a period of 6 months or more, or

(b) when there is a specific reason to question his ability to make brazes that meet the specification. Renewal of qualification for a specific brazing process under (a) may be made with specific brazing process by making only one test joint (plate or pipe) with all the essential variables used on any one of the brazer's or brazing operator's previous qualification test joints. This will reestablish the brazer's or brazing operator's qualification for all variables for which he had previously qualified with the specific brazing process.

QB-350 BRAZING VARIABLES FOR BRAZERS AND BRAZING OPERATORS

QB-351 GENERAL

A brazer or brazing operator shall be requalified whenever a change is made in one or more of the essential variables for each brazing process, as follows:

(a) Torch Brazing (TB)
(b) Furnace Brazing (FB)
(c) Induction Brazing (IB)
(d) Resistance Brazing (RB)
(e) Dip Brazing (DB)

QB-351.1 Essential Variables — Manual, Semiautomatic, and Machine Brazing.

(a) QB-402 Base Metal
  (1) QB-402.2
  (2) QB-402.3
(b) QB-403 Brazing Filler Metal
  (1) QB-403.1
  (2) QB-403.2
  (3) QB-403.4
(c) QB-407 Flow Position
  (1) QB-407.1
(d) QB-408 Joint Design
  (1) QB-408.1
  (2) QB-408.3
(e) QB-410 Technique
  (1) QB-410.5

QB-351.2 Essential Variables — Automatic.

(a) A change from automatic to machine brazing.
(b) A change in brazing process.

Copyrighted material licensed to Fermi National Laboratory by Clarivate Analytics (US) LLC, subscriptions.techstreet.com, downloaded on 2020-09-23 17:45:20 +0000 by Fermi National Laboratory User.
No further reproduction or distribution is permitted.

ARTICLE XIV
BRAZING DATA

QB-400 VARIABLES

QB-401 GENERAL

QB-401.1 Each brazing variable described in this Article is applicable as an essential or nonessential variable for procedure qualification when referenced in QB-250 for each specific process. Essential variables for performance qualification are referenced in QB-350 for each specific brazing process. A change from one brazing process to another brazing process is an essential variable and requires requalification.

QB-402 BASE METAL

QB-402.1 A change from a base metal listed under one P-Number in Table QW/QB-422 to any of the following:

(a) a metal listed under another P-Number

(b) any other base metal not listed in Table QW/QB-422

The brazing of dissimilar metals need not be requalified if each base metal involved is qualified individually for the same brazing filler metal, flux, atmosphere, and process. Similarly, the brazing of dissimilar metals qualifies for the individual base metal brazed to itself and for the same brazing filler metal, flux, atmosphere, and process, provided the requirements of QB-153.1(a) are met.

QB-402.2 A change from a base metal listed under one P-Number in Table QW/QB-422 to any of the following:

(a) a metal listed under another P-Number

(b) any other metal not listed in Table QW/QB-422

The brazing of dissimilar metals need not be requalified if each base metal involved is qualified individually for the same brazing filler metal, flux, atmosphere, and process. Similarly, the brazing of dissimilar metals qualifies for the individual base metal brazed to itself and for the same brazing filler metal, flux, atmosphere, and process.

QB-402.3 A change in base metal thickness beyond the range qualified in QB-451 for procedure qualification, or QB-452 for performance qualification.

QB-403 BRAZING FILLER METAL

QB-403.1 A change from one F-Number in Table QB-432 to any other F-Number, or to any other filler metal not listed in Table QB-432.

QB-403.2 A change in filler metal from one product form to another (for example, from preformed ring to paste).

QB-403.3 A change from mechanically fed or manually fed filler metal to preplaced filler metal and vice versa.

QB-403.4 A change from preplaced filler metal to mechanically fed or manually fed filler metal.

QB-404 BRAZING TEMPERATURE

QB-404.1 A change in brazing temperature to a value outside the range specified in the BPS.

QB-406 BRAZING FLUX, FUEL GAS, OR ATMOSPHERE

QB-406.1 The addition or deletion of brazing flux or a change in AWS classification of the flux. Nominal chemical composition or the trade name of the flux may be used as an alternative to the AWS classification.

QB-406.2 A change in the furnace atmosphere from one basic type to another type. For example

(a) reducing to inert

(b) carburizing to decarburizing

(c) hydrogen to disassociated ammonia

QB-406.3 A change in the type of fuel gas(es).

QB-407 FLOW POSITIONS (19)

QB-407.1 The addition of brazing positions other than those already qualified (see Table QB-461.3) shall require requalification if

(a) the brazing filler metal is preplaced or face fed from outside the joint in such a manner that major flow is required to complete the brazed joint, or

(b) the brazing filler metal is preplaced in a joint in such a manner that major flow does occur

QB-407.2 If the brazing filler metal is preplaced in a joint in such a manner that major flow does not occur, then the joint may be brazed in any position without requalification.

QB-408 JOINT DESIGN

QB-408.1 A change in the joint type, i.e., from a butt to a lap or socket, from that qualified. For lap or socket joints, an increase in lap length of more than 25% from

Copyrighted material licensed to Fermi National Laboratory by Clarivate Analytics (US) LLC, subscriptions.techstreet.com, downloaded on 2020-09-23 17:45:20 +0000 by Fermi National Laboratory User.
No further reproduction or distribution is permitted.

the overlap used on the brazer performance qualification test coupon (a decrease in overlap is permitted without requalification).

QB-408.2 A change in the joint clearances to a value outside the range specified in the BPS and as recorded in the PQR.

QB-408.3 A change in the joint clearances to a value outside the range specified in the BPS.

QB-408.4 A change in the joint type, e.g., from a butt to a lap or socket, from that qualified. For lap and socket joints, a decrease in overlap length from the overlap used on the procedure qualification test coupon (an increase in overlap is permitted without requalification).

(19) **QB-409 POSTBRAZE HEAT TREATMENT**

QB-409.1 A separate procedure qualification is required for each of the following:

(a) the addition or deletion of a postbraze heat treatment (PBHT)

(b) a change in the postbraze heat treatment temperature more than ±25°F (±14°C) or a change in postbraze heat treatment time of the greater of 15 min or 10% of the postbraze heat treatment time recorded on the PQR

QB-410 TECHNIQUE

QB-410.1 A change in the method of preparing the base metal, such as mechanical cleaning, coating, plating, or surface treatment by chemical means.

QB-410.2 A change in the method of postbraze cleaning (for example, from chemical cleaning to cleaning by wire brushing or wiping with a wet rag).

QB-410.3 A change in the nature of the flame (for example, a change from neutral or slightly reducing).

QB-410.4 A change in the brazing tip sizes.

QB-410.5 A change from manual to machine or semiautomatic torch brazing, and vice versa.

QB-411 BRAZING TIME

QB-411.1 A change in the brazing time at temperature.

QB-420 P-NUMBERS

(See Part QW, Welding — QW-420.)

QB-430 F-NUMBERS

QB-431 GENERAL

The following F-Number grouping of brazing filler metals in Table QB-432 is based essentially on their usability characteristics, which fundamentally determine the ability of brazers and brazing operators to make satisfactory brazements with a given filler metal. This grouping is made to reduce the number of brazing procedure and performance qualifications, where this can logically be done. The grouping does not imply that filler metals within a group may be indiscriminately substituted for a filler metal which was used in the qualification test without consideration of the compatibility from the standpoint of metallurgical properties, design, mechanical properties, postbraze heat treatment, and service requirements.

Table QB-432
F-Numbers
Grouping of Brazing Filler Metals for Procedure and Performance Qualification SFA-5.8

QB	F-No.	AWS Classification No.
432.1	101	BAg-1
		BAg-1a
		BAg-8
		BAg-8a
		BAg-22
		BAg-23
		BVAg-0
		BVAg-8
		BVAg-8b
		BVAg-30

Copyrighted material licensed to Fermi National Laboratory by Clarivate Analytics (US) LLC, subscriptions.techstreet.com, downloaded on 2020-09-23 17:45:20 +0000 by Fermi National Laboratory User.
No further reproduction or distribution is permitted.

Table QB-432
F-Numbers
Grouping of Brazing Filler Metals for Procedure and Performance Qualification SFA-5.8 (Cont'd)

QB	F-No.	AWS Classification No.
432.2	102	BAg-2
		BAg-2a
		BAg-3
		BAg-4
		BAg-5
		BAg-6
		BAg-7
		BAg-9
		BAg-10
		BAg-13
		BAg-13a
		BAg-18
		BAg-19
		BAg-20
		BAg-21
		BAg-24
		BAg-26
		BAg-27
		BAg-28
		BAg-33
		BAg-34
		BAg-35
		BAg-36
		BAg-37
		BVAg-6b
		BVAg-8
		BVAg-8a
		BVAg-18
		BVAg-29
		BVAg-31
		BVAg-32
432.3	103	BCuP-2
		BCuP-3
		BCuP-4
		BCuP-5
		BCuP-6
		BCuP-7
		BCuP-8
		BCuP-9
432.4	104	BAlSi-2
		BAlSi-3
		BAlSi-4
		BAlSi-5
		BAlSi-7
		BAlSi-9
		BAlSi-11
432.5	105	BCu-1
		BCu-1a
		BCu-2
		BCu-3
		BVCu-1a
		BVCu-1b
432.6	106	RBCuZn-A
		RBCuZn-B
		RBCuZn-C
		RBCuZn-D

Copyrighted material licensed to Fermi National Laboratory by Clarivate Analytics (US) LLC, subscriptions.techstreet.com, downloaded on 2020-09-23 17:45:20 +0000 by Fermi National Laboratory User.
No further reproduction or distribution is permitted.

Table QB-432
F-Numbers
Grouping of Brazing Filler Metals for Procedure and Performance Qualification SFA-5.8 (Cont'd)

QB	F-No.	AWS Classification No.
432.7	107	BNi-1
		BNi-1a
		BNi-2
		BNi-3
		BNi-4
		BNi-5
		BNi-5a
		BNi-5b
		BNi-6
		BNi-7
		BNi-8
		BNi-9
		BNi-10
		BNi-11
		BNi-12
		BNi-13
432.8	108	BAu-1
		BAu-2
		BAu-3
		BAu-4
		BAu-5
		BAu-6
		BVAu-2
		BVAu-3
		BVAu-4
		BVAu-7
		BVAu-8
		BVAu-9
		BVAu-10
432.9	109	BMg-1
432.10	110	BCo-1
432.11	111	BVPd-1

Copyrighted material licensed to Fermi National Laboratory by Clarivate Analytics (US) LLC, subscriptions.techstreet.com, downloaded on 2020-09-23 17:45:20 +0000 by Fermi National Laboratory User.
No further reproduction or distribution is permitted.

QB-450 SPECIMENS

QB-451 PROCEDURE QUALIFICATION SPECIMENS

Table QB-451.1
Tension Tests and Transverse-Bend Tests — Butt and Scarf Joints

Thickness *T* of Test Coupon as Brazed, in. (mm)	Range of Thickness of Materials Qualified by Test Plate or Pipe, in. (mm)		Type and Number of Test Specimens Required		
	Min.	Max.	Tension [Note (1)]	First Surface Bend [Note (2)]	Second Surface Bend [Note (2)]
Less than 1/8 (3)	0.5*T*	2*T*	2	2	2
1/8 to 3/8 (3 to 10), incl.	1/16 (1.5)	2*T*	2	2	2
Over 3/8 (10)	3/16 (5)	2*T*	2 [Note (3)]	2	2

NOTES:
(1) For specimen dimensions, see Figure QB-462.1(a) for plate specimens, or Figure QB-462.1(b)for pipe specimens. For pipe specimens not greater than NPS 3 (DN 75), full section testing may be substituted; see Figure QB-462.1(e).
(2) For specimen dimensions, see Figure QB-462.2(a). For specimen removal, see Figure QB-463.1(a) for plate coupons, or Figure QB-463.1(e) for pipe coupons.
(3) See QB-151 for details on multiple specimens when coupon thicknesses are over 1 in. (25 mm).

Table QB-451.2
Tension Tests and Longitudinal Bend Tests — Butt and Scarf Joints

Thickness *T* of Test Coupon as Brazed, in. (mm)	Range of Thickness of Materials Qualified by Test Plate or Pipe, in. (mm)		Type and Number of Test Specimens Required		
	Min.	Max.	Tension [Note (1)]	First Surface Bend [Note (2)]	Second Surface Bend [Note (2)]
Less than 1/8 (3)	0.5*T*	2*T*	2	2	2
1/8 to 3/8 (3 to 10), incl.	1/16 (1.5)	2*T*	2	2	2
Over 3/8 (10)	3/16 (5)	2*T*	2 [Note (3)]	2	2

NOTES:
(1) For specimen dimensions, see Figure QB-462.1(a) for plate specimens, or Figure QB-462.1(b)for pipe specimens. For pipe specimens not greater than NPS 3 (DN 75), full section testing may be substituted; see Figure QB-462.1(e).
(2) For specimen dimensions, see Figures QB-462.2(b) and QB-463.1(b) for specimen removal.
(3) See QB-151 for details on multiple specimens when coupon thicknesses are over 1 in. (25 mm).

Copyrighted material licensed to Fermi National Laboratory by Clarivate Analytics (US) LLC, subscriptions.techstreet.com, downloaded on 2020-09-23 17:45:20 +0000 by Fermi National Laboratory User.
No further reproduction or distribution is permitted.

Table QB-451.3
Tension Tests and Peel Tests — LAP Joints

Thickness T of Test Coupon as Brazed, in. (mm)	Range of Thickness of Materials Qualified by Test Plate or Pipe, in. (mm)		Type and Number of Test Specimens Required [Note (1)]	
	Min.	Max.	Tension [Note (2)]	Peel [Note (3)] and [Note (4)]
Less than $^1/_8$ (3)	$0.5T$	$2T$	2	2
$^1/_8$ to $^3/_8$ (3 to 10), incl.	$^1/_{16}$ (1.5)	$2T$	2	2
Over $^3/_8$ (10)	$^3/_{16}$ (5)	$2T$	2	2

NOTES:
(1) When materials of a representative geometry and thickness are not available to prepare butt or lap joint test coupons, workmanship coupons may be prepared and examined per QB-451.5 to establish the range of thickness of base metal qualified. When this is done, the properties of the joint shall be validated using butt or lap joint test coupons of any thickness.
(2) For specimen dimensions, see Figure QB-462.1(c). For pipe specimens not greater than NPS 3 (DN 75), full section testing may be substituted; see Figure QB-462.1(e).
(3) For peel specimens, see Figure QB-462.3 for specimen dimensions, and Figure QB-463.1(d) for specimen removal.
(4) Sectioning tests may be substituted for peel tests. For section specimens, see Figure QB-462.4 for specimen dimensions, and Figure QB-463.1(c) for specimen removal.

Table QB-451.4
Tension Tests and Section Tests — Rabbet Joints

Thickness T of Test Coupon as Brazed, in. (mm)	Range of Thickness of Materials Qualified by Test Plate or Pipe, in. (mm)		Type and Number of Test Specimens Required	
	Min.	Max.	Tension [Note (1)]	Tension [Note (2)]
Less than $^1/_8$ (3)	$0.5T$	$2T$	2	2
$^1/_8$ to $^3/_8$ (3 to 10), incl.	$^1/_{16}$ (1.5)	$2T$	2	2
Over $^3/_8$ (10)	$^3/_{16}$ (5)	$2T$	2	2

NOTES:
(1) For specimen dimensions, see Figure QB-462.1(c). For pipe specimens not greater than NPS 3 (DN 75), full section testing may be substituted; see Figure QB-462.1(e).
(2) For specimen dimensions, see Figures QB-462.4 and QB-463.1(c) for specimen removal.

Copyrighted material licensed to Fermi National Laboratory by Clarivate Analytics (US) LLC, subscriptions.techstreet.com, downloaded on 2020-09-23 17:45:20 +0000 by Fermi National Laboratory User.
No further reproduction or distribution is permitted.

Table QB-451.5
Section Tests — Workmanship Coupon Joints

Thickness T of Test Coupon as Brazed, in. (mm)	Range of Thickness of Materials Qualified by Test Plate or Pipe, in. (mm)		Type and Number of Test Specimens Required
	Min.	Max.	Section, QB-462.5 [Note (1)]
Less than $^1/_8$ (3)	$0.5T$	$2T$	2
$^1/_8$ to $^3/_8$ (3 to 10), incl.	$^1/_{16}$ (1.5)	$2T$	2
Over $^3/_8$ (10)	$^3/_{16}$ (5)	$2T$	2

NOTE:

(1) This test in itself does not constitute procedure qualification but must be validated by conductance of tests of butt or lap joints as appropriate. For joints connecting tension members, such as the stay or partition type in QB-462.5, the validation data may be based upon butt joints; for joints connecting members in shear, such as saddle or spud joints, the validation data may be based on lap joints.

Copyrighted material licensed to Fermi National Laboratory by Clarivate Analytics (US) LLC, subscriptions.techstreet.com, downloaded on 2020-09-23 17:45:20 +0000 by Fermi National Laboratory User.
No further reproduction or distribution is permitted.

QB-452 PERFORMANCE QUALIFICATION SPECIMENS

Table QB-452.1
Peel or Section Tests — Butt, Scarf, Lap, Rabbet Joints

Thickness *T* of Test Coupon as Brazed, in. (mm)	Range of Thickness of Materials Qualified by Test Plate or Pipe, in. (mm)		Type and Number of Test Specimens Required
	Min.	Max.	Peel, QB-462.3 or section, QB-462.4 [Note (1)], [Note (2)], and [Note (3)]
Less than 1/8 (3)	0.5*T*	2*T*	2
1/8 to 3/8 (3 to 10), incl.	1/16 (1.5)	2*T*	2
Over 3/8 (10)	3/16 (5)	2*T*	2

NOTES:
(1) Sectioning tests may be substituted for the peel test when the peel test is impractieal to perform (e.g., when the strength of the brazing filler metal is equal to or greater than the strength of the base metals).
(2) For specimen dimensions, see Figure QB-462.3 for peel test specimens or Figure QB-462.4 for section specimens.
(3) For specimen removal, see Figure QB-463.2(a) for section specimens or Figure QB-463.2(b) for peel specimens from plate coupons, or Figure QB-463.2(c) for pipe coupons.

Table QB-452.2
Section Tests — Workmanship Specimen Joints

Thickness *T* of Test Coupon as Brazed, in. (mm)	Range of Thickness of Materials Qualified by Test Plate or Pipe, in. (mm)		Type and Number of Test Specimens Required
	Min.	Max.	Section, QB-462.5
Less than 1/8 (3)	0.5*T*	2*T*	1
1/8 to 3/8 (3 to 10), incl.	1/16 (1.5)	2*T*	1
Over 3/8 (10)	3/16 (5)	2*T*	1

Copyrighted material licensed to Fermi National Laboratory by Clarivate Analytics (US) LLC, subscriptions.techstreet.com, downloaded on 2020-09-23 17:45:20 +0000 by Fermi National Laboratory User.
No further reproduction or distribution is permitted.

QB-460 GRAPHICS

Figure QB-461.1
Flow Positions

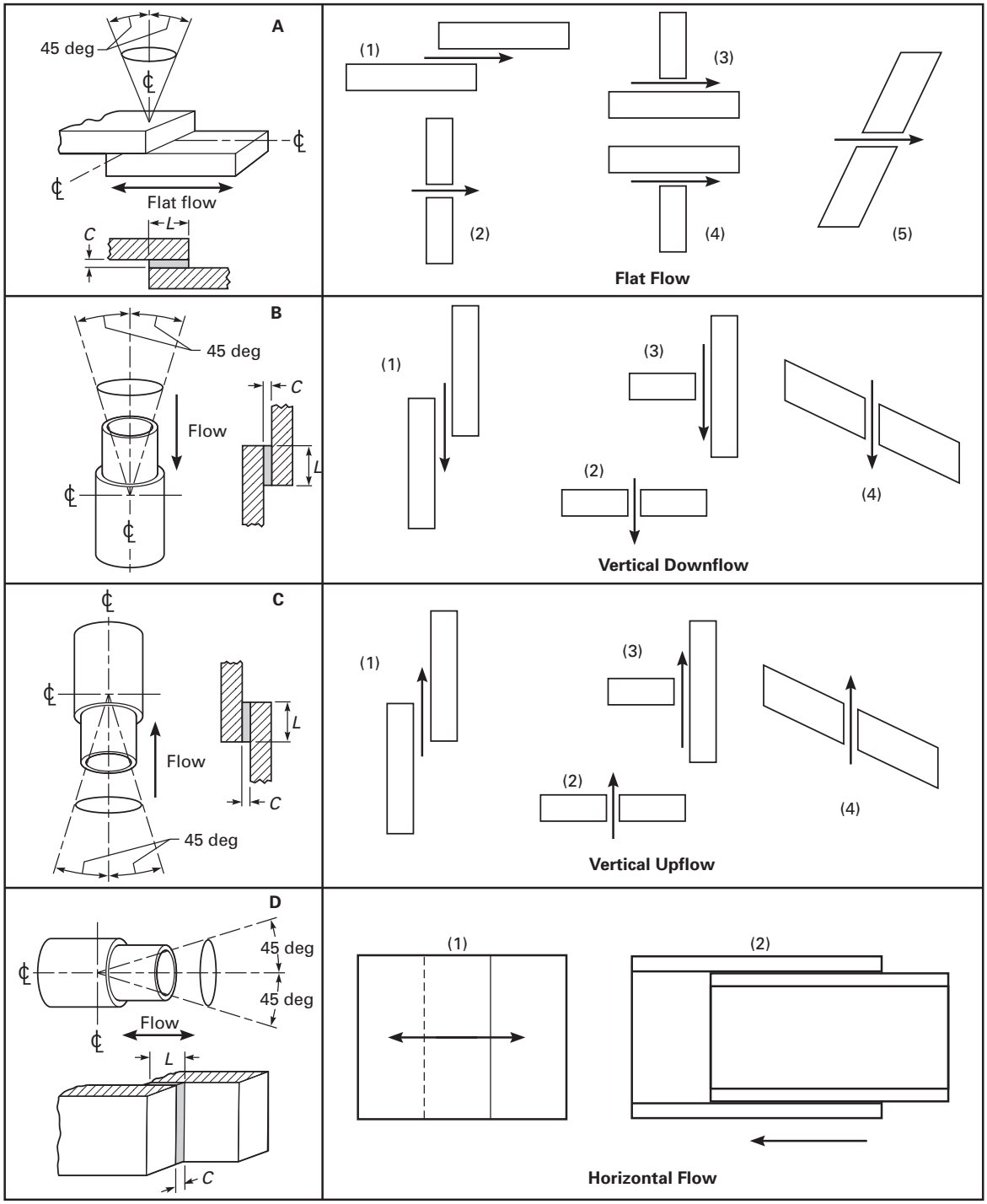

GENERAL NOTES:
(a) C = joint clearance
(b) L = length of lap or thickness

Copyrighted material licensed to Fermi National Laboratory by Clarivate Analytics (US) LLC, subscriptions.techstreet.com, downloaded on 2020-09-23 17:45:20 +0000 by Fermi National Laboratory User.
No further reproduction or distribution is permitted.

Figure QB-461.2
Test Flow Positions

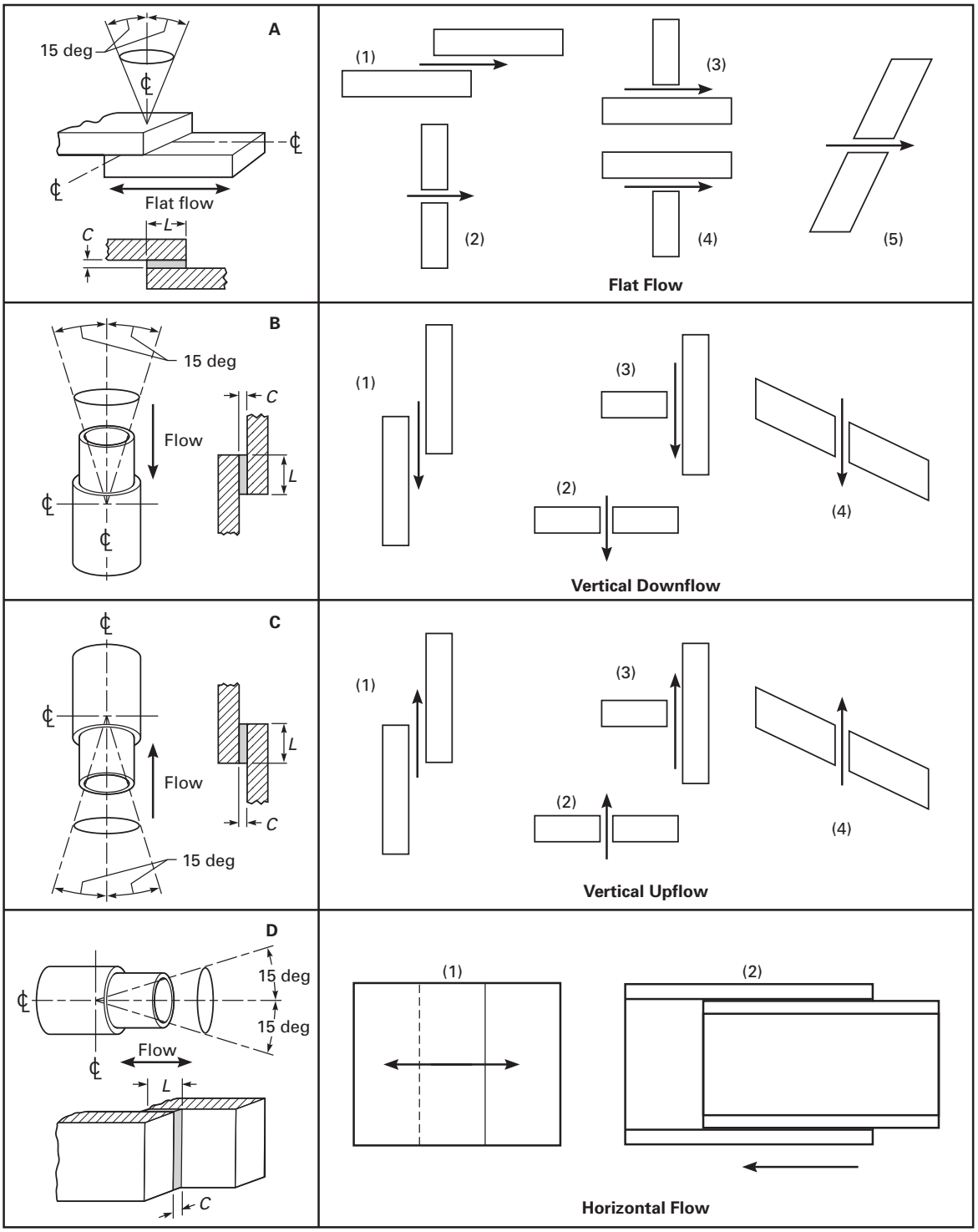

GENERAL NOTES:
(a) C = joint clearance
(b) L = length of lap or thickness

Copyrighted material licensed to Fermi National Laboratory by Clarivate Analytics (US) LLC, subscriptions.techstreet.com, downloaded on 2020-09-23 17:45:20 +0000 by Fermi National Laboratory User.
No further reproduction or distribution is permitted.

(19)

Table QB-461.3
Procedure and Performance Qualification Position Limitations
(As Given in QB-203 and QB-303)

Coupon Type	Test Flow Position [Note (1)]	Qualified Flow Position [Note (2)]	
		Plate	Pipe
Plate	Flat	Flat, vertical down	None
	Vertical down	Vertical down	None
	Vertical up	Vertical up, vertical down	None
	Horizontal	Horizontal, vertical down	None
Pipe	Vertical down	Vertical down	Vertical down
	Vertical up	Vertical up, vertical down	Vertical up, vertical down
	Horizontal	Flat, horizontal, vertical down	Horizontal, vertical down

NOTES:
(1) Brazing qualification test flow positions are described in QB-121 through QB-124 and shown in Figure QB-461.2.
(2) Qualified brazing positions are shown in Figure QB-461.1.

Figure QB-462.1(a)
Tension — Reduced Section for Butt and Scarf Joints — Plate

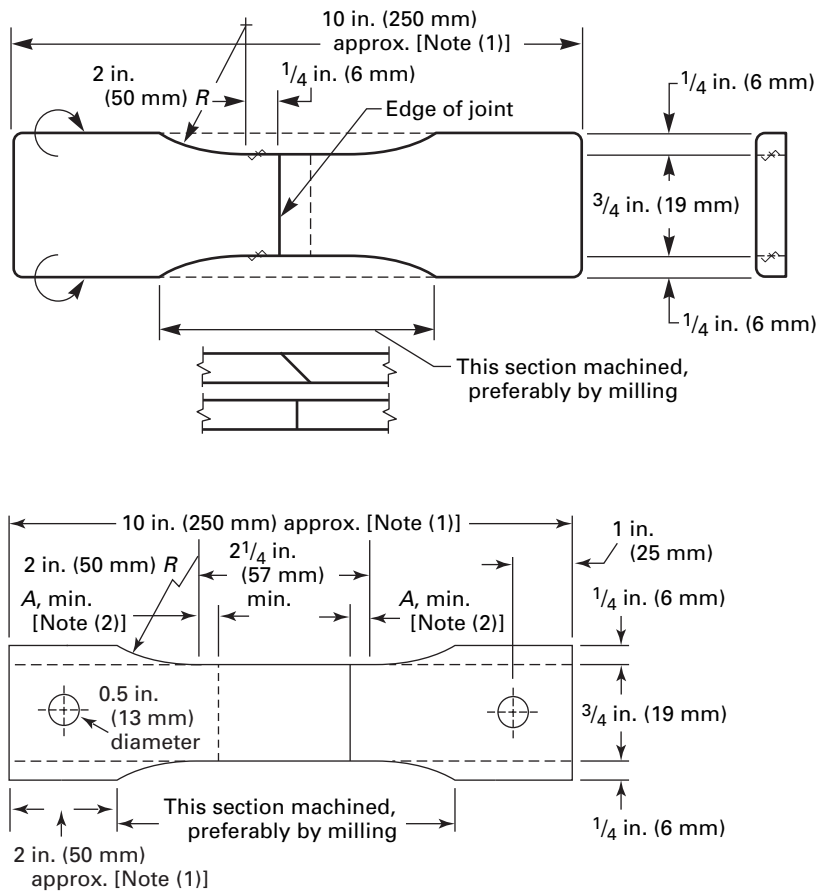

Alternate Pin-Loaded Specimen

Copyrighted material licensed to Fermi National Laboratory by Clarivate Analytics (US) LLC, subscriptions.techstreet.com, downloaded on 2020-09-23 17:45:20 +0000 by Fermi National Laboratory User.
No further reproduction or distribution is permitted.

Figure QB-462.1(a)
Tension — Reduced Section for Butt and Scarf Joints — Plate (Cont'd)

NOTES:
(1) Length may vary to fit testing machine.
(2) A = greater of $^1/_4$ in. (6 mm) or $2T$

Figure QB-462.1(b)
Tension — Reduced Section for Butt, Lap, and Scarf Joints — Pipe

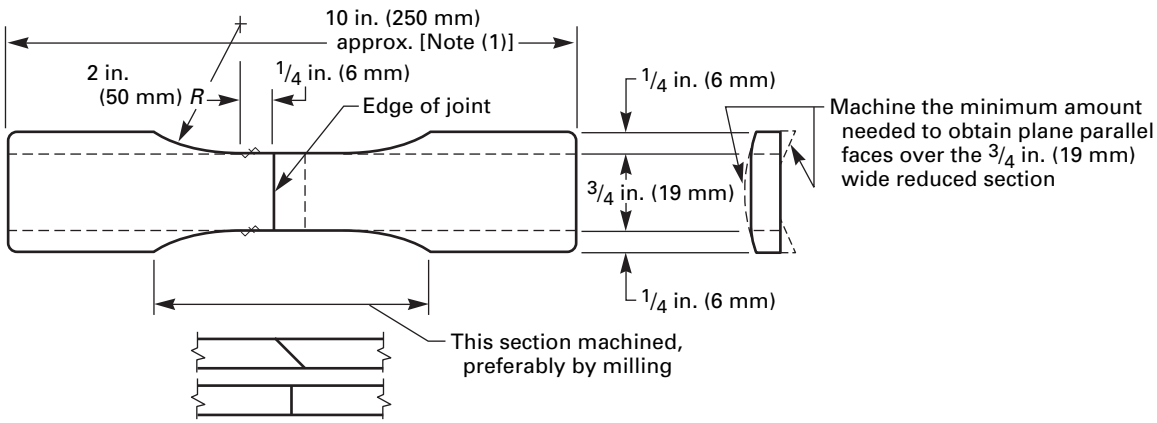

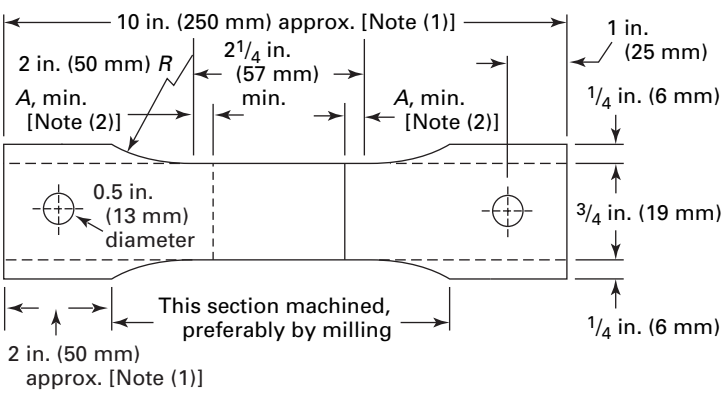

Alternate Pin-Loaded Specimen

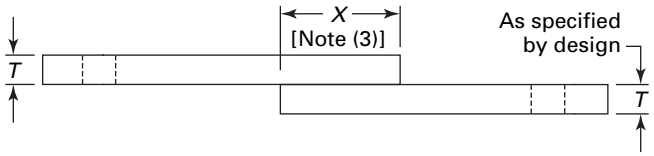

For Lap Joints

NOTES:
(1) Length may vary to fit testing machine.
(2) A = greater of $^1/_4$ in. (6 mm) or $2T$
(3) X = test specimen overlap

Copyrighted material licensed to Fermi National Laboratory by Clarivate Analytics (US) LLC, subscriptions.techstreet.com, downloaded on 2020-09-23 17:45:20 +0000 by Fermi National Laboratory User.
No further reproduction or distribution is permitted.

Figure QB-462.1(c)
Tension — Reduced Section for Lap and Rabbet Joints — Plate

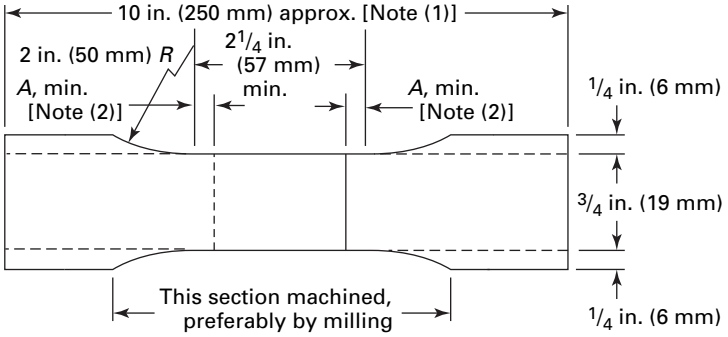

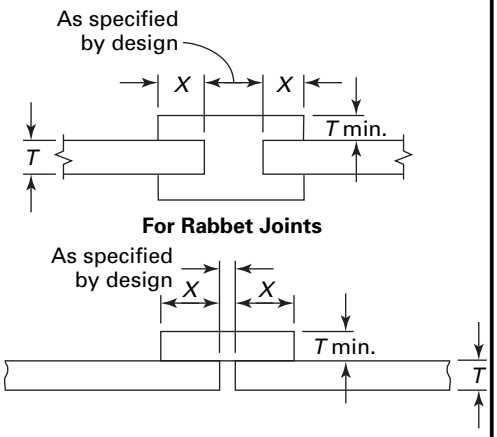

For Rabbet Joints

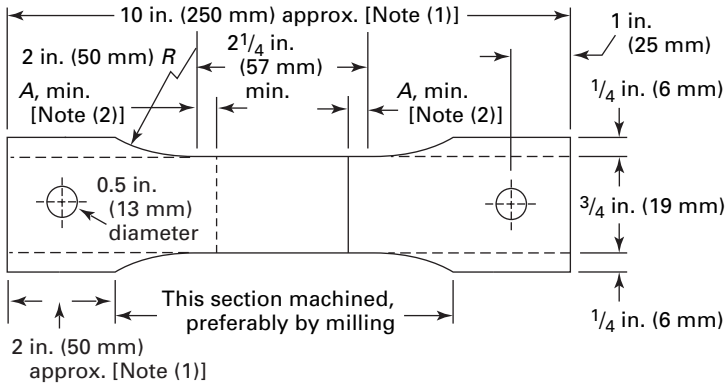

Alternate Pin-Loaded Specimen

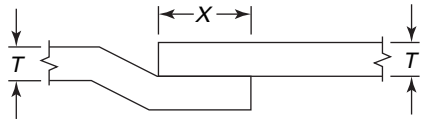

Alternate Designs

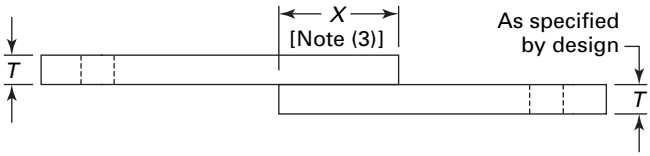

For Lap Joints

NOTES:
(1) Length may vary to fit testing machine.
(2) A = greater of $^1/_4$ in. (6 mm) or $2T$
(3) X = test specimen overlap

Copyrighted material licensed to Fermi National Laboratory by Clarivate Analytics (US) LLC, subscriptions.techstreet.com, downloaded on 2020-09-23 17:45:20 +0000 by Fermi National Laboratory User.
No further reproduction or distribution is permitted.

Figure QB-462.1(e)
Tension — Full Section for Lap, Scarf, and Butt Joints — Small Diameter Pipe

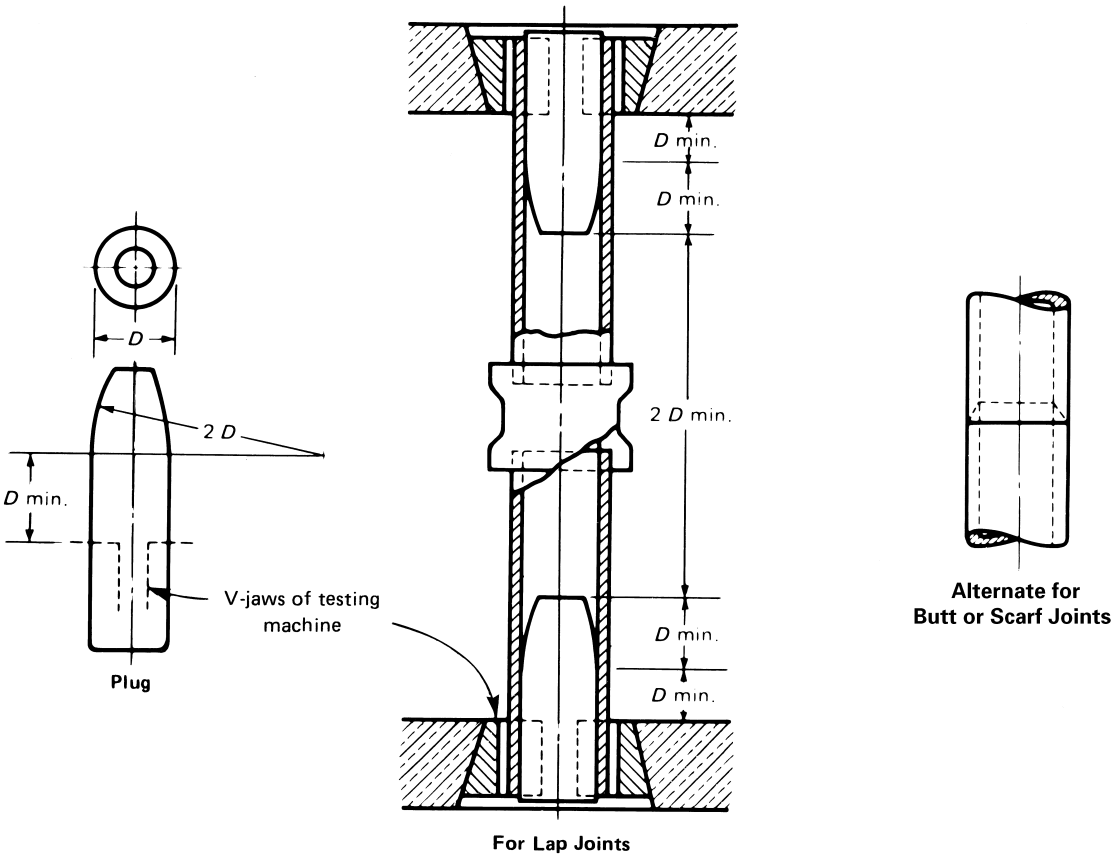

Copyrighted material licensed to Fermi National Laboratory by Clarivate Analytics (US) LLC, subscriptions.techstreet.com, downloaded on 2020-09-23 17:45:20 +0000 by Fermi National Laboratory User.
No further reproduction or distribution is permitted.

Figure QB-462.1(f)
Support Fixture for Reduced-Section Tension Specimens

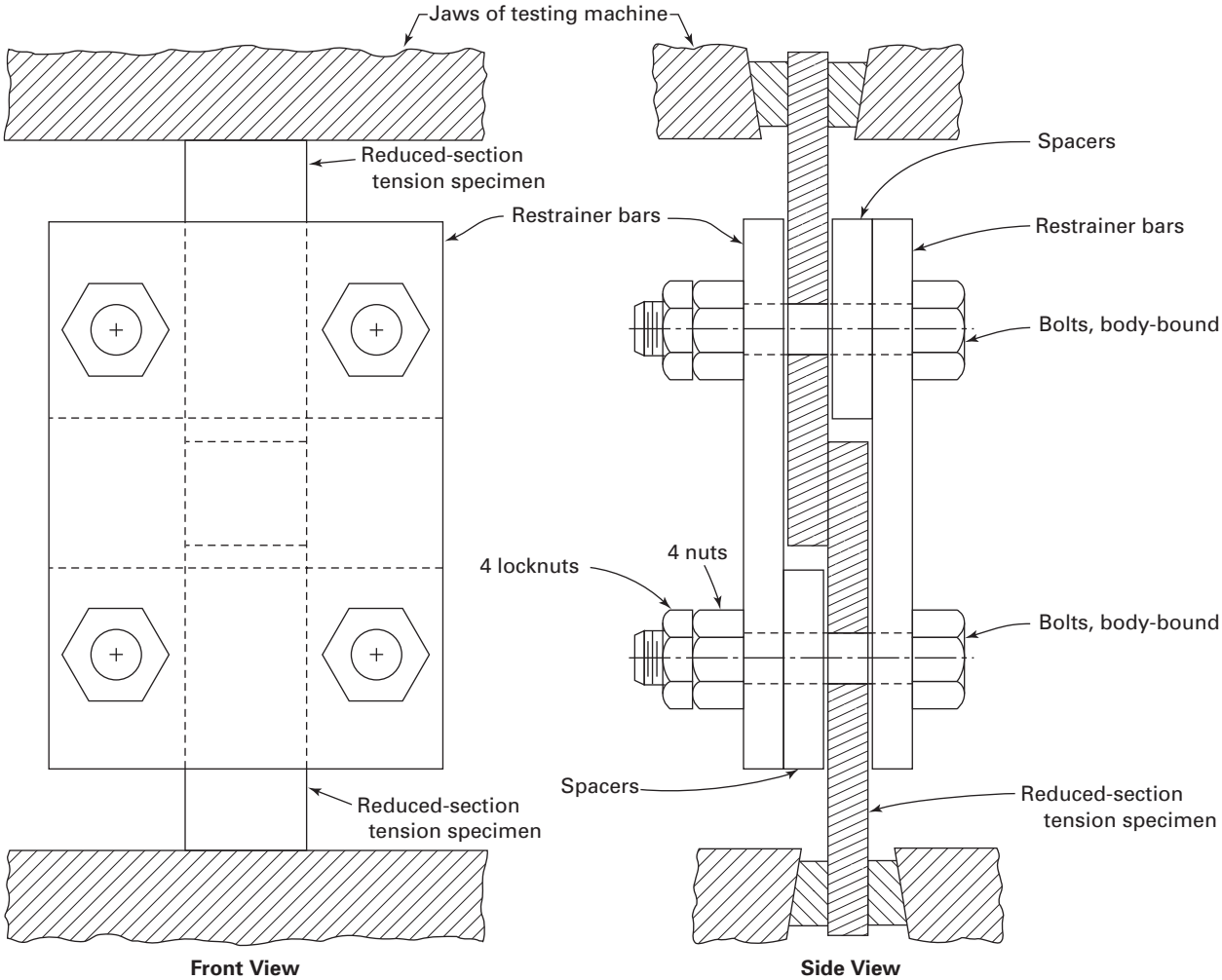

GENERAL NOTE: The restraining fixture is intended to provide a snug fit between the fixture and the contour of the tension specimen. The fixture shall be tightened, but only to the point where a minimum of 0.001 in. (0.03 mm) clearance exists between the sides of the fixture and the tension specimen.

Copyrighted material licensed to Fermi National Laboratory by Clarivate Analytics (US) LLC, subscriptions.techstreet.com, downloaded on 2020-09-23 17:45:20 +0000 by Fermi National Laboratory User.
No further reproduction or distribution is permitted.

Figure QB-462.2(a)
Transverse First and Second Surface Bends — Plate and Pipe

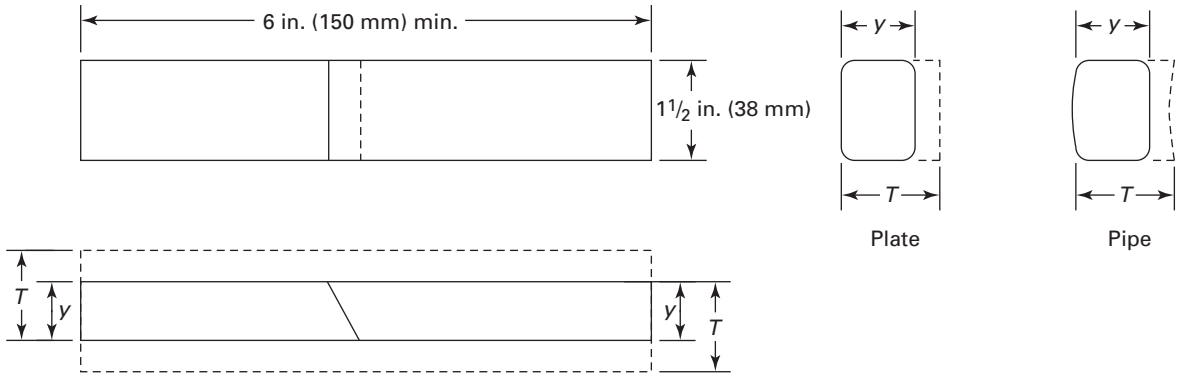

T, in. (mm)	*y*, in. (mm)
	All ferrous and nonferrous materials
1/16 – 3/8 (1.5–10)	*T*
>3/8 (>10)	3/8 (10)

GENERAL NOTE: For the first surface bend specimens, machine from the second surface as necessary until the required thickness is obtained. For second surface bend specimens, machine from the first surface as necessary until the required thickness is obtained.

Figure QB-462.2(b)
Longitudinal First and Second Surface Bends — Plate

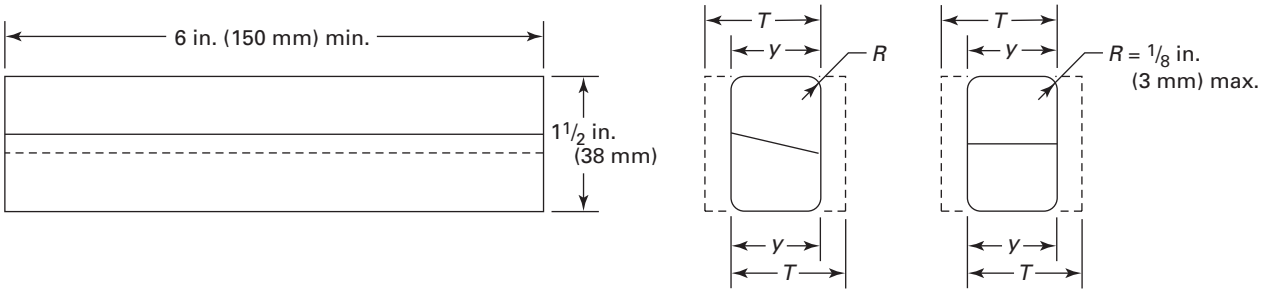

T, in. (mm)	*y*, in. (mm)
	All ferrous and nonferrous materials
1/16 – 3/8 (1.5–10)	*T*
>3/8 (>10)	3/8 (10)

GENERAL NOTE: For the first surface bend specimens, machine from the second surface as necessary until the required thickness is obtained. For second surface bend specimens, machine from the first surface as necessary until the required thickness is obtained.

Copyrighted material licensed to Fermi National Laboratory by Clarivate Analytics (US) LLC, subscriptions.techstreet.com, downloaded on 2020-09-23 17:45:20 +0000 by Fermi National Laboratory User.
No further reproduction or distribution is permitted.

Figure QB-462.3
Lap Joint Peel Specimen

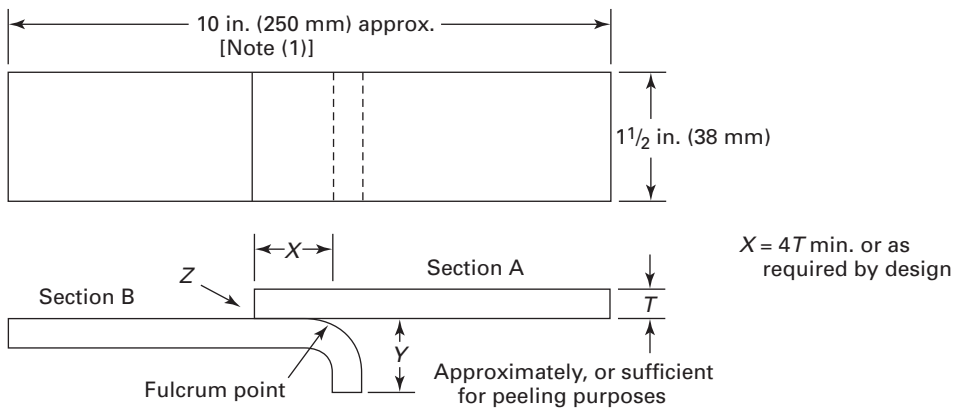

GENERAL NOTES:
(a) Flange Y may be omitted from Section B when "peeling" is to be accomplished in a suitable tension machine.
(b) Specimen shall be brazed from side marked Z.

NOTE:
(1) Length may vary to fit testing machine.

Figure QB-462.4
Lap Joint Section Specimen (See QB-181)

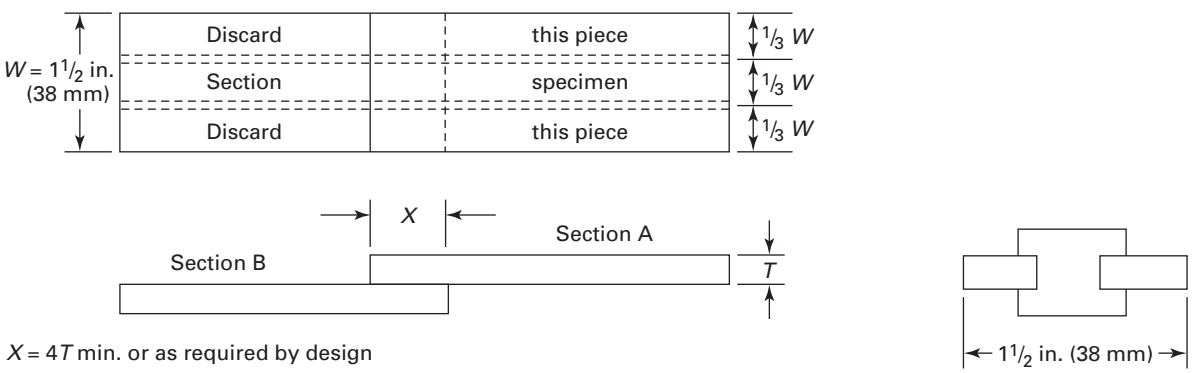

Alternate for Rabbet Joint

GENERAL NOTE: Lap or socket joint specimens in the pipe and tube shall be sectioned by cutting the pipe or tube specimen in half lengthwise, and the cut edges of at least one-half prepared and examined.

Copyrighted material licensed to Fermi National Laboratory by Clarivate Analytics (US) LLC, subscriptions.techstreet.com, downloaded on 2020-09-23 17:45:20 +0000 by Fermi National Laboratory User.
No further reproduction or distribution is permitted.

Figure QB-462.5
Workmanship Coupons

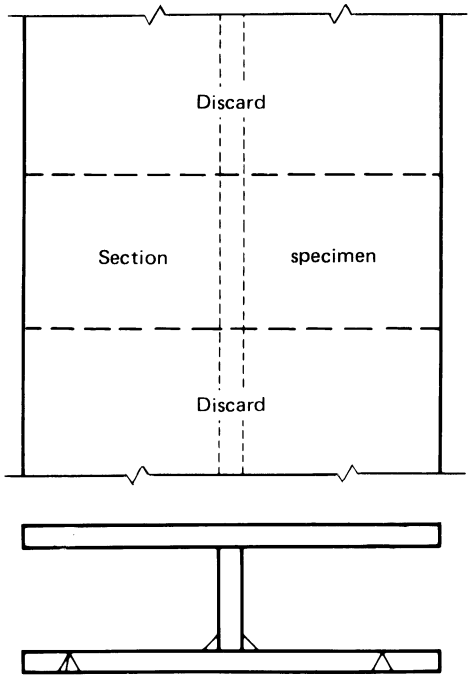

(a) Typical Stay or Partition Joint

[Note (1)]

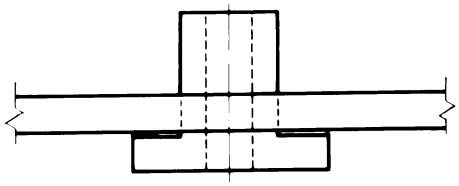

(b) Typical Spud Joint

[Note (2)]

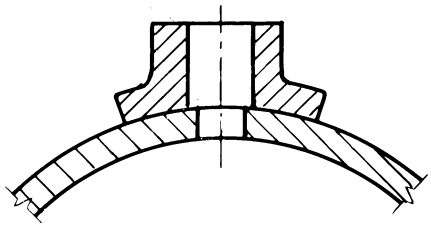

(c) Typical Saddle Joint Sectioned

[Note (2)]

NOTES:
(1) Workmanship coupons shall be 10 in. (250 mm) in length or represent one-half the typical joint, whichever is less.
(2) Circular coupons shall be sectioned in half, and one-half shall be used as the test specimen.

Copyrighted material licensed to Fermi National Laboratory by Clarivate Analytics (US) LLC, subscriptions.techstreet.com, downloaded on 2020-09-23 17:45:20 +0000 by Fermi National Laboratory User.
No further reproduction or distribution is permitted.

QB-463 ORDER OF REMOVAL

Figure QB-463.1(a)
Plates Procedure Qualification

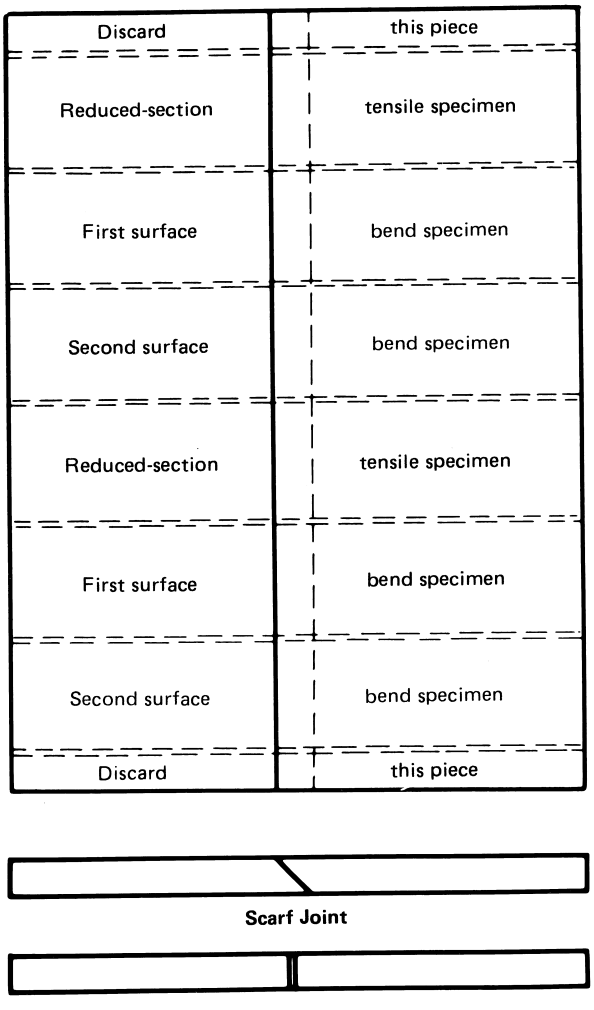

Figure QB-463.1(b)
Plates Procedure Qualification

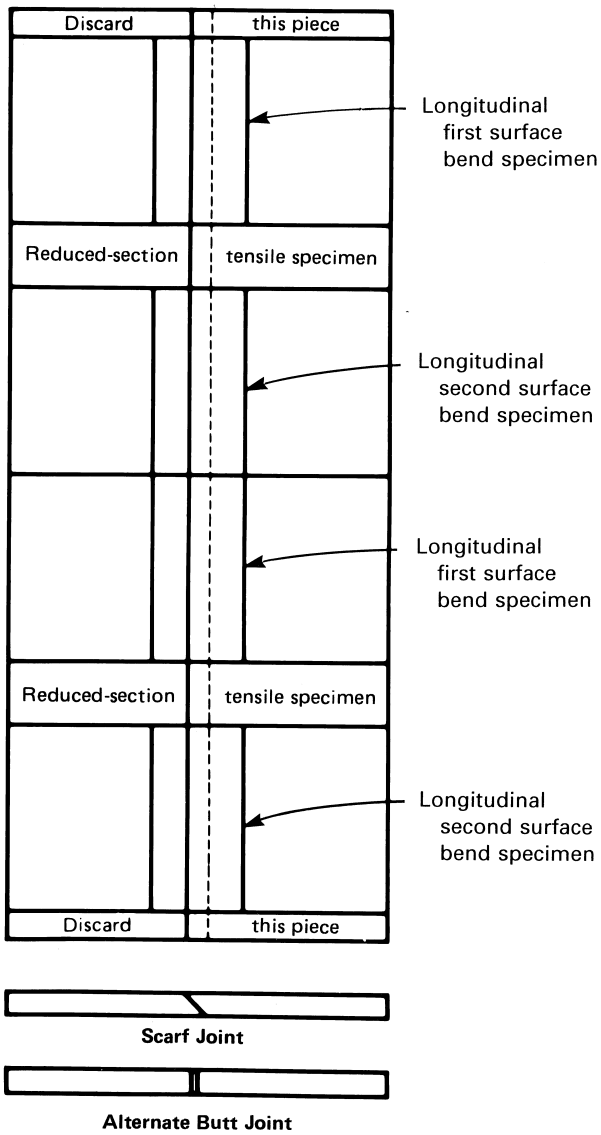

Copyrighted material licensed to Fermi National Laboratory by Clarivate Analytics (US) LLC, subscriptions.techstreet.com, downloaded on 2020-09-23 17:45:20 +0000 by Fermi National Laboratory User.
No further reproduction or distribution is permitted.

Figure QB-463.1(c)
Plates Procedure Qualification

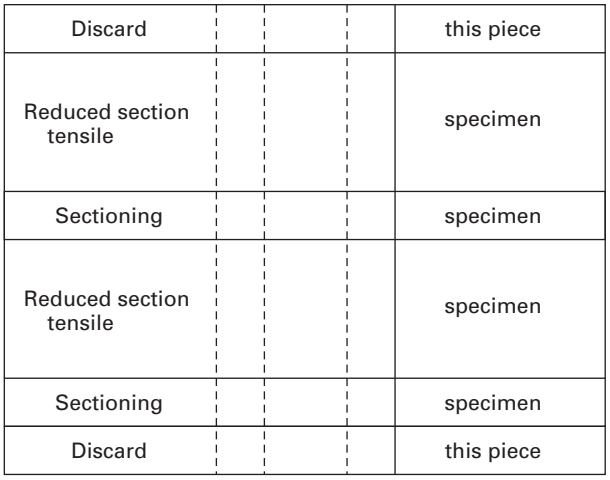

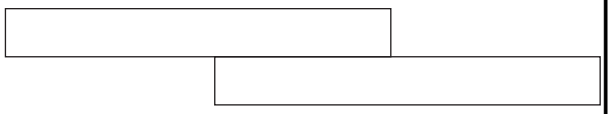

Alternate Lap Joint
[Note (2)]

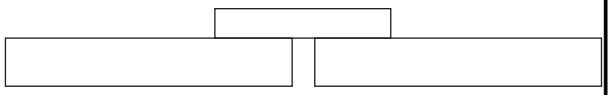

Alternate Lap Joint
[Note (2)]

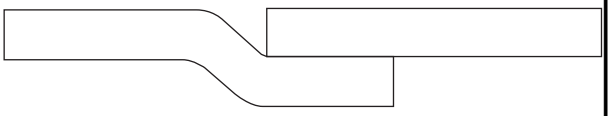

Alternate Lap Joint
[Note (2)]

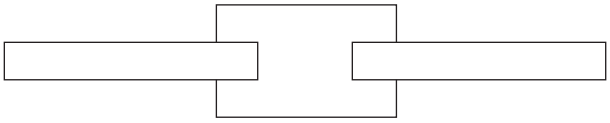

Rabbet Joint
[Note (1)]

NOTES:
(1) Required for rabbet joints.
(2) The sectioning specimen in this view may be used as an alternate to sectioning the peel test specimens of Figure QB-463.1(d) when the peel test cannot be used. This section test specimen should be approximately $^1/_2$ in. (13 mm) wide.

Copyrighted material licensed to Fermi National Laboratory by Clarivate Analytics (US) LLC, subscriptions.techstreet.com, downloaded on 2020-09-23 17:45:20 +0000 by Fermi National Laboratory User.
No further reproduction or distribution is permitted.

Figure QB-463.1(d)
Plates Procedure Qualification

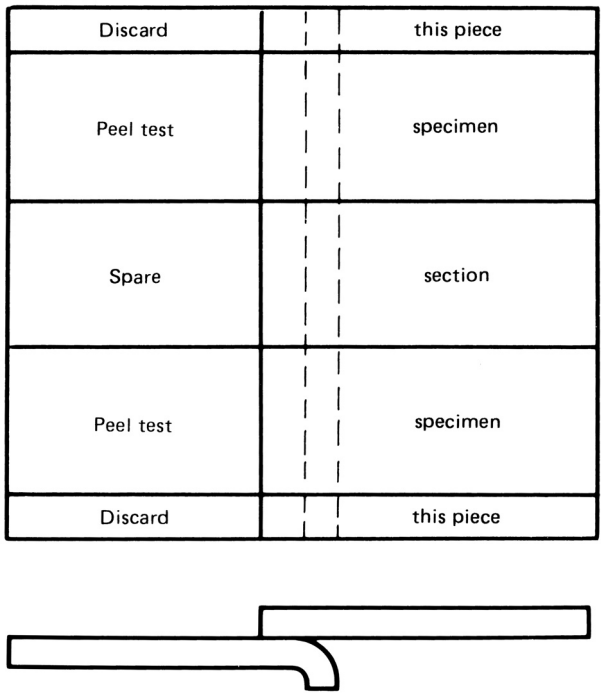

Lap Joint [Note (1)]

NOTE:
(1) Required when peel test can be used.

Copyrighted material licensed to Fermi National Laboratory by Clarivate Analytics (US) LLC, subscriptions.techstreet.com, downloaded on 2020-09-23 17:45:20 +0000 by Fermi National Laboratory User.
No further reproduction or distribution is permitted.

Figure QB-463.1(e)
Pipe — Procedure Qualification

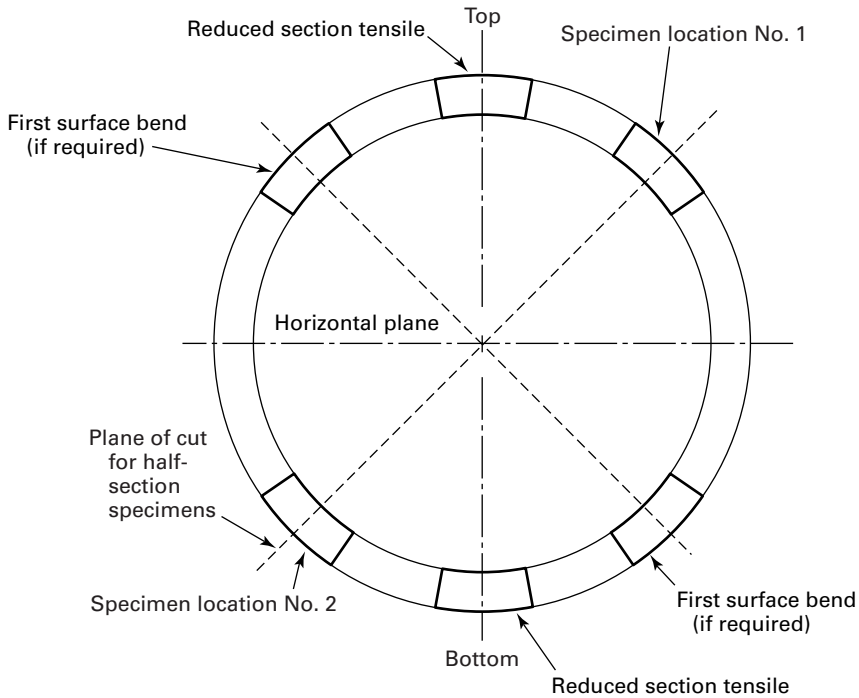

GENERAL NOTES:

(a) Figure shown is for coupons over 3 in. (75 mm) O.D. Locations No. 1 and 2 are for:
  (1) second surface specimens for butt and scarf joints
  (2) peel or section specimens for lap joints
  (3) section specimens for rabbet joints

(b) For coupons 3 in. (75 mm) O.D. and smaller, two coupons shall be brazed and one specimen shall be removed from each coupon. If brazed in the horizontal flow position, the specimen shall be taken at specimen location No. 1. Alternatively, each coupon shall be cut longitudinally and the specimen shall consist of both sides of one half-section of each coupon.

(c) When coupon is brazed in the horizontal flow position, specimens locations shall be as shown relative to the horizontal plane of the coupon, and for half-section specimens, plane of cut shall be oriented as shown relative to the horizontal plane of the coupon.

(d) When both ends of a coupling are brazed, each end is considered a separate test coupon.

Copyrighted material licensed to Fermi National Laboratory by Clarivate Analytics (US) LLC, subscriptions.techstreet.com, downloaded on 2020-09-23 17:45:20 +0000 by Fermi National Laboratory User.
No further reproduction or distribution is permitted.

Figure QB-463.2(a)
Plates Performance Qualification

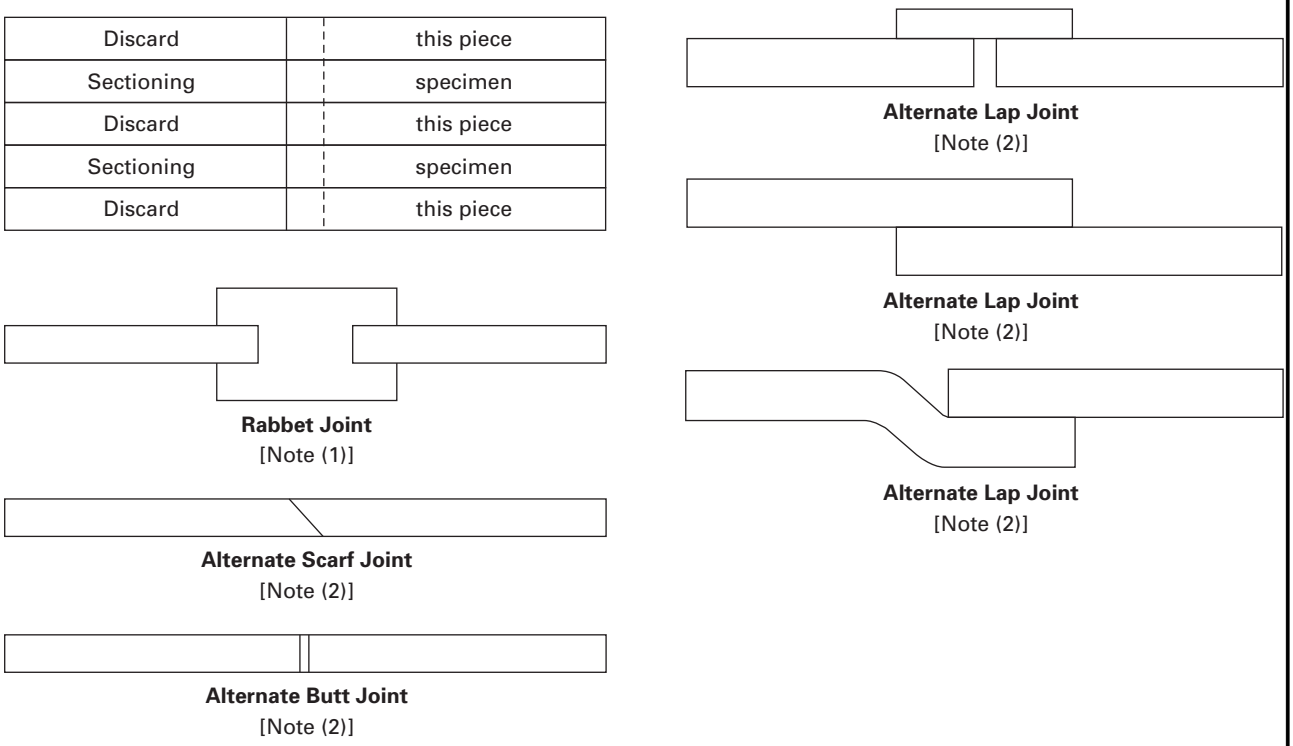

NOTES:
(1) Required for rabbet joints.
(2) The sectioning specimen in this view may be used as an alternate to sectioning the peel test specimens of Figure QB-463.2(b) when the peel test cannot be used. This section test specimen should be approximately $^{1}/_{2}$ in. (13 mm) wide.

Copyrighted material licensed to Fermi National Laboratory by Clarivate Analytics (US) LLC, subscriptions.techstreet.com, downloaded on 2020-09-23 17:45:20 +0000 by Fermi National Laboratory User.
No further reproduction or distribution is permitted.

Figure QB-463.2(b)
Plates Performance Qualification

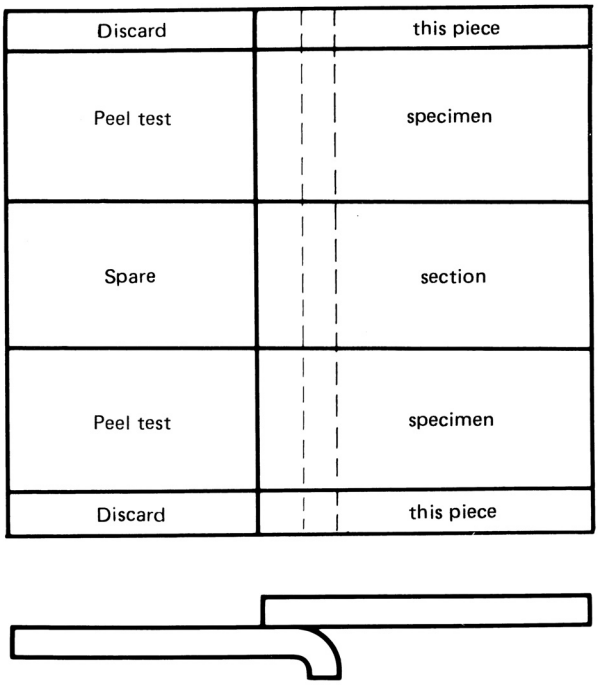

Lap Joint [Note (1)]

NOTE:
(1) Required when peel test can be used.

Copyrighted material licensed to Fermi National Laboratory by Clarivate Analytics (US) LLC, subscriptions.techstreet.com, downloaded on 2020-09-23 17:45:20 +0000 by Fermi National Laboratory User.
No further reproduction or distribution is permitted.

Figure QB-463.2(c)
Pipe Performance Qualification

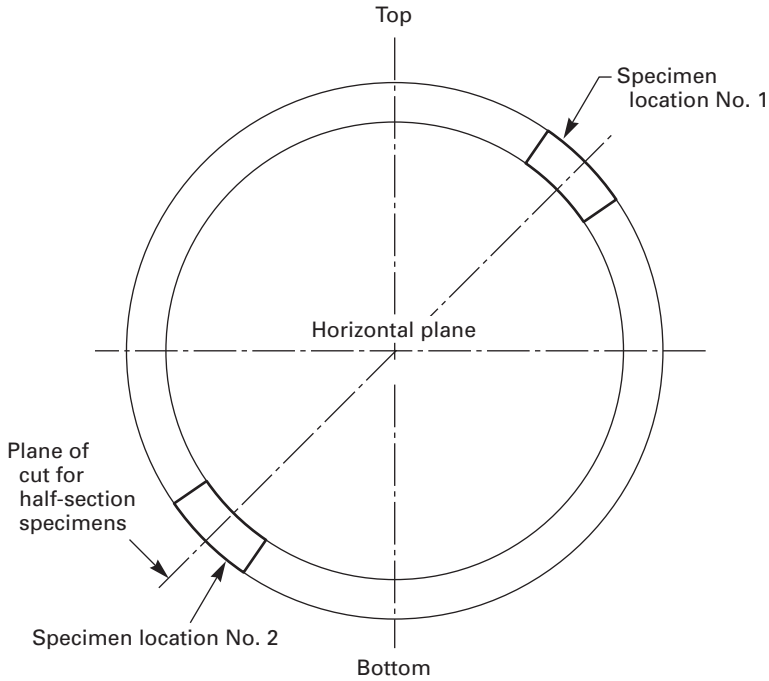

GENERAL NOTES:

(a) For coupons over 3 in. (75 mm) O.D., one specimen shall be removed from each location shown.

(b) For coupons 3 in. (75 mm) O.D. and smaller, two coupons shall be brazed and one specimen shall be removed from each coupon. If brazed in the horizontal flow position, the specimen shall be taken at specimen location No. 1. Alternatively, each coupon shall be cut longitudinally and the specimen shall be both sides of one half-section of each coupon.

(c) When the coupon is brazed in the horizontal flow position, specimen locations shall be as shown relative to the horizontal plane of the coupon. For half-section specimens, plane of cut shall be oriented as shown relative to the horizontal plane of the coupon.

(d) When both ends of a coupling are brazed, each end is considered a separate test coupon.

Copyrighted material licensed to Fermi National Laboratory by Clarivate Analytics (US) LLC, subscriptions.techstreet.com, downloaded on 2020-09-23 17:45:20 +0000 by Fermi National Laboratory User.
No further reproduction or distribution is permitted.

QB-466 TEST JIGS

Figure QB-466.1
Guided-Bend Jig

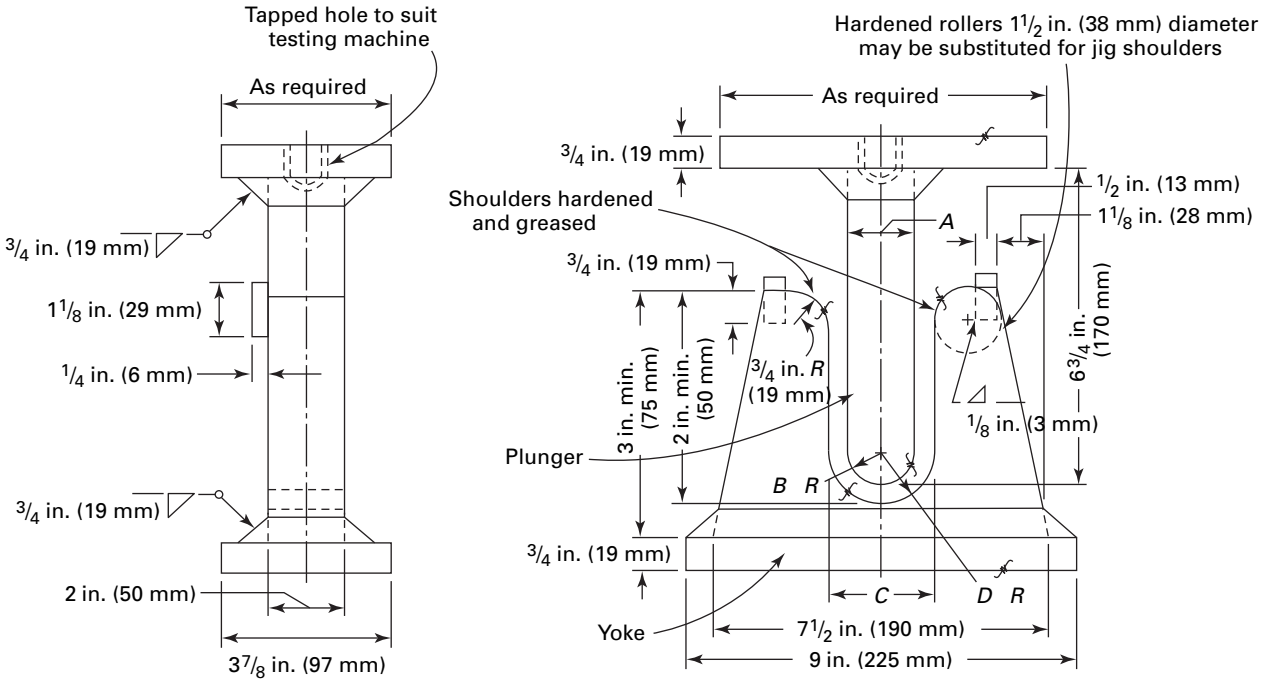

Thickness of Specimen, in. (mm)	*A*, in. (mm)	*B*, in. (mm)	*C*, in. (mm)	*D*, in. (mm)
3/8 (10)	1 1/2 (38)	3/4 (19)	2 3/8 (60)	1 3/16 (30)
t	$4t$	$2t$	$6t + 3.2$	$3t + 1.6$

Copyrighted material licensed to Fermi National Laboratory by Clarivate Analytics (US) LLC, subscriptions.techstreet.com, downloaded on 2020-09-23 17:45:20 +0000 by Fermi National Laboratory User.
No further reproduction or distribution is permitted.

Figure QB-466.2
Guided-Bend Roller Jig

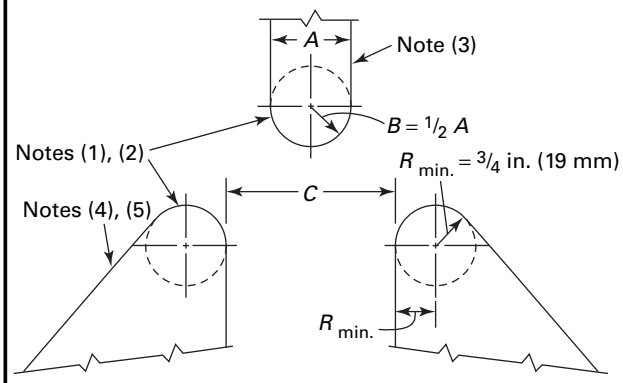

Thickness of Specimen, in. (mm)	*A*, in. (mm)	*B*, in. (mm)	*C*, in. (mm)
3/8 (10)	1 1/2 (38)	3/4 (19)	2 3/8 (60)
t	4*t*	2*t*	6*t* + 1/8 (3)

GENERAL NOTE: The braze joint in the case of a transverse bend specimen shall be completely within the bend portion of the specimen after testing.

NOTES:
(1) Either hardened and greased shoulders or hardened rollers free to rotate shall be used.
(2) The shoulders of rollers shall have a minimum bearing surface of 2 in. (50 mm) for placement of the specimen. The rollers shall be high enough above the bottom of the jig so that the specimens will clear the rollers when the ram is in the low position.
(3) The ram shall be fitted with an appropriate base and provision made for attachment to the testing machine, and shall be of a sufficiently rigid design to prevent deflection and misalignment while making the bend test. The body of the ram may be less than the dimensions shown in column *A*.
(4) If desired, either the rollers or the roller supports may be made adjustable in the horizontal direction so that specimens of *t* thickness may be tested on the same jig.
(5) The roller supports shall be fitted with an appropriate base designed to safeguard against deflection or misalignment and equipped with means for maintaining the rollers centered midpoint and aligned with respect to the ram.

Figure QB-466.3
Guided-Bend Wrap Around Jig

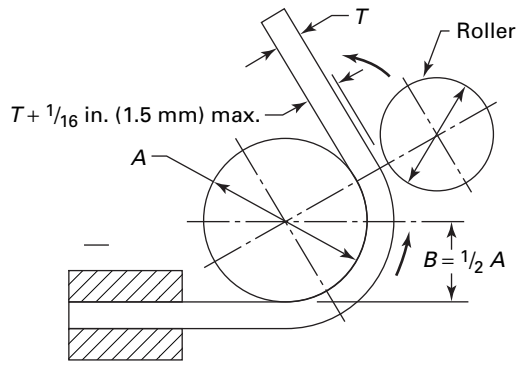

Thickness of Specimen, in. (mm)	*A*, in. (mm)	*B*, in. (mm)
3/8 (10)	1 1/2 (38)	3/4 (19)
t	4*t*	2*t*

GENERAL NOTES:
(a) Dimensions not shown are the option of the designer. The essential consideration is to have adequate rigidity so that the jig parts will not spring.
(b) The specimen shall be firmly clamped on one end so that there is no sliding of the specimen during the bending operation.
(c) Test specimens shall be removed from the jig when the outer roll has been removed 180 deg from the starting point.

Copyrighted material licensed to Fermi National Laboratory by Clarivate Analytics (US) LLC, subscriptions.techstreet.com, downloaded on 2020-09-23 17:45:20 +0000 by Fermi National Laboratory User.
No further reproduction or distribution is permitted.

PART QF
PLASTIC FUSING

ARTICLE XXI
PLASTIC FUSING GENERAL REQUIREMENTS

(19) **QF-100 SCOPE**

The rules in this Part apply to the preparation and qualification of the fusing procedure specification (FPS), and the performance qualification of fusing operators.

QF-101 FUSING PROCEDURE SPECIFICATION

A fusing procedure specification used by an organization that will have responsible operational control of production fusing shall be an FPS that has been qualified by that organization in accordance with Article XXII, or it shall be a standard fusing procedure specification (SFPS or MEFPS) as defined in QF-201.2.

The fusing procedure specification (FPS, SFPS, or MEFPS) specifies the "variables" (including ranges, if any) under which fusing must be performed. The fusing procedure specification (FPS, SFPS, or MEFPS) shall address the applicable fusing process variables, both essential and nonessential, as provided in Article XXII for production fusing.

QF-102 FUSING PERFORMANCE QUALIFICATION (FPQ)

Fusing operator performance qualification is intended to verify the ability of the fusing operator to produce a sound fused joint when following an FPS, SFPS, or MEFPS. The fusing operator performance qualification record (FPQ) documents the performance test of the fusing operator, and the results of the required mechanical tests.

QF-103 RESPONSIBILITY

QF-103.1 Fusing. Each organization shall conduct the tests required in this Section to qualify the FPS and the performance of the fusing operators who apply these procedures. Alternatively, an organization may use an SFPS or MEFPS under the provisions of QF-201.2. The organization shall perform and document the tests required by this Article to qualify the performance of fusing operators for fusing operations.

QF-103.2 Records. Each organization shall maintain a record of the results of the mechanical testing performed to satisfy the requirements for FPS and fusing operator performance qualifications.

QF-110 FUSED JOINT ORIENTATION

Orientation categories for fused joints are illustrated in Figure QF-461.1.

QF-120 TEST POSITIONS

Fused joints may be made in test coupons oriented in any of the positions shown in Figure QF-461.2.

QF-130 DATA ACQUISITION AND EVALUATION

QF-131 DATA ACQUISITION RECORD REQUIREMENTS (19)

The fusing variables listed in QF-131.1, QF-131.2, and QF-131.3 shall be recorded for each fused test joint.

QF-131.1 Butt- and Sidewall-Fusing Procedures.

(a) heater surface temperature immediately before inserting the heater plate

(b) gauge pressure during the initial heat cycle

(c) gauge pressure and elapsed time during the heat-soak cycle

(d) heater removal (dwell) time

(e) gauge pressure and elapsed time during the fusing and cool cycle

(f) drag pressure when applicable

(g) joint configuration

(h) pipe diameter and wall thickness

(i) type of polyethylene (PE) material (specification and classification) and manufacturer

(j) FPS or SFPS used, operator identification, time, date, and fusing machine identification

Copyrighted material licensed to Fermi National Laboratory by Clarivate Analytics (US) LLC, subscriptions.techstreet.com, downloaded on 2020-09-23 17:45:20 +0000 by Fermi National Laboratory User.
No further reproduction or distribution is permitted.

QF-131.2 Electrofusion Procedures

(a) date
(b) ambient temperature
(c) material temperature
(d) pipe diameter and wall thickness
(e) the FPS or MEFPS used
(f) nominal fusion time
(g) adjusted fusion time
(h) termination code
(i) fitting description
(j) fitting manufacturer
(k) elapsed time for fusion and cooling
(l) manual or barcode entry
(m) lot number for fitting
(n) operator identification
(o) operator verification of scraping and cleaning
(p) fit-up gap
(q) fusion number
(r) fusion energy
(s) fusion processor serial number
(t) voltage
(u) preheat voltage and time, if applicable

QF-131.3 Manual Butt-Fusing Procedure.

(a) heater surface temperature immediately before inserting the heater plate
(b) verification that heating pressure was reduced to zero after initial indication of melt
(c) elapsed time during the heat soak cycle
(d) heater removal (dwell) time
(e) elapsed time during the fusing/cool cycle
(f) joint configuration
(g) pipe diameter and wall thickness
(h) type of polyethylene (PE) material (specification and classification) and manufacturer
(i) FPS used, operator identification, time, date, and fusing machine identification

(19) QF-132 DATA ACQUISITION RECORD REVIEW

The data acquisition record for each fused test joint shall be compared to the FPS after completion. QF-485 provides a suggested format to document the data acquisition record review. The reviewer shall verify that the conditions listed in QF-132.1, QF-132.2, and QF-132.3 are met.

QF-132.1 Butt- and Sidewall-Fusing Qualification.

(a) All data required by QF-131 were recorded.
(b) Interfacial fusing pressure was within the FPS or SFPS range.
(c) Heater surface temperature recorded was within the FPS or SFPS range.
(d) Fusing pressure applied during the fusing and cool cycle was correctly calculated to include the drag pressure, is within the FPS or SFPS range for the applicable size (e.g., pipe diameter), and agrees with the recorded hydraulic fusing pressure.
(e) Fusing pressure was reduced to a value less than or equal to the drag pressure at the beginning of the heat soak cycle.
(f) Fusing machine was opened at the end of the heat soak cycle, the heater was removed, and the pipe joint ends brought together at the fusing pressure within the time frame specified by the FPS or SFPS.
(g) Cooling time at fusing pressure met the minimum time specified by the FPS or SFPS.

If the recorded data is outside the limits of the FPS or SFPS, the joint is unacceptable.

QF-132.2 Electrofusion Qualification.

(a) All data required by QF-131 were correctly recorded.
(b) Voltage was within the FPS or MEFPS range.
(c) Nominal fusion time was within the FPS or MEFPS range.
(d) Absence of any electrical fault during fusing operation.

QF-132.3 Manual Butt-Fusing Qualification.

(a) All data required by QF-131 were recorded.
(b) Heater surface temperature recorded was within the FPS range.
(c) Fusing machine was opened at the end of the heat soak cycle, the heater was removed, and the pipe joint ends were brought together at the fusing pressure within the time frame specified by the FPS.
(d) Cooling time at butt-fusing pressure met the minimum time specified by the FPS.

If the recorded data are outside the limits of the FPS, the joint is unacceptable.

QF-140 EXAMINATIONS AND TESTS

Results of all required examinations and tests shall be recorded on the Fusing Procedure Qualification Record (PQR) or Fusing Operator Performance Qualification (FPQ).

QF-141 VISUAL EXAMINATION (19)

(a) Butt Fusion. All fused joints shall receive a visual examination of all accessible surfaces of the fused joint.
(b) Sidewall Fusion and Electrofusion. Test joints shall be visually examined upon completion of the test coupon, and when sectioned for evaluation.

QF-141.1 Visual Acceptance Criteria.

(a) Butt and Sidewall Fusion. See Figure QF-462(a) for evaluation examples.

(1) There shall be no evidence of cracks or incomplete fusing.

(2) Joints shall exhibit proper fused bead configuration.

(3) Variations in upset bead heights on opposite sides of the cleavage and around the circumference of fused pipe joints are acceptable.

Copyrighted material licensed to Fermi National Laboratory by Clarivate Analytics (US) LLC, subscriptions.techstreet.com, downloaded on 2020-09-23 17:45:20 +0000 by Fermi National Laboratory User.
No further reproduction or distribution is permitted.

(4) The apex of the cleavage between the upset beads of butt-fused joints shall remain above the base material surface.

(5) For sidewall-fused joints, there shall be three beads: a melt bead around the saddle base, a main (header) pipe melt bead, and a bead on the main (header) from the edge of the heating tool. The saddle and main (header) melt beads should be rounded and of a size recommended by the fitting manufacturer. The heater bead should be visible all around the fitting base but may be separate from the main (header) pipe melt bead, depending on the shape of the heater [see Figure QF-462(b)].

(6) Fused joints shall not display visible angular misalignment, and for butt-fused joints, outside diameter mismatch shall be less than 10% of the nominal wall thickness.

(7) The data record for the FPS or fusing operator performance qualification test shall be reviewed and compared to the FPS or SFPS to verify observance of the specified variables applied when completing the fused test joint.

(b) Electrofusion Assemblies

(1) There shall be no visible evidence on external and accessible internal surfaces of cracks, excess internal (I.D.) melt caused by overheating, fitting malfunction, or incomplete fusion. Maximum fit-up gap, or maximum misalignment and out-of-roundness, shall be within FPS or MEFPS limits.

(2) The data record for the FPS or fusing operator performance qualification test shall be reviewed and compared to the FPS or MEFPS to verify observance of the specified variables applied when completing the fused test joint.

(c) Sectioned Electrofusion Joints. Voids due to trapped air or shrinkage during the cooling process are acceptable only if round or elliptical in shape with no sharp corners, and provided they meet the following requirements [see Figure QF-468, illustrations (a) and (b)].

(1) Individual voids shall not exceed 10% of the fusion zone length.

(2) Multiple voids shall not exceed a combined total of 20% of the fusion zone length.

(3) When voids are detected, additional sections or examinations shall be made to verify that the void does not follow a diametric path connecting with the pressure-containing area of the joint. [See Figure QF-466, illustration (c).]

QF-142 PRESSURE TESTS

(19) **QF-142.1 Elevated Temperature Sustained Pressure Tests — Butt or Sidewall Fusing.** These tests assess the resistance to slow crack growth of the fused joint.

QF-142.1.1 Test Coupons.

(a) Fusion joint test coupons shall be made with minimum of NPS 8 (DN 200) DR 11 pipe or the maximum size to be fused, whichever is less.

NOTE: Dimension Ratio (DR) = Outside Diameter ÷ Minimum Thickness.

(b) The completed test coupons shall contain pipe on either side of the butt or sidewall joint with a minimum length of 1.5 times the joint (header) outside diameter or 12 in. (300 mm), whichever is greater, from the fused joint to free-end closures on the ends of the assembly.

(c) The testing shall be performed in accordance with ASTM D3035 or ASTM F714 for pipe, or ASTM F905 for saddle fittings, as applicable.

(d) Manual butt fusion joint test coupons shall be made with a maximum of NPS 6 (DN 150) DR 11 pipe or the maximum size to be fused, whichever is less.

QF-142.1.2 Test Conditions.

(a) Test Temperature. All tests shall be conducted at 176°F ± 4°F (80°C ± 2°C).

(b) Test Pressure. The assemblies are to be subjected to pipe fiber stresses as follows:

(1) PE2708 material: 580 psi (4.0 MPa) for 1,000 hr or 670 psi (4.6 MPa) for 170 hr

(2) PE3608 material: 580 psi (4.0 MPa) for 1,000 hr or 670 psi (4.6 MPa) for 170 hr

(3) PE4710 material: 660 psi (4.5 MPa) for 1,000 hr or 750 psi (5.2 MPa) for 200 hr

QF-142.1.3 Test Procedure. Elevated temperature sustained pressure tests shall be performed in accordance with ASTM D3035 or ASTM F714 for pipe, or ASTM F905 for saddle fittings.

QF-142.1.4 Acceptance Criteria. Any failures within the specified time periods shall be of the pipe, independent of the joint. With one ductile pipe failure, the average time before failure for all three specimens shall not be less than the specified time. If more than one ductile pipe failure occurs at the higher pressure, the pressure of the test may be reduced and repeated until 1,000-hr results are obtained. Any brittle failures shall necessitate new tests using different pipe.

QF-142.2 Elevated Temperature Sustained Pressure Test — Electrofusion. These tests assess the resistance to slow crack growth at points of stress concentration due to electrofusion fitting design.

QF-142.2.1 Test Coupons. Four test coupons shall be prepared and conditioned in accordance with ASTM F1055. Pipe material PE designation shall not be less than the electrofusion fitting.

QF-142.2.2 Test Conditions. The assemblies are to be subjected to pipe fiber stresses as follows:

(a) Temperature. All tests shall be conducted at 176°F ± 4°F (80°C ± 2°C).

(b) Test Pressure. The assemblies are to be subjected to pipe fiber stresses as follows:

(1) PE2708 pipe material: 580 psi (4.0 MPa) for 1,000 hr or 670 psi (4.6 MPa) for 170 hr

(2) PE3608 pipe material: 580 psi (4.0 MPa) for 1,000 hr or 670 psi (4.6 MPa) for 170 hr

Copyrighted material licensed to Fermi National Laboratory by Clarivate Analytics (US) LLC, subscriptions.techstreet.com, downloaded on 2020-09-23 17:45:20 +0000 by Fermi National Laboratory User.
No further reproduction or distribution is permitted.

(3) PE4710 pipe material: 660 psi (4.5 MPa) for 1,000 hr or 750 psi (5.2 MPa) for 200 hr

QF-142.2.3 Test Procedure. Elevated temperature sustained pressure testing shall be performed in accordance with ASTM F1055.

QF-142.2.4 Acceptance Criteria. Any failures within the specified time periods shall be of the pipe, independent of the fitting or joint, and shall be of a "brittle" type pipe failure, not "ductile." If ductile pipe failure occurs at the higher pressure, the pressure of the test may be reduced and repeated until either 1,000-hr results are obtained or pipe brittle failures are achieved.

(19) **QF-142.3 Minimum Hydraulic Burst Pressure.** This test assesses the short-term burst capacity of the fused joint in order to identify any fundamental weaknesses in the integrity of the assembly. This test shall be performed in accordance with ASTM D1599.

QF-142.3.1 Test Coupons.

(a) Electrofusion. Four burst test coupons shall be prepared and conditioned in accordance with ASTM F1055. Pipe material PE classification shall not be less than the electrofusion fitting.

(b) Butt Fusing. Four burst test coupons shall be prepared and conditioned in accordance with the hydrostatic burst test requirements of ASTM D3035.

QF-142.3.2 Test Conditions.

(a) Test Temperature. The test shall be performed at 73°F ± 4°F (23°C ± 2°C).

(b) Test Pressure. The minimum hydraulic burst pressure of the test coupon shall not be less than that required to produce the following fiber stress in the pipe:

(1) PE2708 pipe materials: 2,520 psi (17.4 MPa)

(2) PE3608 pipe materials: 2,520 psi (17.4 MPa)

(3) PE4710 pipe materials: 2,900 psi (20 MPa)

QF-142.3.3 Test Procedure. The coupons shall be tested in accordance with ASTM D1599.

QF-142.3.4 Acceptance Criteria. The assembly shall not fail in the electrofusion fitting or fused joint.

QF-143 BEND TESTS

These tests are designed to impart bending stresses to a fused plastic specimen to evaluate the soundness of the fused joint.

(19) QF-143.1 Reverse-Bend Test (RBT)

This test is for butt or sidewall fusion joints of PE pipe with a wall thickness approximately 1 in. (25 mm) or less, but may be used for thicker pipe.

QF-143.1.1 Test Specimens. Reverse-bend test specimens shall be cut to a minimum width of 1.5 times the test coupon thickness for testing and removed as shown in Figure QF-463, illustration (a) or (c).

QF-143.1.2 Test Conditions — Test Temperature. The reverse bend test shall be conducted at a temperature between 60°F to 80°F (16°C to 27°C).

QF-143.1.3 Test Procedure.

(a) One test specimen shall be bent to place the outside surface of the joint in tension. For butt fusion, an additional test specimen shall be bent to place the inside surface of the joint in tension.

(b) The bending process shall ensure the ends of the specimens are brought into contact with one another.

(c) Testing shall be performed in accordance with ASTM F2620, Appendix X4.

QF-143.2 Guided Butt Fusion Side-Bend Test (GSBT) (19)

This test is limited to butt fusion joints of PE pipe with a wall thickness greater than 1 in. (25 mm).

QF-143.2.1 Test Specimens.

(a) Test specimens shall be removed from the fused test coupon with the upset bead remaining on the outside and inside surfaces. A strip having the full thickness of the test coupon and measuring approximately 1 in. (25 mm) wide and 18 in. (450 mm) long shall be removed along the longitudinal axis of the test coupon, with the joint located in the approximate center of the strip. See Figure QF-463, illustration (b).

(b) Plane or machine the width to 0.25 in. ± 0.02 in. (6.4 mm ± 0.5 mm) with a smooth finish on both sides. See Figure QF-463, illustration (c).

QF-143.2.2 Test Conditions.

(a) Test Temperature. Conduct the GSBT at 60°F to 80°F (16°C to 27°C).

(b) Test Speed. The elapsed time of the test shall be between 30 sec and 60 sec.

QF-143.2.3 Guided Side-Bend Test Procedure.

QF-143.2.3.1 Jigs. Test specimens shall be bent in a test jig consisting of a fixed member with two support mandrels to support the specimen while force is applied. The hydraulic ram, used to supply the bending force, is also attached to the jig and has a ram attached to the end of the cylinder. See Figure QF-463, illustration (d).

QF-143.2.3.2 Bend Procedure. Position the side-bend test specimen with the butt fusion joint in the center of the jig between the support mandrels. Position the ram in the center of the fusion bead on the test specimen. Move the ram slowly until it makes contact with the test specimen and is positioned in line with the fusion bead. Begin to apply the bending force and deflect the side-bend test specimen. The test is complete when the test specimen is bent to a maximum included angle of 90 deg as shown in Figure QF-463, illustration (d) or until failure occurs.

Copyrighted material licensed to Fermi National Laboratory by Clarivate Analytics (US) LLC, subscriptions.techstreet.com, downloaded on 2020-09-23 17:45:20 +0000 by Fermi National Laboratory User.
No further reproduction or distribution is permitted.

The convex surface of the specimen shall be visually examined after testing, with the specimen either in or removed from the text fixture. Due to specimen springback, examination immediately after removal from the fixture is recommended.

QF-143.2.3.3 Acceptance Criteria. The test specimen shall not break or exhibit cracking or fractures on the convex (outer) surface at the fusion interface during this test.

QF-143.3 Electrofusion Bend Test. This test is used to assess the integrity of electrofusion couplings and fittings. It is used for couplings and fittings NPS 12 (DN 300) and greater.

QF-143.3.1 Test Specimens.

(a) Socket Fittings (Full Wrap). Test coupons shall be prepared and conditioned, with four specimens cut from each half of the fitting and machined to $^1/_{16}$ in. (1.5 mm) width in accordance with ASTM F1055. See Figure QF-467, illustration (a).

(b) Saddles (Not Full Wrap). The stack and bottom half of the pipe should be removed. The saddle shall be cut in half in the transverse direction and then each half cut again in the longitudinal direction as shown in Figure QF-467, illustration (c). Specimen slices shall be removed at all four cut edges and machined to $^1/_{16}$ in. (1.5 mm) width through the fusion base of the saddle fitting. Two diagonal quarters shall be used for the transverse specimens, and the two remaining diagonal quarters shall be used for the longitudinal specimens. See Figure QF-467, illustration (c).

QF-143.3.2 Test Conditions — Test Temperature. The test shall be performed at 73°F ± 4°F (23°C ± 2°C), unless otherwise specified.

QF-143.3.3 Test Procedure.

(a) The cross-section of the machined specimens shall be inspected for visual discontinuities.

(b) Each $^1/_{16}$ in. (1.5 mm) wide specimen shall be placed in a clamp such that the bond line between the fitting and the pipe is located at the plane of bending. The entire length of the bond is to be flexed 90 deg along the plane of bending — four times in both directions. See Figure QF-467, illustration (b).

QF-143.3.4 Acceptance Criteria.

(a) The cross-section of the machined specimens shall meet the criteria of QF-141.1.

(b) Separation of the specimen along the fusion line constitutes failure of the specimen. Minor separation at the outer limits of the fusion heat source and voids between the wires are acceptable as long as the voids do not exceed the limits of QF-141.1. Ductile failure in the pipe, fitting, or the wire insulation material is acceptable as long as the bond interface remains intact.

QF-144 TENSILE TESTS

QF-144.1 High-Speed Tensile Impact Test (HSTIT). This test method is designed to impart tensile impact energy to a butt-fused polyethylene (PE) pipe specimen to evaluate its ductility.

QF-144.1.1 Test Specimens.

(a) Test specimens shall be removed from the butt-fused test coupon with the upset bead remaining on the outside diameter and inside diameter surfaces. Specimens for test coupon thicknesses less than or equal to 2 in. (50 mm) shall include the full wall thickness of the fused joint. Specimens for test coupon thicknesses 2 in. (50 mm) and greater may be cut into approximately equal strips between 1 in. (25 mm) and 2.5 in. (64 mm) wide for testing with each segment tested individually such that the full cross section is tested.

(b) Test specimens shall be prepared by machining to achieve the dimensions given in Figure QF-464, with the upset beads remaining intact.

(c) A smooth surface free of visible flaws, scratches, or imperfections shall remain on all faces of the reduced area with no notches, gouges, or undercuts exceeding the dimensional tolerances given in ASTM F2634. Marks left by coarse machining operations shall be removed, and the surfaces shall be smoothed with abrasive paper (600 grit or finer) with the sanding strokes applied parallel to the longitudinal axis of the test specimen.

(d) Mark the test specimens in the area outside the hole with the applicable specimen identification using a permanent indelible marker of a contrasting color, or an etching tool.

(e) Condition the test specimens at 73°F ± 4°F (23°C ± 2°C) for not less than 1 hr just prior to conducting the test.

QF-144.1.2 Test Conditions.

(a) Test Temperature. Conduct the high speed impact test at a temperature of 73°F ± 4°F (23°C ± 2°C) unless otherwise specified.

(b) Test Speed. The speed of testing shall be in accordance with Table QF-144.2 with a testing speed tolerance of +0.5 in./sec to −1 in./sec (+13 mm/s to −25 mm/s).

Table QF-144.2
Testing Speed Requirements

Wall Thickness	Testing Speed
≤ 1.25 in. (32 mm)	6 in./sec (150 mm/s)
> 1.25 in. (32 mm)	4 in./sec (100 mm/s)

QF-144.1.3 Test Procedure

(a) Set up the machine and set the speed of testing to the rate specified in QF-144.1.2(b).

(b) Pin each specimen in the clevis tooling of the testing machine, aligning the long axis of the specimen and the tooling with the pulling direction of the test machine.

Copyrighted material licensed to Fermi National Laboratory by Clarivate Analytics (US) LLC, subscriptions.techstreet.com, downloaded on 2020-09-23 17:45:20 +0000 by Fermi National Laboratory User.
No further reproduction or distribution is permitted.

(c) Testing shall be performed in accordance with ASTM F2634.

(d) Evaluate the test specimen fracture to determine the mode of failure, and note the results in the test record and on the PQR.

QF-144.1.4 Test Record. The HSTIT shall be documented by preparing a test record that includes the following information:

(a) testing speed applied
(b) testing temperature observed
(c) specimen dimension verification
(d) test machine calibration data
(e) test specimen identification
(f) test date
(g) test operator identification
(h) testing failure mode and acceptance or rejection
(i) test equipment identification

QF-144.1.5 Acceptance Criteria. Failure mode shall be ductile, with no evidence of brittle failure at the fusion interface. See Figure QF-465, illustrations (a) through (d), for evaluation examples.

QF-144.2 Electrofusion Axial Load Resistance Test. This test assesses the ability of a socket-type electrofusion joint to transmit axial loads.

QF-144.2.1 Test Specimens.

(a) Except as permitted in (b), tensile test coupons and specimens shall be prepared and conditioned in accordance with ASTM F1055. Tensile tests shall be made on a complete electrofusion test assembly, not on specimen straps cut from the coupon.

(b) When equipment to conduct full scale tensile tests on test coupons larger than NPS 8 (DN 200) is not available, testing for resistance to axial loads shall be conducted through one peel test plus one short-term hydrostatic pressure test for each material temperature.

(1) Peel Test. Four specimens shall be cut at approximately 90-deg intervals from each test coupon and prepared as shown in Figure QF-469, illustration (a).

(2) Short-Term Hydrostatic Test. To ensure axial forces are exerted only on the fusion joint, test coupons shall be constructed using flanged or capped pipe segments such that essentially no exposed (unreinforced) pipe protrudes outside of the socket. See Figure QF-470.

QF-144.2.2 Test Conditions.

(a) Test Temperature. The tests shall be performed at 73°F ± 4°F (23°C ± 2°C).

(b) Peel Test Speed. Peel test load shall be applied at a rate of 0.2 in./min (5 mm/min).

QF-144.2.3 Test Procedure.

(a) Tensile Test. Testing shall be performed in accordance with ASTM F1055, using the test apparatus described in ASTM D638.

(b) Peel Test. Specimens shall be subjected to a tensile load as shown in Figure QF-469, illustration (b) until failure as shown in Figure QF-469, illustration (c).

(c) Short-Term Hydrostatic Test.

(1) Test coupons constructed to QF-144.2.1(b)(2) shall be filled with water.

(2) The test coupon shall be pressurized using the apparatus described in ASTM D1599 to the pressure shown in Table QF-144.2.3 at a rate sufficient to achieve the full test pressure within 60 sec.

(3) The test coupon shall remain under the full test pressure for a period of not less than 5 min.

QF-144.2.4 Acceptance Criteria.

(a) Tensile Test. Test coupons less than or equal to NPS 8 (DN 200) shall not fail in the pipe or fitting when subjected to a tensile stress that causes the pipe to yield to an elongation of 25% or greater, or causes the pipe to break outside the joint area. Yielding shall be measured only in the pipe, independent of the fitting or joint.

(b) Peel Test. Specimens for sizes larger than NPS 8 (DN 200) shall not separate in the fusion interface in a brittle manner. Ductile failure between wires, tearing through the coupling wall or pipe wall, and up to 15% separation at the outer limits of the heat source are permitted [see Figure QF-469, illustration (c) for examples].

(c) Short-Term Hydrostatic Test. Test coupons for sizes larger than NPS 8 (DN 200) shall not rupture or break through the fitting or fusion interface.

QF-145 Crush and Impact Resistance Tests (19)

Crush tests and impact resistance tests assess the integrity of electrofusion and sidewall fusion joints.

QF-145.1 Crush Test. Crush tests are used to evaluate socket-type (full-wrap) or saddle-type (not full wrap) electrofusion joints. These are required for pipe sizes less than NPS 12 (DN 300), and may be used as an alternative to the electrofusion bend test for pipe sizes NPS 12 (DN 300) and greater.

QF-145.1.1 Test Specimens.

(a) Socket Type. Socket-type joint crush test coupons shall be prepared and conditioned, and specimens removed by cutting in half longitudinally at the fusion zones in accordance with ASTM F1055. See Figure QF-466, illustration (a).

(b) Saddle Type. Saddle-type crush test coupons shall be prepared, conditioned and tested in accordance with ASTM F1055. See Figure QF-466, illustration (b).

Table QF-144.2.3

Pipe Material	Test Pressure
PE2708	630 psig (4.3 MPa)
PE3608	725 psig (5.0 MPa)
PE4710	725 psig (5.0 MPa)

Copyrighted material licensed to Fermi National Laboratory by Clarivate Analytics (US) LLC, subscriptions.techstreet.com, downloaded on 2020-09-23 17:45:20 +0000 by Fermi National Laboratory User.
No further reproduction or distribution is permitted.

QF-145.1.2 Test Conditions — Test Temperature. The test shall be performed at 73°F ± 4°F (23°C ± 2°C), unless otherwise specified.

QF-145.1.3 Test Procedure.

(a) Socket Type. Crush testing shall be performed on each end half by clamping at a distance of $1\frac{1}{4}$ in. (32 mm) from the outermost wires and closing the jaws until the inner walls of the pipe meet in accordance with ASTM F1055. See Figure QF-466, illustration (b).

(b) Saddle Type. Crush testing shall be performed by placing the jaws of a vice or hydraulic press within $\frac{1}{2}$ in. (13 mm) of the edges of the saddle and tightening until the inner walls of the pipe meet, in accordance with ASTM F1055. See Figure QF-466, illustration (c).

QF-145.1.4 Acceptance Criteria. Separation of the fitting from the pipe at the fusion interface constitutes a failure of the test, except that minor separation at the outer limits of the fusion heat source up to 15% of the fusion length is acceptable. Ductile failure in the pipe, fitting, or the wire insulation material, is acceptable as long as the bond interface remains intact.

QF-145.2 Impact Resistance Test. Impact tests are used to evaluate saddle-type branch connection joints.

QF-145.2.1 Test Specimens. Impact test specimens shall be prepared and conditioned in accordance with ASTM F1055 for electrofusion or ASTM F905 for sidewall fusion. (**19**)

QF-145.2.2 Test Conditions — Test Temperature. The test shall be performed at 73°F ± 4°F (23°C ± 2°C).

QF-145.2.3 Test Specimens. The joint branch connection shall be impacted in a direction parallel to the axis of the pipe with a force sufficient to break the body or other portion of the specimen. The test device and method of testing shall be in accordance with ASTM F905.

QF-145.2.4 Acceptance Criteria. Breakage shall initiate outside of the joint area without failure of the joint. For electrofusion saddles, separation in the fusion interface greater than 15% of the fusion length at the outer limits of the fusion heat source constitutes failure of the test. (**19**)

Copyrighted material licensed to Fermi National Laboratory by Clarivate Analytics (US) LLC, subscriptions.techstreet.com, downloaded on 2020-09-23 17:45:20 +0000 by Fermi National Laboratory User.
No further reproduction or distribution is permitted.

ARTICLE XXII
FUSING PROCEDURE QUALIFICATIONS

QF-200 GENERAL

Each organization shall prepare written Fusing Procedure Specifications (FPS) or Standard Fusing Specifications (SFPS or MEFPS) as defined in QF-201 to provide direction to the fusing operator for making production fused joints.

(19) **QF-201 PROCEDURE QUALIFICATION**

QF-201.1 Fusing Procedure Specification (FPS)

(a) Fusing Procedure Specification (FPS). A FPS is a written fusing procedure that is qualified by an organization in accordance with the rules of this Section.

(b) Contents of the FPS. The completed FPS shall address all of the essential and nonessential variables for each fusing process used in the FPS. The essential and nonessential variables for fusing are outlined in Table QF-254 for butt fusion, Table QF-255 for electrofusion, and Table QF-256 for manual butt fusion. The organization may include any other information in the FPS that may be helpful in making a fused joint.

(c) Changes. Changes in the documented essential variables require requalification of the FPS.

QF-201.2 Standard Fusing Procedure Specifications

(a) Standard Fusing Procedure Specification (SFPS)

(1) Prerequisites. An SFPS is a fusing procedure specification that contains acceptable polyethylene (PE) fusing variables based on standard industry practice and testing as defined in ASTM F2620. An SFPS may be used for production fusing by organizations without further qualification.

(2) Contents of the SFPS. The SFPS shall address all of the essential and nonessential variables listed in Table QF-254, Table QF-256, or Table QF-257. In addition, the SFPS shall include all of the conditions listed in QF-221.1. The organization may include any additional information in the SFPS that may be helpful in making a fused joint.

(3) Changes. Changes in the essential variables or conditions of an SFPS beyond the limits specified in QF-221.1, QF-221.2, Table QF-254, Table QF-256, or Table QF-257 shall require the qualification of an FPS.

(b) Manufacturer Qualified Electrofusion Procedure Specification (MEFPS)

(1) Prerequisites. An MEFPS is an electrofusion procedure that has been qualified by an electrofusion fitting manufacturer, based on standard industry practice in accordance with the Plastics Pipe Institute (PPI), Technical Note TN-34 and ASTM F1290, for the electrofusion fitting manufacturer's specific electrofusion joint design, and qualified by the electrofusion fitting manufacturer in accordance with ASTM F1055 to define the ranges for the essential variables identified in Table QF-255. An MEFPS may be used for production by organizations fusing the same electrofusion fitting manufacturer's qualified fittings without further qualification.

(2) Contents of the MEFPS. The MEFPS shall address all essential and nonessential variables listed in Table QF-255. In addition, the MEFPS shall include all of the conditions listed in QF-222.1. The manufacturer or contractor may include any additional information in the MEFPS that may be helpful in making a fused joint.

(3) Changes. Changes in the essential variables or conditions of an MEFPS beyond the limits specified in QF-222.1 or Table QF-255 shall require the qualification of an FPS.

QF-201.3 Format of the FPS, SFPS, or MEFPS. The information required to be included in the FPS, SFPS, or MEFPS may be in any format, written or tabular, to fit the needs of each organization, provided all essential and nonessential variables outlined in QF-250, and the parameters specified in QF-220 as applicable, are addressed. Forms QF-482(a), QF-482(b), and QF-483(c) have been provided as suggested formats for preparing the FPS, SFPS, or MEFPS.

QF-201.5 Each organization who qualifies their own FPS shall prepare a procedure qualification record (PQR) that is defined as follows:

(a) Procedure Qualification Record (PQR). A record of the range of essential variables documented during the fusing of the test coupon(s) and the results of the required visual and mechanical tests performed.

(b) Contents of the PQR. The completed PQR shall document the ranges for all essential variables listed in QF-250 during the fusing of the test coupon(s). Nonessential variables observed during the fusing of the test coupon may be recorded at the organization's option.

The PQR shall be certified by the organization to be a true and accurate record of the variables recorded during the fusing of the test coupon(s) and the required examinations and tests specified in QF-140.

Copyrighted material licensed to Fermi National Laboratory by Clarivate Analytics (US) LLC, subscriptions.techstreet.com, downloaded on 2020-09-23 17:45:20 +0000 by Fermi National Laboratory User.
No further reproduction or distribution is permitted.

(c) Changes to the PQR. Changes to the PQR are not permitted except for documented editorial corrections or those utilizing addenda. An organization may be permitted to fuse materials other than those used in the FPS qualification, when the alternative materials are assigned to a material grouping in QF-420 whose fusing properties are considered essentially identical. Additional information may be incorporated into a PQR at a later date, provided the information is substantiated as having been associated with the original qualification conditions by lab records or similar documented evidence. All changes to a PQR require recertification (including date) by the organization.

(d) Format of the PQR. The information required to be in the PQR may be in any format, written or tabular, to fit the needs of each organization, provided all essential variables outlined in QF-250 are included. The types and number of tests, and their results shall be reported on the PQR. Forms QF-483(a), QF-483(b), and QF-483(c) have been provided as suggested formats for preparing the PQR. When required, additional sketches or information may be attached or referenced to record the required variables.

(e) Availability of the PQR. PQRs supporting an FPS to be used in production fusing operations shall be available for review.

(f) Multiple FPSs With One PQR or Multiple PQRs With One FPS. Several FPSs may be prepared from the qualification test data recorded on a single PQR. A single FPS may encompass the range of qualified essential variables represented by multiple PQRs supporting the qualified combination and range of essential variables.

QF-202 TYPE OF TESTS REQUIRED

(19) QF-202.1 Mechanical Tests

QF-202.1.1 *High-Speed Tensile Impact Test (HSTIT).* Specimens shall be prepared for butt fusion joints in accordance with Figure QF-464 and tested in accordance with QF-144.1.1. The minimum number of specimens required to be tested shall be as follows:

(a) for pipe specimens less than 4 NPS (DN 100): not less than two specimens removed from fused pipe test coupons at intervals of approximately 180 deg apart

(b) for pipe specimens 4 NPS (DN 100) and greater: not less than four specimens removed from fused pipe test coupons at intervals approximately 90 deg apart

(c) other product forms: not less than two specimens removed from fused test coupons

QF-202.1.2 Elevated temperature sustained pressure tests for butt fusing, sidewall fusing, and electrofusion shall be conducted in accordance with QF-142.1 or QF-142.2, as applicable.

QF-202.1.3 Minimum hydraulic burst pressure tests for electrofusion or butt-fusing joints shall be performed in accordance with QF-142.3.

QF-202.1.4 Bend tests shall be performed in accordance with QF-143.3 for electrofusion joints.

QF-202.1.5 Electrofusion axial load resistance tests (tensile or peel plus short-term hydrostatic) shall be performed in accordance with QF-144.2.

QF-202.1.6 Electrofusion crush tests shall be performed in accordance with QF-145.1.

QF-202.1.7 Electrofusion and sidewall fusion impact resistance tests shall be performed in accordance with QF-145.2.

QF-202.1.8 If any test specimen required by QF-202.1 fails to meet the applicable acceptance criteria, the test coupon shall be considered unacceptable.

(a) When it can be determined that the cause of failure is not related to incorrectly selected or applied fusing variables, additional test specimens may be removed as close as practicable to the original specimen location to replace the failed test specimens. If sufficient material is not available, another test coupon may be fused utilizing the original fusing parameters.

(b) When it has been determined that the test failure was caused by one or more incorrectly selected or applied essential variable(s), a new test coupon may be fused with appropriate changes to the variable(s) that were determined to be the cause for test failure.

(c) When it is determined that the test failure was caused by one or more fusing conditions other than essential variables, a new set of test coupons may be fused with the appropriate changes to the fusing conditions that were determined to be the cause for test failure. If the new test passes, the fusing conditions that were determined to be the cause for the previous test failure shall be addressed by the organization to ensure that the required properties are achieved in all fused production joints.

QF-202.2 Testing Procedure to Qualify the FPS (19)

QF-202.2.1 Polyethylene Butt and Sidewall Fusing

(a) Butt Fusing

(1) For pipe having a wall thickness less than or equal to 2 in. (50 mm), one set of test coupons shall be prepared using any thickness of pipe less than or equal to 2 in. (50 mm) but not less than one-half the thickness of the pipe to be fused in production.

(2) For pipe having wall thickness greater than 2 in. (50 mm), one set of test coupons shall be prepared using pipe of at least 2 in. (50 mm) thickness but not less than one-half the maximum thickness to be fused in production.

(3) Butt-fusing joint coupons shall be prepared in accordance with the FPS using the following combinations of heater temperature ranges and interfacial pressure ranges:

(-a) high heater surface temperature and high interfacial pressure, five joints

Copyrighted material licensed to Fermi National Laboratory by Clarivate Analytics (US) LLC, subscriptions.techstreet.com, downloaded on 2020-09-23 17:45:20 +0000 by Fermi National Laboratory User.
No further reproduction or distribution is permitted.

(-b) high heater surface temperature and low interfacial pressure, five joints

(-c) low heater surface temperature and high interfacial pressure, five joints

(-d) low heater surface temperature and low interfacial pressure, five joints

(4) Each fused joint shall be subject to visual examination per QF-141.

(5) Two fused joints of each combination shall be evaluated using the elevated temperature sustained pressure tests for pipe specified in QF-142.1.

(6) Three fused joints of each combination described in (3) shall be evaluated using the high speed tensile impact test (HSTIT) specified in QF-144.1.

(b) Sidewall Fusing

(1) Sidewall-fusing coupons shall be prepared for each design of saddle-fitting base in accordance with the FPS using the specified heater temperatures and pressures. Successful testing shall qualify the FPS for actual heater temperature applied ±10°F (±5.5°C) and for actual gage pressures applied ±10%.

(2) Two fused joints for each design of saddle-fitting base shall be evaluated using the elevated temperature sustained pressure tests specified in QF-142.1.

(3) Two fused joints for each design of saddle-fitting base shall be evaluated by the sidewall fusion impact resistance test specified in QF-145.2.

QF-202.2.2 Polyethylene Electrofusion

(a) Fittings shall be selected at random in the quantities shown in Table QF-202.2.2, along with pipe segments needed for making the fused coupons, and all material shall be prepared and conditioned for a minimum of 16 hr immediately prior to fusing, as follows:

(1) half at the lowest material temperature to be fused in production, and half at the highest material temperature to be fused in production

(2) two low-temperature coupons fused in the low-temperature environment and two high-temperature coupons fused in the high-temperature environment are required for each of the following tests, which shall be performed at the temperatures specified in QF-100 for each test:

(-a) QF-202.1.2

(-b) QF-202.1.3

(-c) either QF-202.1.4 or QF-202.1.6

(-d) for socket connections QF-202.1.5

(-e) for saddle connections, QF-202.1.7 when required by contract documents

(b) Failure of one of the four specimens tested in each test is cause for failure. Alternatively, four additional specimens may be produced at the failed specimen's joining temperature and retested. Failure of any of these four additional specimens constitutes failure of the test.

Copyrighted material licensed to Fermi National Laboratory by Clarivate Analytics (US) LLC, subscriptions.techstreet.com, downloaded on 2020-09-23 17:45:20 +0000 by Fermi National Laboratory User.
No further reproduction or distribution is permitted.

Table QF-202.2.2
Electrofusion Procedure Qualification Test Coupons Required

Test Procedure	Reference	Socket ≤NPS 8 (≤DN 200)		Socket >8<NPS 12 (>DN 200 <DN 300)		Socket ≥NPS 12 (≥DN 300)		Saddle <NPS 12 (<DN 300) [Note (1)]		Saddle ≥NPS 12 (≥DN 300) [Note (1)]	
		Conditioning and Fusing Temperature [Note (2)]									
		Low	High	Low	High	Low	High	Low	High	Low	High
Elevated temperature sustained pressure test	QF-202.1.2/ QF-142.1	2	2	2	2	2	2	2	2	2	2
Minimum hydraulic quick burst pressure test	QF-202.1.3/ QF-142.2	2	2	2	2	2	2	2	2	2	2
Joint integrity crush test [Note (3)]	QF-202.1.6/ QF-145.1	2	2	2	2			2	2		
Electrofusion bend [Note (3)]	QF-202.1.4/ QF-143.3					2	2			2	2
Electrofusion axial load resistance–tensile	QF-202.1.5/ QF-144.2	2	2								
Peel test	QF-202.1.5/ QF-144.2.1(b)(1)			1	1	1	1				
Short-term hydrostatic	QF-202.1.5/ QF-144.2.1(b)(2)			1	1	1	1				
Impact resistance [Note (4)]	QF-202.1.7/ QF-145.2							2	2		

NOTES:
(1) Size listed is that of the branch connection.
(2) Fitting manufacturer should be consulted prior to fusing outside of their recommended temperature range.
(3) It is permissible to use specimens tested for the short-term hydrostatic test or minimum hydraulic quick-burst pressure test provided neither the joint area nor the pipe segment needed for crushing was a part of the failure mode in the quick-burst pressure test.
(4) An impact resistance test is only required when specified in contract documents.

QF-202.2.3 Polyethylene Manual Butt Fusion.

(a) Manual butt fusion joints are limited to NPS 6 (DN 150) and smaller.

(b) Joint coupons shall be prepared in accordance with the FPS using the following combinations of heater temperature ranges:

(1) highest heater surface temperature, five joints

(2) lowest heater surface temperature, five joints

(c) When the FPS requires verification of pressure by torque, then the high pressure (verified by torque) and the low pressure (verified by torque) shall be tested at each temperature extreme.

(d) Each fused joint shall be subject to visual examination per QF-141.

(e) The fused joints shall be tested using the hydraulic burst pressure test for pipe specified in QF-142.3.

(f) Failure of any test joint is cause for test failure.

QF-203 LIMITS OF QUALIFIED POSITIONS FOR PROCEDURES

Unless otherwise specified by the fusing variables (QF-250), a procedure qualified in any position shown in Figure QF-461.2 qualifies for all positions. A fusing operator making and passing the FPS qualification test is qualified only for the position tested when position is an essential variable for operator qualification. (See QF-301.2).

QF-220 STANDARD FUSING PROCEDURE SPECIFICATIONS

QF-221 STANDARD BUTT-FUSING PROCEDURE SPECIFICATION (SFPS)

QF-221.1 Pipe Butt Fusing of Polyethylene. When the fusing procedure is limited to the following conditions, procedure qualification testing is not required. If (19)

Copyrighted material licensed to Fermi National Laboratory by Clarivate Analytics (US) LLC, subscriptions.techstreet.com, downloaded on 2020-09-23 17:45:20 +0000 by Fermi National Laboratory User.
No further reproduction or distribution is permitted.

the organization deviates from the conditions listed below, procedure qualification testing in accordance with QF-202.2 is required.

(a) The pipe material is limited to PE 2708, PE 3608, and PE 4710 (see QF-403.1).

(b) The axis of the pipe is limited to the horizontal position ±45 deg (see QF-404.1).

(c) The pipe ends shall be faced to establish clean, parallel mating surfaces that are perpendicular to the pipe centerline on each pipe end, except for mitered joints. When the ends are brought together at the drag pressure, there shall be no visible gap.

(d) For mitered butt fusion joints, the pipe faces shall be at the specific angle to produce the mitered joint. When the ends are brought together at the drag pressure, there shall be no visible gap.

(e) The external surfaces of the pipe are aligned to within 10% of the pipe wall thickness (see QF-402.2).

(f) Applied pressure during fusing shall meet one of the following requirements:

(1) For hydraulic butt fusing, the drag pressure shall be measured and recorded. The theoretical fusing pressure shall be calculated so that an interfacial pressure of 60 psi to 90 psi (0.41 MPa to 0.62 MPa) is applied to the pipe ends. The butt-fusing gauge pressure set on the fusing machine shall be the theoretical fusing pressure plus drag pressure (see QF-405.2).

(2) For manual butt fusing requiring torque verification, the drag torque shall be measured and recorded. The theoretical applied fusing torque shall be calculated so that an interfacial pressure of 60 psi to 90 psi (0.41 MPa to 0.62 MPa) is applied to the pipe ends. The torque applied during the fusing process shall be the theoretical applied fusing torque plus the measured drag torque.

(3) For manual butt fusing not requiring torque verification, minimum bead size (see Figure QF-221.1) shall be used rather than torque or pressure measurements to verify that proper pressure is applied during fusing.

(g) The heater surface temperature shall be 400°F to 450°F (200°C to 230°C) (see QF-405.1).

(h) The initial heating shall begin by inserting the heater into the gap between the pipe ends and applying the fusing pressure until an indication of melt is observed around the circumference of the pipe. When observed, the pressure shall be reduced to drag pressure and the fixture shall be locked in position so that no outside force is applied to the joint during the heat soak cycle.

(i) The ends shall be held in place until the minimum bead size is formed between the heater faces and the pipe ends, as shown in Figure QF-221.1. For 14 NPS (DN 350) and larger pipe sizes, the minimum heat soak time of 4.5 min per inch (25 mm) of pipe wall thickness shall be obtained) (see QF-405.3).

(j) After the proper bead size is formed, the machine shall be opened and the heater removed. The pipe end surfaces shall be smooth, flat, and free of contamination. The pipe ends shall be brought together and the fusing pressure reapplied.

(k) The maximum time from separating the pipe ends from the heater until the pipe ends are pushed together shall not exceed the time given in Table QF-221.2 (see QF-405.4).

(l) The fusing pressure shall be maintained until the joint has cooled, after which the pipe may be removed from the joining machine. The minimum cool time at the fusing pressure shall be 11 min per inch (26 sec per millimeter) of pipe wall thickness of the thicker member (see QF-405.5).

Copyrighted material licensed to Fermi National Laboratory by Clarivate Analytics (US) LLC, subscriptions.techstreet.com, downloaded on 2020-09-23 17:45:20 +0000 by Fermi National Laboratory User.
No further reproduction or distribution is permitted.

Figure QF-221.1
Required Minimum Melt Bead Size

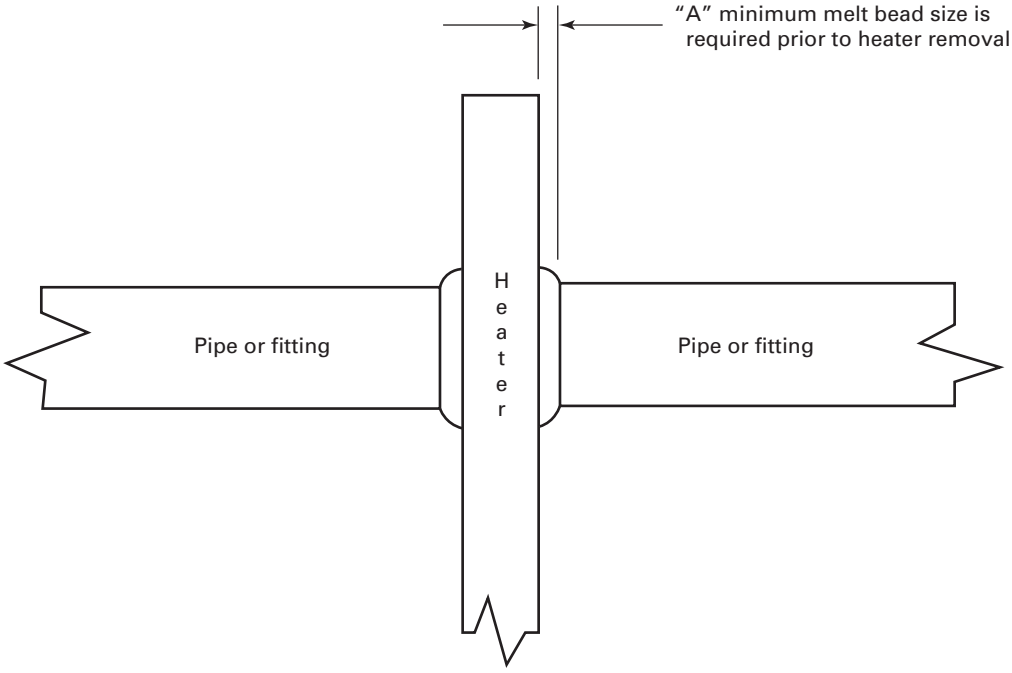

Pipe (O.D.), in. (mm)	"A" Minimum Melt Bead Size, in. (mm)
< 2.37 (60)	1/32 (1)
≥ 2.37 (60) to ≤ 3.5 (89)	1/16 (1.5)
> 3.5 (89) to ≤ 8.63 (219)	3/16 (5)
> 8.63 (219) to ≤ 12.75 (324)	1/4 (6)
> 12.75 (324) to ≤ 24 (610)	3/8 (10)
> 24 (610) to ≤ 36 (900)	7/16 (11)
> 36 (900) to ≤ 65 (1625)	9/16 (14)

Copyrighted material licensed to Fermi National Laboratory by Clarivate Analytics (US) LLC, subscriptions.techstreet.com, downloaded on 2020-09-23 17:45:20 +0000 by Fermi National Laboratory User.
No further reproduction or distribution is permitted.

(19) **QF-221.2 Sidewall Fusing of Polyethylene.** When the fusing procedure is limited to the following conditions, procedure qualification testing is not required. If the organization deviates from the conditions listed below, procedure qualification testing in accordance with QF-202.2.1(b) is required.

(a) The pipe material is limited to PE 2708, PE 3608, and PE 4710.

(b) The sidewall-fusing tool shall be centered on and secured to the header, and adequately supported.

(c) The mating surfaces of the header and saddle fitting shall be abraded with a 50- to 60-grit utility cloth or scraped approximately 0.007 in. (0.178 mm) deep with a nonsmearing scraping device to remove oxidation and contamination. After abrading or scraping, the surfaces shall be cleaned of all dust and residue with a dry, lint-free, nonsynthetic cloth.

(d) The heater shall be brought to 500°F (260°C) ± 10°F (5.5°C) and centered on the header beneath the saddle fitting, which shall be immediately pressed against the heater with a heat-fusing force equal to an interfacial pressure of 60 psi (0.414 MPa) ± 10%, unless otherwise specified by the manufacturer of the fitting. When an indication of melt appears on the header at the apex of the saddle, the pressure shall be reduced to a heat soak pressure equal to drag pressure, unless otherwise specified by the manufacturer of the saddle fitting.

(e) The heat soak pressure shall be maintained until a melt bead of approximately $^1/_{16}$ in. (1.5 mm) is visible around the circumference of the fitting, unless a heating time is specified by the saddle fitting manufacturer.

(f) After the proper bead size is formed (or heating time is achieved), the heater shall be removed, the fusion surfaces of the header and saddle fitting shall be uniform and free of contamination, and the fitting shall be pressed against the header within the heater plate removal time specified in Table QF-221.2 and at a fusing force equal to an interfacial pressure of 30 psi (0.2 MPa) ± 10%.

(g) The fusing force shall be maintained for a minimum of 5 min for saddle fittings with branch connections $1^1/_4$ in. (32 mm) and smaller and for a minimum of 10 min for branch connections $1^1/_2$ in. (36 mm) and larger, after which the pressure may be reduced and the fusing tool removed.

(h) The assembly should cool a minimum of an additional 30 min before the plug is cut out of the header or external forces are applied near the joint.

Table QF-221.2 (19)
Maximum Heater Plate Removal Time for Pipe-to-Pipe Butt and Sidewall Fusing

Pipe Wall Thickness, in. (mm)	Maximum Heater Plate Removal Time, sec
Field Applications	
0.17 to 0.36 (4 to 9)	8
> 0.36 to 0.55 (> 9 to 14)	10
> 0.55 to 1.18 (> 14 to 30)	15
> 1.18 to 2.5 (> 30 to 64)	20
> 2.5 to 4.5 (> 64 to 114)	25
> 4.5 (> 114)	30
Fabrication Shop	
1.18 to 2.5 (30 to 64)	40
> 2.5 to 4.5 (> 64 to 114)	50
> 4.5 (> 114)	60

Copyrighted material licensed to Fermi National Laboratory by Clarivate Analytics (US) LLC, subscriptions.techstreet.com, downloaded on 2020-09-23 17:45:20 +0000 by Fermi National Laboratory User.
No further reproduction or distribution is permitted.

QF-222 MANUFACTURER QUALIFIED FUSING PROCEDURE SPECIFICATION (MEFPS)

QF-222.1 Electrofusion of Polyethylene. When the fusing procedure is limited to the following conditions, additional procedure qualification testing is not required. If the organization deviates from the conditions listed below, procedure qualification testing in accordance with QF-202.2 is required:

(a) The pipe and fitting material is limited to PE 2708, PE 3608, and PE 4710 in the combinations shown in Table QF-222.1, unless otherwise qualified by the fitting manufacturer (see QF-403.1).

(b) The pipe ends shall be cleaned with water to remove dirt, mud, and other debris prior to scraping.

(c) For socket-type connections, the pipe ends shall be cut perpendicular ±5° to the pipe centerline on each pipe end and fully inserted into the center of the fitting.

(d) Immediately before electrofusion, the external surfaces of the pipe shall be scraped with a non-smearing scraping device to cleanly remove approximately 0.01 in. (0.25 mm) of material from the outer surface of the pipe, such that a complete layer of material is removed from the surfaces to be fused (see QF-407.3).

(e) In the event of touching or recontamination of the pipe after scraping, 70% (minimum) isopropyl alcohol shall be used with a clean lint-free cloth for cleaning (see QF-407.3).

(f) For socket-type connections, the pipe shall be marked with a non-petroleum-base marker for the proper insertion depth before installing the electrofusion fitting, and the fitting shall be installed on the pipe end to the marked depth taking care to avoid recontamination of the clean fusion surfaces.

(g) The fitting shall be connected to the electrofusion control box with the prescribed leads.

(h) The values for fusing energy voltage, nominal fusing time, and cooling period qualified by the electrofusion fitting manufacturer based on permitted material temperature range, shall be entered into the processor before energizing the coils (see QF-405.5, QF-405.6, QF-405.7, and QF-405.8).

(i) The power supply/generator and any extension cords shall meet the electrofusion fitting manufacturer's specified requirements (see QF-406.3).

(j) Upon completion of energizing the coils, the leads may be disconnected. No movement of the fused assembly shall be permitted until the end of the fitting manufacturer's prescribed cooling period. (See QF-405.5.)

Table QF-222.1
Electrofusion Material Combinations

Pipe	Fitting
PE 2708	PE 2708
PE 3608	PE 4710
PE 4710	PE 4710

QF-250 FUSING VARIABLES

QF-251 TYPES OF VARIABLES FOR FUSING PROCEDURE SPECIFICATIONS

These variables (listed for each fusing process in Tables QF-254 and QF-255) are categorized as essential or nonessential variables. The "Brief of Variables" listed in the tables are for reference only. See the complete variable description in Article XXIV, QF-400.

QF-252 ESSENTIAL VARIABLES

Essential variables are those that will affect the mechanical properties of the fused joint, if changed, and require requalification of the FPS, SFPS, or MEFPS when any change exceeds the specified limits of the values recorded in the FPS for that variable.

QF-253 NONESSENTIAL VARIABLES

Nonessential variables are those that will not affect the mechanical properties of the fused joint, if changed, and do not require requalification of the FPS, SFPS, or MEFPS when changed.

Copyrighted material licensed to Fermi National Laboratory by Clarivate Analytics (US) LLC, subscriptions.techstreet.com, downloaded on 2020-09-23 17:45:20 +0000 by Fermi National Laboratory User.
No further reproduction or distribution is permitted.

(19)

Table QF-254
Fusing Variables Procedure Specification
Polyethylene Pipe Butt Fusing

Paragraph		Brief of Variables	Essential	Nonessential
QF-402 Joints	.1	ϕ Joint type	X	
	.2	ϕ Pipe surface alignment	X	
QF-403 Material	.1	ϕ PE	X	
	.3	ϕ Wall thickness	X	
	.4	ϕ Cross-sectional area		X
QF-404 Position	.1	ϕ Position	X	
QF-405 Thermal Conditions	.1	ϕ Heater surface temperature	X	
	.2	ϕ Interfacial pressure	X	
	.3	Decrease in melt bead width	X	
	.4	Increase in heater removal time	X	
	.5	Decrease in cool-down time	X	
	.9	ϕ Initial heating pressure	X	
QF-406 Equipment	.1	ϕ Fusing machine manufacturer		X
QF-407 Technique	.1	ϕ Shop to field, or vice versa		X

Table QF-255
Fusing Variables Procedure Specification
Polyethylene Electrofusion

Paragraph		Brief of Variables	Essential	Nonessential
QF-402 Joints	.3	ϕ Joint design	X	
	.4	ϕ Fit-up gap	X	
QF-403 Material	.1	ϕ PE Pipe	X	
	.4	ϕ Pipe wall thickness		X
	.5	ϕ Fitting manufacturer	X	
	.6	ϕ Pipe diameter	X	
QF-405 Thermal	.5	ϕ Cool-down time	X	
	.6	ϕ Fusion voltage	X	
	.7	ϕ Nominal fusion time	X	
	.8	ϕ Material temperature range	X	
QF-406 Equipment	.2	ϕ Power supply		X
	.3	ϕ Power cord	X	
	.4	ϕ Processor		X
	.5	ϕ Saddle clamp	X	
QF-407 Technique	.2	ϕ Cleaning agent		X
	.3	ϕ Scraping device	X	

Copyrighted material licensed to Fermi National Laboratory by Clarivate Analytics (US) LLC, subscriptions.techstreet.com, downloaded on 2020-09-23 17:45:20 +0000 by Fermi National Laboratory User.
No further reproduction or distribution is permitted.

(19)

Table QF-256
Manual Butt-Fusing Variables Procedure Specification
Polyethylene Pipe Manual Butt Fusing

Paragraph		Brief of Variables	Essential	Nonessential
QF-402 Joints	.1	ϕ Joint type	X	
	.2	ϕ Pipe surface alignment	X	
QF-403 Material	.1	ϕ PE	X	
	.3	ϕ Wall thickness	X	
	.4	ϕ Cross-sectional area		X
QF-404 Position	.1	ϕ Position	X	
QF-405 Thermal Conditions	.1	ϕ Heater surface temperature	X	
	.3	Decrease in melt bead width	X	
	.4	Increase in heater removal time	X	
	.5	Decrease in cool-down time	X	
QF-406 Equipment	.1	ϕ Fusing machine manufacturer	X	
	.6	± Torque measurement	X	
QF-407 Technique	.1	ϕ Shop to field or vice versa		X

(19)

Table QF-257
Fusing Variables Procedure Specification
Polyethylene Sidewall Fusing

Paragraph		Brief of Variables	Essential	Nonessential
QF-402 Joints	.6	ϕ Fitting manufacturer	X	
QF-403 Material	.1	ϕ PE pipe	X	
	.8	ϕ Header pipe diameter	X	
QF-405 Thermal Conditions	.1	ϕ Heater temperature	X	
	.2	ϕ Interfacial pressure	X	
	.3	ϕ Melt bead size or time	X	
	.4	ϕ Heater plate removal time	X	
	.5	ϕ Cool-down time	X	
	.9	ϕ Initial heating pressure	X	
QF-406 Equipment	.1	ϕ Fusing machine manufacturer	X	
QF-407 Technique	.2	ϕ Cleaning agent or method	X	
	.4	ϕ Abrasion method	X	

Copyrighted material licensed to Fermi National Laboratory by Clarivate Analytics (US) LLC, subscriptions.techstreet.com, downloaded on 2020-09-23 17:45:20 +0000 by Fermi National Laboratory User.
No further reproduction or distribution is permitted.

ARTICLE XXIII
PLASTIC FUSING PERFORMANCE QUALIFICATIONS

QF-300 GENERAL

This Article lists the essential variables that apply to fusing operator performance qualifications. The fusing operator qualification is limited by the essential variables given for the fusing process. These variables are outlined in QF-360.

QF-301 TESTS

QF-301.1 Intent of Tests. The fusing operator performance qualification tests are intended to determine the ability of fusing operators to make sound fused joints when following a qualified FPS, SFPS, or MEFPS.

QF-301.2 Qualification Tests. Each organization shall qualify each fusing operator for the fusing process (es) to be used in production. The performance qualification tests shall be completed using a qualified FPS, SFPS, or MEFPS. A fusing operator qualified for fusing in accordance with one qualified FPS, SFPS, or MEFPS is also qualified for fusing in accordance with other qualified FPSs, SFPSs, or MEFPSs within the limits of the fusing operator essential performance variables given in Table QF-362. Visual and mechanical examination requirements are described in QF-302. Retests and renewal of qualification are given in QF-320.

The fusing operator responsible for fusing any FPS qualification test coupons successfully qualifying the FPS is also qualified as a fusing operator within the limits of the essential performance qualification variables given in Table QF-362.

QF-301.3 Identification of Fusing Operators. Each qualified fusing operator shall be assigned an identifying number, letter, or symbol by the organization, which shall be used to identify production fused joints completed by the fusing operator.

(19) **QF-301.4 Record of Tests.** The record of fusing operator performance qualification (FPQ) tests shall include the qualified ranges of essential performance variables, the type of tests performed, and test results for each fusing operator. Suggested forms for these records are given in Forms QF-484(a), QF-484(b), and QF-484(c).

QF-302 TYPE OF TEST REQUIRED

QF-302.1 Visual Examination. For test coupons, all surfaces shall be examined visually per QF-141 before cutting specimens. Test coupons shall be visually examined per QF-141 over the entire circumference.

QF-302.2 Mechanical Tests. (19)

(a) One butt fusion coupon shall be prepared, from which two test specimens shall be removed from the fused test joint at intervals of approximately 180 deg. Each specimen shall be tested by one of the following methods:

(1) Reverse-Bend Test. Test specimens shall be removed as shown in Figure QF-463, illustration (a), and tested in accordance with QF-143.1.

(2) Guided Side-Bend Test. Test specimens shall be removed as shown in Figure QF-463, illustration (b), and prepared and tested in accordance with QF-143.2.

(3) High-Speed Tensile Impact Test (HSTIT). Test specimens shall be removed, prepared, and tested in accordance with QF-144.

(b) One electrofusion coupon shall be prepared, from which either of the following tests may be performed at ambient temperature between 60°F to 80°F (16°C to 27°C):

(1) Electrofusion Bend Test. Four electrofusion bend test specimens shall be removed in accordance with QF-143.3.1 and tested in accordance with QF-143.3.3 and QF-143.3.4.

(2) Crush Test. Test specimens shall be prepared in accordance with QF-145.1.1 and tested in accordance with QF-145.1.3 and QF-145.1.4.

(c) One sidewall fusion coupon shall be prepared, from which the following test shall be performed at ambient temperature between 60°F to 80°F (16°C to 27°C):

(1) Reverse-Bend Test. One test specimen including fusion samples from two edges of the fused saddle shall be removed in accordance with Figure QF-463, illustration (e), and tested in accordance with QF-143.1.

QF-303 LIMITS OF QUALIFIED POSITIONS AND DIAMETERS (SEE QF-461)

QF-303.1 Pipe Positions.

(a) Fusing operators who pass the required tests for butt fusing in the test positions shown in Figures QF-461.1 and QF-461.2 shall be qualified for fusing within the following limits:

(1) The 5G test position qualifies for the horizontal position ±45 deg.

(2) Test positions other than 5G qualify for the orientation tested ±20 deg.

(b) Electrofusion operators who pass the required tests for fusing in any test position qualify for all positions.

Copyrighted material licensed to Fermi National Laboratory by Clarivate Analytics (US) LLC, subscriptions.techstreet.com, downloaded on 2020-09-23 17:45:20 +0000 by Fermi National Laboratory User.
No further reproduction or distribution is permitted.

QF-303.2 Pipe Diameters. Pipe sizes within the ranges listed in Table QF-452.3 shall be used for test coupons to qualify within the ranges listed in Table QF-452.3.

QF-305 FUSING OPERATORS

Each fusing operator shall have passed the visual and mechanical examinations and tests prescribed in QF-301 and QF-302.

QF-305.1 Testing. Qualification testing shall be performed on test coupons in accordance with QF-311 and the following requirements:

(a) The data required by QF-130 shall be recorded for each fusing machine operator.

(b) The supervisor conducting the test shall observe the making of the fused joint and verify that the FPS, SFPS, or MEFPS was followed.

QF-305.2 Examination. Test coupons fused in accordance with QF-305.1 shall be evaluated as follows:

(a) The completed joint shall be visually examined in accordance with QF-302.1.

(b) After the joint is complete, the data required by QF-130 shall be reviewed for compliance with the requirements of the FPS, SFPS, or MEFPS used for the qualification test.

(c) Test specimens shall be removed and tested and in accordance with QF-302.2.

QF-310 QUALIFICATION TEST COUPONS

QF-311 TEST COUPONS

(a) The test coupons shall consist of fusing one pipe joint assembly in at least one of the positions shown in Figure QF-461.2.

(b) Test coupons may be produced at any ambient temperature within the range permitted by the FPS, SFPS, or MEFPS.

QF-320 RETESTS AND RENEWAL OF QUALIFICATION

QF-321 RETESTS

A fusing operator who fails one or more of the tests prescribed in QF-302, as applicable, may be retested under the following conditions.

QF-321.1 Immediate Retest Using Visual Examination. When the qualification coupon has failed the visual examination of QF-302.1, retests shall be accepted by visual examination before conducting the mechanical testing.

When an immediate retest is made, the fusing operator shall make two consecutive test coupons. If both additional coupons pass the visual examination requirements, the examiner shall select one of the acceptable test coupons for specimen removal to facilitate conducting the required mechanical testing.

QF-321.2 Immediate Retest Using Mechanical Testing. When the qualification coupon has failed the mechanical testing of QF-302.2, and an immediate retest is conducted, the fusing operator shall make two consecutive test coupons. If both additional coupons pass the mechanical test requirements, the fusing machine operator is qualified.

QF-321.3 Further Training. When the fusing operator has undergone additional training or completed additional fusing practice joints, a new test shall be made for each fusion test joint that failed to meet the requirements.

QF-322 EXPIRATION AND RENEWAL OF QUALIFICATION

QF-322.1 Expiration of Qualification. The performance qualification of a fusing operator shall be affected when one of the following conditions occurs:

(a) When a fusing operator has not completed a fused joint using a qualified FPS, SFPS, or MEFPS for a time period of 6 months or more, their qualification shall expire.

(b) When there is a specific reason to question the ability of the fusing operator to make fused joints meeting the requirements of this Section, the qualifications of the fusing operator shall be revoked.

QF-322.2 Renewal of Qualification

(a) Performance qualifications that have expired under the provisions of QF-322.1(a) may be renewed by having the fusing operator fuse a single test coupon and subjecting the test coupon to the testing required by QF-302. A successful test shall renew all of the fusing operator's previous qualifications for that fusing process.

(b) Fusing operators whose qualifications have been revoked under the provisions of QF-322.1(b) may be requalified by fusing a test coupon representative of the planned production work. The fused test coupon shall be tested as required by QF-302. A successful test shall restore the fusing operator's qualification within the qualified range of essential performance variables listed in Table QF-362.

QF-360 ESSENTIAL VARIABLES FOR PERFORMANCE QUALIFICATION OF FUSING OPERATORS

QF-361 GENERAL

A fusing operator shall be requalified whenever a change is made in one or more of the essential variables listed in Table QF-362.

Copyrighted material licensed to Fermi National Laboratory by Clarivate Analytics (US) LLC, subscriptions.techstreet.com, downloaded on 2020-09-23 17:45:20 +0000 by Fermi National Laboratory User.
No further reproduction or distribution is permitted.

(19)

Table QF-362
Essential Variables Applicable to Fusing Operators

Paragraph		Brief of Variables
(a) Butt Fusing		
QF-403 Material	.1	ϕ Pipe material
	.2	ϕ Pipe diameter
QF-404 Position	.1	+ Position
QF-406 Equipment	.1	ϕ Equipment manufacturer
(b) Electrofusion		
QF-402 Joint Type	.1	ϕ Socket to saddle & vice versa
QF-403 Material	.1	ϕ Pipe material
	.2	ϕ Pipe diameter
(c) Sidewall Fusion		
QF-403 Material	.1	ϕ Pipe material
	.7	ϕ Header diameter
QF-406 Equipment	.1	ϕ Fusing machine manufacturer
	.7	ϕ Type of sidewall-fusing machine

Copyrighted material licensed to Fermi National Laboratory by Clarivate Analytics (US) LLC, subscriptions.techstreet.com, downloaded on 2020-09-23 17:45:20 +0000 by Fermi National Laboratory User.
No further reproduction or distribution is permitted.

ARTICLE XXIV
PLASTIC FUSING DATA

QF-400 VARIABLES

QF-401 GENERAL

Each fusing variable described in this Article is applicable for procedure qualification when referenced in QF-250 for each specific fusing process. Essential variables for performance qualification are referenced in QF-360 for each specific fusing process. A change from one fusing process to another fusing process requires requalification (e.g., a change from butt fusing to electrofusion).

QF-401.1 Fusing Data. The fusing data includes the fusing variables grouped as joints, pipe material, position, thermal conditions, equipment, and technique.

QF-402 JOINTS

QF-402.1 A change in the type of joint from that qualified, except that a square butt joint qualifies a mitered joint.

QF-402.2 A change in the pipe O.D. surface misalignment of more than 10% of the wall thickness of the thinner member to be fused.

QF-402.3 Any change in the design of an electrofusion joint that causes a change in any other essential variable of Table QF-254. The configuration of a fitting may change without impacting those variables, e.g., from a 90-deg elbow to a 45-deg elbow; or from an NPS 2 × NPS 8 (DN 50 × DN 200) saddle connection to an NPS 3 × NPS 8 (DN 80 × DN 200) saddle connection.

QF-402.4 An increase in the maximum radial fit-up gap qualified. This variable may be expressed in terms of maximum misalignment and out-of-roundness.

QF-402.5 A change from socket-type (full wrap) joint to saddle-type (partial wrap) joint, and vice versa.

(19) **QF-402.6** A change in manufacturer of the sidewall fitting.

QF-403 MATERIAL

QF-403.1 A change to any pipe material other than those listed in Table QF-422.

QF-403.2 A change in the pipe diameter beyond the range qualified in Table QF-452.3.

QF-403.3 A change in the pipe wall thickness beyond the range qualified. See QF-202.2.1.

QF-403.4 A change in the thickness or cross-sectional area to be fused beyond the range specified.

QF-403.5 A change in fitting manufacturer.

QF-403.6 A change in nominal pipe (header) diameter.

QF-403.7 A change in header diameter beyond the range qualified. Qualification of a saddle design on two diameters qualifies for all diameters in between. (19)

QF-404 POSITION

QF-404.1 The addition of other fusing positions beyond that qualified. See QF-303.1.

QF-405 THERMAL CONDITIONS (19)

QF-405.1 A change in the heater surface temperature to a value beyond the range qualified in accordance with QF-202.2.1.

QF-405.2 A change in the interfacial pressure to a value beyond the range qualified in accordance with QF-202.2.1.

QF-405.3 A decrease in melt bead size or time from that qualified.

QF-405.4 An increase in heater plate removal time from that qualified.

QF-405.5 A decrease in the cool time at pressure from that qualified.

QF-405.6 A change in fusion voltage.

QF-405.7 A change in the nominal fusion time.

QF-405.8 A change in material fusing temperature beyond the range qualified.

QF-405.9 A change in initial heating pressure beyond the range qualified in accordance with QF-202.2.1.

QF-406 EQUIPMENT

QF-406.1 A change in the fusing machine manufacturer.

QF-406.2 A reduction in power source KVA.

QF-406.3 A change in power cord material, length, or diameter that reduces current at the coil to below the minimum qualified.

QF-406.4 A change in the manufacturer or model number of the processor.

Copyrighted material licensed to Fermi National Laboratory by Clarivate Analytics (US) LLC, subscriptions.techstreet.com, downloaded on 2020-09-23 17:45:20 +0000 by Fermi National Laboratory User.
No further reproduction or distribution is permitted.

QF-406.5 A change in the type of saddle clamp.

(**19**) **QF-406.6** An addition or deletion of a torque wrench to measure applied pressure.

(**19**) **QF-406.7** A change in type of sidewall-fusing machine from manual to hydraulic or vice versa.

QF-407 TECHNIQUE

QF-407.1 A change in fabrication location from the fabrication shop to field applications or vice versa.

QF-407.2 A change in the type or reduction in concentration of joint cleaning agent or solution.

QF-407.3 A change from a clean peeling scraping tool to any other type of tool.

QF-407.4 A change from a clean peeling scraping tool or 50- to 60-grit utility cloth to any other type of abrasion method. (**19**)

QF-420 MATERIAL GROUPINGS

High-density polyethylene pipe listed in Table QF-422 may be fused in accordance with Section IX.

Table QF-422
Material Grouping

Specification	Classification	Product Form
D3035	PE 2708	Pipe
	PE 3608	
F714	PE 4710	
D3261	PE 2708	Fittings
	PE 3608	
	PE 4710	

Copyrighted material licensed to Fermi National Laboratory by Clarivate Analytics (US) LLC, subscriptions.techstreet.com, downloaded on 2020-09-23 17:45:20 +0000 by Fermi National Laboratory User.
No further reproduction or distribution is permitted.

QF-450 PIPE FUSING LIMITS

(19)

Table QF-452.3
Pipe Fusing Diameter Limits

Size of Test Coupon — IPS [in. (mm)]	Size Qualified — IPS [in. (mm)]	
	Minimum	Maximum
(a) Butt Fusing		
Less than 6 [6.625 (168)]	None	Size tested
6 to less than 8 [6.625 (168) to less than 8.625 (219)]	None	Less than 8 [less than 8.625 (219)]
8 to 20 [8.625 (219) to 20 (508)]	8 [8.625 (219)]	20 [20 (508)]
Greater than 20 [greater than 20 (508)]	Greater than 20 [greater than 20 (508)]	Unlimited
(b) Electrofusion		
Less than 14 [14 (356)]	None	Less than 14 [14 (356)]
14 to 24 [14 (356) to 24 (610)]	14 [14 (356)]	24 [24 (610)]
Larger than 24 [24 (610)]	24 [24 (610)]	Unlimited
(c) Manual Butt Fusion		
Less than or equal to 6 [6.625 (168)]	None	Size tested

Copyrighted material licensed to Fermi National Laboratory by Clarivate Analytics (US) LLC, subscriptions.techstreet.com, downloaded on 2020-09-23 17:45:20 +0000 by Fermi National Laboratory User.
No further reproduction or distribution is permitted.

QF-460 GRAPHICS

QF-461 POSITIONS

Figure QF-461.1
Fusing Positions

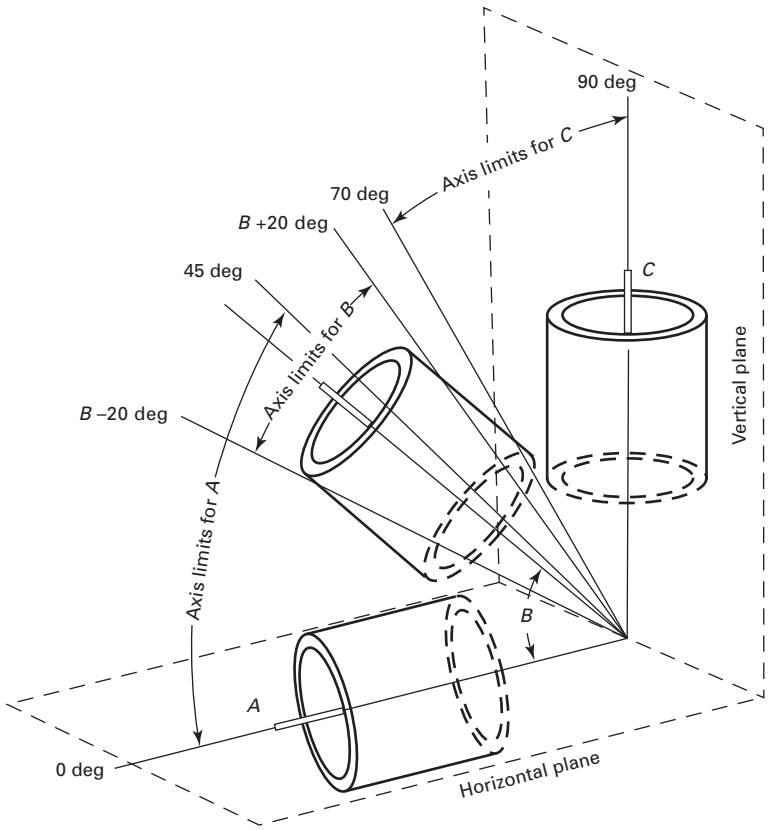

Tabulation of Positions in Joints

Position	Diagram Reference	Inclination of Axis, deg
Horizontal	A	0 ± 45
Intermediate	B	B ± 20
Vertical	C	90 ± 20

GENERAL NOTE: Inclination of the axis is measured from the horizontal reference plane toward the vertical.

Copyrighted material licensed to Fermi National Laboratory by Clarivate Analytics (US) LLC, subscriptions.techstreet.com, downloaded on 2020-09-23 17:45:20 +0000 by Fermi National Laboratory User.
No further reproduction or distribution is permitted.

Figure QF-461.2
Fusing Test Positions

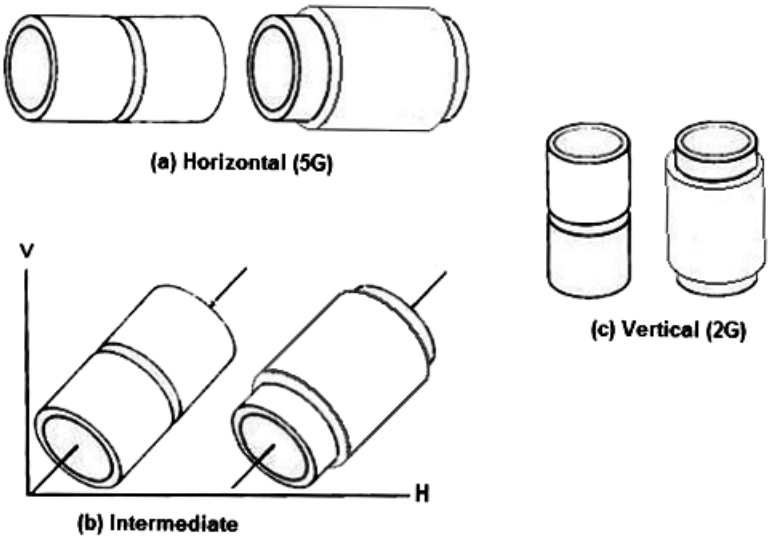

Copyrighted material licensed to Fermi National Laboratory by Clarivate Analytics (US) LLC, subscriptions.techstreet.com, downloaded on 2020-09-23 17:45:20 +0000 by Fermi National Laboratory User.
No further reproduction or distribution is permitted.

(19)

Figure QF-462(a)
Cross Section of Upset Beads for Butt-Fused PE Pipe

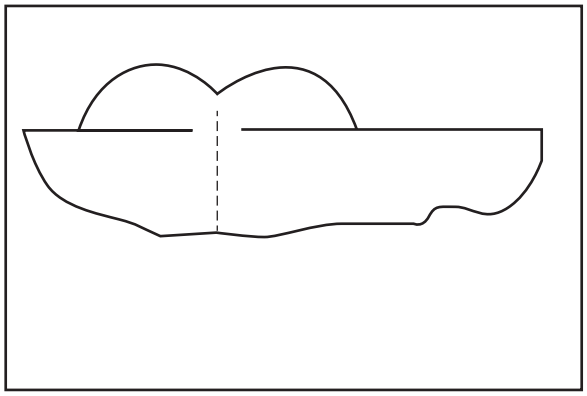

(a) Visually Acceptable — Uniform Bead Around Pipe

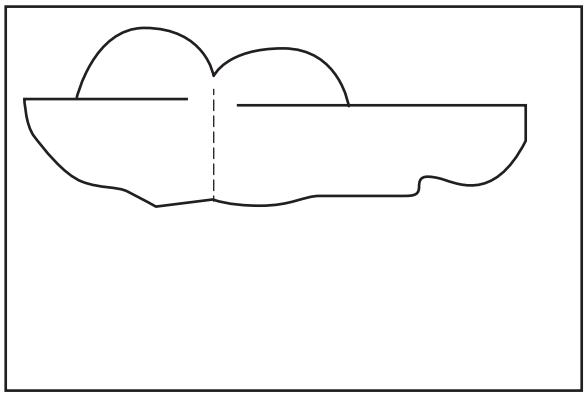

(b) Visually Acceptable — Nonuniform Bead Around Pipe, but Localized Diameter Mismatch Less Than 10% of the Nominal Wall Thickness

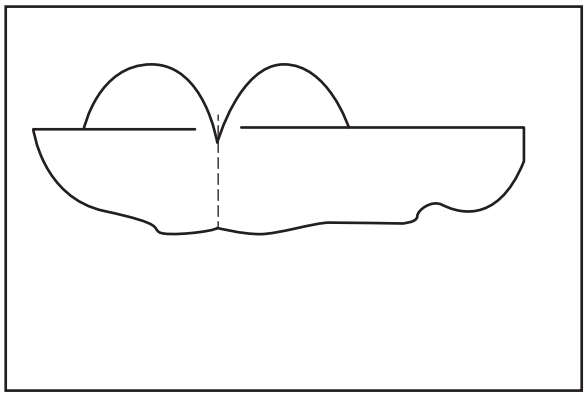

(c) Visually Unacceptable — V-Groove Too Deep at Pipe Tangent for Both Uniform and Nonuniform Beads

Copyrighted material licensed to Fermi National Laboratory by Clarivate Analytics (US) LLC, subscriptions.techstreet.com, downloaded on 2020-09-23 17:45:20 +0000 by Fermi National Laboratory User.
No further reproduction or distribution is permitted.

(19)

Figure QF-462(b)
Cross Section of Upset Beads for Sidewall-Fused Fitting (Profile at Crotch of Fitting)

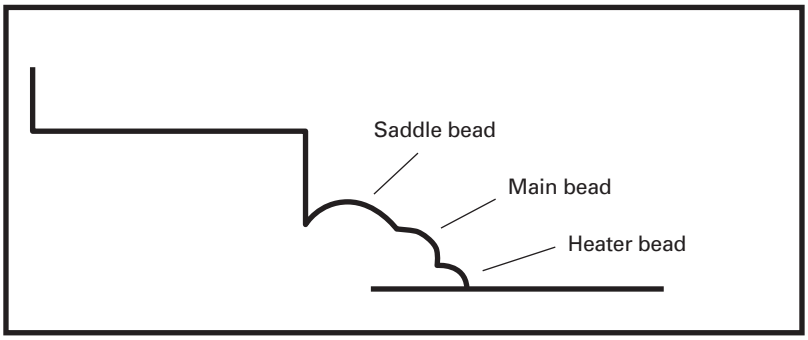

(a) Visually Acceptable — Similar Beads Around Fitting

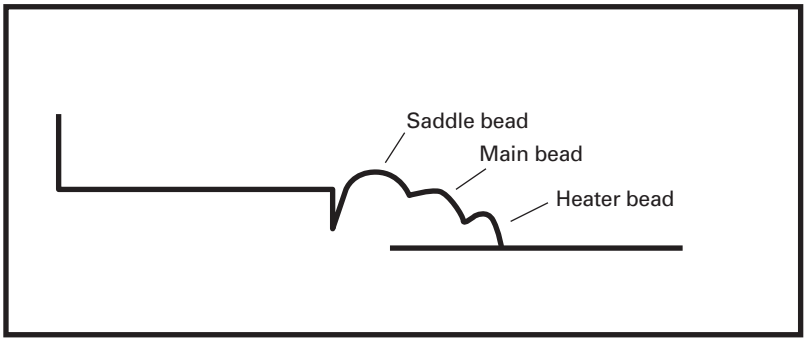

(b) Visually Unacceptable — Misalignment, Overheating, or Overpressurization (Crevice at Fitting, Abrupt Profile, Deep Ridges)

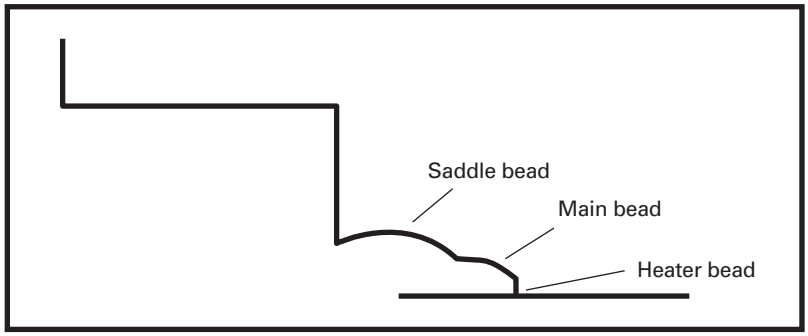

(c) Visually Unacceptable — Misalignment, Under-heating, or Under-pressurization (Low Profile, Udefined Beads)

Copyrighted material licensed to Fermi National Laboratory by Clarivate Analytics (US) LLC, subscriptions.techstreet.com, downloaded on 2020-09-23 17:45:20 +0000 by Fermi National Laboratory User.
No further reproduction or distribution is permitted.

(19)

Figure QF-463
Bend Test Specimen Removal, Configuration, and Testing

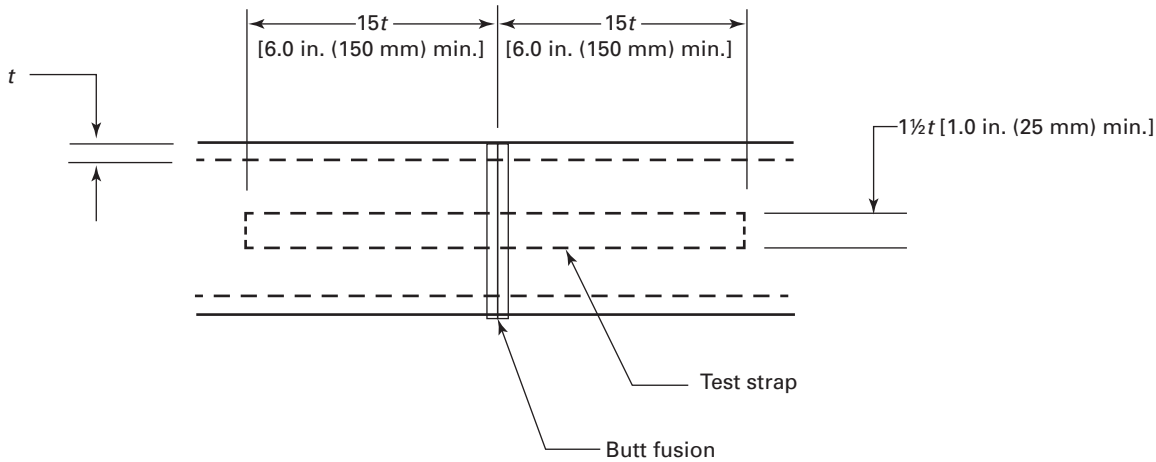

(a) Reverse-Bend Test Specimen Removal [for $t_{max} \leq$ 1 in. (25 mm)]

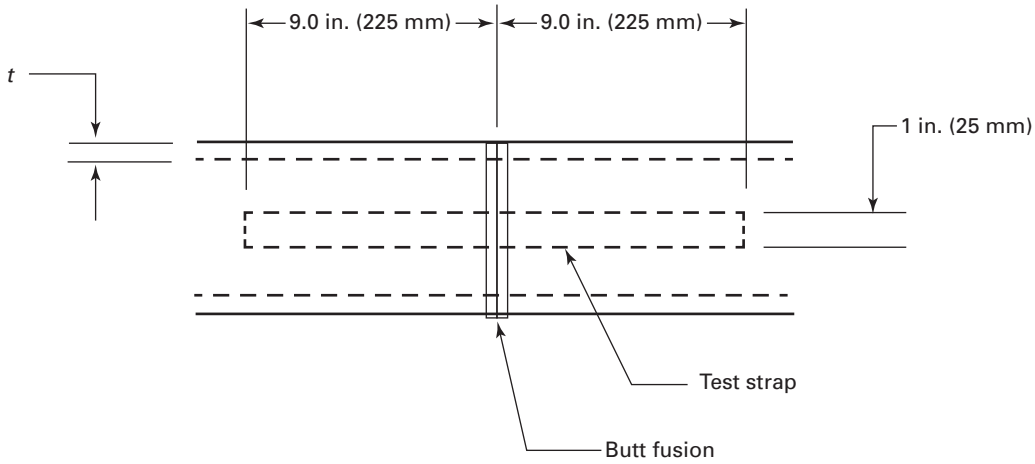

(b) Guided Side-Bend Test Specimen Removal [for t_{max} > 1 in. (25 mm)]

Copyrighted material licensed to Fermi National Laboratory by Clarivate Analytics (US) LLC, subscriptions.techstreet.com, downloaded on 2020-09-23 17:45:20 +0000 by Fermi National Laboratory User.
No further reproduction or distribution is permitted.

Figure QF-463
Bend Test Specimen Removal, Configuration, and Testing (Cont'd)

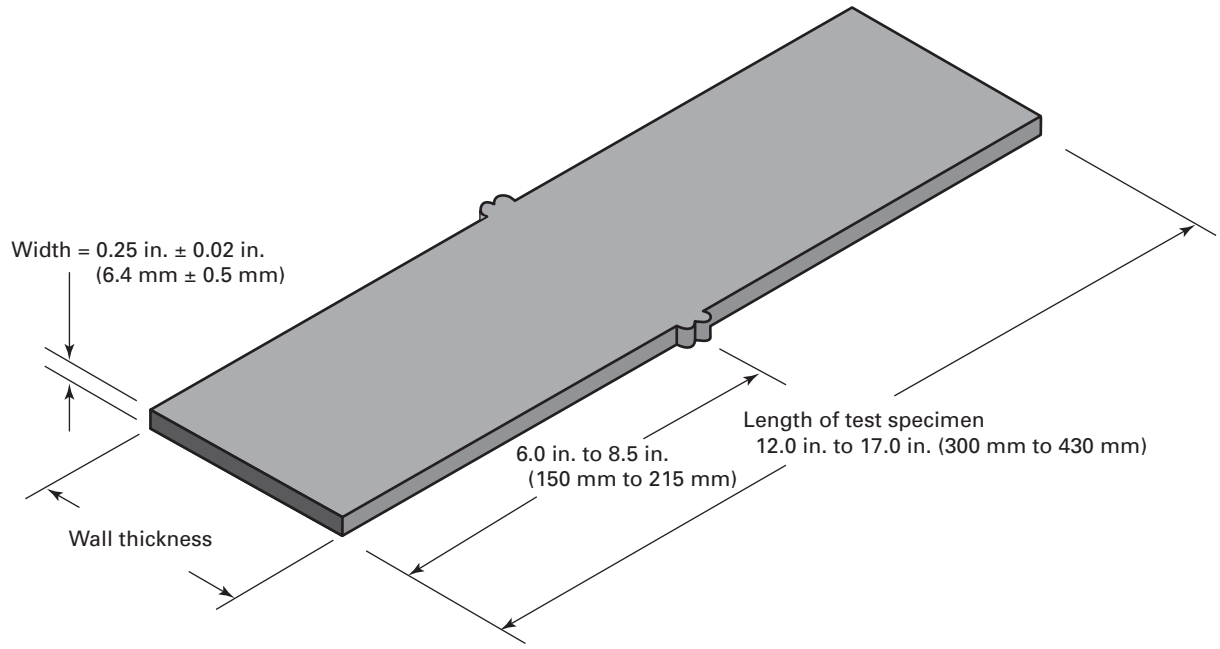

(c) Guided Side-Bend Test Specimen

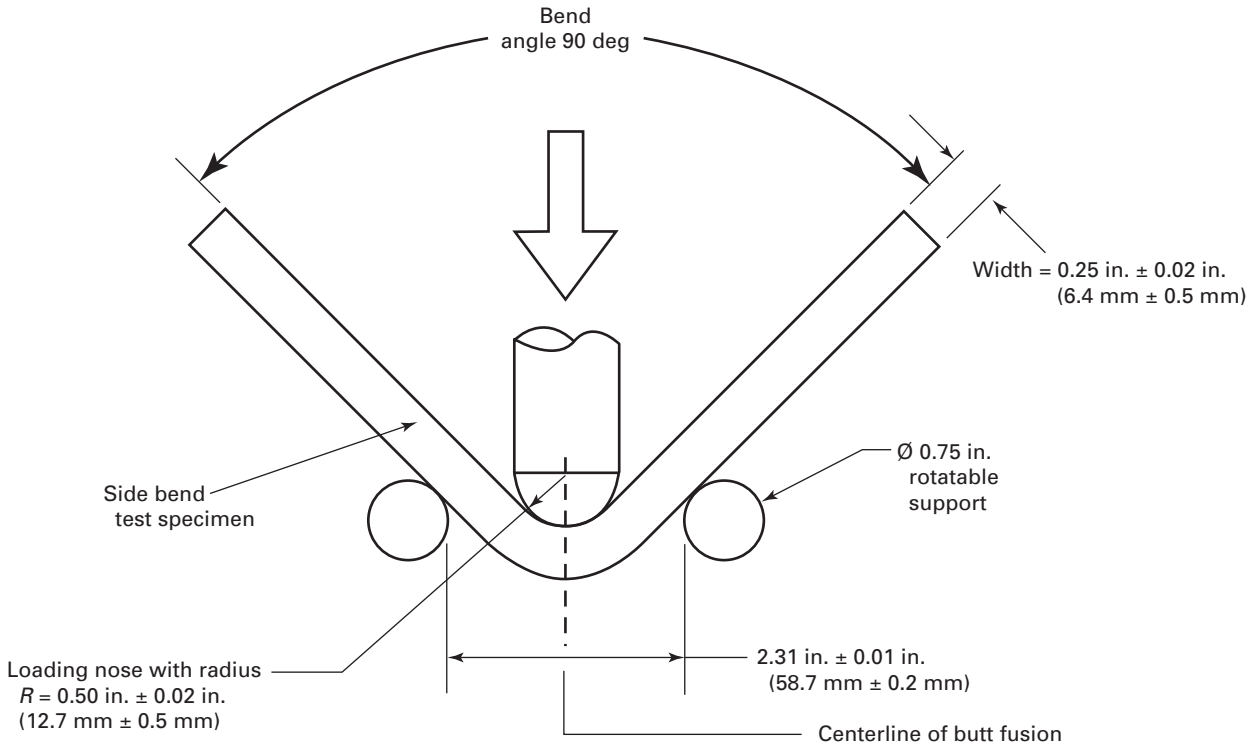

(d) Guided Side-Bend Test Machine Dimensions

Copyrighted material licensed to Fermi National Laboratory by Clarivate Analytics (US) LLC, subscriptions.techstreet.com, downloaded on 2020-09-23 17:45:20 +0000 by Fermi National Laboratory User.
No further reproduction or distribution is permitted.

Figure QF-463
Bend Test Specimen Removal, Configuration, and Testing (Cont'd)

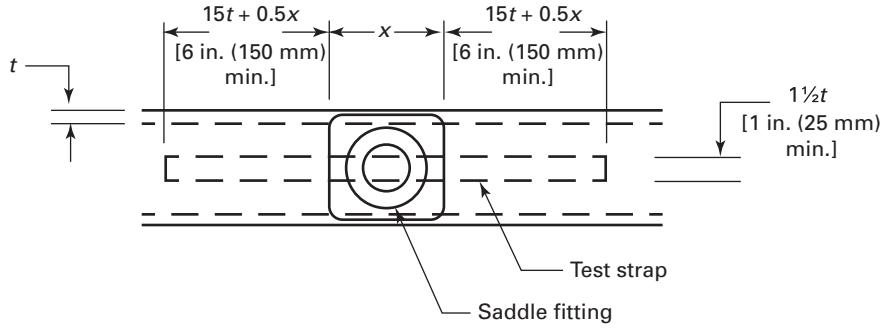

(e) Reverse-Bend Specimen Removal — Sidewall Fusion

Figure QF-464
HSTIT Specimen Configuration and Dimensions

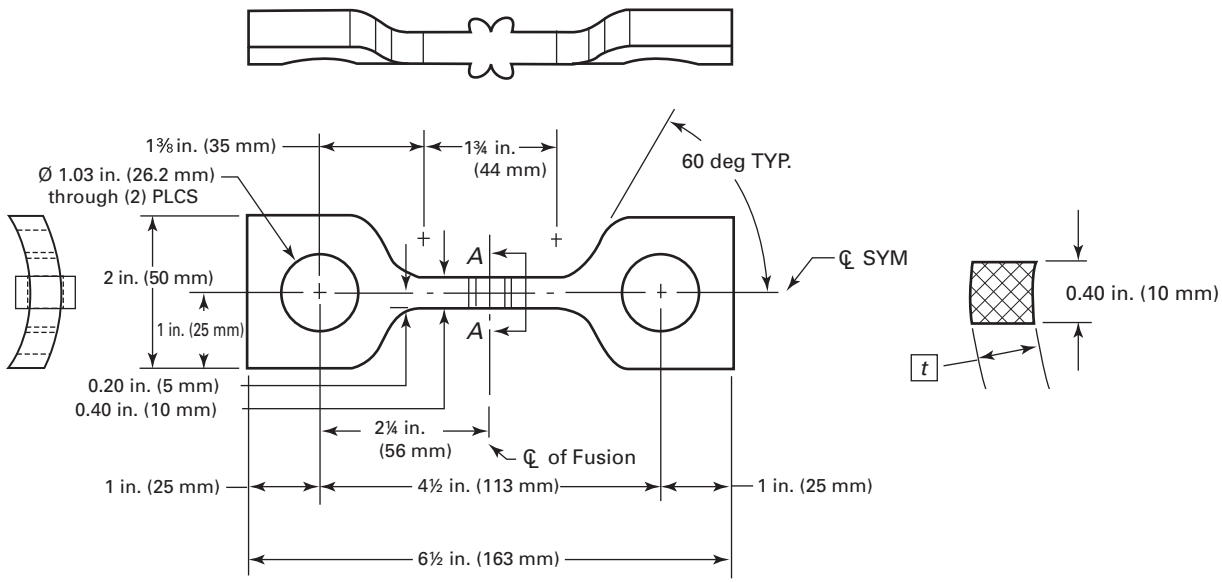

GENERAL NOTES:
(a) All machined surfaces 125 RMS or finer.
(b) All fractional dimensions shown are $\pm 1/16$ in. (±1.5875 mm).
(c) All decimal dimensions are ±0.010 in. (±0.3 mm).
(d) All internal radii $1/2$ in. (13 mm), external radii $3/8$ in. (10 mm).
(e) Fusion bead to remain in place after machining.

Copyrighted material licensed to Fermi National Laboratory by Clarivate Analytics (US) LLC, subscriptions.techstreet.com, downloaded on 2020-09-23 17:45:20 +0000 by Fermi National Laboratory User.
No further reproduction or distribution is permitted.

Figure QF-465
HSTIT Specimen Failure Examples

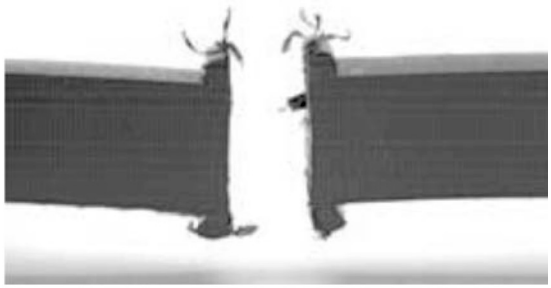

(a) Brittle Rupture

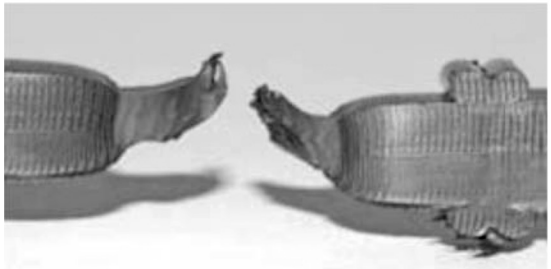

(b) Ductile Rupture Outside Fusion Interface

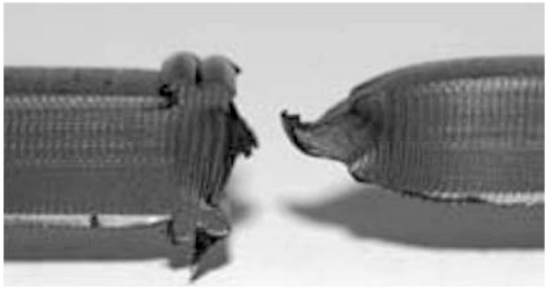

(c) Ductile Rupture Adjacent to Fusion Interface

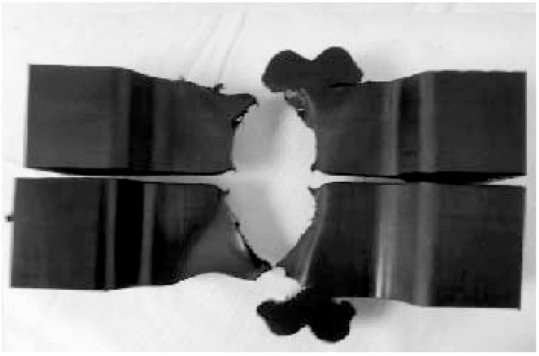

(d) Ductile Ruptures of Split Specimens

Copyrighted material licensed to Fermi National Laboratory by Clarivate Analytics (US) LLC, subscriptions.techstreet.com, downloaded on 2020-09-23 17:45:20 +0000 by Fermi National Laboratory User.
No further reproduction or distribution is permitted.

Figure QF-466
Electrofusion Crush Test

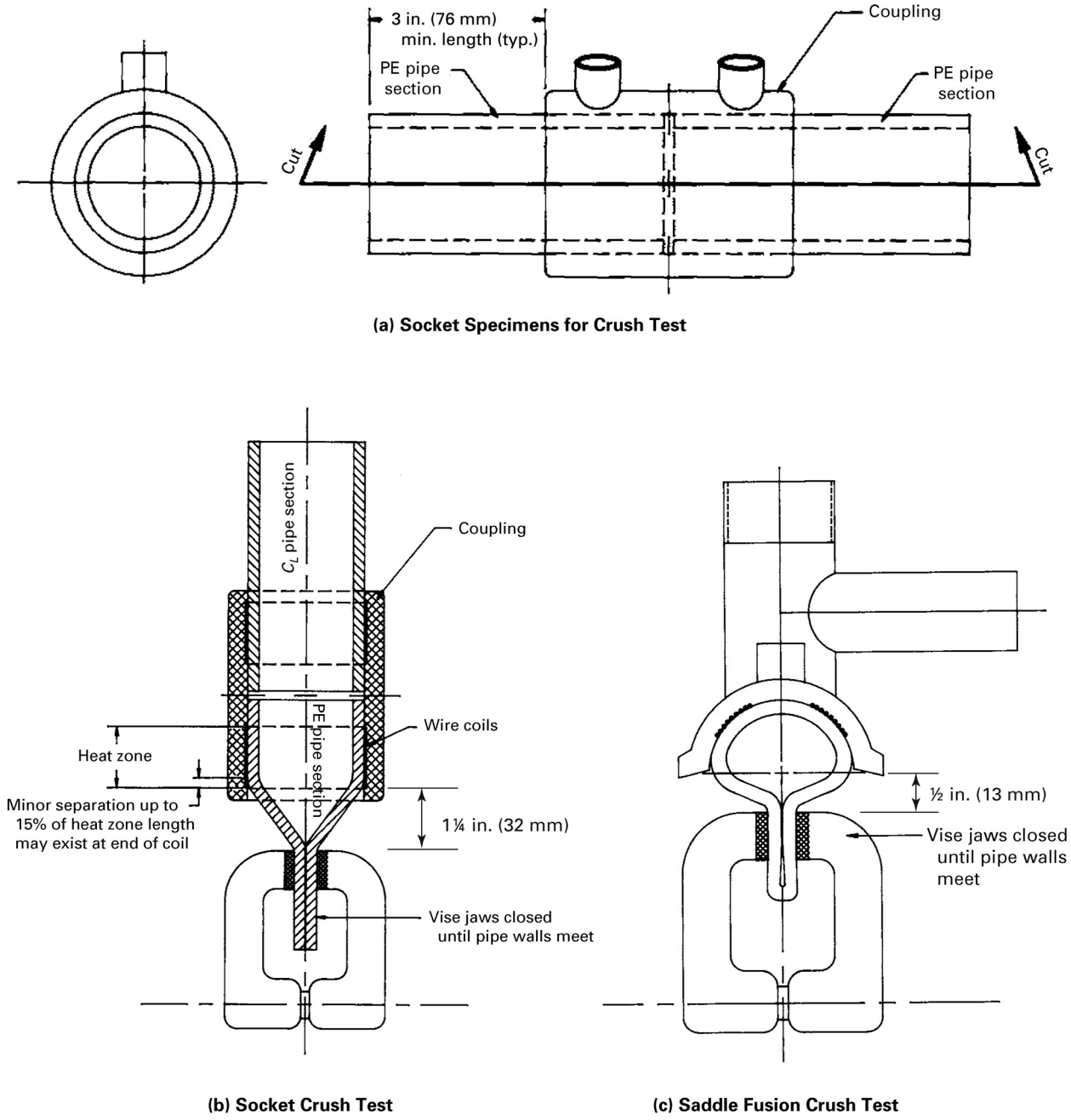

Copyrighted material licensed to Fermi National Laboratory by Clarivate Analytics (US) LLC, subscriptions.techstreet.com, downloaded on 2020-09-23 17:45:20 +0000 by Fermi National Laboratory User.
No further reproduction or distribution is permitted.

Figure QF-467
Electrofusion Bend Test

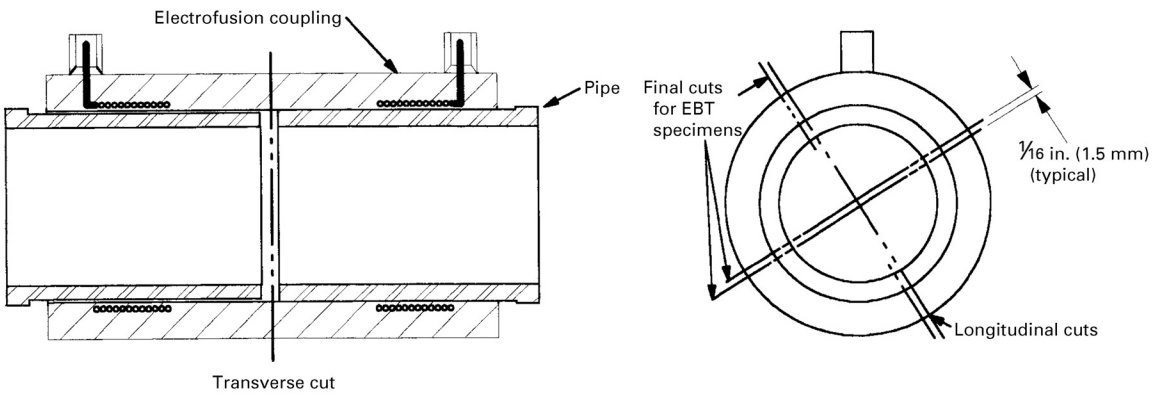

(a) Socket Fusion Bend Specimens

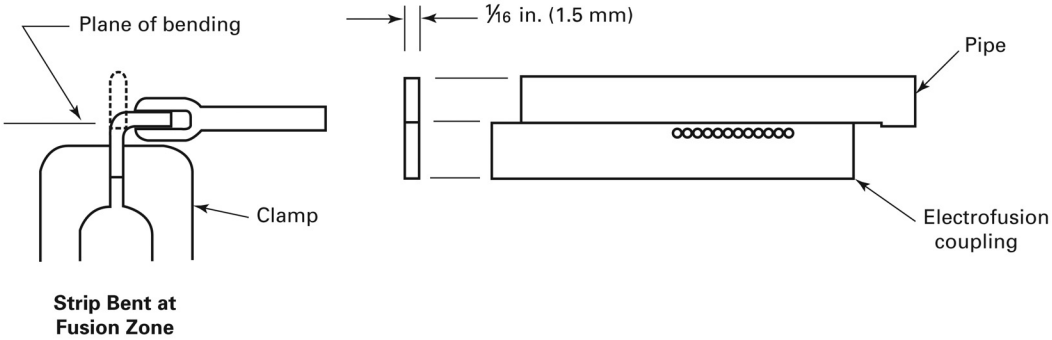

(b) Fusion Evaluation Bend Test

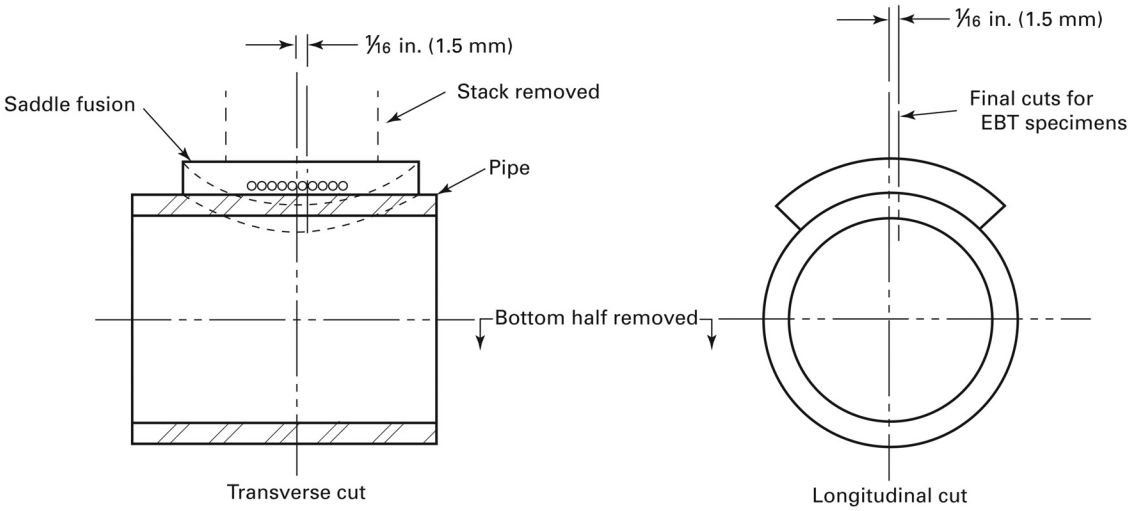

(c) Saddle Fusion Bend Specimens

Copyrighted material licensed to Fermi National Laboratory by Clarivate Analytics (US) LLC, subscriptions.techstreet.com, downloaded on 2020-09-23 17:45:20 +0000 by Fermi National Laboratory User.
No further reproduction or distribution is permitted.

Figure QF-468
Fusion Zone Void Criteria

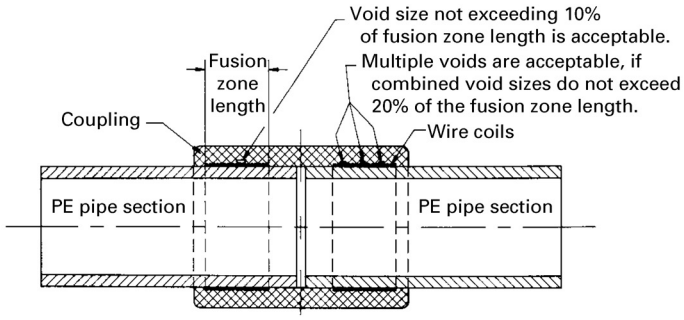

(a) Acceptable Voids

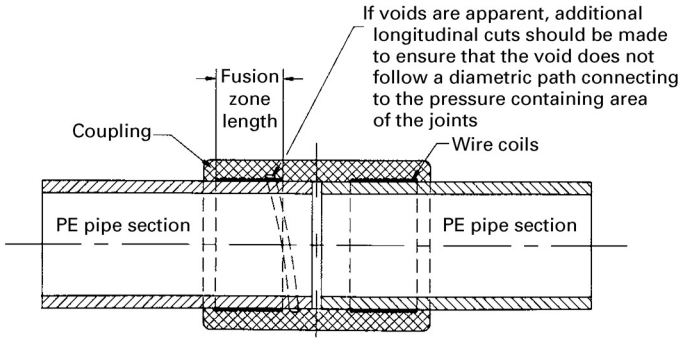

(b) Path Investigation

Copyrighted material licensed to Fermi National Laboratory by Clarivate Analytics (US) LLC, subscriptions.techstreet.com, downloaded on 2020-09-23 17:45:20 +0000 by Fermi National Laboratory User.
No further reproduction or distribution is permitted.

Figure QF-469
Electrofusion Peel Test

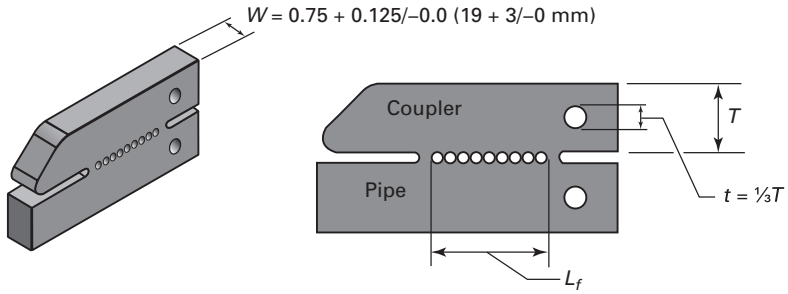

(a) Peel Test Sample Configuration

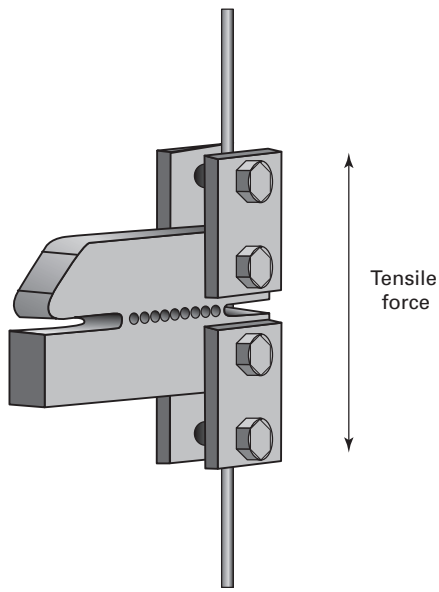

(b) Peel Test Loading

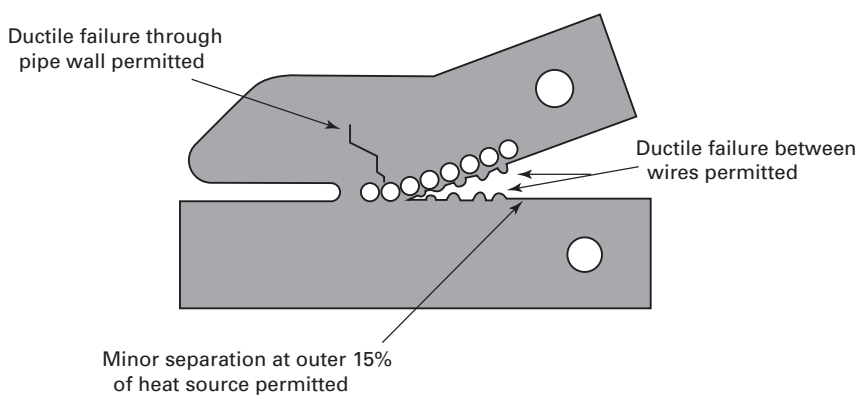

(c) Acceptable Peel Test Results

Copyrighted material licensed to Fermi National Laboratory by Clarivate Analytics (US) LLC, subscriptions.techstreet.com, downloaded on 2020-09-23 17:45:20 +0000 by Fermi National Laboratory User.
No further reproduction or distribution is permitted.

Figure QF-470
Short-Term Hydrostatic Test Specimen

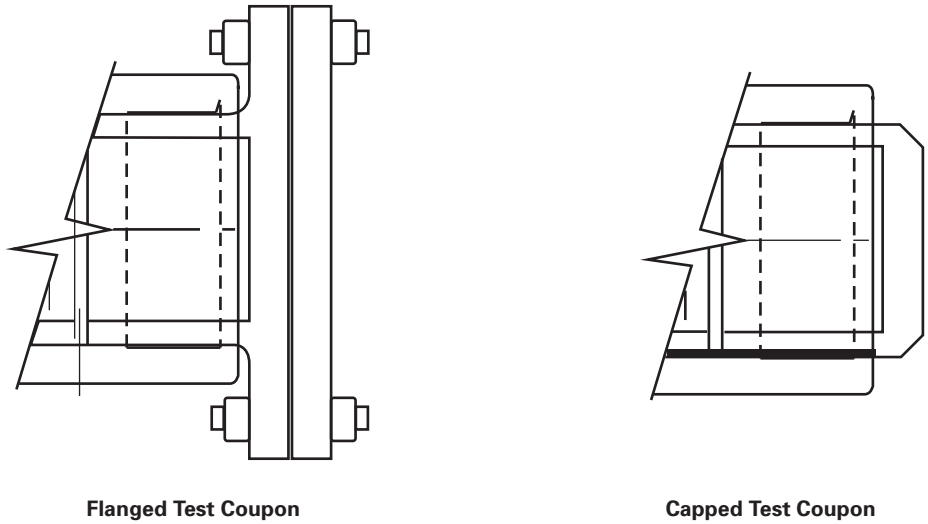

Copyrighted material licensed to Fermi National Laboratory by Clarivate Analytics (US) LLC, subscriptions.techstreet.com, downloaded on 2020-09-23 17:45:20 +0000 by Fermi National Laboratory User.
No further reproduction or distribution is permitted.

QF-480 FORMS

(19)

FORM QF-482(a) SUGGESTED FORMAT FOR BUTT-FUSING PROCEDURE SPECIFICATIONS (FPS OR SFPS)
(See QF-201.3, Section IX, ASME Boiler and Pressure Vessel Code)

Company Name _____ By _____

Fusing Procedure Specification No. _____ Date _____

Revision No. _____ Date _____

FPS Qualification ☐ By testing ☐ SFPS If qualified by testing, supporting PQR No.(s) _____

Fusing Process Type _____

Joints (QF-402) Details

Joint Type _____

Pipe End Preparation _____

Miter Joint Angle _____

Pipe Surface Alignment _____

Sketches, production drawings, weld symbols, or written description should show the general arrangement of the parts to be fused. Where applicable, the details of the joint groove may be specified.

Sketches may be attached to illustrate joint design.

Materials (QF-403)

Specification _____ Classification _____ to Specification _____ Classification _____

Pipe Size (Diameter) _____ Pipe Wall Thickness _____ Cross-Sectional Area _____

Other _____

Position (QF-404)

Pipe Position _____

Other _____

Thermal Conditions (QF-405)

Heater Surface Temperature Range _____

Fusing Interfacial Pressure Range _____

Drag Pressure Range _____ Butt-Fusing Pressure Range _____

Melt Bead Size Range _____ Heater Plate Removal Time Range _____

Cool-Down Time at Butt-Fusing Pressure Range _____

Equipment (QF-406)

Fusing Machine Manufacturer _____

Data Acquisition Used ☐ Yes ☐ No Data Acquisition Machine Manufacturer _____

Hydraulic Extension Hose Length _____

Technique (QF-407)

Location ☐ Fabrication Shop ☐ Field

_____

(07/19)

Copyrighted material licensed to Fermi National Laboratory by Clarivate Analytics (US) LLC, subscriptions.techstreet.com, downloaded on 2020-09-23 17:45:20 +0000 by Fermi National Laboratory User.
No further reproduction or distribution is permitted.

FORM QF-482(b) SUGGESTED FORMAT FOR ELECTROFUSION FUSING PROCEDURE SPECIFICATION (FPS OR MEFPS)
(See QF-201.3, Section IX, ASME Boiler and Pressure Vessel Code) (**19**)

Company Name_____ By_____

Fusing Procedure Specification No._____ Date_____

Revision No._____ Date_____

FPS qualification ☐ By testing ☐ MEFPS If qualified by testing, supporting PQR No.(s) _____

Joints (QF-402) Details

Joint Design _____

Pipe End Cut max. out-of-square _____

Maximum Fit-up Gap_____

Max. Axial Misalignment_____

Max. out-of-roundness _____

Sketches, production drawings, joint symbols, or written description should show the general arrangement of the parts to be fused. Where applicable, the details of the joint groove may be specified.

Materials (QF-403)

Fitting Specification_____Classification_____ to Pipe Specification_____Classification_____

Fitting Manufacturer_____ Pipe Size (diameter)_____ Pipe Wall Thickness_____

Thermal Conditions (QF-405)

Minimum material & fusing temperature_____°F (°C) Maximum material and fusing temperature_____°F (°C)

Nominal fusion time at minimum temp_____ Nominal fusion time at maximum temp_____

Minimum cool down time at min. temp_____ Minimum cool down time at max. temp_____

Fusion Voltage_____

Other_____

Equipment (QF-406)

Minimum Power Supply_____(KVA) Processor Manufacturer_____Model_____

Power Cord: Material_____Max. length _____ft (m) Min. Gage _____Min. Amps_____

Saddle Clamp Type_____ ☐ N/A

Other_____

Technique (QF-407)

Pre-scrape cleaning fluid_____ Post-scrape cleaning agent _____

Scraping Device_____ Pipe marker type_____

Other_____

(07/19)

Copyrighted material licensed to Fermi National Laboratory by Clarivate Analytics (US) LLC, subscriptions.techstreet.com, downloaded on 2020-09-23 17:45:20 +0000 by Fermi National Laboratory User.
No further reproduction or distribution is permitted.

(19) **FORM QF-482(c) SUGGESTED FORMAT FOR SIDEWALL-FUSING PROCEDURE SPECIFICATION (FPS or SFPS)**
(See QF-201.3, Section IX, ASME Boiler and Pressure Vessel Code)

Company Name_____ By_____

Fusing Procedure Specification No._____ Date_____

Revision No._____ Date_____

FPS qualification ☐ By testing ☐ SFPS If qualified by testing, supporting PQR No.(s) _____

Joints (QF-402) Details

Joint Design _____

Header size range_____

Fitting Manufacturer _____

Branch connection (diameter) range_____

Sketches, production drawings, joint symbols, or written description should show the general arrangement of the parts to be fused. Where applicable, the details of the joint groove may be specified.

Materials (QF-403)

Fitting Specification_____Classification_____ to Header Specification_____Classification_____

Thermal Conditions (QF-405)

Heater temperature_____°F (°C) Heating initial interfacial pressure _____

Heating soak interfacial pressure_____ Melt bead size or time at heat soak _____

Heater plate removal time_____ Fusing interfacial pressure _____

Cool-down time at fusing pressure _____ Cool-down time post-fusion _____

Other_____

Equipment (QF-406)

Fusing Machine Manufacturer_____ Model _____

Other_____

Technique (QF-407)

Abrasion device_____ Post-abrasion cleaning method _____

Other_____

(07/19)

Copyrighted material licensed to Fermi National Laboratory by Clarivate Analytics (US) LLC, subscriptions.techstreet.com, downloaded on 2020-09-23 17:45:20 +0000 by Fermi National Laboratory User.
No further reproduction or distribution is permitted.

FORM QF-483(a) SUGGESTED FORMAT FOR BUTT-FUSING PROCEDURE QUALIFICATION RECORDS (PQR)
[See QF-201.5(d), Section IX, ASME Boiler and Pressure Vessel Code] (**19**)

Company Name _____

Procedure Qualification Record No. _____ Date _____

FPS No. _____

Fusing Process(es) _____

Joints (QF-402)

Pipe Surface Alignment _____

Pipe End Preparation of Test Coupon

Material (QF-403)

Specification _____ Classification _____

to Specification _____ Classification _____

Pipe Size (Diameter) _____

Pipe Wall Thickness _____

Cross-Sectional Area _____

Other _____

Position (QF-404)

Position of Pipe _____

Other _____

Thermal Conditions (QF-405)

Heater Surface Temperature _____

Fusing Interfacial Pressure _____

Drag Pressure _____

Butt-Fusing Pressure _____

Melt Bead Size _____

Heater Plate Removal Time _____

Cool-Down Time at Butt-Fusing Pressure _____

Other _____

Equipment (QF-406)

Fusing Machine Manufacturer _____

Data Acquisition Used ☐ Yes ☐ No

Data Acquisition System Manufacturer _____

Hydraulic Extension Hose Length _____

Technique (QF-407)

Location ☐ Fabrication Shop ☐ Field

Other

(07/19)

Copyrighted material licensed to Fermi National Laboratory by Clarivate Analytics (US) LLC, subscriptions.techstreet.com, downloaded on 2020-09-23 17:45:20 +0000 by Fermi National Laboratory User.
No further reproduction or distribution is permitted.

FORM QF-483(a) (Back) **PQR No.** _____

Visual Examination (QF-141)

_____

_____

_____

_____

Elevated Temperature Sustained Pressure Tests (QF-142)

Joint No.	Heater Temperature	Interfacial Pressure	Result

Joint No.	Heater Temperature	Interfacial Pressure	Result

High-Speed Tensile Impact Tests (QF-144)

Joint No.	Spec. No.	Heater Temperature	Interfacial Pressure	Type of Failure	Location of Failure

Joint No.	Spec. No.	Heater Temperature	Interfacial Pressure	Type of Failure	Location of Failure

Attach additional sheet(s) for high-speed tensile test impact test data for pipe larger than NPS 4 (DN 100).

Fusing Operator's Name _____ Identification No. _____ Stamp No. _____

Tests Conducted By _____ Laboratory Test No. _____

We certify that the statements in this record are correct and that the test joints were prepared, fused, and tested in accordance with the requirements of Section IX of the ASME Boiler and Pressure Vessel Code.

Organization _____

Date _____ Certified By _____

(Detail of record of tests are illustrative only and may be modified to conform to the type and number of tests required by the Code.)

(07/15)

Copyrighted material licensed to Fermi National Laboratory by Clarivate Analytics (US) LLC, subscriptions.techstreet.com, downloaded on 2020-09-23 17:45:20 +0000 by Fermi National Laboratory User.
No further reproduction or distribution is permitted.

Copyrighted material licensed to Fermi National Laboratory by Clarivate Analytics (US) LLC, subscriptions.techstreet.com, downloaded on 2020-09-23 17:45:20 +0000 by Fermi National Laboratory User.
No further reproduction or distribution is permitted.

(19)

FORM QF-483(b) SUGGESTED FORMAT FOR ELECTROFUSION FUSING PROCEDURE QUALIFICATION RECORDS (PQR)

[See QF-201.5(d), Section IX, ASME Boiler and Pressure Vessel Code]

Page 1 of 3

Company Name_____

Procedure Qualification Record No._____ Date_____

FPS No._____

Fusing Process: Electrofusion Socket-type ☐ Electrofusion Saddle-type ☐

Joints (QF-402)

Joint Design_____

Manufacturer_____

Model No._____

Fit-up gap - See below

Coupon Detail

Material (QF-403)

Fitting Specification_____ Classification_____

Pipe Specification_____ Classification_____

Pipe Size (diameter)_____

Pipe Wall Thickness_____

Fitting Manufacturer_____

Other_____

Equipment (QF-406)

Power Supply_____

Power Cord Material_____ Gage____ Length_____

Processor Manufacturer_____

Model No._____

Saddle clamp_____

Technique (QF-407)

Scraping Device_____

Cleaning Agent_____

Low Temperature Coupons:

Joint Number:								
Temperature (QF-405.8)								
Fit-up Gap (QF-402.4)								
Pipe alignment								
Pipe out-of-round								
Fusion Voltage (QF-405.6)								
Fusion Time (QF-405.7)								
Cool-down time (QF-405.5)								

High Temperature Coupons:

Joint Number:								
Temperature (QF-405.8)								
Fit-up Gap (QF-402.4)								
Pipe alignment								
Pipe out-of-round								
Fusion Voltage (QF-405.6)								
Fusion Time (QF-405.7)								
Cool-down time (QF-405.5)								

(07/19)

FORM QF-483(b)

PQR No. _____

Visual Examination (QF-141)

_____

_____

_____

_____

Elevated Temperature Sustained Pressure Test (QF-142.1)

Low Temperature Coupons

Joint	Pressure	Failure Fitting	Failure Joint	Failure Pipe (Ductile)	Accept

High Temperature Coupons

Joint	Pressure	Failure Fitting	Failure Joint	Failure Pipe (Ductile)	Accept

Minimum Hydraulic Quick Burst Test (QF-142.2)

Low Temperature Coupons

Joint	Pressure	Failure Fitting	Failure Joint	Accept

High Temperature Coupons

Joint	Pressure	Failure Fitting	Failure Joint	Accept

Joint Integrity Test (QF-145)

Low Temperature Coupons — Crush Test (QF-145.1)

Joint	Specimen	Failure Bond	Ductile Fitting	Ductile Pipe	Ductile Wire	Accept
	1					
	2*					
	1					
	2*					

*Two specimens required for socket-type joints.

High Temperature Coupons — Crush Test (QF-145.1)

Joint	Specimen	Failure Bond	Ductile Fitting	Ductile Pipe	Ductile Wire	Accept
	1					
	2*					
	1					
	2*					

*Two specimens required for socket-type joints.

Low Temperature Coupons — Bend Test (QF-143.3)

Joint	Specimen	Visual Accept	Failure Bond	Ductile Fitting	Ductile Pipe	Ductile Wire	Accept
	1						
	2						
	3						
	4						
	1						
	2						
	3						
	4						

High Temperature Coupons — Bend Test (QF-143.3)

Joint	Specimen	Visual Accept	Failure Bond	Ductile Fitting	Ductile Pipe	Ductile Wire	Accept
	1						
	2						
	3						
	4						
	1						
	2						
	3						
	4						

(07/19)

Copyrighted material licensed to Fermi National Laboratory by Clarivate Analytics (US) LLC, subscriptions.techstreet.com, downloaded on 2020-09-23 17:45:20 +0000 by Fermi National Laboratory User.
No further reproduction or distribution is permitted.

PQR No. _____

FORM QF-483(b)

Electrofusion Axial Load Resistance Test (QF-144.2)

Low Temperature Coupon Tensile Test [QF-144.2(a)]

Joint	Pipe Elongation	Failure Pipe Break	Accept

High Temperature Coupon Tensile Test [QF-144.2(a)]

Joint	Pipe Elongation	Failure Pipe Break	Accept

Low Temperature Coupon Peel Test [QF-144.2.1(b)(1)]

Joint	Specimen	Failure Brittle Sep	Ductile Tears Wire	Ductile Tears Fitting	Ductile Tears Pipe	Accept
	1					
	2					
	3					
	4					

High Temperature Coupon Peel Test [QF-144.2.1(b)(1)]

Joint	Specimen	Failure Brittle Sep	Ductile Tears Wire	Ductile Tears Fitting	Ductile Tears Pipe	Accept
	1					
	2					
	3					
	4					

Short-Term Hydrostatic Test [QF-144.2.1(b)(2)]

Joint	Failure Fitting	Failure Fusion Interface	Accept

Short-Term Hydrostatic Test [QF-144.2.1(b)(2)]

Joint	Failure Fitting	Failure Fusion Interface	Accept

Impact Resistance* (QF-145.2)
***Only when required by contract**

Low Temperature Coupon Impact Resistance (QF-145.2.4)

Joint	Failure Bond Separation >15%	Accept

High Temperature Coupon Impact Resistance (QF-145.2.4)

Joint	Failure Bond Separation >15%	Accept

Attach additional sheet(s) for explanation as required.

Fusing Operator Name _____ Identification No. _____ Stamp No._____

Tests Conducted by_____ Laboratory Test No.(s) _____

We certify that the statements in this record are correct and that the test joints were prepared, fused, and tested in accordance with the requirements of Section IX of the ASME Boiler and Pressure Vessel Code.

Manufacturer or Contractor_____

Date_____ Certified by_____

(Record of test details are illustrative only and may be modified to conform to the type and number of tests required by the Code.)

(07/19)

Copyrighted material licensed to Fermi National Laboratory by Clarivate Analytics (US) LLC, subscriptions.techstreet.com, downloaded on 2020-09-23 17:45:20 +0000 by Fermi National Laboratory User.
No further reproduction or distribution is permitted.

(19)

FORM QF-483(c) SUGGESTED FORMAT FOR SIDEWALL-FUSING PROCEDURE QUALIFICATION RECORDS (PQR)
[See QF-201.5(d), Section IX, ASME Boiler and Pressure Vessel Code]

Company Name _____

Procedure Qualification Record No. _____ Date _____

FPS No. _____

Fusing Process(es) _____

Joints (QF-402)

Fitting Manufacturer _____

Material (QF-403)

Fitting Specification _____ Classification _____

to Header Specification _____ Classification _____

Branch Size (Diameter) _____

Header Size (Diameter) _____

Fitting Projected Base Area/Cross-Sectional Area _____

Other _____

Position (QF-404)

Position of Header _____

Position of Branch _____

Other _____

Thermal Conditions (QF-405)

Heater Surface Temperature _____

Drag Pressure _____

Heating Initial Interfacial Pressure _____

Time at Pressure _____

Heat Soak Interfacial Pressure _____

Melt Bead Size or Time _____

Heater Plate Removal Time _____

Fusing Pressure _____

Cool-Down Time at Fusing Pressure _____

Other _____

Equipment (QF-406)

Fusing Machine Manufacturer _____

Data Acquisition Used ☐ Yes ☐ No

Data Acquisition System Manufacturer _____

Hydraulic Extension Hose Length _____

Technique (QF-407)

Location ☐ Fabrication Shop ☐ Field

Cleaning Agent or Method _____

Abrasion Method _____

Other

(07/19)

Copyrighted material licensed to Fermi National Laboratory by Clarivate Analytics (US) LLC, subscriptions.techstreet.com, downloaded on 2020-09-23 17:45:20 +0000 by Fermi National Laboratory User.
No further reproduction or distribution is permitted.

FORM QF-483(c) (Back) **PQR No.** _____

Visual Examination (QF-141)

_____

_____

_____

_____

Elevated Temperature Sustained Pressure Tests (QF-142)

Joint No.	Heater Temperature	Interfacial Pressure	Result

Impact Resistance Tests (QF-145)

Joint No.	Spec. No.	Heater Temperature	Interfacial Pressure	Type of Failure	Location of Failure

Other

Fusing Operator's Name _____ Identification No. _____ Stamp No. _____

Tests Conducted By _____ Laboratory Test No. _____

We certify that the statements in this record are correct and that the test joints were prepared, fused, and tested in accordance with the requirements of Section IX of the ASME Boiler and Pressure Vessel Code.

Organization _____

Date _____ Certified By _____

(Detail of record of tests are illustrative only and may be modified to conform to the type and number of tests required by the Code.)

(07/19)

Copyrighted material licensed to Fermi National Laboratory by Clarivate Analytics (US) LLC, subscriptions.techstreet.com, downloaded on 2020-09-23 17:45:20 +0000 by Fermi National Laboratory User.
No further reproduction or distribution is permitted.

(19)

FORM QF-484(a) SUGGESTED FORMAT FOR BUTT-FUSING MACHINE OPERATOR PERFORMANCE QUALIFICATIONS (FPQ)

(See QF-301.4, Section IX, ASME Boiler and Pressure Vessel Code)

Fusing Machine Operator's Name _____ Identification No. _____

Test Description *(Information Only)*

Type of Test: ☐ Original qualification ☐ Requalification

Identification of FPS or SFPS Followed _____

Date Coupon Was Fused _____

Pipe Specification _____ Classification _____ to Specification _____ Classification _____

Pipe Size (Diameter) _____ Pipe Wall Thickness _____

Testing Conditions and Qualification Limits

Fusing Variables (QF-360)	Actual Values	Range Qualified
Pipe Material		
Pipe Size (Diameter)		
Pipe Position		
Fusing Machine Manufacturer		

RESULTS

Visual Examination of Completed Joint [QF-305.2(a)] _____

Examination of Data Acquisition Output [QF-305.2(b)] _____

Bend Tests (QF-302.2)

Specimen No.	Type of Bend	Result	Specimen No.	Type of Bend	Result

Bend Specimens Evaluated By _____ Company _____

Mechanical Tests Conducted By _____ Laboratory Test No. _____

Fusing Supervised By _____

Data Acquisition Output Examined By _____

We certify that the statements in this record are correct and that the test coupons were prepared, fused, and tested in accordance with the requirements of Section IX of the ASME Boiler and Pressure Vessel Code.

Organization _____

Date _____ Certified by _____

(07/19)

Copyrighted material licensed to Fermi National Laboratory by Clarivate Analytics (US) LLC, subscriptions.techstreet.com, downloaded on 2020-09-23 17:45:20 +0000 by Fermi National Laboratory User.
No further reproduction or distribution is permitted.

Copyrighted material licensed to Fermi National Laboratory by Clarivate Analytics (US) LLC, subscriptions.techstreet.com, downloaded on 2020-09-23 17:45:20 +0000 by Fermi National Laboratory User.
No further reproduction or distribution is permitted.

(19)

FORM QF-484(b) SUGGESTED FORMAT FOR ELECTROFUSION FUSING OPERATOR PERFORMANCE QUALIFICATION (FPQ)
(See QF-301.4, Section IX, ASME Boiler and Pressure Vessel Code)

Electrofusion Fusing Operator's Name _____ Identification No. _____

Test Description *(Information Only)*

Type of test: _____ Original Qualification _____ Requalification _____

Identification of FPS or MEFPS Followed _____

Date Coupon Was Fused _____

Fitting Specification _____ Classification ____ to Pipe Specification _____ Classification _____

Pipe Size (diameter) _____ Pipe Wall Thickness _____

Testing Conditions and Qualification Limits

Fusing Variables (QF-360)	Actual Value	Range Qualified
Socket or Saddle	_____	_____
Pipe Material	_____	_____
Pipe Diameter	_____	_____

RESULTS

Visual examination of completed joint [QF-305.2(a)] _____

Examination of data acquisition output [QF-305.2(b)] _____

Joint Integrity Test (QF-143.3)

Type of test: Bend Test (QF-143.3) ☐ Crush Test (QF-145.1) ☐

Specimen	Failure Bond Area	Ductile Fitting	Ductile Pipe	Ductile Wire	Result

Test specimens evaluated by _____ Company _____

Mechanical tests conducted by _____ Laboratory Test No. _____

Fusing supervised by _____

Data acquisition output reviewed by _____

We certify that the statements in this record are correct and that the test coupons were prepared, fused, and tested in accordance with the requirements of Section IX of the ASME Boiler and Pressure Vessel Code.

Date _____ Manufacturer or Contractor _____

Certified by _____

(07/19)

(19)

FORM QF-484(c) SUGGESTED FORMAT FOR SIDEWALL-FUSING MACHINE OPERATOR PERFORMANCE QUALIFICATIONS (FPQ)
(See QF-301.4, Section IX, ASME Boiler and Pressure Vessel Code)

Fusing Machine Operator's Name _____ Identification No. _____

Test Description *(Information Only)*

Type of Test: ☐ Original qualification ☐ Requalification

Identification of FPS or SFPS Followed _____

Date Coupon Was Fused _____

Branch Specification _____ Classification _____ to Header Specification _____ Classification _____

Branch Connection Size (Diameter) _____ Header Size (Diameter) _____ Header Thickness _____

Header Position _____ Branch Position _____

Testing Conditions and Qualification Limits

Fusing Variables (QF-360)	Actual Values	Range Qualified
Pipe Material		
Fusing Machine Type (Manual or Hydraulic)		
Fusing Machine Manufacturer		

RESULTS

Visual Examination of Completed Joint [QF-305.2(a)] _____

Examination of Data Acquisition Output [QF-305.2(b)] _____

Bend Tests (QF-302.2)

Specimen No.	Type of Bend	Result	Specimen No.	Type of Bend	Result

Mechanical Tests Conducted By _____ Laboratory Test No. _____

Fusing Supervised By _____

Data Acquisition Output Examined By _____

We certify that the statements in this record are correct and that the test coupons were prepared, fused, and tested in accordance with the requirements of Section IX of the ASME Boiler and Pressure Vessel Code.

Organization _____

Date _____ Certified by _____

(07/19)

Copyrighted material licensed to Fermi National Laboratory by Clarivate Analytics (US) LLC, subscriptions.techstreet.com, downloaded on 2020-09-23 17:45:20 +0000 by Fermi National Laboratory User.
No further reproduction or distribution is permitted.

FORM QF-485 SUGGESTED FORMAT FOR PLASTIC PIPE FUSING DATA ACQUISITION LOG REVIEW (See QF-131 Section IX, ASME Boiler and Pressure Vessel Code)

(**19**)

Job Information _____ Job Number _____

Fusing Machine Operator Name _____ Fusing Machine Operator Identification _____

FPS or SFPS Used _____ Date _____ Time _____

Fusing Machine Identification _____ Fusing Machine Manufacturer _____ Joint Number _____

Pipe Specification _____ Classification _____ to Specification _____ Classification _____

Pipe Size (Diameter) _____ Pipe Wall Thickness _____ Joint Configuration _____

FUSING VARIABLES

Heater Surface Temperature _____ Within Qualification Range ☐ Yes ☐ No

Interfacial Fusing Pressure _____ Within Qualification Range ☐ Yes ☐ No

Drag Pressure _____

Butt-Fusing Pressure: Within Qualification Range ☐ Yes ☐ No

Calculated Value _____ Recorded Hydraulic-Fusing Pressure _____ Acceptable ☐ Yes ☐ No

Butt-Fusing Pressure Drop to Less Than Drag Pressure? ☐ Yes ☐ No

Gauge Pressure During Initial Heat Cycle _____ Elapsed Time During Initial Heat Cycle _____

Gauge Pressure During Heat-Soak Cycle _____ Elapsed Time During Heat-Soak Cycle _____

Gauge Pressure During Fusing and Cool Cycle _____

Elapsed Time During Fusing and Cool Cycle _____ Within Qualification Range ☐ Yes ☐ No

Melt Bead Size _____ Within Qualification Range ☐ Yes ☐ No

Heater Plate Removal Time _____ Within Qualification Range ☐ Yes ☐ No

Data Logger Probe _____ External Probe _____

Data Acquisition System Manufacturer _____

Review of the Recorded Pressure vs. Time Diagram

Acceptable ☐ Yes ☐ No

Data Acquisition Acceptable ☐ Yes ☐ No

Examiner name _____ Examiner signature _____

Date _____

(07/19)

Copyrighted material licensed to Fermi National Laboratory by Clarivate Analytics (US) LLC, subscriptions.techstreet.com, downloaded on 2020-09-23 17:45:20 +0000 by Fermi National Laboratory User.
No further reproduction or distribution is permitted.

QF-490 DEFINITIONS

QF-491 GENERAL

Terms relating to fusing used in Section IX are listed in QG-109. Other common terms relating to fusing are defined in ASTM F412, Standard Terminology Relating to Plastic Piping Systems.

QF-492 DEFINITIONS

Definitions relocated to QG-109.

Copyrighted material licensed to Fermi National Laboratory by Clarivate Analytics (US) LLC, subscriptions.techstreet.com, downloaded on 2020-09-23 17:45:20 +0000 by Fermi National Laboratory User.
No further reproduction or distribution is permitted.

NONMANDATORY APPENDIX B
WELDING AND BRAZING FORMS

B-100 FORMS

This Nonmandatory Appendix illustrates sample formats for Welding and Brazing Procedure Specifications, Procedure Qualification Records, and Performance Qualification.

B-101 WELDING

Forms QW-484A and QW-484B is a suggested format for Welding Procedure Specifications (WPS); Form QW-483 is a suggested format for Procedure Qualification Records (PQR). These forms are for the shielded metal-arc (SMAW), submerged-arc (SAW), gas metal-arc (GMAW), and gas tungsten-arc (GTAW) welding processes, or a combination of these processes.

Forms for other welding processes may follow the general format of Forms QW-482 and QW-483, as applicable.

Forms QW-484A and QW-484B are suggested formats for Welder or Welding Operator Performance Qualification (WPQ) for groove or fillet welds.

Form QW-485 is a suggested format for Demonstration of Standard Welding Procedure Specifications.

B-102 BRAZING

Form QB-482 is a suggested format for Brazing Procedure Specifications (BPS); Form QB-483 is a suggested format for Procedure Qualifications Records (PQR). These forms are for torch brazing (TB), furnace brazing (FB), induction brazing (IB), resistance brazing (RB), and dip brazing (DB) processes.

Forms for other brazing processes may follow the general format of Forms QB-482 and QB-483, as applicable.

Form QB-484 is a suggested format for Brazer or Brazing Operator Performance Qualification (BPQ).

Copyrighted material licensed to Fermi National Laboratory by Clarivate Analytics (US) LLC, subscriptions.techstreet.com, downloaded on 2020-09-23 17:45:20 +0000 by Fermi National Laboratory User.
No further reproduction or distribution is permitted.

FORM QW-482 SUGGESTED FORMAT FOR WELDING PROCEDURE SPECIFICATIONS (WPS)
(See QW-200.1, Section IX, ASME Boiler and Pressure Vessel Code)

Organization Name _____ By _____

Welding Procedure Specification No. _____ Date _____ Supporting PQR No.(s) _____

Revision No. _____ Date _____

Welding Process(es) _____ Type(s) _____
(Automatic, Manual, Machine, or Semi-Automatic)

JOINTS (QW-402) Details

Joint Design _____

Root Spacing _____

Backing: Yes _____ No _____

Backing Material (Type) _____
(Refer to both backing and retainers)

☐ Metal ☐ Nonfusing Metal

☐ Nonmetallic ☐ Other

Sketches, Production Drawings, Weld Symbols, or Written Description should show the general arrangement of the parts to be welded. Where applicable, the details of weld groove may be specified.

Sketches may be attached to illustrate joint design, weld layers, and bead sequence (e.g., for toughness procedures, for multiple process procedures, etc.)

*BASE METALS (QW-403)

P-No. _____ Group No. _____ to P-No. _____ Group No. _____

OR

Specification and type, grade, or UNS Number _____

to Specification and type, grade, or UNS Number _____

OR

Chem. Analysis and Mech. Prop. _____

to Chem. Analysis and Mech. Prop. _____

Thickness Range:

Base Metal: Groove _____ Fillet _____

Maximum Pass Thickness ≤ $^1/_2$ in. (13 mm) (Yes) _____ (No) _____

Other _____

*FILLER METALS (QW-404)

	1	2
Spec. No. (SFA)		
AWS No. (Class)		
F-No.		
A-No.		
Size of Filler Metals		
Filler Metal Product Form		
Supplemental Filler Metal		
Weld Metal		
Deposited Thickness:		
Groove		
Fillet		
Electrode-Flux (Class)		
Flux Type		
Flux Trade Name		
Consumable Insert		
Other		

*Each base metal-filler metal combination should be specified individually.

(07/17)

Copyrighted material licensed to Fermi National Laboratory by Clarivate Analytics (US) LLC, subscriptions.techstreet.com, downloaded on 2020-09-23 17:45:20 +0000 by Fermi National Laboratory User.
No further reproduction or distribution is permitted.

FORM QW-482 (Back)

WPS No. _____ **Rev.** _____

POSITIONS (QW-405)
Position(s) of Groove _____
Welding Progression: Up _____ Down _____
Position(s) of Fillet _____
Other _____

POSTWELD HEAT TREATMENT (QW-407)
Temperature Range _____
Time Range _____
Other _____

PREHEAT (QW-406)
Preheat Temperature, Minimum _____
Interpass Temperature, Maximum _____
Preheat Maintenance _____
Other _____
(Continuous or special heating, where applicable, should be specified)

GAS (QW-408)

	Percent Composition		
	Gas(es)	(Mixture)	Flow Rate
Shielding			
Trailing			
Backing			
Other			

ELECTRICAL CHARACTERISTICS (QW-409)

Weld Pass(es)	Process	Filler Metal		Current Type and Polarity	Amps (Range)	Wire Feed Speed (Range)	Energy or Power (Range)	Volts (Range)	Travel Speed (Range)	Other (e.g., Remarks, Comments, Hot Wire Addition, Technique, Torch Angle, etc.)
		Classification	Diameter							

Amps and volts, or power or energy range, should be specified for each electrode size, position, and thickness, etc.

Pulsing Current _____ Heat Input (max.) _____

Tungsten Electrode Size and Type _____
(Pure Tungsten, 2% Thoriated, etc.)

Mode of Metal Transfer for GMAW (FCAW) _____
(Spray Arc, Short-Circuiting Arc, etc.)

Other _____

TECHNIQUE (QW-410)
String or Weave Bead _____
Orifice, Nozzle, or Gas Cup Size _____
Initial and Interpass Cleaning (Brushing, Grinding, etc.) _____
_____
Method of Back Gouging _____
Oscillation _____
Contact Tube to Work Distance _____
Multiple or Single Pass (Per Side) _____
Multiple or Single Electrodes _____
Electrode Spacing _____
Peening _____
Other _____
_____
_____

(07/17)

Copyrighted material licensed to Fermi National Laboratory by Clarivate Analytics (US) LLC, subscriptions.techstreet.com, downloaded on 2020-09-23 17:45:20 +0000 by Fermi National Laboratory User.
No further reproduction or distribution is permitted.

(19)

FORM QW-483 SUGGESTED FORMAT FOR PROCEDURE QUALIFICATION RECORDS (PQR)
(See QW-200.2, Section IX, ASME Boiler and Pressure Vessel Code)
Record Actual Variables Used to Weld Test Coupon

Organization Name _____
Procedure Qualification Record No. _____ Date _____
WPS No. _____
Welding Process(es) _____
Types (Manual, Automatic, Semi-Automatic) _____

JOINTS (QW-402)

Groove Design of Test Coupon
(For combination qualifications, the deposited weld metal thickness shall be recorded for each filler metal and process used.)

BASE METALS (QW-403)
Material Spec. _____
Type or Grade, or UNS Number _____
P-No. _____ Group No. _____ to P-No. _____ Group No. _____
Thickness of Test Coupon _____
Diameter of Test Coupon _____
Maximum Pass Thickness _____
Other _____

POSTWELD HEAT TREATMENT (QW-407)
Temperature _____
Time _____
Other _____

GAS (QW-408)

	Gas(es)	Percent Composition (Mixture)	Flow Rate
Shielding			
Trailing			
Backing			
Other			

FILLER METALS (QW-404)

	1	2
SFA Specification		
AWS Classification		
Filler Metal F-No.		
Weld Metal Analysis A-No.		
Size of Filler Metal		
Filler Metal Product Form		
Supplemental Filler Metal		
Electrode Flux Classification		
Flux Type		
Flux Trade Name		
Weld Metal Thickness		
Other		

ELECTRICAL CHARACTERISTICS (QW-409)
Current _____
Polarity _____
Amps. _____ Volts _____
Waveform Control _____
Power or Energy _____
Arc Time _____
Weld Bead Length _____
Tungsten Electrode Size _____
Mode of Metal Transfer for GMAW (FCAW) _____
Heat Input _____
Other _____

POSITION (QW-405)
Position(s) _____
Weld Progression (Uphill, Downhill) _____
Other _____

TECHNIQUE (QW-410)
Travel Speed _____
String or Weave Bead _____
Oscillation _____
Multipass or Single Pass (Per Side) _____
Single or Multiple Electrodes _____
Other _____

PREHEAT (QW-406)
Preheat Temperature _____
Interpass Temperature _____
Other _____

(07/17)

Copyrighted material licensed to Fermi National Laboratory by Clarivate Analytics (US) LLC, subscriptions.techstreet.com, downloaded on 2020-09-23 17:45:20 +0000 by Fermi National Laboratory User.
No further reproduction or distribution is permitted.

FORM QW-483 (Back)

PQR No. _____

Tensile Test (QW-150)

Specimen No.	Width	Thickness	Area	Ultimate Total Load	Ultimate Unit Stress, (psi or MPa)	Type of Failure and Location

Alternative Tension Specimen Specification (QW-462) _____

Guided-Bend Tests (QW-160)

Type and Figure No.	Result

Toughness Tests (QW-170)

Specimen No.	Notch Location	Specimen Size	Test Temperature	Toughness Values			Drop Weight Break (Y/N)
				ft-lb or J	% Shear	Mils (in.) or mm	

Comments _____

Fillet-Weld Test (QW-180)

Result — Satisfactory: Yes _____ No _____ Penetration into Parent Metal: Yes _____ No _____

Macro — Results _____

Other Tests

Type of Test _____

Deposit Analysis _____

Other _____

. . . . . .

Welder's Name _____ Clock No. _____ Stamp No. _____

Tests Conducted by _____ Laboratory Test No. _____

We certify that the statements in this record are correct and that the test welds were prepared, welded, and tested in accordance with the requirements of Section IX of the ASME Boiler and Pressure Vessel Code.

Organization _____

Date _____ Certified by _____

(Detail of record of tests are illustrative only and may be modified to conform to the type and number of tests required by the Code.)

(07/19)

Copyrighted material licensed to Fermi National Laboratory by Clarivate Analytics (US) LLC, subscriptions.techstreet.com, downloaded on 2020-09-23 17:45:20 +0000 by Fermi National Laboratory User.
No further reproduction or distribution is permitted.

FORM QW-484A SUGGESTED FORMAT A FOR WELDER PERFORMANCE QUALIFICATIONS (WPQ)
(See QW-301, Section IX, ASME Boiler and Pressure Vessel Code)

Welder's name _____ Identification no. _____

Test Description

Identification of WPS followed _____ ☐ Test coupon ☐ Production weld Date welded _____

Specification and type/grade or UNS Number of base metal(s) _____ Thickness _____

Testing Variables and Qualification Limits

Welding Variables (QW-350)	Actual Values	Range Qualified
Welding process(es)		
Type (i.e.; manual, semi-automatic) used		
Backing (with/without)		
☐ Plate ☐ Pipe (enter diameter if pipe or tube)		
Base metal P-Number to P-Number		
Filler metal or electrode specification(s) (SFA) (info. only)		
Filler metal or electrode classification(s) (info. only)		
FIller metal F-Number(s)		
Consumable insert (GTAW or PAW)		
Filler Metal Product Form (QW-404.23) (GTAW or PAW)		
Deposit thickness for each process		
Process 1 _____ 3 layers minimum ☐ Yes ☐ No		
Process 2 _____ 3 layers minimum ☐ Yes ☐ No		
Position(s)		
Vertical progression (uphill or downhill)		
Type of fuel gas (OFW)		
Use of backing gas (GTAW, PAW, GMAW)		
Transfer mode (spray, globular, or pulse to short circuit-GMAW)		
GTAW current type and polarity (AC, DCEP, DCEN)		

RESULTS

Visual examination of completed weld (QW-302.4) _____

☐ Transverse face and root bends [QW-462.3(a)] ☐ Longitudinal bends [QW-462.3(b)] ☐ Side bends (QW-462.2)

☐ Pipe bend specimen, corrosion-resistant weld metal overlay [QW-462.5(c)]

☐ Plate bend specimen, corrosion-resistant weld metal overlay [QW-462.5(d)]

☐ Pipe specimen, macro test for fusion [QW-462.5(b)] ☐ Plate specimen, macro test for fusion [QW-462.5(e)]

Type	Result	Type	Result	Type	Result

Alternative Volumetric Examination Results (QW-191): _____ RT ☐ or UT ☐ (check one)

Fillet weld — fracture test (QW-181.2) _____ Length and percent of defects _____

☐ Fillet welds in plate [QW-462.4(b)] ☐ Fillet welds in pipe [QW-462.4(c)]

Macro examination (QW-184) _____ Fillet size (in.) _____ × _____ Concavity or convexity (in.) _____

Other tests _____

Film or specimens evaluated by _____ Company _____

Mechanical tests conducted by _____ Laboratory test no. _____

Welding supervised by _____

We certify that the statements in this record are correct and that the test coupons were prepared, welded, and tested in accordance with the requirements of Section IX of the ASME BOILER AND PRESSURE VESSEL CODE.

Organization _____

Date _____ Certified by _____

(07/17)

Copyrighted material licensed to Fermi National Laboratory by Clarivate Analytics (US) LLC, subscriptions.techstreet.com, downloaded on 2020-09-23 17:45:20 +0000 by Fermi National Laboratory User.
No further reproduction or distribution is permitted.

FORM QW-484B SUGGESTED FORMAT B FOR WELDING OPERATOR PERFORMANCE QUALIFICATIONS (WOPQ)
(See QW-301, Section IX, ASME Boiler and Pressure Vessel Code)

Welding operator's name _____ Identification no. _____

Test Description (*Information Only*)

Identification of WPS followed _____ ☐ Test coupon ☐ Production weld Date welded _____

Specification and type/grade or UNS Number of base metal(s) _____ Thickness _____

Base metal P-Number _____ to P-Number _____ Position(s) _____

☐ Plate ☐ Pipe (enter diameter, if pipe or tube) _____

Filler metal (SFA) specification _____ Filler metal or electrode classification _____

Testing Variables and Qualification Limits When Using Automatic Welding Equipment

Welding Variables (QW-361.1)	Actual Values	Range Qualified
Type of welding (automatic)		
Welding process		
FIller metal used (Yes or No) (EBW or LBW)		
Type of laser for LBW (CO_2 to YAG, etc.)		
Continuous drive or inertia welding (FW)		
Vacuum or out of vacuum (EBW)		

Testing Variables and Qualification Limits When Using Machine Welding Equipment

Welding Variables (QW-361.2)	Actual Values	Range Qualified
Type of welding (Machine)		
Welding process		
Direct or remote visual control		
Automatic arc voltage control (GTAW)		
Automatic joint tracking		
Position(s)		
Consumable inserts (GTAW or PAW)		
Backing (with or without)		
Single or multiple passes per side		

RESULTS

Visual examination of completed weld (QW-302.4) _____

☐ Transverse face and root bends [QW-462.3(a)] ☐ Longitudinal bends [QW-462.3(b)] ☐ Side bends (QW-462.2)

☐ Pipe bend specimen, corrosion-resistant weld metal overlay [QW-462.5(c)]

☐ Plate bend specimen, corrosion-resistant weld metal overlay [QW-462.5(d)]

☐ Pipe specimen, macro test for fusion [QW-462.5(b)] ☐ Plate specimen, macro test for fusion [QW-462.5(e)]

Type	Result	Type	Result	Type	Result

Alternative Volumetric Examination Results (QW-191): _____ RT ☐ or UT ☐ (check one)

Fillet weld — fracture test (QW-181.2) _____ Length and percent of defects _____

☐ Fillet welds in plate [QW-462.4(b)] ☐ Fillet welds in pipe [QW-462.4(c)]

Macro examination (QW-184) _____ Fillet size (in.) _____ × _____ Concavity or convexity (in.) _____

Other tests _____

Film or specimens evaluated by _____ Company _____

Mechanical tests conducted by _____ Laboratory test no. _____

Welding supervised by _____

We certify that the statements in this record are correct and that the test coupons were prepared, welded, and tested in accordance with the requirements of Section IX of the ASME Boiler and Pressure Vessel Code.

Organization _____

Date _____ Certified by _____

(07/17)

Copyrighted material licensed to Fermi National Laboratory by Clarivate Analytics (US) LLC, subscriptions.techstreet.com, downloaded on 2020-09-23 17:45:20 +0000 by Fermi National Laboratory User.
No further reproduction or distribution is permitted.

FORM QW-485 SUGGESTED FORMAT FOR DEMONSTRATION OF STANDARD WELDING PROCEDURE SPECIFICATIONS (SWPS)
(See Article V)

Identification of Standard Welding Procedure Specification Demonstrated _____

Date of Demonstration _____

Demonstration Welding Variables

Specification and type or grade or UNS Number of Base Metal(s) _____
to Specification and type or grade or UNS Number of Base Metal(s) _____
Base Metal P-Number _____ to Base Metal P-Number _____ Thickness _____

Welding Process(es) used _____
☐ Plate ☐ Pipe (Enter Diameter of Pipe or Tube) _____
Groove Design (Single V, Double V, Single U, etc.) _____
Initial Cleaning Method _____
Backing (with or without) _____
Filler Metal Specification _____
Filler Metal or Electrode Classification _____
Filler Metal or Electrode Trade Name _____
Size of Consumable Electrode or Filler Metal _____
Tungsten Electrode Classification and Size for GTAW _____
Consumable Insert Class and Size for GTAW _____
Shielding Gas Composition and Flow Rate for GTAW or GMAW (FCAW) _____
Preheat Temperature _____
Position(s) _____
Progression (Uphill or Downhill) _____
Interpass Cleaning Method _____
Measured Maximum Interpass Temperature _____
Approximate Deposit Thickness for Each Process or Electrode Type _____
Current Type and Polarity (AC, DCEP, DCEN) _____
Postweld Heat Treatment Time and Temperature _____

Visual Examination of Completed Weld (QW-302.4) _____ Date of Test _____

Bend Test (QW-302.1) ☐ Transverse Face and Root [QW-462.3(a)] ☐ Side (QW-462.2)

Type	Result	Type	Result	Type	Result

Alternative Radiographic Examination Results (QW-302.2) _____
Specimens Evaluated By _____ Title _____ Company _____
Welding Supervised By _____ Title _____ Company _____
Welder's Name _____ Stamp No. _____
We certify that the statements in this record are correct and that the weld described above was prepared, welded, and tested in accordance with the requirements of Section IX of the ASME BOILER AND PRESSURE VESSEL CODE.

Organization _____

Signature _____ Date _____ Demonstration Number _____

(07/17)

Copyrighted material licensed to Fermi National Laboratory by Clarivate Analytics (US) LLC, subscriptions.techstreet.com, downloaded on 2020-09-23 17:45:20 +0000 by Fermi National Laboratory User.
No further reproduction or distribution is permitted.

FORM QB-482 SUGGESTED FORMAT FOR A BRAZING PROCEDURE SPECIFICATION (BPS)
(See QB-200.1, Section IX, ASME Boiler and Pressure Vessel Code)

(**19**)

Organization Name _____ By _____
BPS Number _____ Revision _____ Date Issued _____
Supporting PQRs _____
Brazing Process(es) _____ Type(s) _____
(Automatic, Manual, Machine, or Semi-Automatic)

Joint Design (QB-408)

Joint Design: Type _____ Joint Clearance _____
Overlap: Minimum _____ Maximum _____

Base Metal (QB-402)

P-Number _____
to P-Number _____
AWS BM-Number _____
to AWS BM-Number _____
Other _____
Base Metal Thickness
Minimum _____
Maximum _____

Postbraze Heat Treatment (QB-409)

Temperature Range _____
Time Range _____

Flow Position (QB-407)

Positions Permitted _____
Flow Direction _____

Brazing Filler Metal (QB-403)

Specification Number _____
AWS Classification _____
F-Number _____
Filler Metal Product Form _____

Brazing Temperature (QB-404)

Brazing Temperature Range _____

Brazing Flux, Fuel Gas, or Atmosphere (QB-406)

Flux (AWS Class, Composition, or Trade Name) _____
Fuel Gas _____
Furnace Temperature _____
Atmosphere Type _____
Other _____

Technique (QB-410) and Other Information

Initial Cleaning _____

Flux Application _____

Nature of Flame (Oxidizing, Neutral, Reducing) _____

Torch Tip Sizes _____

Postbraze Cleaning _____

Inspection _____

(07/19)

Copyrighted material licensed to Fermi National Laboratory by Clarivate Analytics (US) LLC, subscriptions.techstreet.com, downloaded on 2020-09-23 17:45:20 +0000 by Fermi National Laboratory User.
No further reproduction or distribution is permitted.

(19)

FORM QB-483 SUGGESTED FORMAT FOR A BRAZING PROCEDURE QUALIFICATION RECORD (PQR)
(See QB-200.2, Section IX, ASME Boiler and Pressure Vessel Code)
Record of Actual Variables Used to Braze Test Coupon

Organization Name _____

BPS Followed During Brazing of Test Coupon _____ PQR No. _____

Brazing Process(es) Used _____ Date Coupon Was Brazed _____

Base Metal (QB-402)

Base Metal Specification _____ to Base Metal Specification _____

P-Number _____ to P-Number _____

AWS BM-Number _____ to AWS BM-Number _____

Base Metal Thickness _____ to Base Metal Thickness _____

Plate or Pipe or Tube _____

Brazing Filler Metal (QB-403)

Filler Metal Specification: AWS Classification _____ F-No. _____ Filler Metal Product Form _____

Joint Design (QB-408)

Overlap _____ Joint Type _____ Joint Clearance _____

Brazing Temperature (QB-404)

Brazing Temperature Range _____

Brazing Flux, Fuel Gas, or Atmosphere (QB-406)

Flux (AWS Class., Compostion, Trade Name, or None) _____ Atmosphere Type _____

Fuel Gas _____ Furnace Temperature _____ Other _____

Flow Position (QB-407)

Position _____ Flow Direction _____

Postbraze Heat Treatment (QB-409)

Temperature _____ Time _____

Technique (QB-410)

Cleaning Prior to Brazing _____

Postbraze Cleaning _____

Nature of Flame (Oxidizing, Neutral, Reducing) _____

Other _____

Tensile Tests (QB-150)

Specimen	Width or Diameter	Thickness	Area	Ultimate Load	UTS (psi or MPa)	Failure Location

Bend Tests (QB-160)

Type	Results	Type	Results

Peel Tests (QB-170) or Section Tests (QB-180)

Type	Results	Type	Results

Other Tests _____

Brazer's or Brazing Operator's Name _____ ID No. _____

Brazing of Test Coupon Supervised by _____

Test Specimens Evaluated by _____ Company _____

Laboratory Test Number _____

We hereby certify that the statements in this record are correct and that the test coupons were prepared, brazed, and tested in accordance with the requirements of Section IX of the ASME BOILER AND PRESSURE VESSEL CODE.

Organization _____

Certified by _____ Date _____

(07/19)

Copyrighted material licensed to Fermi National Laboratory by Clarivate Analytics (US) LLC, subscriptions.techstreet.com, downloaded on 2020-09-23 17:45:20 +0000 by Fermi National Laboratory User.
No further reproduction or distribution is permitted.

Copyrighted material licensed to Fermi National Laboratory by Clarivate Analytics (US) LLC, subscriptions.techstreet.com, downloaded on 2020-09-23 17:45:20 +0000 by Fermi National Laboratory User.
No further reproduction or distribution is permitted.

(19)

FORM QB-484 SUGGESTED FORMAT FOR A BRAZER OR BRAZING OPERATOR PERFORMANCE QUALIFICATION (BPQ)
(See QB-301, Section IX, ASME Boiler and Pressure Vessel Code)

Brazer's or Brazing Operator's Name _____ Identification No. _____

Testing Variables and Ranges Qualified

Identification of BPS Followed During Brazing of Test Coupon _____ Date Coupon Was Brazed _____
Specification of First Test Coupon Base Metal _____
Specification of Second Test Coupon Base Metal _____

Brazing Variables (QB-350)	Actual Values	Range Qualified
Brazing Process(es)		
Type of Brazing (Manual, Semi-Automatic, Automatic, Machine)		
Torch Brazing: Manual or Mechanical		
Base Metal		
P-Number ____ to P-Number		
AWS BM-Number ____ to AWS BM-Number ____		
☐ Plate ☐ Pipe (enter diameter if pipe or tube)		
Thickness		
to Thickness		
Joint Type (Butt, Lap, Scarf, Socket, etc.)		
If Lap or Socket, Overlap Length		
Joint Clearance		
Filler Metals		
SFA Specification(s) (info. only)		
Classification(s) (info. only)		
F-Number		
Product Form		
Brazing Flow Positions		

Testing and Results

Visual Examination of Completed Joint (QB-141.6) _____ **Date of Test** _____

Mechanical Test ☐ Peel (QB-462.3) ☐ Section (QB-462.4) ☐ Tension (QB-462.1)
☐ Transverse Bends [QB-462.2(a)] ☐ Longitudinal Bends [QB-462.2(b)]

Position	Result	Position	Result	Position	Result

Mechanical Tests Conducted by _____ Company _____
Specimens Evaluated by _____ Company _____
Lab Test No. _____

We certify that the statements in this record are correct and that the test coupons were prepared, brazed, and tested in accordance with the requirements of Section IX of the ASME BOILER AND PRESSURE VESSEL CODE.

Organization _____

Certified by _____ Date _____

(07/19)

(19)

NONMANDATORY APPENDIX D
P-NUMBER LISTING

P-No.	Grp. No.	Spec. No.	Type, Grade, or UNS No.
Steel and Steel Alloys			
1	1	A/SA-36	...
1	1	A/SA-53	E, A
1	1	A/SA-53	E, B
1	1	A/SA-53	F
1	1	A/SA-53	S, A
1	1	A/SA-53	S, B
1	1	A/SA-106	A
1	1	A/SA-106	B
1	1	A108	1015
1	1	A108	1018
1	1	A108	1020
1	1	A/SA-134	...
1	1	A/SA-135	A
1	1	A/SA-135	B
1	1	A139	A
1	1	A139	B
1	1	A139	C
1	1	A139	D
1	1	A139	E
1	1	A/SA-178	A
1	1	A/SA-178	C
1	1	A/SA-179	...
1	1	A/SA-181	Cl. 60
1	1	A/SA-192	...
1	1	A/SA-210	A-1
1	1	A211	A570-30
1	1	A211	A570-33
1	1	A211	A570-40
1	1	A/SA-214	...
1	1	A/SA-216	WCA
1	1	A/SA-234	WPB
1	1	A/SA-266	1
1	1	A/SA-283	A
1	1	A/SA-283	B
1	1	A/SA-283	C
1	1	A/SA-283	D
1	1	A/SA-285	A
1	1	A/SA-285	B
1	1	A/SA-285	C
1	1	A/SA-333	1
1	1	A/SA-333	6
1	1	A/SA-334	1
1	1	A/SA-334	6
1	1	A/SA-350	LF1
1	1	A/SA-352	LCA
1	1	A/SA-352	LCB

P-No.	Grp. No.	Spec. No.	Type, Grade, or UNS No.
Steel and Steel Alloys **(Cont'd)**			
1	1	A/SA-369	FPA
1	1	A/SA-369	FPB
1	1	A/SA-372	A
1	1	A381	Y35
1	1	A381	Y42
1	1	A381	Y46
1	1	A381	Y48
1	1	A381	Y50
1	1	A/SA-414	A
1	1	A/SA-414	B
1	1	A/SA-414	C
1	1	A/SA-414	D
1	1	A/SA-414	E
1	1	A/SA-420	WPL6
1	1	A500	B
1	1	A500	C
1	1	A501	A
1	1	A/SA-513	1008
1	1	A/SA-513	1010
1	1	A/SA-513	1015
1	1	A513	1015CW
1	1	A/SA-515	60
1	1	A/SA-515	65
1	1	A/SA-516	55
1	1	A/SA-516	60
1	1	A/SA-516	65
1	1	A519	1018 HR
1	1	A519	1020 HR
1	1	A519	1022 HR
1	1	A519	1025 HR
1	1	A519	1026 HR
1	1	A/SA-524	I
1	1	A/SA-524	II
1	1	A/SA-556	A2
1	1	A/SA-556	B2
1	1	A/SA-557	A2
1	1	A/SA-557	B2
1	1	A/SA-562	...
1	1	A/SA-572	42
1	1	A/SA-572	50
1	1	A573	58
1	1	A573	65
1	1	A575	M1008
1	1	A575	M1010
1	1	A575	M1012

Copyrighted material licensed to Fermi National Laboratory by Clarivate Analytics (US) LLC, subscriptions.techstreet.com, downloaded on 2020-09-23 17:45:20 +0000 by Fermi National Laboratory User.
No further reproduction or distribution is permitted.

P-No.	Grp. No.	Spec. No.	Type, Grade, or UNS No.
Steel and Steel Alloys **(Cont'd)**			
1	1	A575	M1015
1	1	A575	M1017
1	1	A575	M1020
1	1	A575	M1023
1	1	A575	M1025
1	1	A576	G10080
1	1	A576	G10100
1	1	A576	G10120
1	1	A576	G10150
1	1	A576	G10160
1	1	A576	G10170
1	1	A576	G10180
1	1	A576	G10190
1	1	A576	G10200
1	1	A576	G10210
1	1	A576	G10220
1	1	A576	G10230
1	1	A576	G10250
1	1	A/SA-587	...
1	1	A/SA-618	III
1	1	A633	A
1	1	A633	C
1	1	A633	D
1	1	A/SA-656	3, 50
1	1	A/SA-656	7, 50
1	1	A/SA-660	WCA
1	1	A/SA-662	A
1	1	A/SA-662	B
1	1	A/SA-663	...
1	1	A/SA-668	Cl. B
1	1	A/SA-668	Cl. C
1	1	A/SA-671	CA55
1	1	A/SA-671	CB60
1	1	A/SA-671	CB65
1	1	A/SA-671	CC60
1	1	A/SA-671	CC65
1	1	A/SA-671	CE55
1	1	A/SA-671	CE60
1	1	A/SA-672	A45
1	1	A/SA-672	A50
1	1	A/SA-672	A55
1	1	A/SA-672	B55
1	1	A/SA-672	B60
1	1	A/SA-672	B65
1	1	A/SA-672	C55
1	1	A/SA-672	C60
1	1	A/SA-672	C65
1	1	A/SA-672	E55
1	1	A/SA-672	E60
1	1	A/SA-675	45
1	1	A/SA-675	50
1	1	A/SA-675	55
1	1	A/SA-675	60
1	1	A/SA-675	65

P-No.	Grp. No.	Spec. No.	Type, Grade, or UNS No.
Steel and Steel Alloys **(Cont'd)**			
1	1	A694	F42
1	1	A694	F46
1	1	A694	F48
1	1	A694	F50
1	1	A694	F52
1	1	A/SA-696	B
1	1	A707	L1, Cl. 1
1	1	A707	L1, Cl. 2
1	1	A707	L2, Cl. 1
1	1	A707	L2, Cl. 2
1	1	A707	L3, Cl. 1
1	1	A707	L3, Cl. 2
1	1	A/SA-727	...
1	1	A/SA-765	I
1	1	A/SA-836	...
1	1	A860	WPHY 42
1	1	A860	WPHY 46
1	1	A860	WPHY 52
1	1	A992	...
1	1	A/SA-1008	CS A
1	1	A/SA-1008	CS B
1	1	A/SA-1008	DS B
1	1	A/SA-1011	CS B
1	1	A/SA-1011	DS B
1	1	A/SA-1011	HSLAS 45 Cl. 1
1	1	A/SA-1011	HSLAS 45 Cl. 2
1	1	A/SA-1011	HSLAS 50 Cl. 1
1	1	A/SA-1011	HSLAS 50 Cl. 2
1	1	A/SA-1011	HSLAS 55 Cl. 2
1	1	A/SA-1011	SS 33
1	1	A/SA-1011	SS 36 2
1	1	A/SA-1011	SS 40
1	1	A/SA-1011	SS 45
1	1	A/SA-1011	SS 50
1	1	API 5L	A (all grades)
1	1	API 5L	A25 (all grades)
1	1	API 5L	A25P (all grades)
1	1	API 5L	B (all grades)
1	1	API 5L	X42 (all grades)
1	1	API 5L	X46 (all grades)
1	1	API 5L	X52 (all grades)
1	1	AS 1448	K3
1	1	AS 1448	K8
1	1	AS 1448	S1
1	1	AS 1448	S3
1	1	AS 4728	200 L0
1	1	AS 4728	240 L0
1	1	AS 4728	290 L0
1	1	CSA Z245.1	241
1	1	CSA Z245.1	290
1	1	CSA Z245.1	359
1	1	CSA Z245.11	207
1	1	CSA Z245.11	241
1	1	CSA Z245.11	290

Copyrighted material licensed to Fermi National Laboratory by Clarivate Analytics (US) LLC, subscriptions.techstreet.com, downloaded on 2020-09-23 17:45:20 +0000 by Fermi National Laboratory User.
No further reproduction or distribution is permitted.

P-No.	Grp. No.	Spec. No.	Type, Grade, or UNS No.
Steel and Steel Alloys **(Cont'd)**			
1	1	CSA Z245.11	317
1	1	CSA Z245.11	359
1	1	CSA Z245.12	248
1	1	CSA Z245.12	290
1	1	CSA Z245.12	317
1	1	CSA Z245.12	359
1	1	MSS SP-75	WPHY-42
1	1	MSS SP-75	WPHY-46
1	1	MSS SP-75	WPHY-52
1	1	SA/AS 1548	PT430
1	1	SA/AS 1548	PT460
1	1	SA/CSA G40.21	38W
1	1	SA/CSA G40.21	44W
1	1	SA/CSA G40.21	50W
1	1	SA/EN 10028-2	P235GH
1	1	SA/EN 10028-2	P265GH
1	1	SA/EN 10028-2	P295GH
1	1	SA/EN 10028-3	P275NH
1	1	SA/EN 10216-2	P235GH
1	1	SA/EN 10216-2	P265GH
1	1	SA/EN 10222-2	P280GH
1	1	SA/EN 10025-2	S235JR
1	1	SA/EN 10217-1	P235TR2
1	1	SA/GB 713	Q345R
1	1	SA/IS 2062	E250 A
1	1	SA/IS 2062	E250 B
1	1	SA/IS 2062	E250 C
1	2	A/SA-105	...
1	2	A/SA-106	C
1	2	A/SA-178	D
1	2	A/SA-181	Cl. 70
1	2	A/SA-210	C
1	2	A/SA-216	WCB
1	2	A/SA-216	WCC
1	2	A/SA-234	WPC
1	2	A/SA-266	2
1	2	A/SA-266	3
1	2	A/SA-266	4
1	2	A/SA-299	A
1	2	A/SA-350	LF2
1	2	A/SA-352	LCC
1	2	A356	1
1	2	A/SA-372	B
1	2	A381	Y52
1	2	A381	Y56
1	2	A381	Y60
1	2	A/SA-414	F
1	2	A/SA-414	G
1	2	A/SA-455	...
1	2	A/SA-487	16, Cl. A
1	2	A501	B
1	2	A/SA-508	1
1	2	A/SA-508	1A
1	2	A513	1020 CW

P-No.	Grp. No.	Spec. No.	Type, Grade, or UNS No.
Steel and Steel Alloys **(Cont'd)**			
1	2	A513	1025 CW
1	2	A/SA-515	70
1	2	A/SA-516	70
1	2	A519	1018 CW
1	2	A519	1020 CW
1	2	A519	1022 CW
1	2	A519	1025 CW
1	2	A519	1026 CW
1	2	A521	Cl. CE
1	2	A/SA-537	Cl. 1
1	2	A/SA-541	1
1	2	A/SA-541	1A
1	2	A/SA-556	C2
1	2	A/SA-557	C2
1	2	A/SA-572	55
1	2	A/SA-572	60
1	2	A573	70
1	2	A618	11
1	2	A633	C
1	2	A633	D
1	2	A/SA-656	3, 60
1	2	A/SA-656	7, 60
1	2	A/SA-660	WCB
1	2	A/SA-660	WCC
1	2	A/SA-662	C
1	2	A/SA-671	CB70
1	2	A/SA-671	CC70
1	2	A/SA-671	CD70
1	2	A/SA-671	CK75
1	2	A/SA-672	B70
1	2	A/SA-672	C70
1	2	A/SA-672	D70
1	2	A/SA-672	N75
1	2	A/SA-675	70
1	2	A/SA-691	CMS-75
1	2	A/SA-691	CMSH-70
1	2	A694	F56
1	2	A694	F60
1	2	A694	F65
1	2	A/SA-696	C
1	2	A707	L2, Cl. 3
1	2	A707	L3, Cl. 3
1	2	A/SA-737	B
1	2	A/SA-738	A
1	2	A/SA-765	II
1	2	A/SA-841	A, Cl. 1
1	2	A860	WPHY 60
1	2	A860	WPHY 65
1	2	A/SA-1011	HSLAS 55 Cl. 1
1	2	A/SA-1011	HSLAS 60 Cl. 1
1	2	A/SA-1011	HSLAS 60 Cl. 2
1	2	A/SA-1011	SS 55
1	2	A/SA-1011	SS 60
1	2	API 5L	X56 (all grades)

Copyrighted material licensed to Fermi National Laboratory by Clarivate Analytics (US) LLC, subscriptions.techstreet.com, downloaded on 2020-09-23 17:45:20 +0000 by Fermi National Laboratory User.
No further reproduction or distribution is permitted.

P-No.	Grp. No.	Spec. No.	Type, Grade, or UNS No.
Steel and Steel Alloys **(Cont'd)**			
1	2	API 5L	X60 (all grades)
1	2	API 5L	X65 (all grades)
1	2	AS 1448	K4
1	2	AS 1448	K5
1	2	AS 1448	K9
1	2	AS 1448	S4
1	2	AS 1448	S5
1	2	CSA Z245.1	386
1	2	CSA Z245.1	414
1	2	CSA Z245.1	448
1	2	CSA Z245.11	386
1	2	CSA Z245.11	414
1	2	CSA Z245.11	448
1	2	CSA Z245.12	386
1	2	CSA Z245.12	414
1	2	CSA Z245.12	448
1	2	MSS SP-75	WPHY-56
1	2	MSS SP-75	WPHY-60
1	2	MSS SP-75	WPHY-65
1	2	SA/AS 1548	PT490
1	2	SA/EN 10028-2	P355GH
1	2	SA/EN 10028-3	P355NH
1	2	SA/EN 10028-3	P355NL2
1	2	SA/EN 10222-2	P305GH
1	2	SA/GB 713	Q345R
1	2	SA/GB 713	Q370R
1	2	SA/JIS G3118	SGV480
1	3	A/SA-299	B
1	3	A/SA-333	10
1	3	A/SA-350	LF6, Cl. 2
1	3	A513	1026 CW
1	3	A/SA-537	Cl. 2
1	3	A/SA-537	Cl. 3
1	3	A/SA-572	65
1	3	A633	E
1	3	A/SA-656	3, 70
1	3	A/SA-656	7, 70
1	3	A/SA-671	CD80
1	3	A/SA-672	D80
1	3	A/SA-691	CMSH-80
1	3	A694	F70
1	3	A/SA-737	C
1	3	A/SA-738	B
1	3	A/SA-738	C
1	3	A/SA-765	IV
1	3	A/SA-812	65
1	3	A/SA-841	B, Cl. 2
1	3	A860	WPHY 70
1	3	API 5L	X70 (all grades)
1	3	AS 1448	K6
1	3	AS 1448	K10
1	3	AS 1448	S6
1	3	CSA Z245.1	483
1	3	CSA Z245.11	483

P-No.	Grp. No.	Spec. No.	Type, Grade, or UNS No.
Steel and Steel Alloys **(Cont'd)**			
1	3	CSA Z245.12	483
1	3	MSS SP-75	WPHY-70
1	4	A/SA-656	3, 80
1	4	A/SA-656	7, 80
1	4	A/SA-724	A
1	4	A/SA-724	B
1	4	A/SA-724	C
1	4	A/SA-812	80
1	4	API 5L	X80 (all grades)
1	4	CSA Z245.1	550
1	4	CSA Z245.1	620
1	4	CSA Z245.11	550
1	4	CSA Z245.11	620
1	4	CSA Z245.12	550
1	4	CSA Z245.12	620
3	1	A/SA-204	A
3	1	A/SA-209	T1
3	1	A/SA-209	T1a
3	1	A/SA-209	T1b
3	1	A/SA-213	T2
3	1	A/SA-217	WC1
3	1	A/SA-234	WP1
3	1	A/SA-250	T1
3	1	A/SA-250	T1a
3	1	A/SA-250	T1b
3	1	A/SA-250	T2
3	1	A/SA-335	P1
3	1	A/SA-335	P2
3	1	A/SA-335	P15
3	1	A/SA-352	LC1
3	1	A356	2
3	1	A/SA-369	FP1
3	1	A/SA-369	FP2
3	1	A/SA-387	2, Cl. 1
3	1	A/SA-426	CP1
3	1	A/SA-426	CP2
3	1	A/SA-426	CP15
3	1	A588	K11430
3	1	A588	K12043
3	1	A/SA-672	L65
3	1	A/SA-691	$^1/_2$CR
3	1	A/SA-691	CM-65
3	1	A1066	50
3	1	SA/EN 10216-2	16Mo3
3	2	A/SA-182	F1
3	2	A/SA-182	F2
3	2	A/SA-204	B
3	2	A/SA-204	C
3	2	A/SA-302	A
3	2	A/SA-336	F1
3	2	A/SA-387	2, Cl. 2
3	2	A/SA-672	H75
3	2	A/SA-672	L70
3	2	A/SA-672	L75

Copyrighted material licensed to Fermi National Laboratory by Clarivate Analytics (US) LLC, subscriptions.techstreet.com, downloaded on 2020-09-23 17:45:20 +0000 by Fermi National Laboratory User.
No further reproduction or distribution is permitted.

P-No.	Grp. No.	Spec. No.	Type, Grade, or UNS No.
Steel and Steel Alloys **(Cont'd)**			
3	2	A/SA-691	½CR, Cl. 2
3	2	A/SA-691	CM-70
3	2	A/SA-691	CM-75
3	2	A1066	60
3	3	A108	8620
3	3	A/SA-302	B
3	3	A/SA-302	C
3	3	A/SA-302	D
3	3	A/SA-487	2, Cl. A
3	3	A/SA-487	2, Cl. B
3	3	A/SA-487	4, Cl. A
3	3	A/SA-508	2, Cl. 1
3	3	A/SA-508	2, Cl. 2
3	3	A/SA-508	3, Cl. 1
3	3	A/SA-508	3, Cl. 2
3	3	A/SA-508	4N, Cl. 3
3	3	A/SA-533	A, Cl. 1
3	3	A/SA-533	A, Cl. 2
3	3	A/SA-533	B, Cl. 1
3	3	A/SA-533	B, Cl. 2
3	3	A/SA-533	C, Cl. 1
3	3	A/SA-533	C, Cl. 2
3	3	A/SA-533	D, Cl. 1
3	3	A/SA-533	D, Cl. 2
3	3	A/SA-533	E, Cl. 1
3	3	A/SA-533	E, Cl. 2
3	3	A/SA-541	2, Cl. 1
3	3	A/SA-541	2, Cl. 2
3	3	A/SA-541	3, Cl. 1
3	3	A/SA-541	3, Cl. 2
3	3	A/SA-543	B Cl. 3
3	3	A/SA-543	C Cl. 3
3	3	A/SA-672	H80
3	3	A/SA-672	J80
3	3	A/SA-672	J90
3	3	A/SA-841	F, Cl. 6
3	3	A/SA-841	F, Cl. 7
3	3	A1066	65
3	3	A1066	70
3	3	A1066	80
4	1	A/SA-182	F11, Cl. 1
4	1	A/SA-182	F11, Cl. 2
4	1	A/SA-182	F11, Cl. 3
4	1	A/SA-182	F12, Cl. 1
4	1	A/SA-182	F12, Cl. 2
4	1	A199	T11
4	1	A/SA-213	T11
4	1	A/SA-213	T12
4	1	A/SA-217	WC4
4	1	A/SA-217	WC5
4	1	A/SA-217	WC6
4	1	A/SA-234	WP11, Cl. 1
4	1	A/SA-234	WP12, Cl. 1
4	1	A/SA-234	WP11, Cl. 3

P-No.	Grp. No.	Spec. No.	Type, Grade, or UNS No.
Steel and Steel Alloys **(Cont'd)**			
4	1	A/SA-234	WP12, Cl. 2
4	1	A/SA-250	T11
4	1	A/SA-250	T12
4	1	A/SA-335	P11
4	1	A/SA-335	P12
4	1	A/SA-336	F11, Cl. 2
4	1	A/SA-336	F11, Cl. 3
4	1	A/SA-336	F11, Cl. 1
4	1	A/SA-336	F12
4	1	A356	6
4	1	A356	8
4	1	A356	9
4	1	A/SA-369	FP11
4	1	A/SA-369	FP12
4	1	A/SA-387	11, Cl. 1
4	1	A/SA-387	11, Cl. 2
4	1	A/SA-387	12, Cl. 1
4	1	A/SA-387	12, Cl. 2
4	1	A/SA-426	CP11
4	1	A/SA-426	CP12
4	1	A/SA-541	11, Cl. 4
4	1	A/SA-691	1CR
4	1	A/SA-691	1¼ CR
4	1	A/SA-739	B11
4	1	SA/EN 10028-2	13CrMo4-5
4	1	SA/EN 10028-2	13CrMoSi5-5+QT
4	1	SA/EN 10216-2	13CrMo4-5
4	1	SA/EN 10222-2	13CrMo4-5
4	1	SA/GB 713	15CrMoR
4	2	A/SA-333	4
4	2	A/SA-423	1
4	2	A/SA-423	2
5A	1	A/SA-182	F21
5A	1	A/SA-182	F22, Cl. 1
5A	1	A/SA-182	F22, Cl. 3
5A	1	A199	T21
5A	1	A199	T22
5A	1	A/SA-213	T21
5A	1	A/SA-213	T22
5A	1	A/SA-217	WC9
5A	1	A/SA-234	WP22, Cl. 1
5A	1	A/SA-234	WP22, Cl. 3
5A	1	A/SA-250	T22
5A	1	A/SA-335	P21
5A	1	A/SA-335	P22
5A	1	A/SA-336	F21, Cl. 3
5A	1	A/SA-336	F21, Cl. 1
5A	1	A/SA-336	F22, Cl. 3
5A	1	A/SA-336	F22, Cl. 1
5A	1	A356	10
5A	1	A/SA-369	FP21
5A	1	A/SA-369	FP22
5A	1	A/SA-387	21, Cl. 1
5A	1	A/SA-387	21, Cl. 2

Copyrighted material licensed to Fermi National Laboratory by Clarivate Analytics (US) LLC, subscriptions.techstreet.com, downloaded on 2020-09-23 17:45:20 +0000 by Fermi National Laboratory User.
No further reproduction or distribution is permitted.

P-No.	Grp. No.	Spec. No.	Type, Grade, or UNS No.
Steel and Steel Alloys **(Cont'd)**			
5A	1	A/SA-387	22, Cl. 1
5A	1	A/SA-387	22, Cl. 2
5A	1	A/SA-426	CP21
5A	1	A/SA-426	CP22
5A	1	A/SA-691	$2^1/_4$CR
5A	1	A/SA-691	3CR
5A	1	A/SA-739	B22
5A	1	SA/EN 10028-2	10CrMo9-10
5A	1	SA/EN 10216-2	10CrMo9-10
5A	1	SA/EN 10222-2	11CrMo9-10
5B	1	A/SA-182	F5
5B	1	A/SA-182	F5a
5B	1	A/SA-182	F9
5B	1	A199	T5
5B	1	A199	T9
5B	1	A/SA-213	T5
5B	1	A/SA-213	T5b
5B	1	A/SA-213	T5c
5B	1	A/SA-213	T9
5B	1	A/SA-217	C5
5B	1	A/SA-217	C12
5B	1	A/SA-234	WP5
5B	1	A/SA-234	WP9
5B	1	A/SA-234	WP5, Cl.3
5B	1	A/SA-234	WP9, Cl.3
5B	1	A/SA-335	P5
5B	1	A/SA-335	P5b
5B	1	A/SA-335	P5c
5B	1	A/SA-335	P9
5B	1	A/SA-336	F5
5B	1	A/SA-336	F5A
5B	1	A/SA-336	F9
5B	1	A/SA-369	FP5
5B	1	A/SA-369	FP9
5B	1	A/SA-387	5, Cl. 1
5B	1	A/SA-387	5, Cl. 2
5B	1	A/SA-387	9, Cl. 1
5B	1	A/SA-387	9, Cl. 2
5B	1	A/SA-426	CP5
5B	1	A/SA-426	CP5b
5B	1	A/SA-426	CP9
5B	1	A/SA-691	5CR
5C	1	A/SA-182	F3V
5C	1	A/SA-182	F3VCb
5C	1	A/SA-182	F22V
5C	1	A/SA-336	F3V
5C	1	A/SA-336	F3VCb
5C	1	A/SA-336	F22V
5C	1	A/SA-487	8 Cl. A
5C	1	A/SA-508	3V
5C	1	A/SA-508	3VCb
5C	1	A/SA-508	22, Cl. 3
5C	1	A/SA-541	3V
5C	1	A/SA-541	3VCb

P-No.	Grp. No.	Spec. No.	Type, Grade, or UNS No.
Steel and Steel Alloys **(Cont'd)**			
5C	1	A/SA-541	22V
5C	1	A/SA-541	22, Cl. 3
5C	1	A/SA-542	A, Cl. 4
5C	1	A/SA-542	A, Cl. 4a
5C	1	A/SA-542	B, Cl. 4
5C	1	A/SA-542	B, Cl. 4a
5C	1	A/SA-542	C, Cl. 4
5C	1	A/SA-542	C, Cl. 4a
5C	1	A/SA-542	D, Cl. 4a
5C	1	A/SA-542	E, Cl. 4a
5C	1	A/SA-832	21V
5C	1	A/SA-832	22V
5C	1	A/SA-832	23V
5C	3	A/SA-542	A, Cl. 3
5C	3	A/SA-542	B, Cl. 3
5C	3	A/SA-542	C, Cl. 3
5C	4	A/SA-487	8 Cl. B
5C	4	A/SA-487	8 Cl. C
5C	4	A/SA-541	22, Cl. 4
5C	4	A/SA-542	A, Cl. 1
5C	4	A/SA-542	B, Cl. 1
5C	4	A/SA-542	C, Cl. 1
5C	5	A/SA-541	22, Cl. 5
5C	5	A/SA-542	A, Cl. 2
5C	5	A/SA-542	B, Cl. 2
5C	5	A/SA-542	C, Cl. 2
6	1	A/SA-182	F6a, Cl. 1
6	1	A/SA-240	410
6	1	A/SA-268	TP410
6	1	A/SA-276	TP410
6	1	A/SA-479	403
6	1	A/SA-479	410
6	2	A/SA-182	F429
6	2	A/SA-240	429
6	2	A/SA-268	TP429
6	3	A/SA-182	F6a, Cl. 2
6	3	A/SA-182	F6b
6	3	A/SA-182	F6a, Cl. 3
6	3	A/SA-182	F6a, Cl. 4
6	3	A/SA-217	CA15
6	3	A/SA-336	F6
6	3	A/SA-426	CPCA15
6	3	A/SA-487	CA15 Cl. B
6	3	A/SA-487	CA15 Cl. C
6	3	A/SA-487	CA15 Cl. D
6	3	A/SA-487	CA15M Cl. A
6	4	A/SA-182	F6NM
6	4	A/SA-240	S41500
6	4	A/SA-268	S41500
6	4	A/SA-352	CA6NM
6	4	A/SA-479	414
6	4	A/SA-479	S41500
6	4	A/SA-487	CA6NM Cl. A
6	4	A/SA-487	CA6NM Cl. B

Copyrighted material licensed to Fermi National Laboratory by Clarivate Analytics (US) LLC, subscriptions.techstreet.com, downloaded on 2020-09-23 17:45:20 +0000 by Fermi National Laboratory User.
No further reproduction or distribution is permitted.

P-No.	Grp. No.	Spec. No.	Type, Grade, or UNS No.
Steel and Steel Alloys **(Cont'd)**			
6	4	A/SA-731	S41500
6	4	A/SA-815	S41500
7	1	A/SA-240	405
7	1	A/SA-240	409
7	1	A/SA-240	410S
7	1	A/SA-268	S40800
7	1	A/SA-268	TP405
7	1	A/SA-268	TP409
7	1	A/SA-479	405
7	1	A/SA-1010	40
7	1	A/SA-1010	50
7	1	SA/JIS G4303	SUS405
7	2	A/SA-182	F430
7	2	A/SA-240	S44400
7	2	A/SA-240	430
7	2	A/SA-240	439
7	2	A/SA-240	S43932
7	2	A/SA-240	S43940
7	2	A/SA-240	S44100
7	2	A/SA-268	18Cr–2Mo
7	2	A/SA-268	TP430Ti
7	2	A/SA-268	TP430
7	2	A/SA-268	TP439
7	2	A/SA-479	430
7	2	A/SA-479	439
7	2	A/SA-479	S44400
7	2	A/SA-731	18Cr–2Mo
7	2	A/SA-731	TP439
7	2	A/SA-803	TP439
8	1	A167	302B
8	1	A/SA-182	S30600
8	1	A/SA-182	F304
8	1	A/SA-182	F304H
8	1	A/SA-182	F304L
8	1	A/SA-182	F304LN
8	1	A/SA-182	F304N
8	1	A/SA-182	F316
8	1	A/SA-182	F316H
8	1	A/SA-182	F316L
8	1	A/SA-182	F316LN
8	1	A/SA-182	F316N
8	1	A/SA-182	F317
8	1	A/SA-182	F317L
8	1	A/SA-182	F321
8	1	A/SA-182	F321H
8	1	A/SA-182	F347
8	1	A/SA-182	F347H
8	1	A/SA-182	F348
8	1	A/SA-182	F348H
8	1	A/SA-213	S30432
8	1	A/SA-213	S38815
8	1	A/SA-213	TP304
8	1	A/SA-213	TP304H
8	1	A/SA-213	TP304L

P-No.	Grp. No.	Spec. No.	Type, Grade, or UNS No.
Steel and Steel Alloys **(Cont'd)**			
8	1	A/SA-213	TP304LN
8	1	A/SA-213	TP304N
8	1	A/SA-213	S32615
8	1	A/SA-213	TP316
8	1	A/SA-213	TP316H
8	1	A/SA-213	TP316Ti
8	1	A/SA-213	TP316L
8	1	A/SA-213	TP316LN
8	1	A/SA-213	TP316N
8	1	A/SA-213	TP321
8	1	A/SA-213	TP321H
8	1	A/SA-213	TP347
8	1	A/SA-213	TP347H
8	1	A/SA-213	TP347HFG
8	1	A/SA-213	TP347LN
8	1	A/SA-213	TP317
8	1	A/SA-213	TP317L
8	1	A/SA-213	TP348
8	1	A/SA-213	TP348H
8	1	A/SA-213	XM-15
8	1	A/SA-240	S30500
8	1	A/SA-240	S30600
8	1	A/SA-240	S30601
8	1	A/SA-240	S31753
8	1	A/SA-240	S32615
8	1	A/SA-240	S38815
8	1	A/SA-240	301
8	1	A/SA-240	302
8	1	A/SA-240	304
8	1	A/SA-240	304H
8	1	A/SA-240	304L
8	1	A/SA-240	304LN
8	1	A/SA-240	304N
8	1	A/SA-240	316
8	1	A/SA-240	316Cb
8	1	A/SA-240	316H
8	1	A/SA-240	316L
8	1	A/SA-240	316LN
8	1	A/SA-240	316N
8	1	A/SA-240	316Ti
8	1	A/SA-240	317
8	1	A/SA-240	317L
8	1	A/SA-240	321
8	1	A/SA-240	321H
8	1	A/SA-240	347
8	1	A/SA-240	347H
8	1	A/SA-240	348
8	1	A/SA-240	348H
8	1	A/SA-240	XM-15
8	1	A/SA-240	XM-21
8	1	A/SA-249	S38815
8	1	A/SA-249	TP304
8	1	A/SA-249	TP304H
8	1	A/SA-249	TP304L

Copyrighted material licensed to Fermi National Laboratory by Clarivate Analytics (US) LLC, subscriptions.techstreet.com, downloaded on 2020-09-23 17:45:20 +0000 by Fermi National Laboratory User.
No further reproduction or distribution is permitted.

P-No.	Grp. No.	Spec. No.	Type, Grade, or UNS No.
Steel and Steel Alloys **(Cont'd)**			
8	1	A/SA-249	TP304LN
8	1	A/SA-249	TP304N
8	1	A/SA-249	TP316
8	1	A/SA-249	TP316H
8	1	A/SA-249	TP316L
8	1	A/SA-249	TP316LN
8	1	A/SA-249	TP316N
8	1	A/SA-249	TP317
8	1	A/SA-249	TP317L
8	1	A/SA-249	TP321
8	1	A/SA-249	TP321H
8	1	A/SA-249	TP347
8	1	A/SA-249	TP347H
8	1	A/SA-249	TP348
8	1	A/SA-249	TP348H
8	1	A/SA-249	TPXM-15
8	1	A269	TP304
8	1	A269	TP304L
8	1	A269	TP316
8	1	A269	TP316L
8	1	A/SA-276	304
8	1	A/SA-276	304L
8	1	A/SA-276	316
8	1	A/SA-276	316L
8	1	A/SA-312	S30600
8	1	A/SA-312	S32615
8	1	A/SA-312	TP304
8	1	A/SA-312	TP304H
8	1	A/SA-312	TP304L
8	1	A/SA-312	TP304LN
8	1	A/SA-312	TP304N
8	1	A/SA-312	TP316
8	1	A/SA-312	TP316H
8	1	A312	S31635
8	1	A/SA-312	TP316L
8	1	A/SA-312	TP316LN
8	1	A/SA-312	TP316N
8	1	A/SA-312	TP317
8	1	A/SA-312	TP317L
8	1	A/SA-312	TP321
8	1	A/SA-312	TP321H
8	1	A/SA-312	TP347
8	1	A/SA-312	TP347H
8	1	A/SA-312	TP347LN
8	1	A/SA-312	TP348
8	1	A/SA-312	TP348H
8	1	A/SA-312	TPXM-15
8	1	A/SA-351	CF3
8	1	A/SA-351	CF3A
8	1	A/SA-351	CF3M
8	1	A/SA-351	CF8
8	1	A/SA-351	CF8A
8	1	A/SA-351	CF8C
8	1	A/SA-351	CF8M

P-No.	Grp. No.	Spec. No.	Type, Grade, or UNS No.
Steel and Steel Alloys **(Cont'd)**			
8	1	A/SA-351	CF10
8	1	A/SA-351	CF10M
8	1	A/SA-351	CG8M
8	1	A/SA-351	CF10MC
8	1	A/SA-358	304
8	1	A/SA-358	304H
8	1	A/SA-358	304L
8	1	A/SA-358	304LN
8	1	A/SA-358	304N
8	1	A/SA-358	316
8	1	A/SA-358	316H
8	1	A/SA-358	316L
8	1	A/SA-358	316LN
8	1	A/SA-358	316N
8	1	A/SA-358	321
8	1	A/SA-358	347
8	1	A/SA-358	348
8	1	A/SA-376	16-8-2H
8	1	A/SA-376	TP304
8	1	A/SA-376	TP304H
8	1	A/SA-376	TP304LN
8	1	A/SA-376	TP304N
8	1	A/SA-376	TP316
8	1	A/SA-376	TP316H
8	1	A/SA-376	TP316LN
8	1	A/SA-376	TP316N
8	1	A/SA-376	TP321
8	1	A/SA-376	TP321H
8	1	A/SA-376	TP347
8	1	A/SA-376	TP347H
8	1	A/SA-376	TP348
8	1	A/SA-376	16-8-2H
8	1	A/SA-403	S38815
8	1	A/SA-403	WP304
8	1	A/SA-403	WP304H
8	1	A/SA-403	WP304L
8	1	A/SA-403	WP304LN
8	1	A/SA-403	WP304N
8	1	A/SA-403	WP316
8	1	A/SA-403	WP316H
8	1	A/SA-403	WP316L
8	1	A/SA-403	WP316LN
8	1	A/SA-403	WP316N
8	1	A/SA-403	WP317
8	1	A/SA-403	WP317L
8	1	A/SA-403	WP321
8	1	A/SA-403	WP321H
8	1	A/SA-403	WP347
8	1	A/SA-403	WP347H
8	1	A/SA-403	WP348
8	1	A/SA-403	WP348H
8	1	A/SA-409	TP304
8	1	A/SA-409	TP304L
8	1	A/SA-409	TP316

Copyrighted material licensed to Fermi National Laboratory by Clarivate Analytics (US) LLC, subscriptions.techstreet.com, downloaded on 2020-09-23 17:45:20 +0000 by Fermi National Laboratory User.
No further reproduction or distribution is permitted.

P-No.	Grp. No.	Spec. No.	Type, Grade, or UNS No.
Steel and Steel Alloys **(Cont'd)**			
8	1	A/SA-409	TP316L
8	1	A/SA-409	TP317
8	1	A/SA-409	TP321
8	1	A/SA-409	TP347
8	1	A/SA-409	TP348
8	1	A/SA-451	CPF3
8	1	A/SA-451	CPF3A
8	1	A/SA-451	CPF3M
8	1	A/SA-451	CPF8
8	1	A/SA-451	CPF8A
8	1	A/SA-451	CPF8C
8	1	A/SA-451	CPF8M
8	1	A/SA-451	CPF10MC
8	1	A/SA-479	302
8	1	A/SA-479	304
8	1	A/SA-479	304H
8	1	A/SA-479	304L
8	1	A/SA-479	304LN
8	1	A/SA-479	304N
8	1	A/SA-479	316
8	1	A/SA-479	316Cb
8	1	A/SA-479	316H
8	1	A/SA-479	316L
8	1	A/SA-479	316LN
8	1	A/SA-479	316N
8	1	A/SA-479	316Ti
8	1	A/SA-479	321
8	1	A/SA-479	321H
8	1	A/SA-479	347
8	1	A/SA-479	347H
8	1	A/SA-479	348
8	1	A/SA-479	348H
8	1	A/SA-479	S30600
8	1	A/SA-479	S32615
8	1	A/SA-479	S38815
8	1	A/SA-666	302
8	1	A/SA-666	304
8	1	A/SA-666	304L
8	1	A/SA-666	304LN
8	1	A/SA-666	304N
8	1	A/SA-666	316
8	1	A/SA-666	316L
8	1	A/SA-666	316N
8	1	A/SA-688	TP304
8	1	A/SA-688	TP304L
8	1	A/SA-688	TP304LN
8	1	A/SA-688	TP304N
8	1	A/SA-688	TP316
8	1	A/SA-688	TP316L
8	1	A/SA-688	TP316LN
8	1	A/SA-688	TP316N
8	1	A/SA-813	TP304
8	1	A/SA-813	TP304H
8	1	A/SA-813	TP304L

P-No.	Grp. No.	Spec. No.	Type, Grade, or UNS No.
Steel and Steel Alloys **(Cont'd)**			
8	1	A/SA-813	TP304LN
8	1	A/SA-813	TP304N
8	1	A/SA-813	TP316
8	1	A/SA-813	TP316H
8	1	A/SA-813	TP316L
8	1	A/SA-813	TP316LN
8	1	A/SA-813	TP316N
8	1	A/SA-813	TP317
8	1	A/SA-813	TP317L
8	1	A/SA-813	TP321
8	1	A/SA-813	TP321H
8	1	A/SA-813	TP347
8	1	A/SA-813	TP347H
8	1	A/SA-813	TP348
8	1	A/SA-813	TP348H
8	1	A/SA-813	TPXM-15
8	1	A/SA-814	TP304
8	1	A/SA-814	TP304H
8	1	A/SA-814	TP304L
8	1	A/SA-814	TP304LN
8	1	A/SA-814	TP304N
8	1	A/SA-814	TP316
8	1	A/SA-814	TP316H
8	1	A/SA-814	TP316L
8	1	A/SA-814	TP316LN
8	1	A/SA-814	TP316N
8	1	A/SA-814	TP317
8	1	A/SA-814	TP317L
8	1	A/SA-814	TP321
8	1	A/SA-814	TP321H
8	1	A/SA-814	TP347
8	1	A/SA-814	TP347H
8	1	A/SA-814	TP348
8	1	A/SA-814	TP348H
8	1	A/SA-814	TPXM-15
8	1	A/SA-965	F304
8	1	A/SA-965	F304H
8	1	A/SA-965	F304L
8	1	A/SA-965	F304LN
8	1	A/SA-965	F304N
8	1	A/SA-965	F316
8	1	A/SA-965	F316H
8	1	A/SA-965	F316L
8	1	A/SA-965	F316LN
8	1	A/SA-965	F316N
8	1	A/SA-965	F321
8	1	A/SA-965	F321H
8	1	A/SA-965	F347
8	1	A/SA-965	F347H
8	1	A/SA-965	F348
8	1	A/SA-965	F348H
8	1	SA/EN 10028-7	X5CrNi18-10
8	1	SA/EN 10028-7	X5CrNiMo17-12-2
8	1	SA/EN 10028-7	X2CrNi18-9

Copyrighted material licensed to Fermi National Laboratory by Clarivate Analytics (US) LLC, subscriptions.techstreet.com, downloaded on 2020-09-23 17:45:20 +0000 by Fermi National Laboratory User.
No further reproduction or distribution is permitted.

P-No.	Grp. No.	Spec. No.	Type, Grade, or UNS No.
Steel and Steel Alloys **(Cont'd)**			
8	1	SA/EN 10028-7	X5CrNiN19-9
8	1	SA/EN 10028-7	X2CrNiN18-10
8	1	SA/EN 10028-7	X2CrNiMo17-12-2
8	1	SA/EN 10028-7	X2CrNiMoN17-11-2
8	1	SA/EN 10028-7	X2CrNiMoN17-13-3
8	1	SA/EN 10028-7	X6CrNiTi18-10
8	1	SA/EN 10088-2	X6CrNiMoTi17-12-2
8	1	SA/JIS G4303	SUS302
8	1	SA/JIS G4303	SUS304
8	1	SA/JIS G4303	SUS304L
8	1	SA/JIS G4303	SUS316
8	1	SA/JIS G4303	SUS316L
8	1	SA/JIS G4303	SUS321
8	1	SA/JIS G4303	SUS347
8	2	A167	308
8	2	A167	309
8	2	A167	310
8	2	A/SA-182	F10
8	2	A/SA-182	F45
8	2	A/SA-182	F310
8	2	A/SA-182	F310H
8	2	A/SA-182	F310MoLN
8	2	A/SA-213	S30815
8	2	A/SA-213	TP309Cb
8	2	A/SA-213	TP309H
8	2	A/SA-213	TP309S
8	2	A/SA-213	TP310Cb
8	2	A/SA-213	TP310S
8	2	A/SA-213	TP309HCb
8	2	A/SA-213	TP310H
8	2	A/SA-213	TP310MoLN
8	2	A/SA-213	TP310HCb
8	2	A/SA-240	S30815
8	2	A/SA-240	309Cb
8	2	A/SA-240	309H
8	2	A/SA-240	309HCb
8	2	A/SA-240	309S
8	2	A/SA-240	310Cb
8	2	A/SA-240	310HCb
8	2	A/SA-240	310MoLN
8	2	A/SA-240	310S
8	2	A/SA-249	S30815
8	2	A/SA-249	TP309Cb
8	2	A/SA-249	TP309H
8	2	A/SA-249	TP309HCb
8	2	A/SA-249	TP309S
8	2	A/SA-249	TP310Cb
8	2	A/SA-249	TP310H
8	2	A/SA-249	TP310S
8	2	A/SA-249	TP310MoLN
8	2	A/SA-276	314
8	2	A/SA-312	S30815
8	2	A/SA-312	TP309Cb
8	2	A/SA-312	TP309H

P-No.	Grp. No.	Spec. No.	Type, Grade, or UNS No.
Steel and Steel Alloys **(Cont'd)**			
8	2	A/SA-312	TP309HCb
8	2	A/SA-312	TP309S
8	2	A/SA-312	TP310Cb
8	2	A/SA-312	TP310H
8	2	A/SA-312	TP310HCb
8	2	A/SA-312	TP310S
8	2	A/SA-312	TP310MoLN
8	2	A/SA-351	CH8
8	2	A/SA-351	CH20
8	2	A/SA-351	CK20
8	2	A/SA-351	CE20N
8	2	A/SA-351	CH10
8	2	A/SA-351	HK30
8	2	A/SA-351	HK40
8	2	A/SA-358	309
8	2	A/SA-358	309Cb
8	2	A/SA-358	309S
8	2	A/SA-358	310Cb
8	2	A/SA-358	310S
8	2	A/SA-358	S30815
8	2	A/SA-403	WP309
8	2	A/SA-403	WP310S
8	2	A/SA-409	S30815
8	2	A/SA-409	TP309Cb
8	2	A/SA-409	TP309S
8	2	A/SA-409	TP310Cb
8	2	A/SA-409	TP310S
8	2	A/SA-451	CPH8
8	2	A/SA-451	CPH20
8	2	A/SA-451	CPK20
8	2	A/SA-451	CPE20N
8	2	SA-479	309Cb
8	2	A/SA-479	309S
8	2	SA/JIS G4303	SUS309S
8	2	A/SA-479	310Cb
8	2	A/SA-479	310S
8	2	SA/JIS G4303	SUS3105
8	2	A/SA-479	S30815
8	2	A/SA-813	S30815
8	2	A/SA-813	TP309Cb
8	2	A/SA-813	TP309S
8	2	A/SA-813	TP310Cb
8	2	A/SA-813	TP310S
8	2	A/SA-814	S30815
8	2	A/SA-814	TP309Cb
8	2	A/SA-814	TP309S
8	2	A/SA-814	TP310Cb
8	2	A/SA-814	TP310S
8	2	A/SA-965	F310
8	3	A/SA-182	FXM-11
8	3	A/SA-182	FXM-19
8	3	A/SA-213	TP201
8	3	A/SA-213	TP202
8	3	A/SA-213	XM-19

Copyrighted material licensed to Fermi National Laboratory by Clarivate Analytics (US) LLC, subscriptions.techstreet.com, downloaded on 2020-09-23 17:45:20 +0000 by Fermi National Laboratory User.
No further reproduction or distribution is permitted.

P-No.	Grp. No.	Spec. No.	Type, Grade, or UNS No.
Steel and Steel Alloys **(Cont'd)**			
8	3	A/SA-213	S31042
8	3	A/SA-240	S20100
8	3	A/SA-240	S21800
8	3	A/SA-240	S20153
8	3	A/SA-240	202
8	3	A/SA-240	S20400
8	3	A/SA-240	XM-17
8	3	A/SA-240	XM-18
8	3	A/SA-240	XM-19
8	3	A/SA-240	XM-29
8	3	A/SA-249	TP201
8	3	A/SA-249	TP202
8	3	A/SA-249	TPXM-19
8	3	A/SA-249	TPXM-29
8	3	A/SA-312	TPXM-11
8	3	A/SA-312	TPXM-19
8	3	A/SA-312	TPXM-29
8	3	A/SA-351	CG6MMN
8	3	A/SA-358	XM-19
8	3	A/SA-358	XM-29
8	3	A/SA-403	WPXM-19
8	3	A/SA-479	S21800
8	3	A/SA-479	XM-11
8	3	A/SA-479	XM-17
8	3	A/SA-479	XM-18
8	3	A/SA-479	XM-19
8	3	A/SA-479	XM-29
8	3	A/SA-666	201
8	3	A/SA-666	XM-11
8	3	A/SA-688	XM-29
8	3	A/SA-813	TPXM-11
8	3	A/SA-813	TPXM-19
8	3	A/SA-813	TPXM-29
8	3	A/SA-814	TPXM-11
8	3	A/SA-814	TPXM-19
8	3	A/SA-814	TPXM-29
8	3	A/SA-965	FXM-11
8	3	A/SA-965	FXM-19
8	4	A/SA-182	F44
8	4	A/SA-182	S32053
8	4	A/SA-182	S34565
8	4	A/SA-213	S31254
8	4	A/SA-213	S31725
8	4	A/SA-213	S31726
8	4	A/SA-213	S34565
8	4	A/SA-240	S31254
8	4	A/SA-240	S31725
8	4	A/SA-240	S31726
8	4	A/SA-240	S32053
8	4	A/SA-240	S32654
8	4	A/SA-240	S34565
8	4	A/SA-249	S31254
8	4	A/SA-249	S31725
8	4	A/SA-249	S31726

P-No.	Grp. No.	Spec. No.	Type, Grade, or UNS No.
Steel and Steel Alloys **(Cont'd)**			
8	4	A/SA-249	S32053
8	4	A/SA-249	S34565
8	4	A/SA-312	S31254
8	4	A/SA-312	S31725
8	4	A/SA-312	S31726
8	4	A/SA-312	S32053
8	4	A/SA-312	S34565
8	4	A/SA-351	J93254
8	4	A/SA-358	S31254
8	4	A/SA-358	S31725
8	4	A/SA-358	S31726
8	4	A/SA-358	S32053
8	4	A/SA-376	S31725
8	4	A/SA-376	S31726
8	4	A/SA-376	S34565
8	4	A/SA-403	S31254
8	4	A/SA-403	WPS31726
8	4	A/SA-403	S32053
8	4	A/SA-403	S34565
8	4	A/SA-409	S31254
8	4	A/SA-409	S31725
8	4	A/SA-409	S31726
8	4	A/SA-409	S32053
8	4	A/SA-409	S34565
8	4	A/SA-479	S31254
8	4	A/SA-479	S31725
8	4	A/SA-479	S31726
8	4	A/SA-479	S32053
8	4	A/SA-479	S34565
8	4	A/SA-813	S31254
8	4	A/SA-813	S32053
8	4	A/SA-814	S31254
8	4	A/SA-814	S32053
8	4	SA-965	F46
9A	1	A/SA-182	FR
9A	1	A/SA-203	A
9A	1	A/SA-203	B
9A	1	A/SA-234	WPR
9A	1	A/SA-333	7
9A	1	A/SA-333	9
9A	1	A/SA-334	7
9A	1	A/SA-334	9
9A	1	A/SA-350	LF5, Cl. 1
9A	1	A/SA-350	LF5, Cl. 2
9A	1	A/SA-350	LF9
9A	1	A/SA-352	LC2
9A	1	A/SA-420	WPL9
9A	1	A714	V
9A	1	A714	V, E
9B	1	A/SA-203	D
9B	1	A/SA-203	E
9B	1	A/SA-203	F
9B	1	A/SA-333	3
9B	1	A/SA-334	3

Copyrighted material licensed to Fermi National Laboratory by Clarivate Analytics (US) LLC, subscriptions.techstreet.com, downloaded on 2020-09-23 17:45:20 +0000 by Fermi National Laboratory User.
No further reproduction or distribution is permitted.

P-No.	Grp. No.	Spec. No.	Type, Grade, or UNS No.
Steel and Steel Alloys **(Cont'd)**			
9B	1	A/SA-350	LF3, Cl. 2
9B	1	A/SA-352	LC3
9B	1	A/SA-420	WPL3
9B	1	A/SA-765	III
9C	1	A/SA-352	LC4
10A	1	A/SA-225	C
10A	1	A/SA-225	D
10A	1	A/SA-487	1, Cl. A
10A	1	A/SA-487	1, Cl. B
10A	1	SA/NF A 36-215	P440NJ4
10B	1	A/SA-213	T17
10C	1	A/SA-612	...
10H	1	A/SA-182	F53
10H	1	A/SA-182	F50
10H	1	A/SA-182	F51
10H	1	A/SA-182	F54
10H	1	A/SA-182	F55
10H	1	A/SA-182	S32202
10H	1	A/SA-182	F60
10H	1	A/SA-240	S31200
10H	1	A/SA-240	S31260
10H	1	A/SA-240	S31803
10H	1	A/SA-240	S32003
10H	1	A/SA-240	S32101
10H	1	A/SA-240	S32202
10H	1	A/SA-240	S32205
10H	1	A/SA-240	S32304
10H	1	A/SA-240	S32550
10H	1	A/SA-240	S32750
10H	1	A/SA-240	S32760
10H	1	A/SA-240	S32906
10H	1	A/SA-240	S32950
10H	1	A/SA-240	S82012
10H	1	A/SA-240	S82031
10H	1	A/SA-240	S82441
10H	1	A/SA-240	329
10H	1	A/SA-276	S32205
10H	1	A/SA-351	CD3MWCuN
10H	1	A/SA-479	S31803
10H	1	A/SA-479	S32202
10H	1	A/SA-479	S32101
10H	1	A/SA-479	S32205
10H	1	A/SA-479	S32550
10H	1	A/SA-479	S32750
10H	1	A/SA-479	S32906
10H	1	A/SA-479	S82441
10H	1	A/SA-789	S31200
10H	1	A/SA-789	S31260
10H	1	A/SA-789	S31500
10H	1	A/SA-789	S31803
10H	1	A/SA-789	S32003
10H	1	A/SA-789	S32101
10H	1	A/SA-789	S32202
10H	1	A/SA-789	S32205

P-No.	Grp. No.	Spec. No.	Type, Grade, or UNS No.
Steel and Steel Alloys **(Cont'd)**			
10H	1	A/SA-789	S32304
10H	1	A/SA-789	S32550
10H	1	A/SA-789	S32750
10H	1	A/SA-789	S32760
10H	1	A/SA-789	S32900
10H	1	A/SA-789	S32906
10H	1	A/SA-789	S32950
10H	1	A/SA-789	S39274
10H	1	A/SA-789	S82441
10H	1	A/SA-790	S31200
10H	1	A/SA-790	S31260
10H	1	A/SA-790	S31500
10H	1	A/SA-790	S31803
10H	1	A/SA-790	S32003
10H	1	A/SA-790	S32101
10H	1	A/SA-790	S32202
10H	1	A/SA-790	S32205
10H	1	A/SA-790	S32304
10H	1	A/SA-790	S32550
10H	1	A/SA-790	S32750
10H	1	A/SA-790	S32760
10H	1	A/SA-790	S32900
10H	1	A/SA-790	S32906
10H	1	A/SA-790	S32950
10H	1	A/SA-790	S39274
10H	1	A/SA-790	S82441
10H	1	A/SA-815	S31803
10H	1	A/SA-815	S32202
10H	1	A/SA-815	S32101
10H	1	A/SA-815	S32205
10H	1	A815	S32750
10H	1	A/SA-815	S32760
10H	1	A890	J93380
10H	1	A890	J92205
10H	1	A928	S31803
10H	1	A928	S32003
10H	1	A928	S32205
10H	1	A928	S32304
10H	1	A928	S32750
10H	1	A928	S32760
10H	1	A/SA-995	J92205
10H	1	A/SA-995	J93345
10H	1	A/SA-995	J93372
10H	1	A/SA-995	J93380
10H	1	A/SA-995	J93404
10I	1	A/SA-182	FXM-27Cb
10I	1	A/SA-240	S44635
10I	1	A/SA-240	XM-27
10I	1	A/SA-240	XM-33
10I	1	A/SA-268	25-4-4
10I	1	A/SA-268	TP446-1
10I	1	A/SA-268	TP446-2
10I	1	A/SA-268	TPXM-27
10I	1	A/SA-268	TPXM-33

Copyrighted material licensed to Fermi National Laboratory by Clarivate Analytics (US) LLC, subscriptions.techstreet.com, downloaded on 2020-09-23 17:45:20 +0000 by Fermi National Laboratory User.
No further reproduction or distribution is permitted.

P-No.	Grp. No.	Spec. No.	Type, Grade, or UNS No.
Steel and Steel Alloys **(Cont'd)**			
10I	1	A/SA-336	FXM-27Cb
10I	1	A/SA-479	XM-27
10I	1	A/SA-731	TPXM-27
10I	1	A/SA-731	TPXM-33
10J	1	A/SA-240	S44700
10J	1	A/SA-268	S44700
10J	1	A/SA-268	S44735
10J	1	A/SA-479	S44700
10J	1	A/SA-731	S44700
10K	1	A/SA-240	S44660
10K	1	A/SA-240	S44800
10K	1	A/SA-268	S44660
10K	1	A/SA-268	S44800
10K	1	A/SA-479	S44800
10K	1	A/SA-731	S44660
10K	1	A/SA-731	S44800
10K	1	A/SA-803	S44660
11A	1	A/SA-333	8
11A	1	A/SA-334	8
11A	1	A/SA-353	...
11A	1	A/SA-420	WPL8
11A	1	A/SA-522	I
11A	1	A/SA-522	II
11A	1	A/SA-553	I
11A	1	A/SA-553	II
11A	1	A/SA-553	III
11A	1	SA/EN 10028-4	X8Ni9
11A	1	SA/EN 10028-4	X7Ni9
11A	2	A/SA-645	A
11A	3	A/SA-487	4, Cl. B
11A	3	A/SA-487	4, Cl. E
11A	4	A/SA-533	A, Cl. 3
11A	4	A/SA-533	B, Cl. 3
11A	4	A/SA-533	C, Cl. 3
11A	4	A/SA-533	D, Cl. 3
11A	4	A/SA-672	J100
11A	5	A/SA-352	LC2-1
11A	5	A/SA-508	4N, Cl. 1
11A	5	A/SA-508	5, Cl. 1
11A	5	A/SA-543	B Cl. 1
11A	5	A/SA-543	C Cl. 1
11B	1	A514	A
11B	1	A/SA-517	A
11B	1	A/SA-592	A
11B	2	A514	E
11B	2	A/SA-517	E
11B	2	A/SA-592	E
11B	3	A514	F
11B	3	A/SA-517	F
11B	3	A/SA-592	F
11B	4	A514	B
11B	4	A/SA-517	B
11B	8	A514	P
11B	8	A/SA-517	P

P-No.	Grp. No.	Spec. No.	Type, Grade, or UNS No.
Steel and Steel Alloys **(Cont'd)**			
11B	9	A514	Q
11B	10	A/SA-508	4N, Cl. 2
11B	10	A/SA-508	5, Cl. 2
11B	10	A/SA-543	B Cl. 2
11B	10	A/SA-543	C Cl. 2
11C	1	A/SA-859	A
15E	1	A/SA-182	F91
15E	1	A/SA-182	F92
15E	1	A/SA-213	T91
15E	1	A/SA-213	T92
15E	1	A/SA-217	C12A
15E	1	A/SA-234	WP91
15E	1	A/SA-234	WP92
15E	1	A/SA-335	P91
15E	1	A/SA-335	P92
15E	1	A/SA-336	F91
15E	1	A/SA-336	F92
15E	1	A356	12A
15E	1	A/SA-369	FP91
15E	1	A/SA-369	FP92
15E	1	A/SA-387	91, Cl. 2
15E	1	A/SA-691	91
15E	1	A/SA-1017	92
15E	1	A1091	C91
15E	1	SA/EN 10222-2	X10CrMoVNb9-1
15E	1	SA/EN 10216-2	X10CrMoVNb9-1
Aluminum and Aluminum-Base Alloys			
21	...	B/SB-209	A91060
21	...	B/SB-209	A91100
21	...	B/SB-209	A93003
21	...	B/SB-209	A95050
21	...	B/SB-210	A91060
21	...	B/SB-210	A93003
21	...	B/SB-221	A91060
21	...	B/SB-221	A91100
21	...	B/SB-221	A93003
21	...	B/SB-234	A91060
21	...	B/SB-234	A93003
21	...	B/SB-241	A91060
21	...	B/SB-241	A91100
21	...	B/SB-241	A93003
21	...	B/SB-247	A93003
21	...	B345	A91060
21	...	B345	A93003
21	...	B361	A83003
21	...	B361	A91060
21	...	B361	A91100
21	...	B361	A93003
21	...	B491	A93003
21	...	B547	A93003
21	...	B547	A83003
22	...	B/SB-209	A93004
22	...	B/SB-209	A95052
22	...	B/SB-209	A95154
22	...	B/SB-209	A95254
22	...	B/SB-209	A95454

Copyrighted material licensed to Fermi National Laboratory by Clarivate Analytics (US) LLC, subscriptions.techstreet.com, downloaded on 2020-09-23 17:45:20 +0000 by Fermi National Laboratory User.
No further reproduction or distribution is permitted.

P-No.	Grp. No.	Spec. No.	Type, Grade, or UNS No.
Aluminum and Aluminum-Base Alloys **(Cont'd)**			
22	...	B/SB-209	A95652
22	...	B/SB-210	A95052
22	...	B/SB-210	A95154
22	...	B/SB-221	A95154
22	...	B/SB-221	A95454
22	...	B/SB-234	A95052
22	...	B/SB-234	A95454
22	...	B/SB-241	A95052
22	...	B/SB-241	A95454
22	...	B361	A95154
22	...	B547	A95454
23	...	B/SB-209	A96061
23	...	B/SB-210	A96061
23	...	B/SB-210	A96063
23	...	B/SB-211	A96061
23	...	B/SB-221	A96061
23	...	B/SB-221	A96063
23	...	B/SB-234	A96061
23	...	B/SB-241	A96061
23	...	B/SB-241	A96063
23	...	B/SB-247	A96061
23	...	B/SB-308	A96061
23	...	B345	A96061
23	...	B345	A96063
23	...	B361	A96061
23	...	B361	A96063
23	...	B547	A96061
25	...	B/SB-209	A95083
25	...	B/SB-209	A95086
25	...	B/SB-209	A95456
25	...	B210	A95083
25	...	B210	A95086
25	...	B210	A95456
25	...	B/SB-221	A95083
25	...	B/SB-221	A95456
25	...	B/SB-241	A95083
25	...	B/SB-241	A95086
25	...	B/SB-241	A95456
25	...	B/SB-247	A95083
25	...	B345	A95083
25	...	B345	A95086
25	...	B361	A95083
25	...	B547	A95083
25	...	B/SB-928	A95083
25	...	B/SB-928	A95086
25	...	B/SB-928	A95456
26	...	B/SB-26	A24430
26	...	B/SB-26	A03560
26	...	SB/EN 1706	EN AC 43000
Copper and Copper-Base Alloys			
31	...	B/SB-42	C10200
31	...	B/SB-42	C12000
31	...	B/SB-42	C12200
31	...	B68	C10200
31	...	B68	C12000

P-No.	Grp. No.	Spec. No.	Type, Grade, or UNS No.
Copper and Copper-Base Alloys **(Cont'd)**			
31	...	B68	C12200
31	...	B/SB-75	C10200
31	...	B/SB-75	C12000
31	...	B/SB-75	C12200
31	...	B/SB-75	C14200
31	...	B88	C10200
31	...	B88	C12000
31	...	B88	C12200
31	...	B/SB-111	C10200
31	...	B/SB-111	C12000
31	...	B/SB-111	C12200
31	...	B/SB-111	C14200
31	...	B/SB-111	C19200
31	...	B/SB-152	C10200
31	...	B/SB-152	C10400
31	...	B/SB-152	C10500
31	...	B/SB-152	C10700
31	...	B/SB-152	C11000
31	...	B/SB-152	C12200
31	...	B/SB-152	C12300
31	...	B/SB-152	C14200
31	...	B/SB-187	C10200
31	...	B/SB-187	C11000
31	...	B280	C10200
31	...	B280	C12000
31	...	B280	C12200
31	...	B/SB-283	C11000
31	...	B302	C12000
31	...	B/SB-359	C10200
31	...	B/SB-359	C12000
31	...	B/SB-359	C12200
31	...	B/SB-359	C14200
31	...	B/SB-359	C19200
31	...	B/SB-395	C10200
31	...	B/SB-395	C12000
31	...	B/SB-395	C12200
31	...	B/SB-395	C14200
31	...	B/SB-395	C19200
31	...	B/SB-543	C12200
31	...	B/SB-543	C19400
32	...	B/SB-43	C23000
32	...	B/SB-111	C23000
32	...	B/SB-111	C28000
32	...	B/SB-111	C44300
32	...	B/SB-111	C44400
32	...	B/SB-111	C44500
32	...	B/SB-111	C68700
32	...	B/SB-135	C23000
32	...	B/SB-171	C36500
32	...	B/SB-171	C44300
32	...	B/SB-171	C44400
32	...	B/SB-171	C44500
32	...	B/SB-171	C46400
32	...	B/SB-171	C46500

Copyrighted material licensed to Fermi National Laboratory by Clarivate Analytics (US) LLC, subscriptions.techstreet.com, downloaded on 2020-09-23 17:45:20 +0000 by Fermi National Laboratory User.
No further reproduction or distribution is permitted.

P-No.	Grp. No.	Spec. No.	Type, Grade, or UNS No.
Copper and Copper-Base Alloys **(Cont'd)**			
32	...	B/SB-283	C67500
32	...	B/SB-283	C46400
32	...	B/SB-359	C23000
32	...	B/SB-359	C44300
32	...	B/SB-359	C44400
32	...	B/SB-359	C44500
32	...	B/SB-359	C68700
32	...	B/SB-395	C23000
32	...	B/SB-395	C44300
32	...	B/SB-395	C44400
32	...	B/SB-395	C44500
32	...	B/SB-395	C68700
32	...	B/SB-543	C23000
32	...	B/SB-543	C44300
32	...	B/SB-543	C44400
32	...	B/SB-543	C44500
32	...	B/SB-543	C68700
33	...	B/SB-96	C65500
33	...	B/SB-98	C65100
33	...	B/SB-98	C65500
33	...	B/SB-98	C66100
33	...	B/SB-283	C65500
33	...	B/SB-315	C65500
34	...	B/SB-111	C70600
34	...	B/SB-111	C70620
34	...	B/SB-111	C71000
34	...	B/SB-111	C71500
34	...	B/SB-111	C71520
34	...	B/SB-111	C71640
34	...	B/SB-111	C72200
34	...	B/SB-151	C70600
34	...	B/SB-151	C70620
34	...	B/SB-171	C70600
34	...	B/SB-171	C70620
34	...	B/SB-171	C71500
34	...	B/SB-171	C71520
34	...	B/SB-283	C70620
34	...	B/SB-283	C71520
34	...	B/SB-359	C70400
34	...	B/SB-359	C70600
34	...	B/SB-359	C70620
34	...	B/SB-359	C71000
34	...	B/SB-359	C71500
34	...	B/SB-359	C71520
34	...	B/SB-369	C96200
34	...	B/SB-395	C70600
34	...	B/SB-395	C70620
34	...	B/SB-395	C71000
34	...	B/SB-395	C71500
34	...	B/SB-395	C71520
34	...	B/SB-466	C70600
34	...	B/SB-466	C70620
34	...	B/SB-466	C71000
34	...	B/SB-466	C71500

P-No.	Grp. No.	Spec. No.	Type, Grade, or UNS No.
Copper and Copper-Base Alloys **(Cont'd)**			
34	...	B/SB-466	C71520
34	...	B/SB-467	C70600
34	...	B/SB-467	C70620
34	...	B/SB-467	C71500
34	...	B/SB-467	C71520
34	...	B/SB-543	C70400
34	...	B/SB-543	C70600
34	...	B/SB-543	C70620
34	...	B/SB-543	C71500
34	...	B/SB-543	C71520
34	...	B/SB-543	C71640
34	...	B/SB-956	C70600
34	...	B/SB-956	C70620
34	...	B/SB-956	C71500
34	...	B/SB-956	C71520
35	...	B/SB-111	C60800
35	...	B/SB-148	C95200
35	...	B/SB-148	C95400
35	...	B/SB-148	C95300
35	...	B/SB-148	C95500
35	...	B/SB-148	C95600
35	...	B/SB-148	C95800
35	...	B/SB-148	C95820
35	...	B/SB-150	C61400
35	...	B/SB-150	C62300
35	...	B/SB-150	C63000
35	...	B/SB-150	C64200
35	...	B/SB-169	C61400
35	...	B/SB-171	C61400
35	...	B/SB-171	C63000
35	...	B/SB-271	C95200
35	...	B/SB-271	C95400
35	...	B/SB-359	C60800
35	...	B/SB-395	C60800
35	...	B/SB-505	C95200
Nickel and Nickel-Base Alloys			
41	...	B/SB-160	N02200
41	...	B/SB-160	N02201
41	...	B/SB-161	N02200
41	...	B/SB-161	N02201
41	...	B/SB-162	N02200
41	...	B/SB-162	N02201
41	...	B/SB-163	N02200
41	...	B/SB-163	N02201
41	...	B/SB-366	N02200
41	...	B/SB-366	N02201
41	...	B725	N02200
41	...	B725	N02201
41	...	B730	N02200
41	...	B730	N02201
42	...	B/SB-127	N04400
42	...	B/SB-163	N04400
42	...	B/SB-164	N04400
42	...	B/SB-164	N04405

Copyrighted material licensed to Fermi National Laboratory by Clarivate Analytics (US) LLC, subscriptions.techstreet.com, downloaded on 2020-09-23 17:45:20 +0000 by Fermi National Laboratory User.
No further reproduction or distribution is permitted.

P-No.	Grp. No.	Spec. No.	Type, Grade, or UNS No.
Nickel and Nickel-Base Alloys **(Cont'd)**			
42	...	B/SB-165	N04400
42	...	B/SB-366	N04400
42	...	A/SA-494	N04020
42	...	A/SA-494	N24130
42	...	A/SA-494	N24135
42	...	B/SB-564	N04400
42	...	B725	N04400
42	...	B730	N04400
43	...	B/SB-163	N06025
43	...	B/SB-163	N06600
43	...	B/SB-163	N06601
43	...	B/SB-163	N06690
43	...	B/SB-166	N06025
43	...	B/SB-166	N06600
43	...	B/SB-166	N06601
43	...	B/SB-166	N06617
43	...	B/SB-166	N06690
43	...	B/SB-167	N06025
43	...	B/SB-167	N06600
43	...	B/SB-167	N06601
43	...	B/SB-167	N06617
43	...	B/SB-167	N06690
43	...	B/SB-168	N06025
43	...	B/SB-168	N06600
43	...	B/SB-168	N06601
43	...	B/SB-168	N06617
43	...	B/SB-168	N06690
43	...	B/SB-366	N06002
43	...	B/SB-366	N06022
43	...	B/SB-366	N06025
43	...	B/SB-366	N06035
43	...	B/SB-366	N06059
43	...	B/SB-366	N06200
43	...	B/SB-366	N06210
43	...	B/SB-366	N06230
43	...	B/SB-366	N06455
43	...	B/SB-366	N06600
43	...	B/SB-366	N06625
43	...	B/SB-366	N10276
43	...	B/SB-366	N10362
43	...	B/SB-435	N06002
43	...	B/SB-435	N06230
43	...	B/SB-443	N06625
43	...	B/SB-444	N06625
43	...	B/SB-446	N06625
43	...	B/SB-462	N06022
43	...	B/SB-462	N06035
43	...	B/SB-462	N06059
43	...	B/SB-462	N06200
43	...	B/SB-462	N06686
43	...	B/SB-462	N06686
43	...	B/SB-462	N10276
43	...	B/SB-462	N10362
43	...	A/SA-494	N06040
43	...	A/SA-494	N26022

P-No.	Grp. No.	Spec. No.	Type, Grade, or UNS No.
Nickel and Nickel-Base Alloys **(Cont'd)**			
43	...	A/SA-494	N26455
43	...	A/SA-494	N26625
43	...	B/SB-516	N06025
43	...	B/SB-516	N06600
43	...	B/SB-517	N06025
43	...	B/SB-517	N06600
43	...	B/SB-564	N06022
43	...	B/SB-564	N06025
43	...	B/SB-564	N06035
43	...	B/SB-564	N06059
43	...	B/SB-564	N06200
43	...	B/SB-564	N06210
43	...	B/SB-564	N06230
43	...	B/SB-564	N06600
43	...	B/SB-564	N06617
43	...	B/SB-564	N06625
43	...	B/SB-564	N06686
43	...	B/SB-564	N06690
43	...	B/SB-564	N10276
43	...	B/SB-564	N10362
43	...	B/SB-572	N06002
43	...	B/SB-572	N06230
43	...	B/SB-574	N06022
43	...	B/SB-574	N06035
43	...	B/SB-574	N06059
43	...	B/SB-574	N06200
43	...	B/SB-574	N06210
43	...	B/SB-574	N06455
43	...	B/SB-574	N06686
43	...	B/SB-574	N10276
43	...	B/SB-574	N10362
43	...	B/SB-575	N06022
43	...	B/SB-575	N06035
43	...	B/SB-575	N06059
43	...	B/SB-575	N06200
43	...	B/SB-575	N06210
43	...	B/SB-575	N06455
43	...	B/SB-575	N06686
43	...	B/SB-575	N10276
43	...	B/SB-575	N10362
43	...	B/SB-619	N06002
43	...	B/SB-619	N06022
43	...	B/SB-619	N06035
43	...	B/SB-619	N06059
43	...	B/SB-619	N06200
43	...	B/SB-619	N06210
43	...	B/SB-619	N06230
43	...	B/SB-619	N06455
43	...	B/SB-619	N06686
43	...	B/SB-619	N10276
43	...	B/SB-619	N10362
43	...	B/SB-622	N06002
43	...	B/SB-622	N06022
43	...	B/SB-622	N06035

Copyrighted material licensed to Fermi National Laboratory by Clarivate Analytics (US) LLC, subscriptions.techstreet.com, downloaded on 2020-09-23 17:45:20 +0000 by Fermi National Laboratory User.
No further reproduction or distribution is permitted.

P-No.	Grp. No.	Spec. No.	Type, Grade, or UNS No.
Nickel and Nickel-Base Alloys **(Cont'd)**			
43	...	B/SB-622	N06059
43	...	B/SB-622	N06200
43	...	B/SB-622	N06210
43	...	B/SB-622	N06230
43	...	B/SB-622	N06455
43	...	B/SB-622	N06686
43	...	B/SB-622	N10276
43	...	B/SB-622	N10362
43	...	B/SB-626	N06002
43	...	B/SB-626	N06022
43	...	B/SB-626	N06035
43	...	B/SB-626	N06059
43	...	B/SB-626	N06200
43	...	B/SB-626	N06210
43	...	B/SB-626	N06230
43	...	B/SB-626	N06455
43	...	B/SB-626	N06686
43	...	B/SB-626	N10276
43	...	B/SB-626	N10362
43	...	B/SB-704	N06625
43	...	B/SB-705	N06625
44	...	B/SB-333	N10001
44	...	B/SB-333	N10629
44	...	B/SB-333	N10665
44	...	B/SB-333	N10675
44	...	B/SB-335	N10001
44	...	B/SB-335	N10629
44	...	B/SB-335	N10665
44	...	B/SB-335	N10675
44	...	B/SB-366	N10001
44	...	B/SB-366	N10003
44	...	B/SB-366	N10242
44	...	B/SB-366	N10629
44	...	B/SB-366	N10665
44	...	B/SB-366	N10675
44	...	B/SB-434	N10003
44	...	B/SB-434	N10242
44	...	B/SB-462	N10629
44	...	B/SB-462	N10665
44	...	B/SB-462	N10675
44	...	A/SA-494	N30007
44	...	A/SA-494	N30107
44	...	B/SB-564	N10242
44	...	B/SB-564	N10629
44	...	B/SB-564	N10665
44	...	B/SB-564	N10675
44	...	B/SB-573	N10003
44	...	B/SB-573	N10242
44	...	B/SB-619	N10001
44	...	B/SB-619	N10242
44	...	B/SB-619	N10629
44	...	B/SB-619	N10665
44	...	B/SB-619	N10675
44	...	B/SB-622	N10001

P-No.	Grp. No.	Spec. No.	Type, Grade, or UNS No.
Nickel and Nickel-Base Alloys **(Cont'd)**			
44	...	B/SB-622	N10242
44	...	B/SB-622	N10629
44	...	B/SB-622	N10665
44	...	B/SB-622	N10675
44	...	B/SB-626	N10001
44	...	B/SB-626	N10242
44	...	B/SB-626	N10629
44	...	B/SB-626	N10665
44	...	B/SB-626	N10675
45	...	A/SA-182	N08367
45	...	A/SA-182	S31266
45	...	A/SA-240	S31266
45	...	A/SA-240	S31277
45	...	A/SA-249	N08904
45	...	A403	N08367
45	...	A/SA-403	N08904
45	...	A/SA-479	N08367
45	...	B/SB-163	N08120
45	...	B/SB-163	N08800
45	...	B/SB-163	N08801
45	...	B/SB-163	N08810
45	...	B/SB-163	N08811
45	...	B/SB-163	N08825
45	...	A/SA-351	CN3MN
45	...	A/SA-351	N08007
45	...	A/SA-351	N08151
45	...	A/SA-351	N08603
45	...	A/SA-358	S31266
45	...	B/SB-366	N06007
45	...	B/SB-366	N06030
45	...	B/SB-366	N06985
45	...	B/SB-366	N08020
45	...	B/SB-366	N08031
45	...	B/SB-366	N08120
45	...	B/SB-366	N08367
45	...	B/SB-366	N08800
45	...	B/SB-366	N08825
45	...	B/SB-366	N08925
45	...	B/SB-366	R20033
45	...	B/SB-366	R30556
45	...	B/SB-366	N08926
45	...	B/SB-407	N08120
45	...	B/SB-407	N08800
45	...	B/SB-407	N08801
45	...	B/SB-407	N08810
45	...	B/SB-407	N08811
45	...	B/SB-408	N08120
45	...	B/SB-408	N08800
45	...	B/SB-408	N08810
45	...	B/SB-408	N08811
45	...	B/SB-409	N08120
45	...	B/SB-409	N08800
45	...	B/SB-409	N08810
45	...	B/SB-409	N08811

Copyrighted material licensed to Fermi National Laboratory by Clarivate Analytics (US) LLC, subscriptions.techstreet.com, downloaded on 2020-09-23 17:45:20 +0000 by Fermi National Laboratory User.
No further reproduction or distribution is permitted.

P-No.	Grp. No.	Spec. No.	Type, Grade, or UNS No.
Nickel and Nickel-Base Alloys **(Cont'd)**			
45	...	B/SB-423	N08825
45	...	B/SB-424	N08825
45	...	B/SB-425	N08825
45	...	B/SB-435	R30556
45	...	B/SB-462	N06030
45	...	B/SB-462	N08020
45	...	B/SB-462	N08031
45	...	A/SA-182	N08904
45	...	A/SA-240	N08367
45	...	A/SA-240	N08904
45	...	A/SA-249	N08367
45	...	A/SA-312	N08367
45	...	A/SA-312	N08904
45	...	A/SA-358	N08367
45	...	A479	N08904
45	...	A/SA-813	N08367
45	...	A/SA-814	N08367
45	...	B/SB-462	N08367
45	...	B/SB-462	R20033
45	...	B/SB-463	N08020
45	...	B/SB-463	N08024
45	...	B/SB-463	N08026
45	...	B/SB-464	N08020
45	...	B/SB-464	N08024
45	...	B/SB-464	N08026
45	...	B/SB-468	N08020
45	...	B/SB-468	N08024
45	...	B/SB-468	N08026
45	...	B/SB-473	N08020
45	...	A/SA-494	N08826
45	...	B/SB-514	N08120
45	...	B/SB-514	N08800
45	...	B/SB-514	N08810
45	...	B/SB-515	N08120
45	...	B/SB-515	N08800
45	...	B/SB-515	N08810
45	...	B/SB-515	N08811
45	...	B/SB-564	N08031
45	...	B/SB-564	N08120
45	...	B/SB-564	N08367
45	...	B/SB-564	N08800
45	...	B/SB-564	N08810
45	...	B/SB-564	N08811
45	...	B/SB-564	N08825
45	...	B/SB-564	R20033
45	...	B/SB-572	R30556
45	...	B/SB-581	N06007
45	...	B/SB-581	N06030
45	...	B/SB-581	N06975
45	...	B/SB-581	N06985
45	...	B/SB-581	N08031
45	...	B/SB-582	N06007
45	...	B/SB-582	N06030
45	...	B/SB-582	N06975
45	...	B/SB-582	N06985
45	...	B/SB-599	N08700
45	...	B/SB-619	N06007
45	...	B/SB-619	N06030
45	...	B/SB-619	N06975
45	...	B/SB-619	N06985
45	...	B/SB-619	N08031
45	...	B/SB-619	N08320
45	...	B/SB-619	R20033
45	...	B/SB-619	R30556
45	...	B/SB-620	N08320
45	...	B/SB-621	N08320
45	...	B/SB-622	N06007
45	...	B/SB-622	N06030
45	...	B/SB-622	N06975
45	...	B/SB-622	N06985
45	...	B/SB-622	N08031
45	...	B/SB-622	N08320
45	...	B/SB-622	R20033
45	...	B/SB-622	R30556
45	...	B/SB-625	N08031
45	...	B/SB-625	N08904
45	...	B/SB-625	N08925
45	...	B/SB-625	R20033
45	...	B/SB-625	N08926
45	...	B/SB-626	N06007
45	...	B/SB-626	N06030
45	...	B/SB-626	N06975
45	...	B/SB-626	N06985
45	...	B/SB-626	N08031
45	...	B/SB-626	N08320
45	...	B/SB-626	R20033
45	...	B/SB-626	R30556
45	...	B/SB-649	N08904
45	...	B/SB-649	N08925
45	...	B/SB-649	R20033
45	...	B/SB-649	N08926
45	...	B/SB-668	N08028
45	...	B/SB-672	N08700
45	...	B/SB-673	N08904
45	...	B/SB-673	N08925
45	...	B/SB-673	N08926
45	...	B/SB-674	N08904
45	...	B/SB-674	N08925
45	...	B/SB-674	N08926
45	...	B/SB-675	N08367
45	...	B/SB-676	N08367
45	...	B/SB-677	N08904
45	...	B/SB-677	N08925
45	...	B/SB-677	N08926
45	...	B/SB-688	N08367
45	...	B/SB-690	N08367
45	...	B/SB-691	N08367
45	...	B/SB-704	N08825

Copyrighted material licensed to Fermi National Laboratory by Clarivate Analytics (US) LLC, subscriptions.techstreet.com, downloaded on 2020-09-23 17:45:20 +0000 by Fermi National Laboratory User.
No further reproduction or distribution is permitted.

P-No.	Grp. No.	Spec. No.	Type, Grade, or UNS No.
Nickel and Nickel-Base Alloys **(Cont'd)**			
45	...	B/SB-705	N08825
45	...	B/SB-709	N08028
45	...	B/SB-729	N08020
46	...	B/SB-166	N06045
46	...	B/SB-167	N06045
46	...	B/SB-168	N06045
46	...	B/SB-366	N06045
46	...	B/SB-366	N08330
46	...	B/SB-366	N12160
46	...	B/SB-435	N12160
46	...	B/SB-462	N06045
46	...	B/SB-511	N08330
46	...	B/SB-516	N06045
46	...	B/SB-517	N06045
46	...	B/SB-535	N08330
46	...	B/SB-536	N08330
46	...	B/SB-564	N06045
46	...	B/SB-564	N12160
46	...	B/SB-572	N12160
46	...	B/SB-619	N12160
46	...	B/SB-622	N12160
46	...	B/SB-626	N12160
46	...	B/SB-710	N08330
49	...	B/SB-815	R31233
49	...	B/SB-818	R31233
Titanium and -Base Alloys			
51	...	B/SB-265	R50250
51	...	B/SB-265	R50400
51	...	B/SB-265	R52250
51	...	B/SB-265	R52252
51	...	B/SB-265	R52254
51	...	B/SB-265	R52400
51	...	B/SB-265	R52402
51	...	B/SB-265	R52404
51	...	B/SB-338	R50250
51	...	B/SB-338	R50400
51	...	B/SB-338	R52400
51	...	B/SB-338	R52402
51	...	B/SB-338	R52404
51	...	B/SB-348	R50250
51	...	B/SB-348	R50400
51	...	B/SB-348	R50402
51	...	B/SB-348	R52400
51	...	B/SB-348	R52404
51	...	B/SB-363	R50250
51	...	B/SB-363	R50400
51	...	B/SB-363	R52400
51	...	B/SB-363	R52404
51	...	B/SB-367	R50400
51	...	B/SB-381	R50250
51	...	B/SB-381	R50400
51	...	B/SB-381	R50402
51	...	B/SB-381	R52400
51	...	B/SB-381	R52404
51	...	B/SB-861	R50250

P-No.	Grp. No.	Spec. No.	Type, Grade, or UNS No.
Titanium and -Base Alloys **(Cont'd)**			
51	...	B/SB-861	R50400
51	...	B/SB-861	R52400
51	...	B/SB-861	R52404
51	...	B/SB-862	R50250
51	...	B/SB-862	R50400
51	...	B/SB-862	R52400
51	...	B/SB-862	R52404
52	...	B/SB-265	R50550
52	...	B/SB-265	R53400
52	...	B/SB-338	R50550
52	...	B/SB-338	R53400
52	...	B/SB-348	R50550
52	...	B/SB-348	R53400
52	...	B/SB-363	R50550
52	...	B/SB-363	R53400
52	...	B/SB-367	R50550
52	...	B/SB-381	R50550
52	...	B/SB-381	R53400
52	...	B/SB-861	R50550
52	...	B/SB-861	R53400
52	...	B/SB-862	R50550
52	...	B/SB-862	R53400
53	...	B/SB-265	R56320
53	...	B/SB-338	R56320
53	...	B/SB-348	R56320
53	...	B/SB-363	R56320
53	...	B/SB-381	R56320
53	...	B/SB-861	R56320
53	...	B/SB-862	R56320
53	...	B/SB-265	R56323
53	...	B/SB-338	R56323
53	...	B/SB-348	R56323
53	...	B/SB-363	R56323
53	...	B/SB-381	R56323
53	...	B/SB-861	R56323
53	...	B/SB-862	R56323
54	...	B/SB-265	R54250
54	...	B/SB-338	R54250
54	...	B/SB-348	R54250
54	...	B/SB-363	R54250
54	...	B/SB-381	R54250
54	...	B/SB-861	R54250
54	...	B/SB-862	R54250
Zirconium and Zirconium-Base Alloys			
61	...	B/SB-493	R60702
61	...	B/SB-523	R60702
61	...	B/SB-550	R60702
61	...	B/SB-551	R60702
61	...	B/SB-653	R60702
61	...	B/SB-658	R60702
62	...	B/SB-493	R60705
62	...	B/SB-523	R60705
62	...	B/SB-550	R60705
62	...	B/SB-551	R60705
62	...	B/SB-658	R60705

Copyrighted material licensed to Fermi National Laboratory by Clarivate Analytics (US) LLC, subscriptions.techstreet.com, downloaded on 2020-09-23 17:45:20 +0000 by Fermi National Laboratory User.
No further reproduction or distribution is permitted.

MANDATORY APPENDIX E PERMITTED SWPSS

(19)

The following AWS Standard Welding Procedure Specifications may be used under the requirements given in Article V:

Specification	Designation
Carbon Steel	
Shielded Metal Arc Welding	
Standard Welding Procedure Specification for Shielded Metal Arc Welding of Carbon Steel (M-1/P-1/S-1, Group 1 or 2), 1/8 through 1 1/2 inch Thick, E7018, As-Welded or PWHT Condition	B2.1-1-016-94 (R05)
Standard Welding Procedure Specification for Shielded Metal Arc Welding of Carbon Steel (M-1/P-1/S-1, Group 1 or 2), 1/8 through 1 1/2 inch Thick, E6010, As-Welded or PWHT Condition	B2.1-1-017-94 (R05)
Standard Welding Procedure Specification for Shielded Metal Arc Welding of Carbon Steel (M-1/P-1/S-1, Group 1 or 2), 1/8 through 1 1/2 inch Thick, E6010 (Vertical Uphill) Followed by E7018, As-Welded or PWHT Condition	B2.1-1-022-94 (R05)
Standard Welding Procedure Specification for Shielded Metal Arc Welding of Carbon Steel (M-1/P-1/S-1, Group 1 or 2), 1/8 through 1 1/2 inch Thick, E6010 (Vertical Downhill) Followed by E7018, As-Welded or PWHT Condition	B2.1-1-026-94 (R05)
Combination GTAW and SMAW	
Standard Welding Procedure Specification for Gas Tungsten Arc Welding Followed by Shielded Metal Arc Welding of Carbon Steel (M-1/P-1/S-1, Group 1 or 2), 1/8 through 1 1/2 inch Thick, ER70S-2 and E7018, As-Welded or PWHT Condition	B2.1-1-021-94 (R05)
Flux Cored Arc Welding	
Standard Welding Procedure Specification (WPS) for CO_2 Shielded Flux Cored Arc Welding of Carbon Steel (M-1/ P-1/S-1, Group 1 or 2), 1/8 through 1 1/2 inch Thick, E70T-1 and E71T-1, As-Welded Condition	B2.1-1-019-94 (R05)
Standard Welding Procedure Specification (WPS) for 75% Ar/25% CO_2 Shielded Flux Cored Arc Welding of Carbon Steel (M-1/P-1/S-1, Group 1 or 2), 1/8 through 1 1/2 inch Thick, E70T-1 and E71T-1, As-Welded or PWHT Condition	B2.1-1-020-94 (R05)
Carbon Steel — Primarily Pipe Applications	
Shielded Metal Arc Welding	
Standard Welding Procedure Specification (SWPS) for Shielded Metal Arc Welding of Carbon Steel (M-1/P-1/S-1, Group 1 or 2), 1/8 through 3/4 inch Thick, E6010 (Vertical Uphill) Followed by E7018 (Vertical Uphill), As- Welded Condition, Primarily Pipe Applications	B2.1-1-201-96 (R07)
Standard Welding Procedure Specification (SWPS) for Shielded Metal Arc Welding of Carbon Steel (M-1/P-1/S-1, Group 1 or 2), 1/8 through 3/4 inch Thick, E6010 (Vertical Downhill) Followed by E7018 (Vertical Uphill), As- Welded Condition, Primarily Pipe Applications	B2.1-1-202-96 (R07)
Standard Welding Procedure Specification (SWPS) for Shielded Metal Arc Welding of Carbon Steel (M-1/P-1/S-1, Group 1 or 2), 1/8 through 3/4 inch Thick, E6010 (Vertical Uphill), As-Welded Condition, Primarily Pipe Applications	B2.1-1-203-96 (R07)
Standard Welding Procedure Specification (SWPS) for Shielded Metal Arc Welding of Carbon Steel (M-1/P-1/S-1, Group 1 or 2), 1/8 through 3/4 inch Thick, E6010 (Vertical Downhill Root with the Balance Vertical Uphill), As- Welded Condition, Primarily Pipe Applications	B2.1-1-204-96 (R07)
Standard Welding Procedure Specification (SWPS) for Shielded Metal Arc Welding of Carbon Steel (M-1/P-1/S-1, Group 1 or 2), 1/8 through 1 1/2 inch Thick, E6010 (Vertical Uphill) Followed by E7018 (Vertical Uphill), As- Welded or PWHT Condition, Primarily Pipe Applications	B2.1-1-205-96 (R07)
Standard Welding Procedure Specification (SWPS) for Shielded Metal Arc Welding of Carbon Steel (M-1/P-1/S-1, Group 1 or 2), 1/8 through 1 1/2 inch Thick, E6010 (Vertical Downhill) Followed by E7018 (Vertical Uphill), As- Welded or PWHT Condition, Primarily Pipe Applications	B2.1-1-206-96 (R07)
Standard Welding Procedure Specification (SWPS) for Shielded Metal Arc Welding of Carbon Steel (M-1/P-1/S-1, Group 1 or 2), 1/8 through 1 1/2 inch Thick, E7018, As-Welded or PWHT Condition, Primarily Pipe Applications	B2.1-1-208-96 (R07)
Gas Tungsten Arc Welding	
Standard Welding Procedure Specification (SWPS) for Gas Tungsten Arc Welding of Carbon Steel (M-1/P-1/S-1, Group 1 or 2), 1/8 through 1 1/2 inch Thick, ER70S-2, As-Welded or PWHT Condition, Primarily Pipe Applications	B2.1-1-207-96 (R07)
Standard Welding Procedure Specification (SWPS) for Gas Tungsten Arc Welding with Consumable Insert Root of Carbon Steel (M-1/P-1/S-1, Group 1 or 2), 1/8 through 1 1/2 inch Thick, INMs-1 and ER70S-2, As-Welded or PWHT Condition, Primarily Pipe Applications	B2.1-1-210: 2001 (R12)

Copyrighted material licensed to Fermi National Laboratory by Clarivate Analytics (US) LLC, subscriptions.techstreet.com, downloaded on 2020-09-23 17:45:20 +0000 by Fermi National Laboratory User.
No further reproduction or distribution is permitted.

Table continued

Specification	Designation
Carbon Steel — Primarily Pipe Applications (Cont'd)	
Flux Cored Arc Welding	
Standard Welding Procedure Specification (SWPS) for Argon plus 25% Carbon Dioxide Shielded Flux Cored Arc Welding of Carbon Steel (M-1/P-1/S-1, Groups 1 and 2), 1/8 through 1 1/2 inch Thick, E7XT-X, As-Welded or PWHT Condition, Primarily Pipe Applications	B2.1-1-234: 2006
Gas Metal Arc Welding — Spray Transfer	
Standard Welding Procedure Specification (SWPS) for Argon plus 2% Oxygen Shielded Gas Metal Arc Welding (Spray Transfer Mode) of Carbon Steel (M-1/P-1/S-1, Groups 1 and 2), 1/8 through 1 1/2 inch Thick, E70S-3, Flat Position Only, As-Welded or PWHT Condition, Primarily Pipe Applications	B2.1-1-235: 2006
Combination GTAW and SMAW	
Standard Welding Procedure Specification (SWPS) for Gas Tungsten Arc Welding Followed by Shielded Metal Arc Welding of Carbon Steel (M-1/P-1/S-1, Group 1 or 2), 1/8 through 1 1/2 inch Thick, ER70S-2 and E7018, As- Welded or PWHT Condition, Primarily Pipe Applications	B2.1-1-209-96 (R07)
Standard Welding Procedure Specification (SWPS) for Gas Tungsten Arc Welding with Consumable Insert Root followed by Shielded Metal Arc Welding of Carbon Steel (M-1/P-1/S-1, Group 1 or 2), 1/8 through 1 1/2 inch Thick, INMs-1, ER70S-2, and E7018, As-Welded or PWHT Condition, Primarily Pipe Applications	B2.1-1-211: 2001 (R12)
Austenitic Stainless Steel Plate and Pipe	
Shielded Metal Arc Welding	
Standard Welding Procedure Specification (SWPS) for Shielded Metal Arc Welding of Austenitic Stainless Steel (M-8/P-8/S-8, Group 1), 1/8 through 1 1/2 inch Thick, As-Welded Condition	B2.1-8-023-94 (R05)
Gas Tungsten Arc Welding	
Standard Welding Procedure Specification (SWPS) for Gas Tungsten Arc Welding of Austenitic Stainless Steel (M-8/P-8/S-8, Group 1), 1/16 through 1 1/2 inch Thick, ER3XX, As-Welded Condition, Primarily Plate and Structural Applications	B2.1-8-024: 2001 (R12)
Combination GTAW and SMAW	
Standard Welding Procedure Specification (SWPS) for Gas Tungsten Arc Welding Followed by Shielded Metal Arc Welding of Austenitic Stainless Steel (M-8/P-8/S-8, Group 1), 1/8 through 1 1/2 inch Thick, ER3XX and 3XX-XX, As-Welded Condition, Primarily Plate and Structural Applications	B2.1-8-025: 2001 (R12)
Austenitic Stainless Steel Primarily Pipe Applications	
Shielded Metal Arc Welding	
Standard Welding Procedure Specification (SWPS) for Shielded Metal Arc Welding of Austenitic Stainless Steel (M-8/P-8/S-8, Group 1), 1/8 through 1 1/2 inch Thick, E3XX-XX, As-Welded Condition, Primarily Pipe Applications	B2.1-8-213-97 (R12)
Gas Tungsten Arc Welding	
Standard Welding Procedure Specification (SWPS) for Gas Tungsten Arc Welding of Austenitic Stainless Steel (M-8/P-8/S-8, Group 1), 1/16 through 1 1/2 inch Thick, ER3XX, As-Welded Condition, Primarily Pipe Applications	B2.1-8-212: 2001 (R11)
Standard Welding Procedure Specification (SWPS) for Gas Tungsten Arc Welding with Consumable Insert of Austenitic Stainless Steel (M-8/P-8/S-8, Group 1), 1/8 through 1 1/2 inch Thick, IN3XX and ER3XX, As-Welded Condition, Primarily Pipe Applications	B2.1-8-215: 2001 (R12)
Combination GTAW and SMAW	
Standard Welding Procedure Specification (SWPS) for Gas Tungsten Arc Welding Followed by Shielded Metal Arc Welding of Austenitic Stainless Steel (M-8/P-8/S-8, Group 1), 1/8 through 1 1/2 inch Thick, ER3XX and E3XX-XX, As-Welded Condition, Primarily Pipe Applications	B2.1-8-214: 2001 (R12)
Standard Welding Procedure Specification (SWPS) for Gas Tungsten Arc Welding with Consumable Insert Root followed by Shielded Metal Arc Welding of Austenitic Stainless Steel (M-8/P-8/S-8, Group 1), 1/8 through 1 1/2 inch Thick, IN3XX, ER3XXX, and E3XX-XX, As-Welded Condition, Primarily Pipe Applications	B2.1-8-216: 2001 (R12)
Carbon Steel to Austenitic Stainless Steel	
Gas Tungsten Arc Welding	
Standard Welding Procedure Specification (SWPS) for Gas Tungsten Arc Welding of Carbon Steel to Austenitic Stainless Steel (M-1/P-1/S-1, Groups 1 and 2 Welded to M-8/P-8/S-8, Group 1), 1/16 through 1 1/2 inch Thick, ER309(L), As-Welded Condition, Primarily Pipe Applications	B2.1-1/8-227: 2002 (R13)
Standard Welding Procedure Specification (SWPS) for Gas Tungsten Arc Welding with Consumable Insert Root of Carbon Steel to Austenitic Stainless Steel (M-1/P-1/S-1, Groups 1 and 2 Welded to M-8/P-8/S-8, Group 1), 1/16 through 1 1/2 inch Thick, IN309 and R309(L), As-Welded Condition, Primarily Pipe Applications	B2.1-1/8-230: 2002 (R13)

Copyrighted material licensed to Fermi National Laboratory by Clarivate Analytics (US) LLC, subscriptions.techstreet.com, downloaded on 2020-09-23 17:45:20 +0000 by Fermi National Laboratory User.
No further reproduction or distribution is permitted.

Table continued

Specification	Designation
Carbon Steel to Austenitic Stainless Steel (Cont'd)	
Shielded Metal Arc Welding	
Standard Welding Procedure Specification (SWPS) for Shielded Metal Arc Welding of Carbon Steel to Austenitic Stainless Steel (M-1/P-1/S-1, Groups 1 and 2 Welded to M-8/P-8/S-8, Group 1), $\frac{1}{8}$ through $1\frac{1}{2}$ inch Thick, E309(L)-15, -16, or -17, As-Welded Condition, Primarily Pipe Applications	B2.1-1/8-228: 2002 (R13)
Combination GTAW and SMAW	
Standard Welding Procedure Specification (SWPS) for Gas Tungsten Arc Welding Followed by Shielded Metal Arc Welding of Carbon Steel to Austenitic Stainless Steel (M-1/P-1/S-1 Groups 1 and 2 Welded to M-8/P-8/S-8, Group 1), $\frac{1}{8}$ through $1\frac{1}{2}$ inch Thick, ER309(L) and E309(L)-15, -16, or -17, As-Welded Condition, Primarily Pipe Applications	B2.1-1/8-229: 2002 (R13)
Standard Welding Procedure Specification (SWPS) for Gas Tungsten Arc Welding with Consumable Insert Root, Followed by Shielded Metal Arc Welding of Carbon Steel to Austenitic Stainless Steel (M-1/P-1/S-1 Groups 1 and 2 Welded to M-8/P-8/S-8, Group 1) $\frac{1}{8}$ through $1\frac{1}{2}$ inch Thick, IN309, ER309(L), and E309(L)-15, -16, -17, As-Welded Condition, Primarily Pipe Applications	B2.1-1/8-231: 2002

Copyrighted material licensed to Fermi National Laboratory by Clarivate Analytics (US) LLC, subscriptions.techstreet.com, downloaded on 2020-09-23 17:45:20 +0000 by Fermi National Laboratory User.
No further reproduction or distribution is permitted.

MANDATORY APPENDIX F
STANDARD UNITS FOR USE IN EQUATIONS

Table F-100
Standard Units for Use in Equations

Quantity	U.S. Customary Units	SI Units
Linear dimensions (e.g., length, height, thickness, radius, diameter)	inches (in.)	millimeters (mm)
Area	square inches (in.^{2})	square millimeters (mm^2)
Volume	cubic inches (in.^{3})	cubic millimeters (mm^3)
Section modulus	cubic inches (in.^{3})	cubic millimeters (mm^3)
Moment of inertia of section	inches^4 (in.^{4})	millimeters^4 (mm^4)
Mass (weight)	pounds mass (lbm)	kilograms (kg)
Force (load)	pounds force (lbf)	newtons (N)
Bending moment	inch-pounds (in.-lb)	newton-millimeters (N·mm)
Pressure, stress, stress intensity, and modulus of elasticity	pounds per square inch (psi)	megapascals (MPa)
Energy (e.g., Charpy impact values)	foot-pounds (ft-lb)	joules (J)
Temperature	degrees Fahrenheit (°F)	degrees Celsius (°C)
Absolute temperature	Rankine (°R)	kelvin (K)
Fracture toughness	ksi square root inches $\left(\text{ksi}\sqrt{\text{in.}}\right)$	MPa square root meters $\left(\text{MPa}\sqrt{\text{m}}\right)$
Angle	degrees or radians	degrees or radians
Boiler capacity	Btu/hr	watts (W)

Copyrighted material licensed to Fermi National Laboratory by Clarivate Analytics (US) LLC, subscriptions.techstreet.com, downloaded on 2020-09-23 17:45:20 +0000 by Fermi National Laboratory User.
No further reproduction or distribution is permitted.

NONMANDATORY APPENDIX G
GUIDANCE FOR THE USE OF U.S. CUSTOMARY AND SI UNITS IN THE ASME BOILER AND PRESSURE VESSEL CODE

(19) G-100 USE OF UNITS IN EQUATIONS

The equations in this Section are suitable for use with either the U.S. Customary or the SI units provided in Mandatory Appendix F, or with the units provided in the nomenclatures associated with the equations. It is the responsibility of the individual and organization performing the calculations to ensure that appropriate units are used. Either U.S. Customary or SI units may be used as a consistent set. When necessary to convert from one system of units to another, the units shall be converted to at least three significant figures for use in calculations and other aspects of construction.

G-200 GUIDELINES USED TO DEVELOP SI EQUIVALENTS

The following guidelines were used to develop SI equivalents:

(a) SI units are placed in parentheses after the U.S. Customary units in the text.

(b) In general, separate SI tables are provided if interpolation is expected. The table designation (e.g., table number) is the same for both the U.S. Customary and SI tables, with the addition of suffix "M" to the designator for the SI table, if a separate table is provided. In the text, references to a table use only the primary table number (i.e., without the "M"). For some small tables, where interpolation is not required, SI units are placed in parentheses after the U.S. Customary unit.

(c) Separate SI versions of graphical information (charts) are provided, except that if both axes are dimensionless, a single figure (chart) is used.

(d) In most cases, conversions of units in the text were done using hard SI conversion practices, with some soft conversions on a case-by-case basis, as appropriate. This was implemented by rounding the SI values to the number of significant figures of implied precision in the existing U.S. Customary units. For example, 3,000 psi has an implied precision of one significant figure. Therefore, the conversion to SI units would typically be to 20 000 kPa. This is a difference of about 3% from the "exact" or soft conversion of 20 684.27 kPa. However, the precision of the conversion was determined by the Committee on a case-by-case basis. More significant digits were included in the SI equivalent if there was any question. The values of allowable stress in Section II, Part D generally include three significant figures.

(e) Minimum thickness and radius values that are expressed in fractions of an inch were generally converted according to the following table:

Fraction, in.	Proposed SI Conversion, mm	Difference, %
1/32	0.8	− 0.8
3/64	1.2	− 0.8
1/16	1.5	5.5
3/32	2.5	− 5.0
1/8	3	5.5
5/32	4	− 0.8
3/16	5	− 5.0
7/32	5.5	1.0
1/4	6	5.5
5/16	8	− 0.8
3/8	10	− 5.0
7/16	11	1.0
1/2	13	− 2.4
9/16	14	2.0
5/8	16	− 0.8
11/16	17	2.6
3/4	19	0.3
7/8	22	1.0
1	25	1.6

(f) For nominal sizes that are in even increments of inches, even multiples of 25 mm were generally used. Intermediate values were interpolated rather than converting and rounding to the nearest millimeter. See examples in the following table. [Note that this table does not apply to nominal pipe sizes (NPS), which are covered below.]

Size, in.	Size, mm
1	25
1 1/8	29
1 1/4	32
1 1/2	38
2	50
2 1/4	57
2 1/2	64
3	75
3 1/2	89
4	100
4 1/2	114
5	125
6	150

Copyrighted material licensed to Fermi National Laboratory by Clarivate Analytics (US) LLC, subscriptions.techstreet.com, downloaded on 2020-09-23 17:45:20 +0000 by Fermi National Laboratory User.
No further reproduction or distribution is permitted.

Table continued

Size, in.	Size, mm
8	200
12	300
18	450
20	500
24	600
36	900
40	1 000
54	1 350
60	1 500
72	1 800

Size or Length, ft	Size or Length, m
3	1
5	1.5
200	60

(g) For nominal pipe sizes, the following relationships were used:

U.S. Customary Practice	SI Practice	U.S. Customary Practice	SI Practice
NPS 1/8	DN 6	NPS 20	DN 500
NPS 1/4	DN 8	NPS 22	DN 550
NPS 3/8	DN 10	NPS 24	DN 600
NPS 1/2	DN 15	NPS 26	DN 650
NPS 3/4	DN 20	NPS 28	DN 700
NPS 1	DN 25	NPS 30	DN 750
NPS 1 1/4	DN 32	NPS 32	DN 800
NPS 1 1/2	DN 40	NPS 34	DN 850
NPS 2	DN 50	NPS 36	DN 900
NPS 2 1/2	DN 65	NPS 38	DN 950
NPS 3	DN 80	NPS 40	DN 1000
NPS 3 1/2	DN 90	NPS 42	DN 1050
NPS 4	DN 100	NPS 44	DN 1100
NPS 5	DN 125	NPS 46	DN 1150
NPS 6	DN 150	NPS 48	DN 1200
NPS 8	DN 200	NPS 50	DN 1250
NPS 10	DN 250	NPS 52	DN 1300
NPS 12	DN 300	NPS 54	DN 1350
NPS 14	DN 350	NPS 56	DN 1400
NPS 16	DN 400	NPS 58	DN 1450
NPS 18	DN 450	NPS 60	DN 1500

(h) Areas in square inches (in.^{2}) were converted to square millimeters (mm^2), and areas in square feet (ft^2) were converted to square meters (m^2). See examples in the following table:

Area (U.S. Customary)	Area (SI)
1 in.^{2}	650 mm^2
6 in.^{2}	4 000 mm^2
10 in.^{2}	6 500 mm^2
5 ft^2	0.5 m^2

(i) Volumes in cubic inches (in.^{3}) were converted to cubic millimeters (mm^3), and volumes in cubic feet (ft^3) were converted to cubic meters (m^3). See examples in the following table:

Volume (U.S. Customary)	Volume (SI)
1 in.^{3}	16 000 mm^3
6 in.^{3}	100 000 mm^3
10 in.^{3}	160 000 mm^3
5 ft^3	0.14 m^3

(j) Although the pressure should always be in MPa for calculations, there are cases where other units are used in the text. For example, kPa is used for small pressures. Also, rounding was to one significant figure (two at the most) in most cases. See examples in the following table. (Note that 14.7 psi converts to 101 kPa, while 15 psi converts to 100 kPa. While this may seem at first glance to be an anomaly, it is consistent with the rounding philosophy.)

Pressure (U.S. Customary)	Pressure (SI)
0.5 psi	3 kPa
2 psi	15 kPa
3 psi	20 kPa
10 psi	70 kPa
14.7 psi	101 kPa
15 psi	100 kPa
30 psi	200 kPa
50 psi	350 kPa
100 psi	700 kPa
150 psi	1 MPa
200 psi	1.5 MPa
250 psi	1.7 MPa
300 psi	2 MPa
350 psi	2.5 MPa
400 psi	3 MPa
500 psi	3.5 MPa
600 psi	4 MPa
1,200 psi	8 MPa
1,500 psi	10 MPa

(k) Material properties that are expressed in psi or ksi (e.g., allowable stress, yield and tensile strength, elastic modulus) were generally converted to MPa to three significant figures. See example in the following table:

Strength (U.S. Customary)	Strength (SI)
95,000 psi	655 MPa

(l) In most cases, temperatures (e.g., for PWHT) were rounded to the nearest 5°C. Depending on the implied precision of the temperature, some were rounded to the nearest 1°C or 10°C or even 25°C. Temperatures colder than 0°F (negative values) were generally rounded to

Copyrighted material licensed to Fermi National Laboratory by Clarivate Analytics (US) LLC, subscriptions.techstreet.com, downloaded on 2020-09-23 17:45:20 +0000 by Fermi National Laboratory User.
No further reproduction or distribution is permitted.

the nearest 1°C. The examples in the table below were created by rounding to the nearest 5°C, with one exception:

Temperature, °F	Temperature, °C
70	20
100	38
120	50
150	65
200	95
250	120
300	150
350	175
400	205
450	230
500	260
550	290
600	315
650	345
700	370
750	400
800	425
850	455
900	480
925	495
950	510
1,000	540
1,050	565
1,100	595
1,150	620
1,200	650
1,250	675
1,800	980
1,900	1 040
2,000	1 095
2,050	1 120

G-300 SOFT CONVERSION FACTORS

The following table of "soft" conversion factors is provided for convenience. Multiply the U.S. Customary value by the factor given to obtain the SI value. Similarly, divide the SI value by the factor given to obtain the U.S. Customary value. In most cases it is appropriate to round the answer to three significant figures.

U.S. Customary	SI	Factor	Notes
in.	mm	25.4	...
ft	m	0.3048	...
in.^{2}	mm^2	645.16	...
ft^2	m^2	0.09290304	...
in.^{3}	mm^3	16,387.064	...
ft^3	m^3	0.02831685	...
U.S. gal	m^3	0.003785412	...
U.S. gal	liters	3.785412	...
psi	MPa (N/mm^2)	0.0068948	Used exclusively in equations
psi	kPa	6.894757	Used only in text and for nameplate
psi	bar	0.06894757	...
ft-lb	J	1.355818	...
°F	°C	$\frac{5}{9} \times$ (°F − 32)	Not for temperature difference
°F	°C	$\frac{5}{9}$	For temperature differences only
°R	K	$\frac{5}{9}$	Absolute temperature
lbm	kg	0.4535924	...
lbf	N	4.448222	...
in.-lb	N·mm	112.98484	Use exclusively in equations
ft-lb	N·m	1.3558181	Use only in text
ksi$\sqrt{\text{in.}}$	MPa$\sqrt{\text{m}}$	1.0988434	...
Btu/hr	W	0.2930711	Use for boiler rating and heat transfer
lb/ft^3	kg/m^3	16.018463	...

Copyrighted material licensed to Fermi National Laboratory by Clarivate Analytics (US) LLC, subscriptions.techstreet.com, downloaded on 2020-09-23 17:45:20 +0000 by Fermi National Laboratory User.
No further reproduction or distribution is permitted.

NONMANDATORY APPENDIX H WAVEFORM CONTROLLED WELDING

H-100 BACKGROUND

Advances in microprocessor controls and welding power source technology have resulted in the ability to develop waveforms for welding that improve the control of droplet shape, penetration, bead shape and wetting. Some welding characteristics that were previously controlled by the welder or welding operator are controlled by software or firmware internal to the power source. It is recognized that the use of controlled waveforms in welding can result in improvements in productivity and quality. The intention of this Code is to enable their use with both new and existing procedure qualifications.

The ASME Section IX heat input measurement methods in QW-409.1(a) and QW-409.1(b), were developed at a time when welding power source output was relatively constant. The heat input of welds made using waveform controlled power sources is not accurately represented by QW-409.1(a) due to the rapidly-changing outputs, phase shifts, and synergic changes, but is correctly represented by QW-409.1(b) or QW-409.1(c). During waveform controlled welding, current and voltage and values observed on the equipment meters no longer are valid for heat input determination, and must be replaced by instantaneous energy (joules) or power (joules/second or watts) to correctly calculate heat input. QW-409.1(c) more accurately reflects heat input changes when performing waveform controlled welding, but is also suitable for nonwaveform controlled (conventional) welding.

H-200 WAVEFORM CONTROLLED WELDING AND HEAT INPUT DETERMINATION

Power sources that support rapidly pulsing processes (e.g., GMAW-P) are the most common waveform controlled power sources. Power sources that are marketed as synergic, programmable, or microprocessor controlled are generally capable of waveform controlled welding. In these cases, heat input is calculated by the methods outlined in either QW-409.1(b) or QW-409.1(c) when performing procedure qualification or to determine compliance with a qualified procedure. If any doubt exists on whether waveform controlled welding is being performed, the welding equipment manufacturer should be consulted. It is recognized that waveform controls may not be active for all of the welding processes or equipment settings for a particular power source. When the waveform control features of the equipment are not used, the heat input determination methods of either QW-409.1(a), QW-409.1(b), or QW-409.1(c) are used.

When the welding equipment does not display instantaneous energy or power, an external meter with high frequency sampling capable of displaying instantaneous energy or power is typically used, or the welding equipment is upgraded or modified to display instantaneous energy or power.

Welding power sources or external meters typically display instantaneous energy as cumulative measurements of instantaneous energy, i.e., the sum of instantaneous energy measurements made during a time period such as trigger-on to trigger-off. The units of measurement may be joules (J). Other conveniently obtained units of energy, such as calories or British thermal units (Btu), may be used with the appropriate conversion factors. The other measurement that is needed to use the calculations given in QW-409.1(c)(1) is weld length.

Welding power sources or external meters typically display instantaneous power as average measurements, i.e., the average value of instantaneous power measurements made during a time period such as trigger-on to trigger-off. The unit of measurement may be watts (W). One watt is equal to 1 joule/second (J/s). Other conveniently obtained units of power such as horsepower (hp) or kilowatts (kW) may be used with the appropriate conversion factors. Because power must be multiplied by time to obtain energy, the arc-on time needs to be recorded, and the distance traveled during that time needs to be measured; with these data, the calculation in QW-409.1(c)(2) can be made. Either of the equations in QW-409.1(c)(1) and QW-409.1(c)(2) may be used, depending on whether total instantaneous energy (IE) or average instantaneous power (IP) is displayed.

H-300 NEW PROCEDURES QUALIFICATIONS

When qualifying a new procedure using waveform controlled welding, the instantaneous energy or power range is used in lieu of the current (amperage) and voltage ranges to determine the heat input per QW-409.1(c).

When qualifying a new procedure using nonwaveform controlled welding, either the current and voltage is recorded and heat input determined using the methods of QW-409.1(a) or QW-409.1(b), as previously required, or the instantaneous energy or power is recorded and the heat input determined by the method in QW-409.1(c).

Copyrighted material licensed to Fermi National Laboratory by Clarivate Analytics (US) LLC, subscriptions.techstreet.com, downloaded on 2020-09-23 17:45:20 +0000 by Fermi National Laboratory User.
No further reproduction or distribution is permitted.

H-400 EXISTING QUALIFIED PROCEDURES

Welding procedures previously qualified using nonwaveform controlled welding and heat input determined by QW-409.1(a) may continue to be used for waveform controlled welding, provided they are amended to require heat input determination for production welds using the methods of QW-409.1(c). Welding procedures previously qualified using nonwaveform controlled welding and heat input determined by QW-409.1(b) continue to be applicable for waveform controlled welding without changes to the heat input determination method.

(a) To determine if the heat input of a waveform controlled production weld meets the heat input range of a welding procedure qualified with nonwaveform controlled welding with heat input determined using QW-409.1(a)

(1) the heat input of the production weld is determined using instantaneous power or energy per the method of QW-409.1(c)

(2) the heat input of the production weld is compared to the heat input range of the welding procedure specification

(b) to determine if the heat input of a nonwaveform controlled production weld meets the heat input range of a welding procedure qualified with waveform controlled welding with heat input determined using QW-409.1(c)

(1) the heat input of the production weld is determined using QW-409.1(a) or QW-409.1(c)

(2) the heat input of the production weld is compared to the heat input range of the welding procedure specification

H-500 PERFORMANCE QUALIFICATIONS

Separate performance qualifications are not required for waveform controlled welding. However, it is recognized that a welder or welding operator may require instruction on proper use of the equipment. The extent of such instruction is best determined by the organization, as needed to understand how to properly set up and adjust the equipment for welding and conformance to the WPS requirements.

Power sources capable of waveform controlled welding often have additional operator settings that are typically not used during nonwaveform controlled welding. It is important for a welder to be familiar with other equipment parameters that can influence the overall welding performance. These can include the mode, arc control, program, cable length, wire feed speed, trim, and other machine and software settings.

Copyrighted material licensed to Fermi National Laboratory by Clarivate Analytics (US) LLC, subscriptions.techstreet.com, downloaded on 2020-09-23 17:45:20 +0000 by Fermi National Laboratory User.
No further reproduction or distribution is permitted.

MANDATORY APPENDIX J
GUIDELINE FOR REQUESTING P-NUMBER ASSIGNMENTS FOR BASE METALS NOT LISTED IN TABLE QW/QB-422

J-100 INTRODUCTION

This Mandatory Appendix provides requirements to Code users for submitting requests for P-Number assignments to base metals not listed in Table QW/QB-422. Such requests shall be limited to base metals that are listed in ASME Code Section II, Parts A or B; ASTM; or other recognized national or international specifications. QW-420 should be referenced before requesting a P-Number, to see if the base metal can be considered a P-Number under existing rules. For new materials, users shall reference the Submittal of Technical Inquiries to the Boiler and Pressure Vessel Committee in this Section and the Guideline on the Approval of New Materials, under ASME Boiler and Pressure Vessel Code in Section II, Part D. P-Number assignment does not constitute approval of a base metal for ASME Code construction. The applicable Construction Code shall be consulted for base metals that are acceptable for use.

J-200 REQUEST FORMAT

A request for a P-Number shall include the following:

(a) product application or use

(b) the material specification, grade, class, and type as applicable

(c) the mechanical properties and chemical analysis requirements

(d) welding or brazing data, such as comparable P-Numbers; published welding or brazing data; welding procedure specifications and procedure qualification data; or brazing procedure specifications and procedure qualification data

(e) properties of welded or brazed base metal joints, if less than the minimum specified in the applicable specification

J-300 SUBMITTALS

Submittals to and responses from the Committee shall meet the following:

(a) Submittal. Requests for P-Number assignments shall be in English and preferably in the type-written form. However, legible handwritten requests will also be considered. They shall include the name, address, telephone number, fax number, and e-mail address, if available, of the requester and be mailed to The American Society of Mechanical Engineers, Attn: Secretary, BPV IX Committee, Two Park Avenue, New York, NY 10016–5990. As an alternative, requests may be submitted via e-mail to secretaryBPV@asme.org.

(b) Response. The Secretary of the ASME BPV IX Committee shall acknowledge receipt of each properly prepared request and shall provide written response to the requester upon completion of the requested action by the Code Committee.

Copyrighted material licensed to Fermi National Laboratory by Clarivate Analytics (US) LLC, subscriptions.techstreet.com, downloaded on 2020-09-23 17:45:20 +0000 by Fermi National Laboratory User.
No further reproduction or distribution is permitted.

NONMANDATORY APPENDIX K
GUIDANCE ON INVOKING SECTION IX REQUIREMENTS IN OTHER CODES, STANDARDS, SPECIFICATIONS, AND CONTRACT DOCUMENTS

K-100 BACKGROUND AND PURPOSE

ASME Section IX provides rules for the qualification of welding, brazing, and fusing personnel and the procedures that they follow in welding, brazing and fusing. While the historical application of Section IX has been in service to the ASME Boiler and Pressure Vessel Code and the ASME B31 Codes for Pressure Piping, Section IX is invoked by many other standards without the benefit of members of the Section IX Committee participating in those committees. In addition, Section IX is invoked in specifications and related contract documents. The purpose of this Nonmandatory Appendix is to provide guidance on invoking Section IX in other documents in a clear, concise, and accurate manner.

K-200 SCOPE OF SECTION IX AND WHAT REFERENCING DOCUMENTS MUST ADDRESS

Section IX addresses only the mandatory content of welding, brazing, and fusing procedures; the qualification of those procedures; and the qualification of personnel who follow those procedures in the manufacture, fabrication, assembly, and installation of welded, brazed, and fused products. Accordingly, to ensure construction of suitable products, the requirements for the service conditions, materials used, the design of joints, preheating, postweld heat treatment (PWHT), metallurgical effects of welding, acceptance criteria for weld quality, and related examinations must be addressed in the Codes, standards, specifications, or contract documents that invoke Section IX.

Further, construction codes may specify different requirements than those specified by Section IX; for example, ASME Section III has requirements for PWHT of procedure qualification test coupons that are more restrictive than those of Section IX, and ASME B31.1 allows organizations to use welding procedure specifications (WPSs) qualified by a technically competent group or agency, whereas Section IX requires each organization to qualify WPSs themselves. When such requirements are specified in the referencing construction Codes that invoke Section IX, these requirements take precedence over those of Section IX, and the organization is required to comply with them.

Specifications or contract documents that are required to follow Section IX may add additional requirements, and the organization shall comply with both sets of requirements.

When the reference to Section IX is not the result of mandatory requirements, such as laws, but is a matter of choice, the specification or contract document may impose additional or different requirements than those in Section IX, and the organization shall comply with them. Material specifications are an example of this.

Most standards that refer to Section IX consider the requirements of Section IX to be adequate to cover the basic needs for the content of welding, brazing, and fusing procedures and for qualification of those procedures, as well as for the qualification of the personnel who use them. However, for some applications, additional information may be required from the invoking party, as noted in K-300.

K-300 RECOMMENDED WORDING — GENERAL (19)

When invoking Section IX in general, the following wording is recommended:

"Welding, brazing, and fusing shall be performed using procedures and personnel qualified in accordance with the requirements of ASME BPVC Section IX."

When the above is specified, qualification for the following are automatically included:

(a) all welding processes that are listed in QW-250 for groove and fillet welding

(b) use of standard welding procedures specifications (SWPSs) listed in Mandatory Appendix E

(c) application of hard-facing weld metal overlay (hardness values shall be a matter of agreement between the supplier and the purchaser)

(d) application of corrosion-resistant weld metal overlay (chemical composition of the weld overlay surface shall be a matter of agreement between the supplier and the purchaser)

(e) laser beam lap joints

Copyrighted material licensed to Fermi National Laboratory by Clarivate Analytics (US) LLC, subscriptions.techstreet.com, downloaded on 2020-09-23 17:45:20 +0000 by Fermi National Laboratory User.
No further reproduction or distribution is permitted.

(f) joining of clad materials
(g) attachment of applied linings

K-301 RECOMMENDED WORDING FOR TOUGHNESS — QUALIFIED APPLICATIONS

When invoking Section IX and qualification of the WPS for toughness applications is required, the following wording is recommended:

"Welding procedures shall be qualified for toughness, and the supplementary essential variables of Section IX shall apply."

The referencing construction code shall also be specified.

K-302 RECOMMENDED WORDING — TUBE-TO-TUBESHEET WELDING

When invoking Section IX for qualification of tube-to-tubesheet welding procedures and personnel, and qualification by use of mock-ups is desired, the following wording is recommended:

"Welding procedures, welders, and welding operators shall be qualified using mock-ups in accordance with Section IX."

Note that if qualification using mock-ups is not specified but qualification to Section IX is, tube-to-tubesheet welding procedures and personnel may also be qualified following the standard groove welding rules.

K-303 RECOMMENDED WORDING — TEMPER BEAD WELDING

When invoking Section IX for qualification of temper bead welding procedures, the following wording is recommended:

"Temper bead welding procedures shall be prepared and qualified in accordance with Section IX."

K-304 RECOMMENDED CODE CASE TEMPLATE (19)

Figure K-305 provides a proposed Code Case template to assist users and ensure consistent presentation of welding qualification requirements for material Code Cases.

Copyrighted material licensed to Fermi National Laboratory by Clarivate Analytics (US) LLC, subscriptions.techstreet.com, downloaded on 2020-09-23 17:45:20 +0000 by Fermi National Laboratory User.
No further reproduction or distribution is permitted.

(**19**)

Figure K-305
Proposed Code Case Template

Approval Date: *[Month Day, Year]*
Code Cases will remain available for use until annulled by the applicable Standards Committee.

Case *[Number]*
Material Grade, Type, and Form(s)
Section(s) *[Number(s)]*

Inquiry: Under what conditions may *[material grade, type, and form]* be used in the welded construction of *[pressure vessel type or piping system]*?

Reply: It is the opinion of the Committee that the material described in the Inquiry may be used in the welded construction of *[pressure vessel type or piping system]*, provided the following requirements are met:

(a) *Product specification or product form limitations, if any.*
(b) *Thickness limitations, if any.*
(c) *Specific chemical composition ranges (refer to applicable tables).*
(d) *Allowable stresses (refer to applicable tables).*
(e) *Special tests, if required.*
(f) *Welding process limitations, if any.*
(g) *Heat treatment requirements, if any.*
(h) *Welding qualification requirements. The following examples provide standard wording for two common Code Case situations:*

Example 1: For Code Cases specifying a non-ASME recognized material, the following standard sentence may be considered: "Separate welding procedure and performance qualifications shall be conducted in accordance with Section IX."

Example 2: For Code Cases where the material has been assigned to a P-Number, the following standard sentences may be considered: "Welding procedure and performance qualifications shall be conducted in accordance with Section IX. This material shall be considered P-Number *[XX]*."

(i) All other applicable rules of Section *[number]* shall be met.
(j) This Case number shall be referenced in the documentation and marking of the material and shown on the Manufacturer's Data Report.

GENERAL NOTE: Italicized and/or bracketed text indicates instructions or information that will be unique to each Code Case.

Copyrighted material licensed to Fermi National Laboratory by Clarivate Analytics (US) LLC, subscriptions.techstreet.com, downloaded on 2020-09-23 17:45:20 +0000 by Fermi National Laboratory User.
No further reproduction or distribution is permitted.

NONMANDATORY APPENDIX L
WELDERS AND WELDING OPERATORS QUALIFIED UNDER ISO 9606-1:2012 AND ISO 14732-2013

L-100 INTRODUCTION

When a welder or a welding operator welds a test coupon or makes a production weld, that person does not weld one way when the applicable standard is ASME and another way when the applicable standard is AWS, EN, JIS, or ISO. Recognizing this, recent revisions by ISO TC44, to ISO 9606-1, and ISO 14732 bring them much closer to the requirements of Section IX. This Appendix discusses what is necessary for an organization that is testing welders or welding operators under the above ISO standards to also certify that those welders and welding operators are qualified to Section IX.

This Appendix is based on the requirements of ISO 9606-1:2012 and ISO 14732:2013.

L-200 ADMINISTRATIVE REQUIREMENTS

The following nontechnical requirements must be met:

(a) When a welder or welding operator is tested, the WPS followed during the test must be a WPS qualified to Section IX.

(b) Welding of the test coupon must be done under the full supervision and control of the organization that will employ that welder or welding operator; this may not be delegated to another organization.

(c) Testing of test coupon may be performed by others, but the qualifying organization is responsible for ensuring that work performed by others is in compliance with the requirements of Section IX.

(d) The completed qualification record must be certified by signature or other means described in the organization's quality control system by the organization that supervised the welder or welding operator during welding of the test coupon.

L-300 TECHNICAL REQUIREMENTS

The qualification record must record the essential variables for the welding process and list the ranges qualified. While the "actual values" recorded on the test record will be the same as for a test record prepared according to ISO 9606-1 or ISO 14732, the ranges qualified will be different for a record prepared according to Section IX.

Care should be taken to select material used for the test coupon from those that are assigned a P-Number under QW-420 and filler metals that are assigned F-Numbers in accordance with QW-432 in order to ensure full interchangeability with other materials that are assigned P-Numbers or F-Numbers.

Since the forms may be in any format as long as the actual values, ranges qualified, and test results are recorded, a record showing the ranges qualified under both ISO and ASME may be on separate forms or they may be on one form at the discretion of the organization.

L-400 TESTING REQUIREMENTS

When evaluating a test coupon, the following should be noted by the organization:

(a) The requirements for test coupons that have been mechanically tested according to the requirements of ISO 9606-1 or ISO 14732 and found acceptable also satisfy the requirements of Section IX.

(b) Radiographic and ultrasonic examination technique and personnel requirements satisfying the requirements of ISO 9606-1 or ISO 14732 satisfy the requirements of Section IX.

(c) Radiographic and ultrasonic examination acceptance criteria satisfying the requirements of ISO 9606-1 or ISO 14732 also satisfy the requirements of Section IX, except that indications characterized as linear slag may not exceed the thickness of the test coupon divided by 3 (i.e., the flaw length may not exceed $t/3$); this is more restrictive than ISO 5817, quality level B, which allows elongated slag inclusions to be equal in length to the thickness of the test coupon.

(d) When using the ultrasonic test method, the test coupon must be $^1/_4$ in. (6 mm) thick or thicker.

(e) Test coupons tested by fracture test according to ISO 9017 do not satisfy the requirements of Section IX.

Copyrighted material licensed to Fermi National Laboratory by Clarivate Analytics (US) LLC, subscriptions.techstreet.com, downloaded on 2020-09-23 17:45:20 +0000 by Fermi National Laboratory User.
No further reproduction or distribution is permitted.

2019 ASME Boiler and Pressure Vessel Code

AN INTERNATIONAL CODE

Since its first issuance in 1914, the ASME Boiler and Pressure Vessel Code (BPVC) has been a flagship for modern international standards development. Each new edition reaffirms ASME's commitment to enhance public safety and encourage technological advancement to meet the needs of a changing world. Sections of the BPVC have been incorporated into law in the United States and Canada, and are used in more than 100 countries. The BPVC has long been considered essential within the electric power generation, petrochemical, and transportation industries, among others.

ASME also provides BPVC users with integrated suites of related offerings, including

- referenced standards
- related standards and guidelines
- conformity assessment programs
- personnel certification programs
- learning and development solutions
- ASME Press books and journals

You gain unrivaled insight direct from the BPVC source, along with the professional quality and real-world solutions you have come to expect from ASME.

For additional information and to order:
Phone: 1.800.THE.ASME
(1.800.843.2763)
Email: customercare@asme.org
Website: go.asme.org/bpvc

ISBN 978-0-7918-7290-1

Copyrighted material licensed to Fermi National Laboratory by Clarivate Analytics (US) LLC, subscriptions.techstreet.com, downloaded on 2020-09-23 17:45:20 +0000 by Fermi National Laboratory User.
No further reproduction or distribution is permitted.