REV	DESCRIPTION	DRAWN	DATE
		APPROVED	DATE

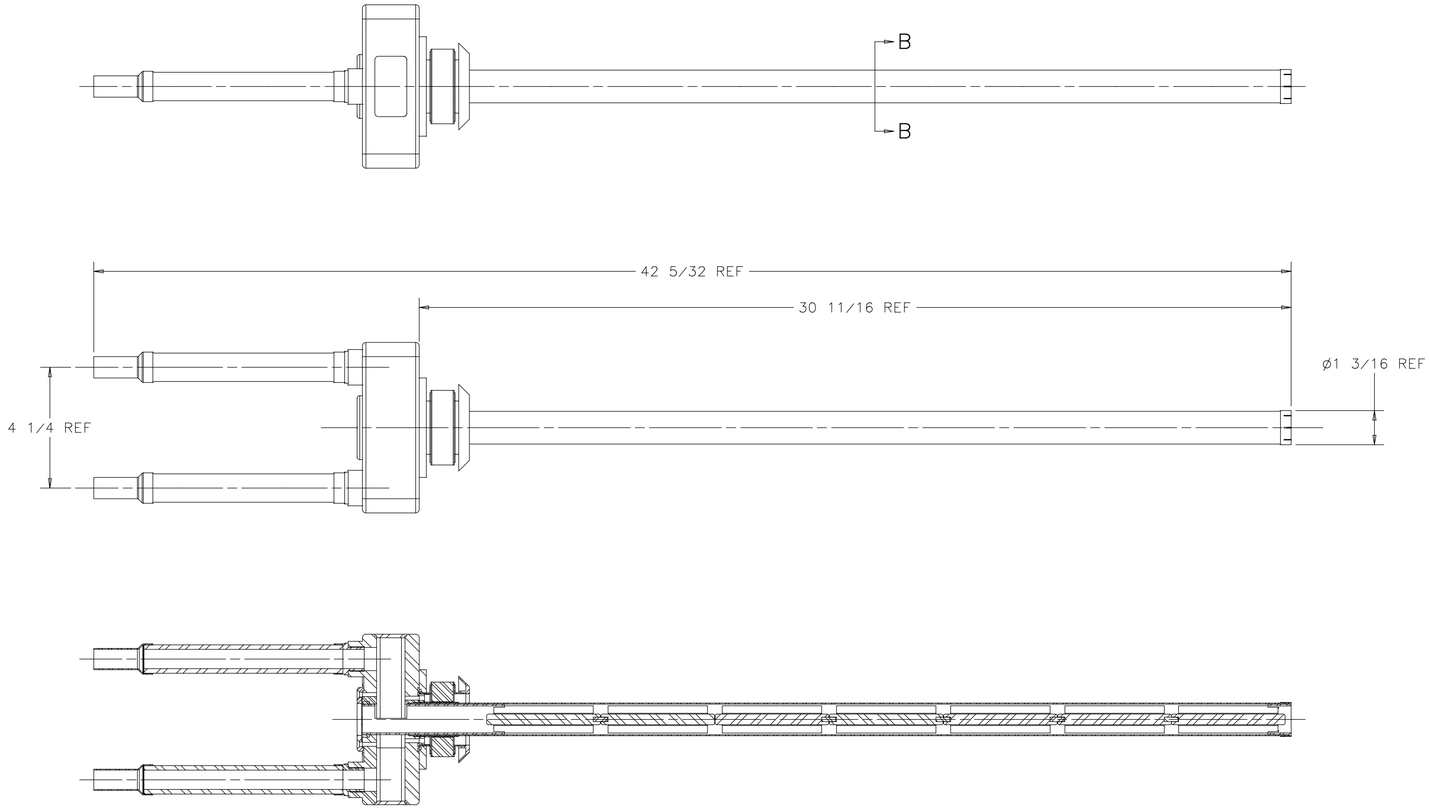

SECTION A-A

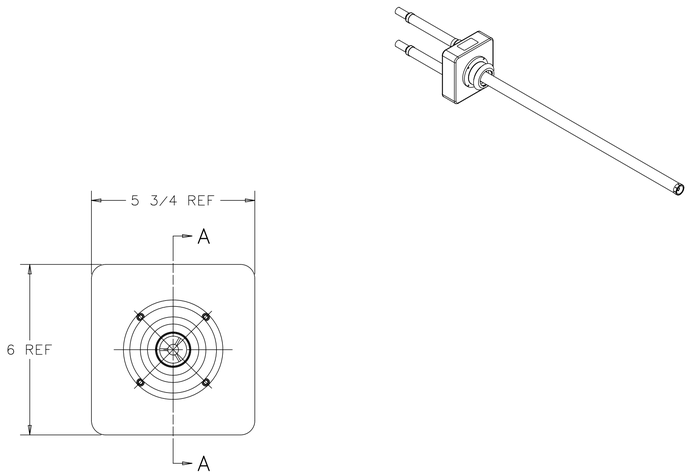

SECTION B-B

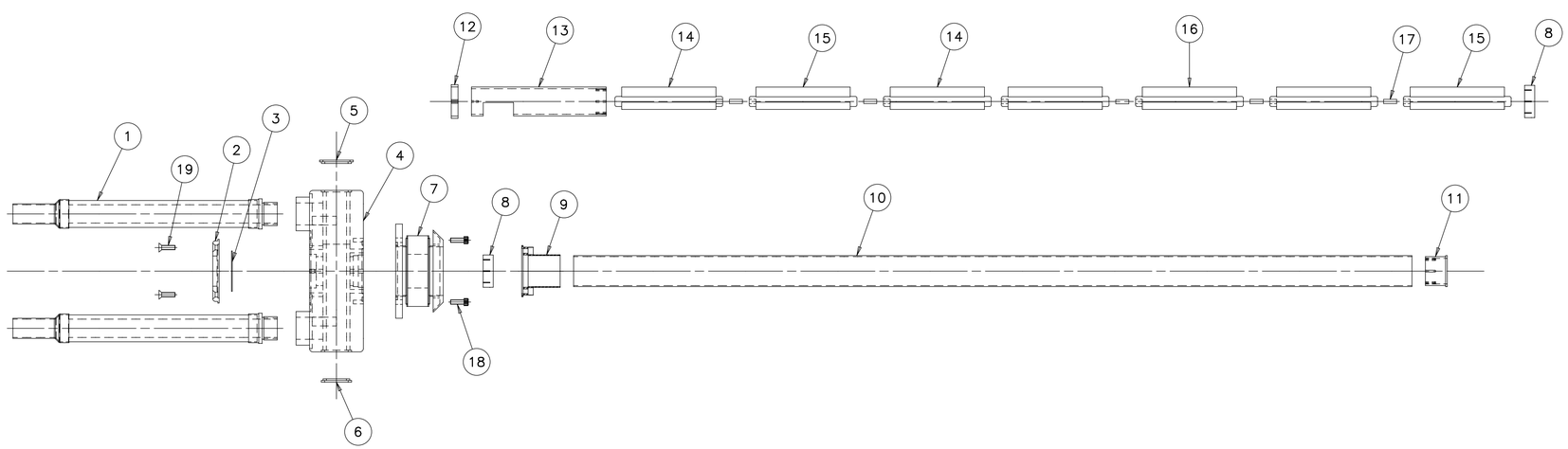

NOTE: MADE FROM LOS ALAMOS PROTOTYPE DRAWING NUMBER 126Y-267800

ITEM	PART NO.	DESCRIPTION OR SIZE	QTY.
19	PURCHASE	#8-32 UNC X .50 S'STL FHCS	4
18	PURCHASE	#8-32 UNC X .50 S'STL SHCS	4
17	MB-416464	SLUG LOCATING PIN	5
16	MB-416454	MIDDLE TARGET SLUG	3
15	MB-416453	DOWNSTREAM TARGET SLUG	2
14	MB-416455	UPSTREAM TARGET SLUG	2
13	MB-416456	UPSTREAM TARGET SLUG LOCATOR	1
12	MB-416462	UPSTREAM LOCATOR RING	1
11	MB-416458	DOWNSTREAM TARGET SLUG LOCATOR	1
10	MB-416467	DOWNSTREAM OUTER TUBE	1
9	MB-416463	OUTER TUBE FLANGE	1
8	MB-416461	OUTER TUBE LOCK RING	2
7	MC-416450	BELLOWS CONTACT ASSEMBLY	1
6	MB-416466	BASE BLOCK PLUG 2	1
5	MB-416465	BASE BLOCK PLUG	1
4	MD-416457	TARGET BASE BLOCK	1
3	MB-416459	BERYLLIUM BASE BLOCK WINDOW	1
2	MB-416460	UPSTREAM BE WINDOW FLANGE	1
1	MB-416446	COOLING TUBE CERAMIC ASSEMBLY	2

PARTS LIST

UNLESS OTHERWISE SPECIFIED			ORIGINATOR	R.REILLY	26-APR-2005
DECIMAL	FRACTIONS	ANGLES	DRAWN	R.STEWART	26-APR-2005
± .010	± 1/16	± .5°	CHECKED	R.REILLY	27-JUN-2005
			APPROVED	R.REILLY	27-JUN-2005

1. BREAK ALL SHARP EDGES .015 MAX.
2. DO NOT SCALE DRAWING.
3. DIMENSIONS BASED UPON ASME Y14.5M-1994
4. MAX. ALL MACH. SURFACES 63
5. DRAWING UNITS: U.S. INCH

USED ON

MATERIAL
SEE PARTS LIST

FERMI NATIONAL ACCELERATOR LABORATORY
UNITED STATES DEPARTMENT OF ENERGY

MINIBOONE TARGET HALL
HORN MH1 TARGET
HORN MH1 TARGET ASSEMBLY

SCALE	DRAWING NUMBER	SHEET	REV
3:8	6755.170-MD-416445	1 OF 1	

CREATED WITH : Ideas11NXSeries | GROUP: ACCELERATOR MECH. SUPPT.

REV	DESCRIPTION	DRAWN	DATE
		APPROVED	DATE

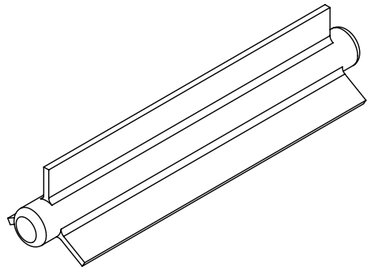

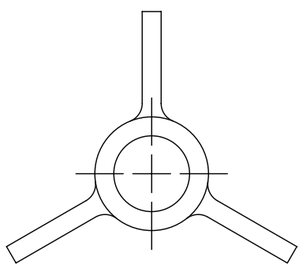

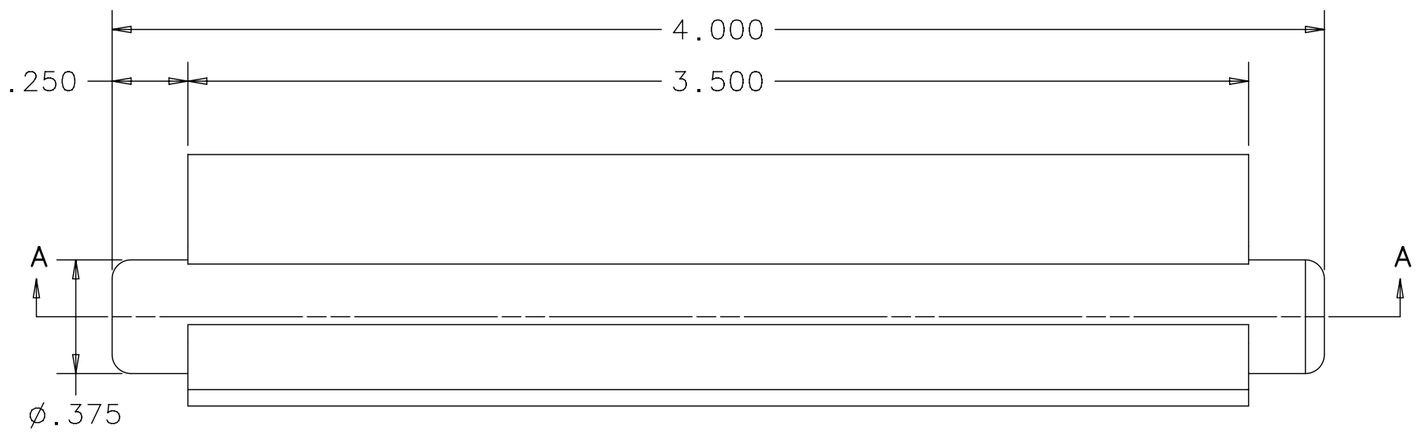

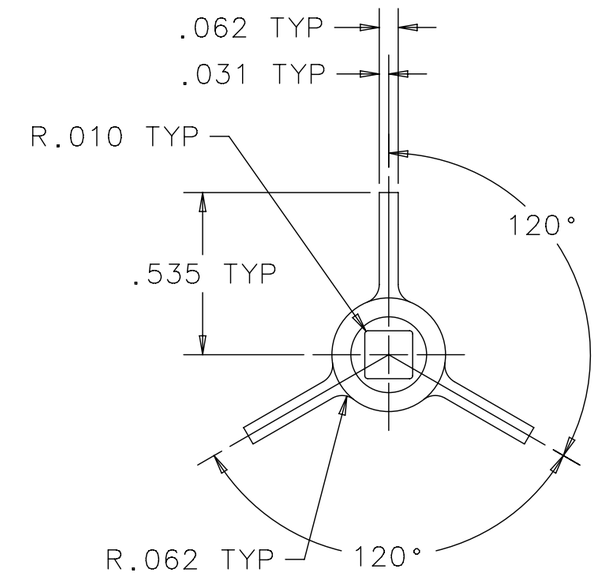

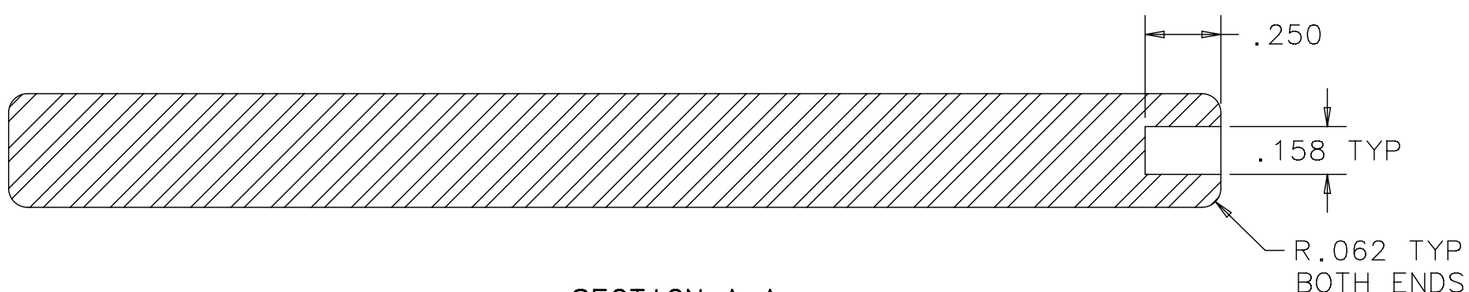

SECTION A-A

NOTE: MADE FROM LOS ALAMOS PROTOTYPE DRAWING NUMBER 126Y-267800

UNLESS OTHERWISE SPECIFIED			ORIGINATOR	R.REILLY	26-APR-2005
DECIMAL	FRACTIONS	ANGLES	DRAWN	R.STEWART	26-APR-2005
± .005	± 1/32	± .5°	CHECKED	R.REILLY	27-JUN-2005
			APPROVED	R.REILLY	27-JUN-2005

1. BREAK ALL SHARP EDGES .015 MAX.
2. DO NOT SCALE DRAWING.
3. DIMENSIONS BASED UPON ASME Y14.5M-1994
4. MAX. ALL MACH. SURFACES 63
5. DRAWING UNITS: U.S. INCH

USED ON: MD-416445

MATERIAL: STANDARD GRADE BERYLLIUM S-200-F

FERMI NATIONAL ACCELERATOR LABORATORY
UNITED STATES DEPARTMENT OF ENERGY

MINIBOONE TARGET HALL
HORN MH1 TARGET
DOWMSTREAM TARGET SLUG

SCALE	DRAWING NUMBER	SHEET	REV
2:1	6755.170-MB-416453	1 OF 1	

CREATED WITH : Ideas11NXSeries | GROUP: ACCELERATOR MECH. SUPPT.

REV	DESCRIPTION	DRAWN	DATE
		APPROVED	DATE

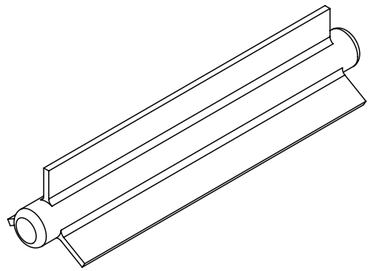

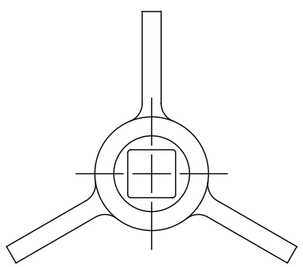

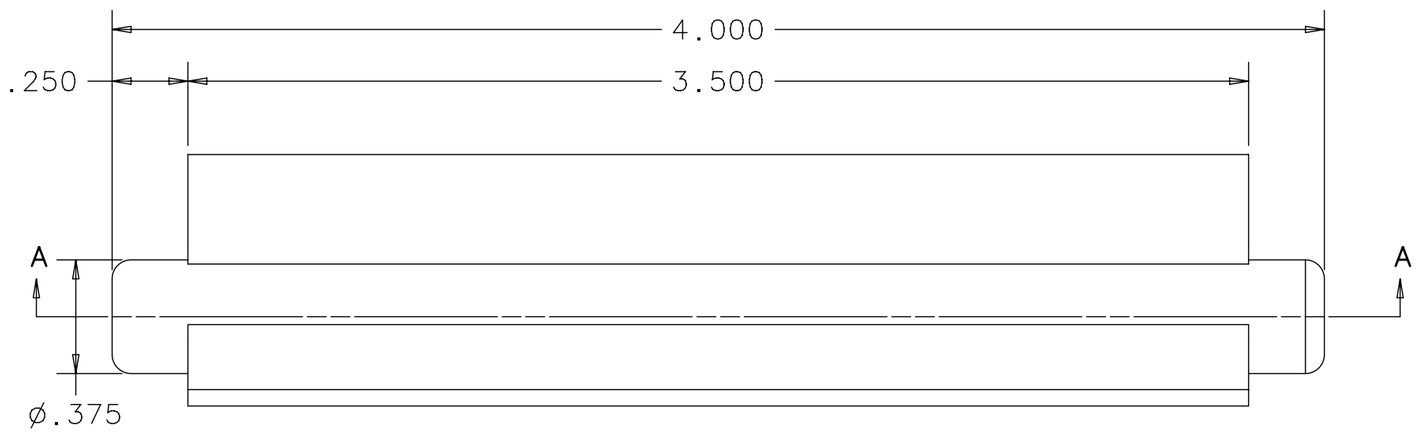

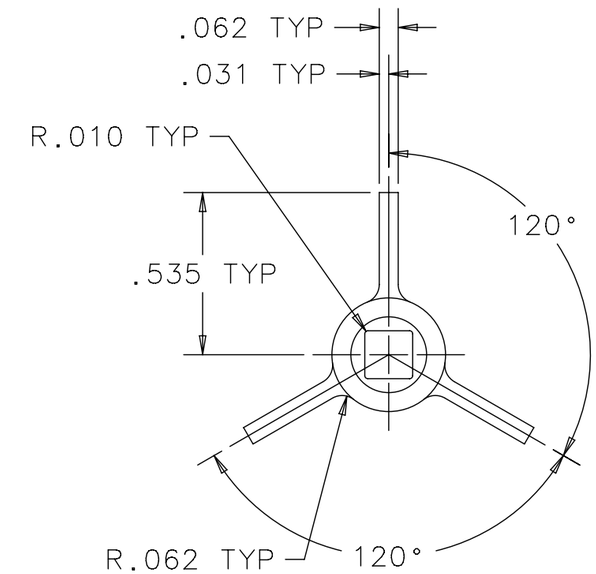

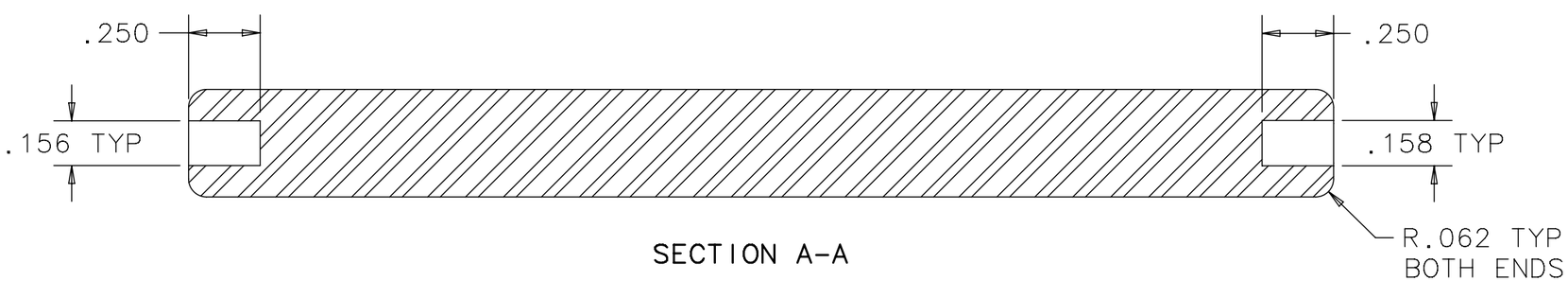

SECTION A-A

NOTE: MADE FROM LOS ALAMOS PROTOTYPE DRAWING NUMBER 126Y-267800

UNLESS OTHERWISE SPECIFIED			ORIGINATOR	R.REILLY	26-APR-2005
DECIMAL	FRACTIONS	ANGLES	DRAWN	R.STEWART	26-APR-2005
± .005	± 1/32	± .5°	CHECKED	R.REILLY	27-JUN-2005
			APPROVED	R.REILLY	27-JUN-2005

1. BREAK ALL SHARP EDGES .015 MAX.
2. DO NOT SCALE DRAWING.
3. DIMENSIONS BASED UPON ASME Y14.5M-1994
4. MAX. ALL MACH. SURFACES 63
5. DRAWING UNITS: U.S. INCH

USED ON: MD-416445

MATERIAL: STANDARD GRADE BERYLLIUM S-200-F

FERMI NATIONAL ACCELERATOR LABORATORY
UNITED STATES DEPARTMENT OF ENERGY

MINIBOONE TARGET HALL
HORN MH1 TARGET
MIDDLE TARGET SLUG

SCALE	DRAWING NUMBER	SHEET	REV
2:1	6755.170-MB-416454	1 OF 1	

CREATED WITH : Ideas11NXSeries | GROUP: ACCELERATOR MECH. SUPPT.

REV	DESCRIPTION	DRAWN	DATE
		APPROVED	DATE

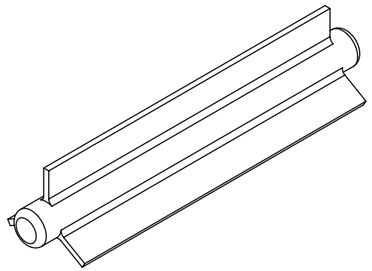

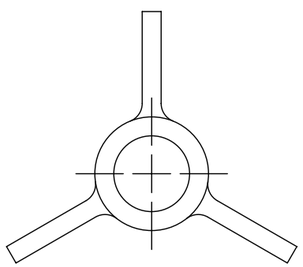

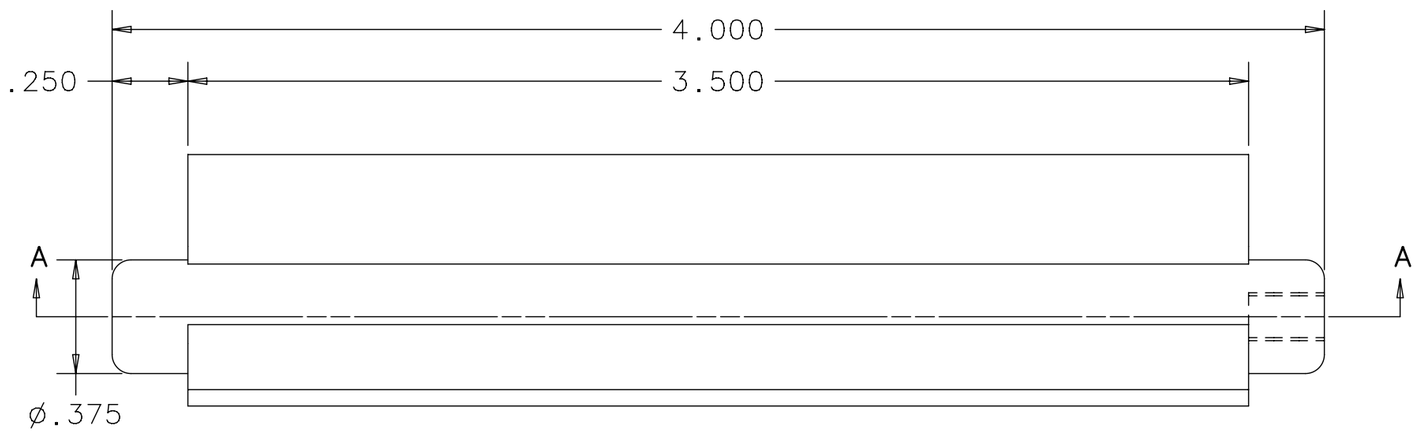

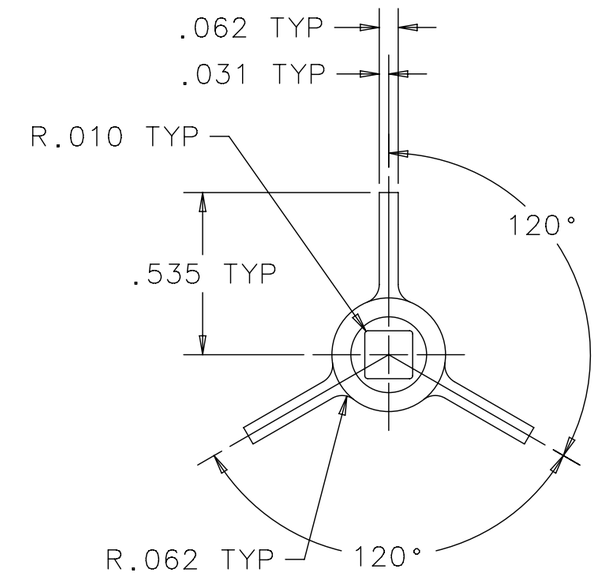

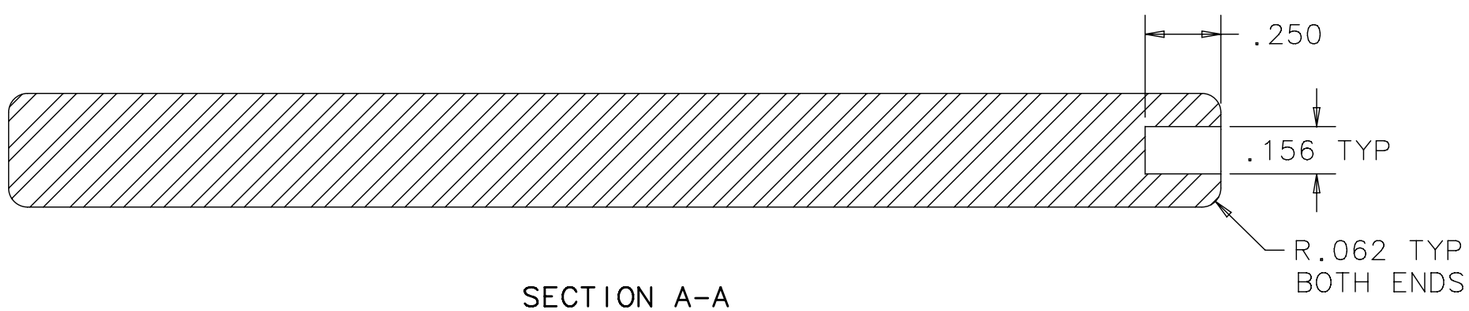

SECTION A-A

NOTE: MADE FROM LOS ALAMOS PROTOTYPE DRAWING NUMBER 126Y-267800

UNLESS OTHERWISE SPECIFIED			ORIGINATOR	R.REILLY	26-APR-2005
DECIMAL	FRACTIONS	ANGLES	DRAWN	R.STEWART	26-APR-2005
± .005	± 1/32	± .5°	CHECKED	R.REILLY	27-JUN-2005
			APPROVED	R.REILLY	27-JUN-2005

1. BREAK ALL SHARP EDGES .015 MAX.
2. DO NOT SCALE DRAWING.
3. DIMENSIONS BASED UPON ASME Y14.5M-1994
4. MAX. ALL MACH. SURFACES 63
5. DRAWING UNITS: U.S. INCH

USED ON: MD-416445

MATERIAL: STANDARD GRADE BERYLLIUM S-200-F

FERMI NATIONAL ACCELERATOR LABORATORY
UNITED STATES DEPARTMENT OF ENERGY

MINIBOONE TARGET HALL
HORN MH1 TARGET
UPSTREAM TARGET SLUG

SCALE	DRAWING NUMBER	SHEET	REV
2:1	6755.170-MB-416455	1 OF 1	

CREATED WITH : Ideas11NXSeries | GROUP: ACCELERATOR MECH. SUPPT.

REV	DESCRIPTION	DRAWN	DATE
		APPROVED	DATE

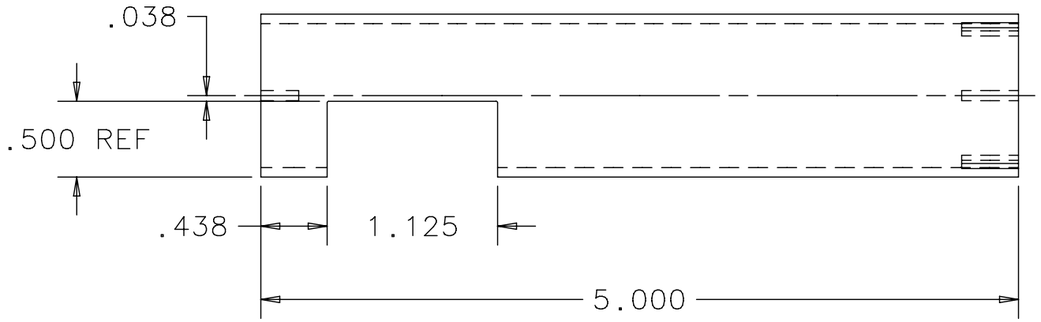

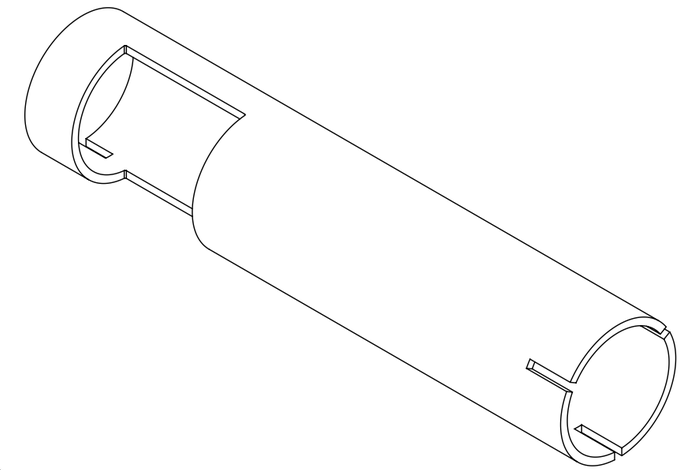

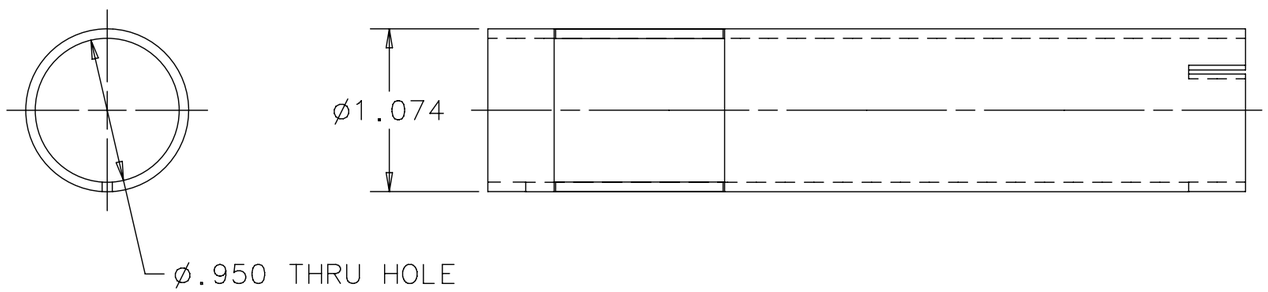

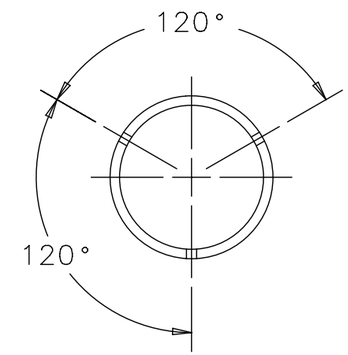

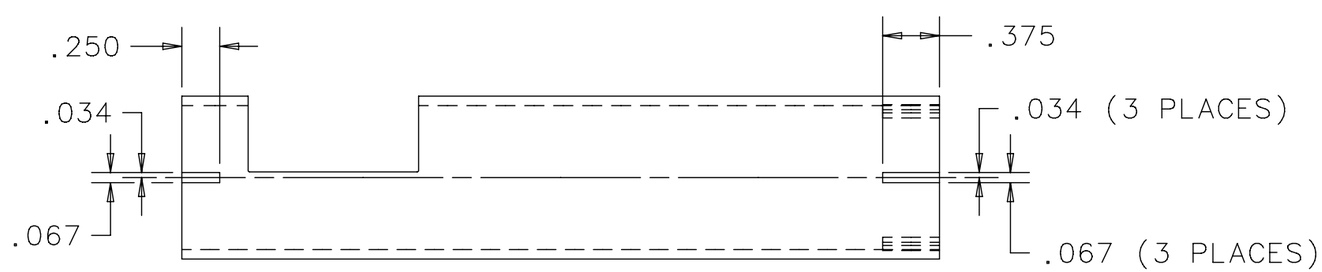

NOTE: MADE FROM LOS ALAMOS PROTOTYPE DRAWING NUMBER 126Y-267800

UNLESS OTHERWISE SPECIFIED			ORIGINATOR	R.REILLY	26-APR-2005
DECIMAL	FRACTIONS	ANGLES	DRAWN	R.STEWART	26-APR-2005
± .005	± 1/32	± .5°	CHECKED	R.REILLY	27-JUN-2005
1. BREAK ALL SHARP EDGES .015 MAX. 2. DO NOT SCALE DRAWING. 3. DIMENSIONS BASED UPON ASME Y14.5M-1994 4. MAX. ALL MACH. SURFACES 63 5. DRAWING UNITS: U.S. INCH			APPROVED	R.REILLY	27-JUN-2005
			USED ON	MD-416445	
			MATERIAL	STANDARD GRADE BERYLLIUM S-200-F	

FERMI NATIONAL ACCELERATOR LABORATORY
UNITED STATES DEPARTMENT OF ENERGY

MINIBOONE TARGET HALL
HORN MH1 TARGET
UPSTREAM TARGET SLUG LOCATOR

SCALE	DRAWING NUMBER	SHEET	REV
FULL	6755.170-MB-416456	1 OF 1	

CREATED WITH : Ideas11NXSeries | GROUP: ACCELERATOR MECH. SUPPT.

REV	DESCRIPTION	DRAWN	DATE
		APPROVED	DATE

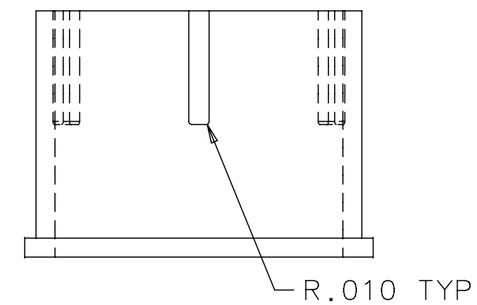

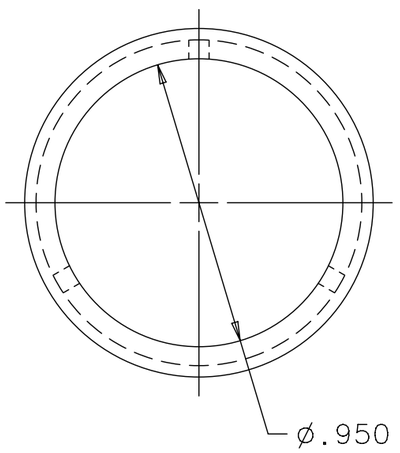

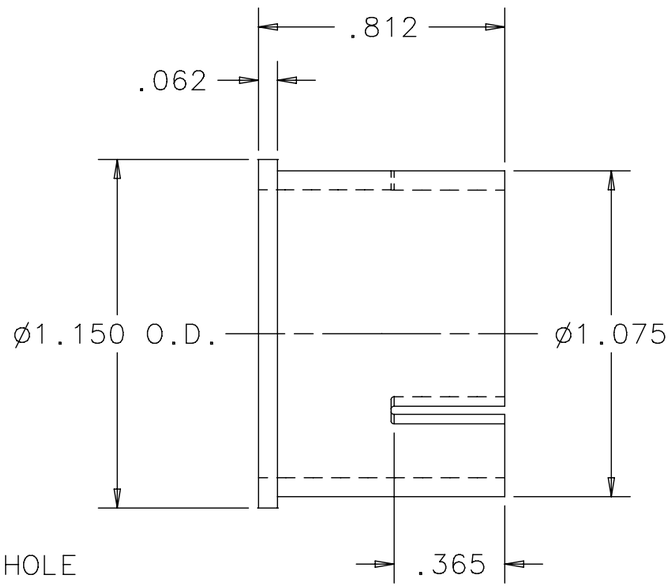

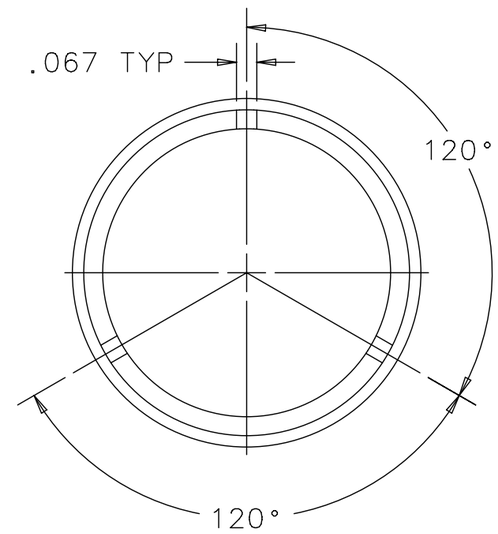

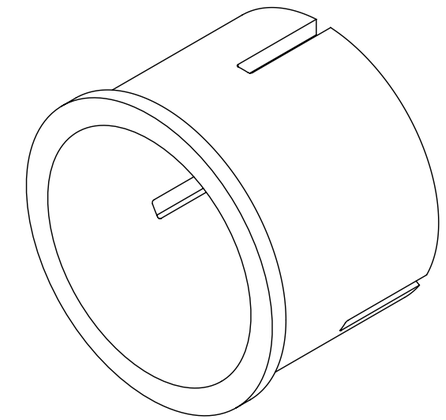

UNLESS OTHERWISE SPECIFIED			ORIGINATOR	R.REILLY	26-APR-2005
DECIMAL	FRACTIONS	ANGLES	DRAWN	R.STEWART	26-APR-2005
± .005	± 1/32	± 63	CHECKED	R.REILLY	27-JUN-2005
			APPROVED	R.REILLY	27-JUN-2005

1. BREAK ALL SHARP EDGES .015 MAX.
2. DO NOT SCALE DRAWING.
3. DIMENSIONS BASED UPON ASME Y14.5M-1994
4. MAX. ALL MACH. SURFACES 63
5. DRAWING UNITS: U.S. INCH

USED ON: MD-416445

MATERIAL: STANDARD GRADE BERYLLIUM S-200-F

FERMI NATIONAL ACCELERATOR LABORATORY
UNITED STATES DEPARTMENT OF ENERGY

MINIBOONE TARGET HALL
HORN MH1 TARGET
DOWNSTREAM TARGET SLUG LOCATOR

SCALE	DRAWING NUMBER	SHEET	REV
2:1	6755.170-MB-416458	1 OF 1	

CREATED WITH : Ideas11NXSeries | GROUP: ACCELERATOR MECH. SUPPT.

NOTE: MADE FROM LOS ALAMOS PROTOTYPE DRAWING NUMBER 126Y-267800

REV	DESCRIPTION	DRAWN	DATE
		APPROVED	DATE

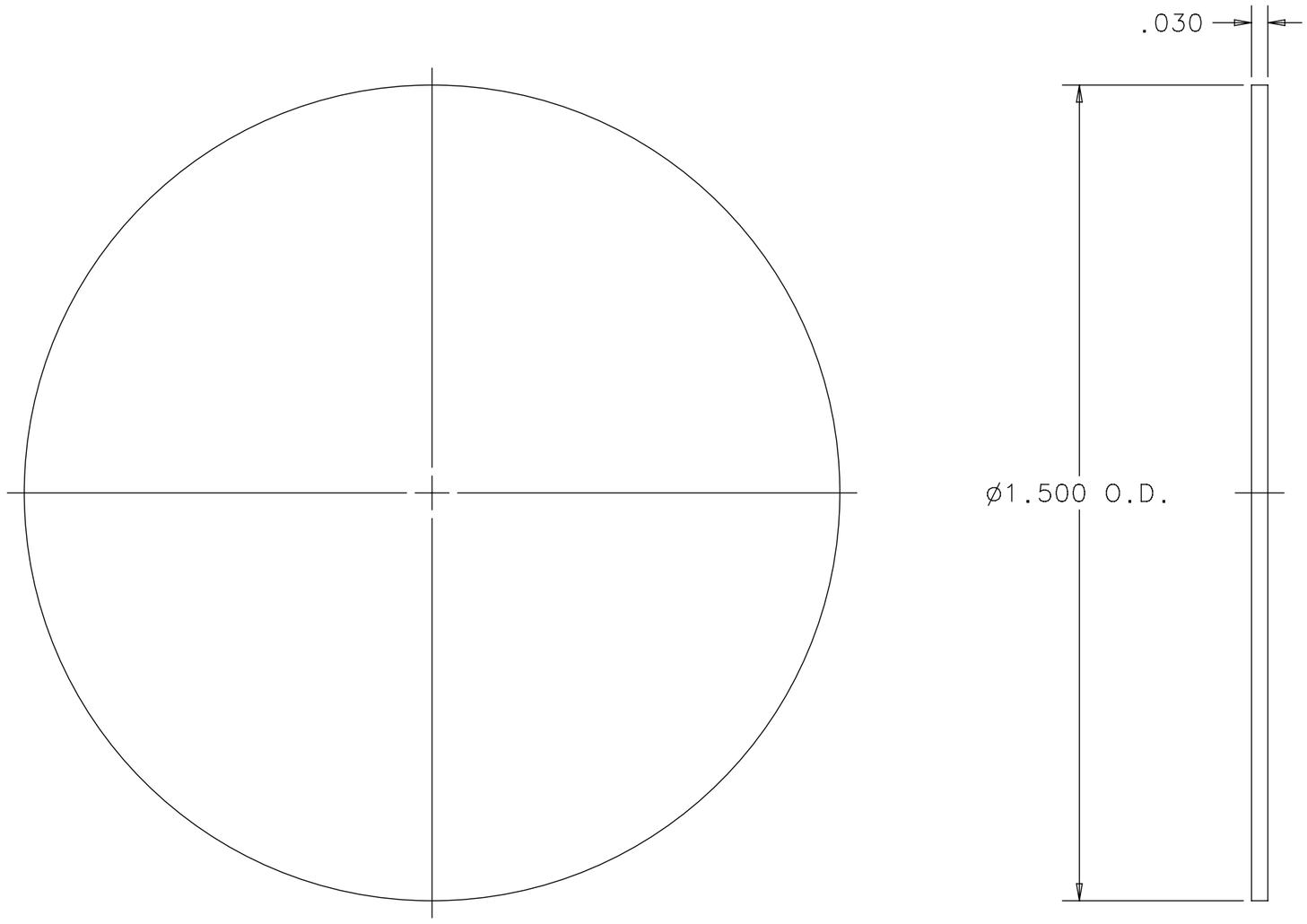

NOTE: MADE FROM LOS ALAMOS PROTOTYPE DRAWING NUMBER 126Y-267800

UNLESS OTHERWISE SPECIFIED			ORIGINATOR	R.REILLY	26-APR-2005
DECIMAL	FRACTIONS	ANGLES	DRAWN	R.STEWART	26-APR-2005
± .005	± 1/32	± .5°	CHECKED	R.REILLY	27-JUN-2005
			APPROVED	R.REILLY	27-JUN-2005

1. BREAK ALL SHARP EDGES .015 MAX.
2. DO NOT SCALE DRAWING.
3. DIMENSIONS BASED UPON ASME Y14.5M-1994
4. MAX. ALL MACH. SURFACES 63
5. DRAWING UNITS: U.S. INCH

USED ON: MD-416445

MATERIAL: STANDARD GRADE BERYLLIUM S-200-F

FERMI NATIONAL ACCELERATOR LABORATORY
UNITED STATES DEPARTMENT OF ENERGY

MINIBOONE TARGET HALL
HORN MH1 TARGET
BERYLLIUM BASE BLOCK WINDOW

SCALE	DRAWING NUMBER	SHEET	REV
2:1	6755.170-MB-416459	1 OF 1	

CREATED WITH : Ideas11NXSeries | GROUP: ACCELERATOR MECH. SUPPT.

REV	DESCRIPTION	DRAWN	DATE
		APPROVED	DATE

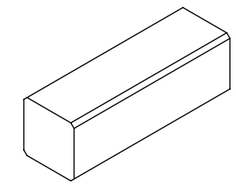

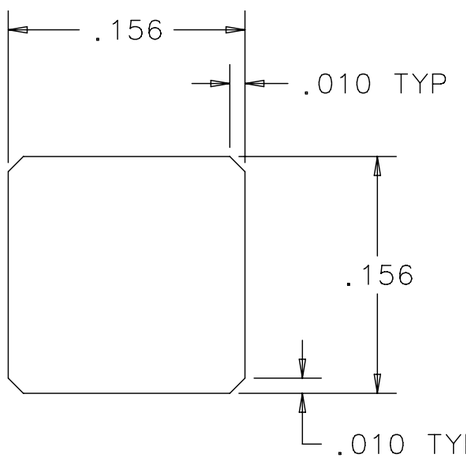

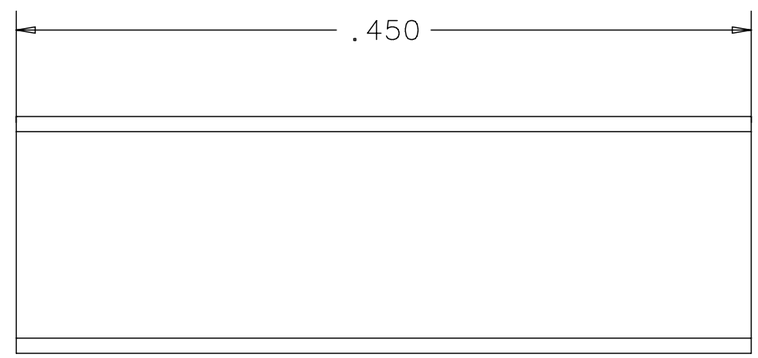

NOTE: MADE FROM LOS ALAMOS PROTOTYPE DRAWING NUMBER 126Y-267800

UNLESS OTHERWISE SPECIFIED			ORIGINATOR	R.REILLY	26-APR-2005
DECIMAL	FRACTIONS	ANGLES	DRAWN	R.STEWART	26-APR-2005
± .005	± 1/32	± .5°	CHECKED	R.REILLY	27-JUN-2005
			APPROVED	R.REILLY	27-JUN-2005

1. BREAK ALL SHARP EDGES .015 MAX.
2. DO NOT SCALE DRAWING.
3. DIMENSIONS BASED UPON ASME Y14.5M-1994
4. MAX. ALL MACH. SURFACES 63
5. DRAWING UNITS: U.S. INCH

USED ON: MD-416445

MATERIAL: STANDARD GRADE BERYLLIUM S-200-F

FERMI NATIONAL ACCELERATOR LABORATORY
UNITED STATES DEPARTMENT OF ENERGY

MINIBOONE TARGET HALL
HORN MH1 TARGET
SLUG LOCATING PIN

SCALE	DRAWING NUMBER	SHEET	REV
10:1	6755.170-MB-416464	1 OF 1	

CREATED WITH : Ideas11NXSeries | GROUP: ACCELERATOR MECH. SUPPT.

REV	DESCRIPTION	DRAWN	DATE
		APPROVED	DATE

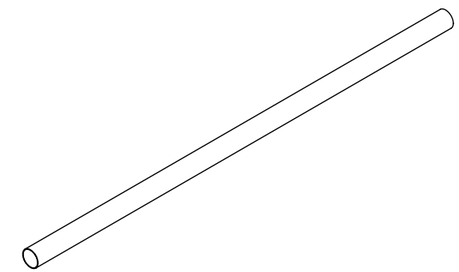

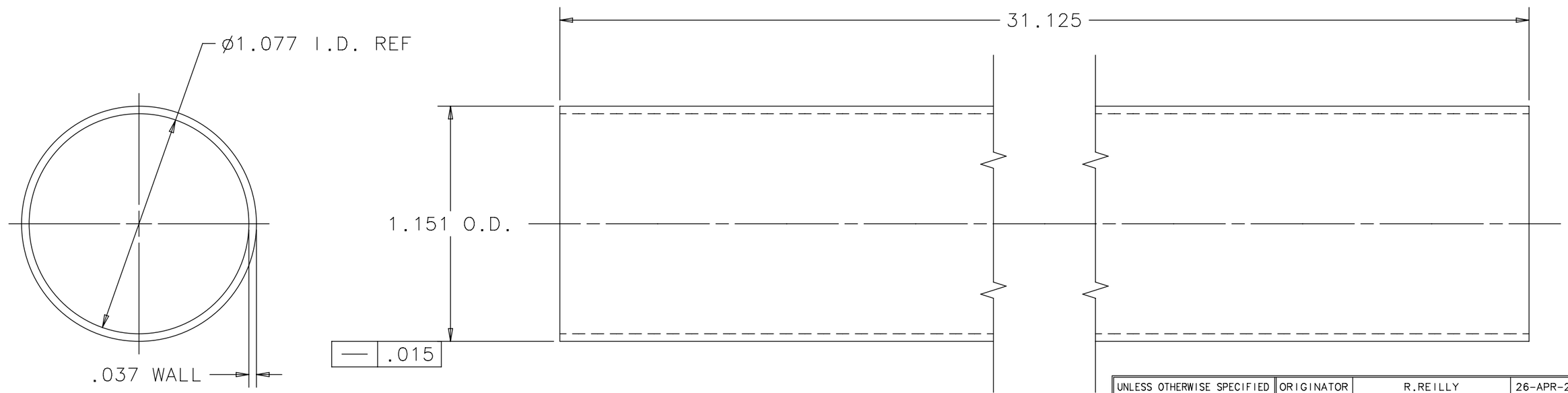

NOTE: MADE FROM LOS ALAMOS PROTOTYPE DRAWING NUMBER 126Y-267800

UNLESS OTHERWISE SPECIFIED			ORIGINATOR	R.REILLY	26-APR-2005
DECIMAL	FRACTIONS	ANGLES	DRAWN	R.STEWART	26-APR-2005
± .005	± 1/64	± .5°	CHECKED	R.REILLY	27-JUN-2005
			APPROVED	R.REILLY	27-JUN-2005

1. BREAK ALL SHARP EDGES .015 MAX.
2. DO NOT SCALE DRAWING.
3. DIMENSIONS BASED UPON ASME Y14.5M-1994
4. MAX. ALL MACH. SURFACES 63
5. DRAWING UNITS: U.S. INCH

USED ON: MD-416445

MATERIAL: STANDARD GRADE BERYLLIUM S-200-F

FERMI NATIONAL ACCELERATOR LABORATORY
UNITED STATES DEPARTMENT OF ENERGY

MINIBOONE TARGET HALL
HORN MH1 TARGET
TARGET DS OUTER TUBE

SCALE	DRAWING NUMBER	SHEET	REV
2:1	6755.170-MB-416467	1 OF 1	

CREATED WITH : Ideas11NXSeries | GROUP: ACCELERATOR MECH. SUPPT.

REV	DESCRIPTION	DRAWN	DATE
		APPROVED	DATE

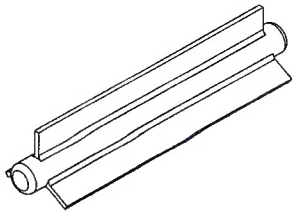

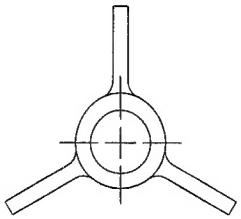

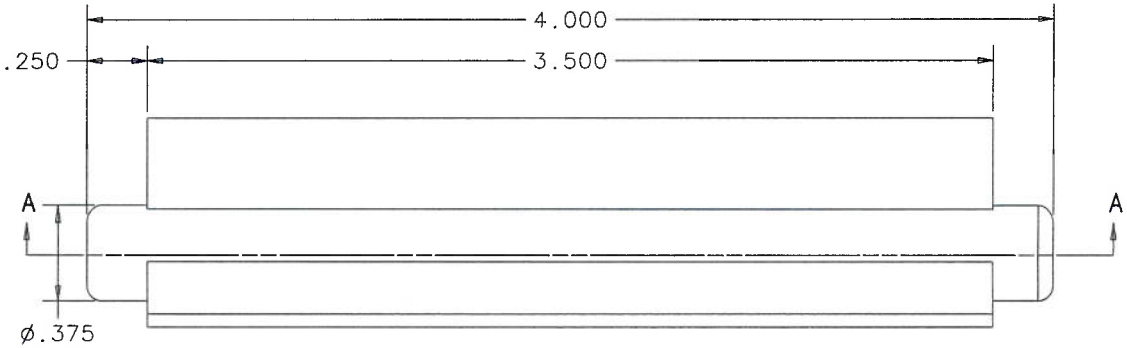

R.032 OR UNDERCUT CORNERS

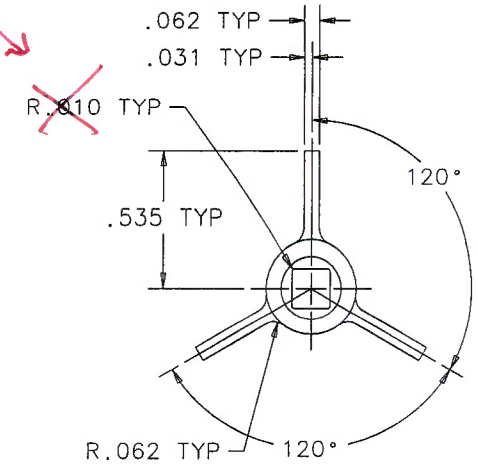

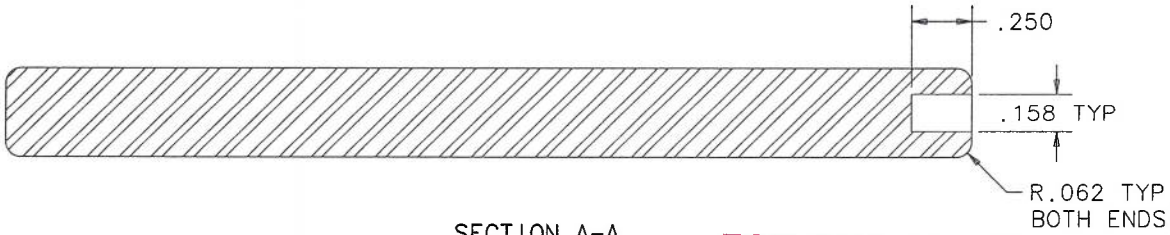

SECTION A-A

FOR QUOTATION ONLY

DATE 11 July 2019

NOTE: MADE FROM LOS ALAMOS PROTOTYPE DRAWING NUMBER 126Y-267800

UNLESS OTHERWISE SPECIFIED			ORIGINATOR	R.REILLY	26-APR-2005
DECIMAL	FRACTIONS	ANGLES	DRAWN	R.STEWART	26-APR-2005
± .005	± 1/32	± .5°	CHECKED	R.REILLY	27-JUN-2005
1. BREAK ALL SHARP EDGES .015 MAX. 2. DO NOT SCALE DRAWING. 3. DIMENSIONS BASED UPON ASME Y14.5M-1994. 4. MAX. ALL MACH. SURFACES 63 5. DRAWING UNITS: U.S. INCH			APPROVED	R.REILLY	27-JUN-2005
			USED ON	MD-416445	
			MATERIAL	STANDARD GRADE BERYLLIUM S-200-F	

FERMI NATIONAL ACCELERATOR LABORATORY
UNITED STATES DEPARTMENT OF ENERGY

MINIBOONE TARGET HALL
HORN MH1 TARGET
DOWMSTREAM TARGET SLUG

SCALE	DRAWING NUMBER	SHEET	REV
2:1	6755.170-MB-416453	1 OF 1	

CREATED WITH : Ideas11NXSeries | GROUP: ACCELERATOR MECH. SUPPT.

REV	DESCRIPTION	DRAWN	DATE
		APPROVED	DATE

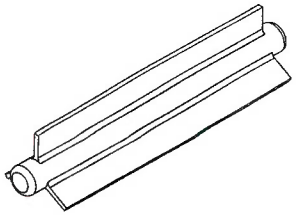

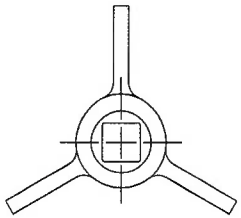

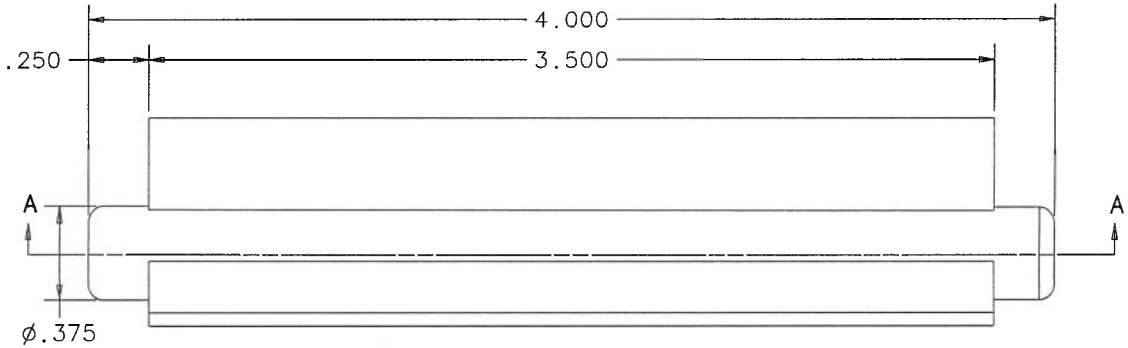

R.032 OR UNDERCUT CORNERS

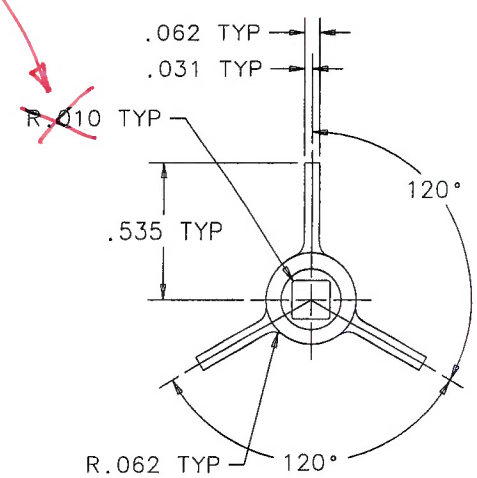

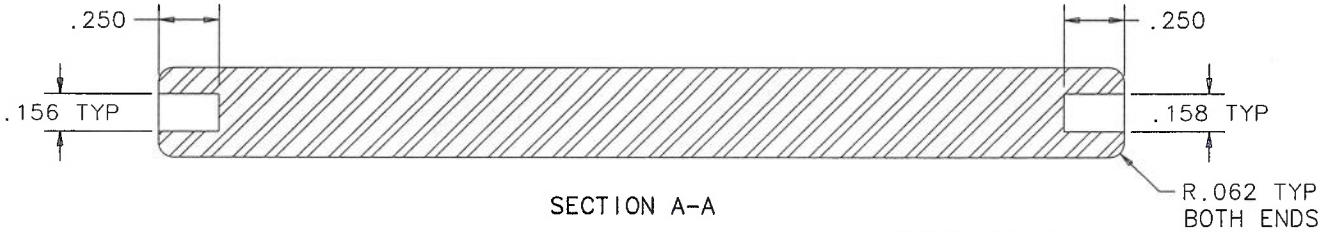

SECTION A-A

FOR QUOTATION ONLY

DATE 11 July 2019

NOTE: MADE FROM LOS ALAMOS PROTOTYPE DRAWING NUMBER 126Y-267800

UNLESS OTHERWISE SPECIFIED			ORIGINATOR	R.REILLY	26-APR-2005
DECIMAL	FRACTIONS	ANGLES	DRAWN	R.STEWART	26-APR-2005
± .005	± 1/32	± .5°	CHECKED	R.REILLY	27-JUN-2005
1. BREAK ALL SHARP EDGES .015 MAX. 2. DO NOT SCALE DRAWING. 3. DIMENSIONS BASED UPON ASME Y14.5M-1994 4. MAX. ALL MACH. SURFACES 63 5. DRAWING UNITS: U.S. INCH			APPROVED	R.REILLY	27-JUN-2005
			USED ON	MD-416445	
			MATERIAL	STANDARD GRADE BERYLLIUM S-200-F	

FERMI NATIONAL ACCELERATOR LABORATORY
UNITED STATES DEPARTMENT OF ENERGY

MINIBOONE TARGET HALL
HORN MH1 TARGET
MIDDLE TARGET SLUG

SCALE	DRAWING NUMBER	SHEET	REV
2:1	6755.170-MB-416454	1 OF 1	

CREATED WITH : Ideas11NXSeries | GROUP: ACCELERATOR MECH. SUPPT.

REV	DESCRIPTION	DRAWN	DATE
		APPROVED	DATE

R.032 OR UNDERCUT CORNERS

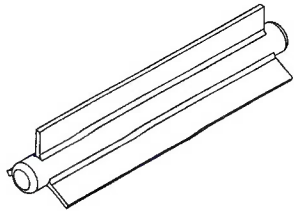

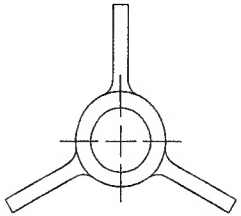

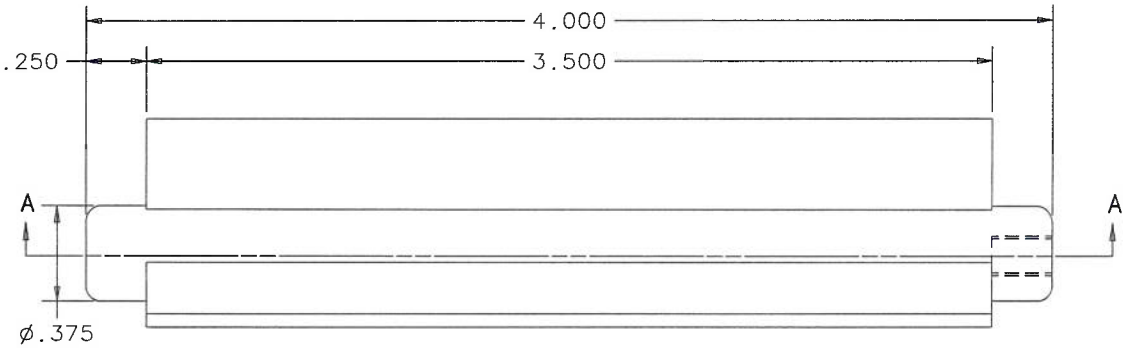

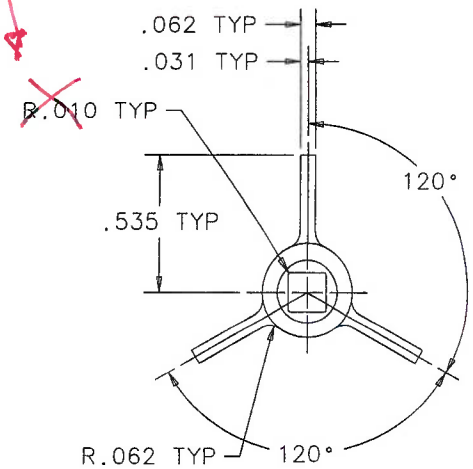

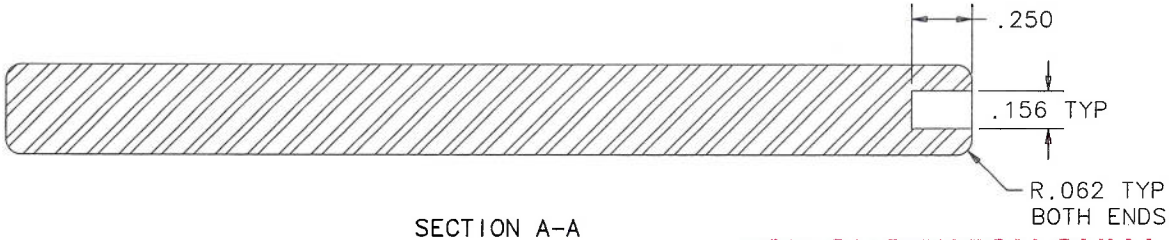

SECTION A-A

FOR QUOTATION ONLY

DATE 11 July 2019

NOTE: MADE FROM LOS ALAMOS PROTOTYPE DRAWING NUMBER 126Y-267800

UNLESS OTHERWISE SPECIFIED			ORIGINATOR	R.REILLY	26-APR-2005
DECIMAL	FRACTIONS	ANGLES	DRAWN	R.STEWART	26-APR-2005
± .005	± 1/32	± .5°	CHECKED	R.REILLY	27-JUN-2005
1. BREAK ALL SHARP EDGES .015 MAX. 2. DO NOT SCALE DRAWING. 3. DIMENSIONS BASED UPON ASME Y14.5M-1994 4. MAX. ALL MACH. SURFACES 63 5. DRAWING UNITS: U.S. INCH			APPROVED	R.REILLY	27-JUN-2005
			USED ON	MD-416445	
			MATERIAL	STANDARD GRADE BERYLLIUM S-200-F	

FERMI NATIONAL ACCELERATOR LABORATORY
UNITED STATES DEPARTMENT OF ENERGY

MINIBOONE TARGET HALL
HORN MH1 TARGET
UPSTREAM TARGET SLUG

SCALE	DRAWING NUMBER	SHEET	REV
2:1	6755.170-MB-416455	1 OF 1	

CREATED WITH : Ideas11NXSeries | GROUP: ACCELERATOR MECH. SUPPT.

REV	DESCRIPTION	DRAWN	DATE
		APPROVED	DATE

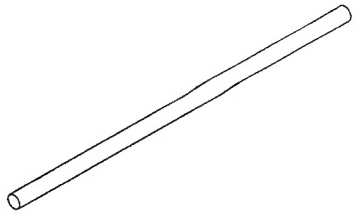

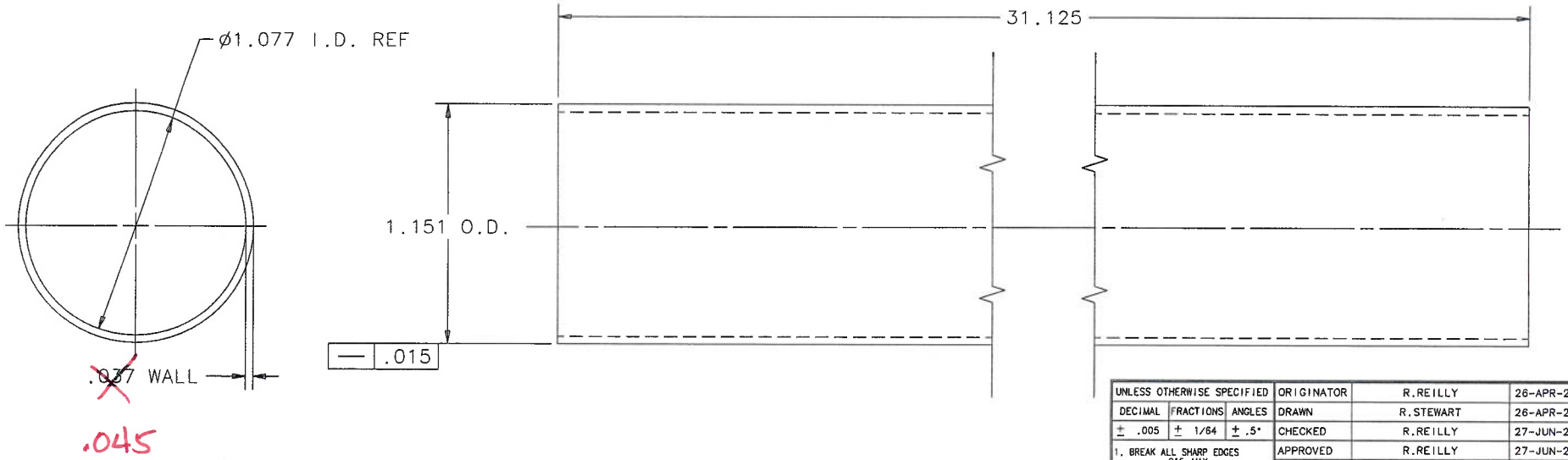

FOR QUOTATION ONLY

DATE 11 July 2019

NOTE: MADE FROM LOS ALAMOS PROTOTYPE DRAWING NUMBER 126Y-267800

UNLESS OTHERWISE SPECIFIED			ORIGINATOR	R.REILLY	26-APR-2005
DECIMAL	FRACTIONS	ANGLES	DRAWN	R.STEWART	26-APR-2005
± .005	± 1/64	± .5°	CHECKED	R.REILLY	27-JUN-2005
1. BREAK ALL SHARP EDGES .015 MAX. 2. DO NOT SCALE DRAWING. 3. DIMENSIONS BASED UPON ASME Y14.5M-1994 4. MAX. ALL MACH. SURFACES 63 √ 5. DRAWING UNITS: U.S. INCH			APPROVED	R.REILLY	27-JUN-2005
			USED ON	MD-416445	
			MATERIAL	STANDARD GRADE BERYLLIUM S-200-F	

FERMI NATIONAL ACCELERATOR LABORATORY
UNITED STATES DEPARTMENT OF ENERGY

MINIBOONE TARGET HALL
HORN MH1 TARGET
TARGET DS OUTER TUBE

SCALE	DRAWING NUMBER	SHEET	REV
2:1	6755.170-MB-416467	1 OF 1	

CREATED WITH : ideas11NXSeries | GROUP: ACCELERATOR MECH. SUPPT.