Design Guides

Engineering Department

Initial Release: November 2012
Revised: March 2015

Fermilab
Facilities Engineering Services Section

Table of Contents

1 Introduction

2 Civil

2.0 Site Work
2.1 Utilities

3 Architectural

4 Structural

5 Mechanical & Plumbing

6 Fire Protection

6.0 Facility Fire Safety
6.1 Fire Extinguishers
6.2 Fire Alarm
6.3 Fire Suppression – Automatic Sprinkler Systems
6.4 Fire Suppression – Special Gaseous Agent & Fixed Spray Water mist, Deluge

7 Electrical

7.0 General
7.1 Cables and Wires
7.2 Grounding
7.3 Lighting
7.4 Low Voltage
7.5 Medium Voltage
7.6 Motors
7.7 Motor Control Centers
7.8 Nominal Voltage and Phase Rotation
7.9 Raceways & Duct Banks
7.10 Receptacles
7.11 Safety Switches
7.12 Switch Boards and Panel Boards
7.13 Transformers
Appendix – Electrical System Naming Convention

8.0 Sustainability

9.0 Accessibility

1.0 Introduction

The Facilities Engineering Services Section (FESS) Design Guide is intended for design professionals to facilitate design and construction of facilities, in accordance with Fermilab Environmental, Safety, and Health (ES&H) Manual Chapter 2001, entitled *Environment, Safety, & Health for Projects*, Fermilab Directorate's Policy No. 8 and the Fermilab's Engineering Manual. The Design Guide was developed in response to issues that have occurred during the design, construction, and operation of Fermilab facilities and is an attempt to avoid historical problems while allowing flexibility for future alterations with a goal of ease of operations and maintenance.

The FESS Design Guide concerns all proposed building, underground enclosures, or facility modifications pertaining to conventional construction design that affects the building components, such as fire protection, mechanical, and electrical systems. In addition, the FESS Design Guide is considered supplementary to the Fermilab ES&H Manual and Work Smart Set and as such, the Design Professional shall consult first the ES&H Manual and Work Smart Set for safety considerations. Other Divisions within the laboratory, such as Accelerator, Computing, Neutrino, Particle Physics, and Technical Divisions have developed their own design guides relating to experimental processes, such as flammable gas systems, control wiring, power to magnets and detectors, harmonics, grounding, vacuum systems, beam tubes, heat transfer in magnets, dewars and cryogenics.

The FESS Design Guide does not replace professional design analysis and judgment. The design professional, including the Architectural/Engineering (A/E) consultants are expected to evaluate specific project requirements and boundary conditions in order to develop a design that meets the technical and quality requirement of the client. This includes independent evaluations and if necessary, alternate design concepts that deviate from the FESS Engineering Design Guide. These evaluations should be conducted early in the design/analysis phase and submitted to the Facilities Engineering Service Section promptly for approval.

It is further intended that these design guides represent a sustainable and life cycle cost-effective application of proven systems that provide functional facilities that satisfy the laboratory's program requirements and are efficient to operate and maintain. Suggestions for improving this design guide should be addressed to the FESS Section Head.

1.1 FESS Design Guide Organization and Use

The FESS Design Guide provides architects, designers, engineers, and technicians with the information for each phase of the civil project, from design through construction, and commissioning. Each design guide is typically outlined: *1.0 Scope (background information)*, *2.0 Design Criteria*, *2.1 Product Materials, and Equipment*, and *3.0 Installation, Fabrication, and Construction* (expectations of execution) phase, and in some cases, design Typical Sketch Details intended to supplement the *design criteria* and *product* information. The applicable codes/standards listed throughout the document implies the current version.

Basis of Design

In general, follow the guidelines below when designing and specifying the following scope of work: excavation, backfilling and compacting, soil erosion and sedimentation control, and landscaping. Unless specifically indicated otherwise, these guidelines are not intended to restrict or replace professional judgment.

1.0 Scope

A. Fermilab is a 6,800 acre national laboratory owned by US Department of Energy. Stockpiling of excavation materials will be coordinated with the Facilities Engineering Services Section – Engineering Department. All stockpile locations shall be included in the Erosion Control Plan.

B. Landscape designs shall incorporate native plant species whenever possible and will not introduce invasive species. For a comprehensive list of prohibited invasive plants and preferred alternatives, see Item 2.1.B.

1.1 Applicable Codes/Standards

A. Illinois Urban Manual

B. Illinois Department of Transportation Standard Specifications for Road and Bridge construction

C. Standard Specifications for Sewer and Water Construction in Illinois

D. NPDES General Stormwater Permit For Construction Activities

E. Occupational Safety and Health Administration (OSHA) 29 CFR Part 1926 including any successor regulations

F. ASTM C136 Standard Test Method for Sieve Analysis of Fine and Corse Aggregates

G. ASTM D698 & D1157 Test Method for Laboratory Compaction Characteristics of Soil Using Standard Effort & Modified Soil

H. ASTM D4253 Maximum Index Density and Unit Weights of Soils Using Vibratory Table

I. Fermilab's ES&H Manual (FESHM)
   - Chapter 8011, Monitoring Wells
   - Chapter 8012, Sedimentation and Erosion Control Planning

1.2 Related Sections

A. Facilities Engineering Services Section Design Guide – Civil Utilities & Electrical Raceway

B. Facilities Engineering Services Section Design Guide – Structural

1.3 Design/Construction Documents

A. Provide standard industry design documents.

B. Civil drawings must be in Fermi Coordinate System. Refer to the CAD/BIM Manual for additional information.

C. Include excavation limits and erosion control on drawings.

D. Site Specific Storm Water Pollution Prevention Plans (SWPPP) for projects in excess of 1.0 acres shall be included with construction documents.

2.0 Design Criteria and Evaluation

A. Do not interrupt existing utilities serving facilities occupied and used by Fermilab or others except when permitted in writing by Fermilab and then only after acceptable temporary utility services have been provided. Provide minimum of forty-eight (48) hour notice prior to enacting an approved temporary interruption.

B. Stockpile satisfactory excavated materials in the location designated on the drawings or as otherwise indicated by Fermilab's Construction Coordinator, until required for backfill or fill.

C. Combustible cooling liquid filled transformers should be provided with containment, conforming to FM Global Data sheet 5-4 and/or NFPA 851.

2.1 Products, Materials, and Equipment

A. Standard industry as delineated in technical specifications.

B. For landscaping designs, use plants listed under the "Preferred Alternatives" in the following table. Species listed in the DO NOT PLANT list are prohibited at Fermilab.

C. Use of Illinois DOT seed mixes for restoration work not in landscaped areas is preferred.

	DO NOT PLANT		PREFERRED ALTERNATIVES	
	Scientific Name	**Common Name**	**Scientific Name**	**Common Name**
TREES	*Acer platanoides*	Norway Maple	*Acer nigrum*	Black Maple
	Ailanthus altissima	Tree Of Heaven	*Celtis occidentalis*	Hackberry
	Catalpa speciosa	Catalpa	*Gymnocladus dioica*	Kentucky Coffee
	Morus alba	White Mulberry	*Morus rubra*	Red Mulberry
	Paulownia tomentosa	Princess Tree	*Carpinus caroliniana*	Musclewood
	Populus alba	White Poplar	*Populus grandidentata*	Big-tooth Aspen
	Populus nigra	Lombardy Poplar	*Quercus rubra*	Northern Red Oak
	Pyrus calleryana	Callery Pear (Bradford Pear)	*Ostrya virginiana*	Ironwood
	Quercus palustris	Pin Oak	*Quercus ellipsoidalis*	Hill's Oak
	Robinia pseudoacacia	Black Locust	*Carya ovata*	Shagbark Hickory
	Ulmus pumila	Siberian Elm	*Quercus alba*	White Oak
SHRUBS	*Berberis* spp.	Japanese Barberry	*Ribes missouriense*	Wild Gooseberry
	Elaeagnus spp.	Autumn Olive	*Physocarpus oppulifolius*	Ninebark
	Euonymous alatus	Burning Bush	*Euonymous atropurpureus*	Eastern Wahoo
	Euonymous europaeus	Spindletree	*Spirea alba*	Meadowsweet
	Hibiscus syriacus	Rose of Sharon	*Amorpha canescens*	Leadplant
	Ligustrum spp.	Privet	*Staphylea trifolia*	Bladdernut
	Lonicera spp.	Bush Honeysuckle	*Corylus americana*	Hazelnut
	Malus baccata	Siberian Crab	*Ceanothus americanus*	New Jersey Tea
	Prunus mahaleb	Mahaleb Cherry	*Rosa blanda*	Early Wild Rose
	Prunus padus	Wild Bird Cherry	*Cornus obliqua*	Blue-fruited Dogwood
	Pyrus aucuparia	European Mountain Ash	*Ptelea trifoliata*	Wafer Ash
	Rhamnus cathartica	Common Buckthorn	*Prunus americana*	American Plum

	DO NOT PLANT		PREFERRED ALTERNATIVES	
	Scientific Name	**Common Name**	**Scientific Name**	**Common Name**
	Rhamnus frangula	Glossy Buckthorn	*Amelanchier laevis*	Serviceberry
	Rosa multiflora	Multiflora Rose	*Rosa setigerea*	Illinois Rose
	Salix caprea	Pussy Willow Cultivars	*Salix humilis*	Prairie Willow
	Viburnum lantana	Wayfaring Tree	*Viburnum rafinesqueanum*	Black Haw
	Viburnum opulus	European Highbush Cranberry	*Viburnum lentago*	Nannyberry
			Cephalanthus occidentalis	Buttonbush
			Rosa carolina	Prairie Rose
VINES	*Campsis radicans*	Trumpet Vine	*Menispermum canadense*	Moonseed Vine
	Celastrus orbiculatus	Ornamental Bittersweet	*Apios americana*	Ground Nut
	Dioscorea opposita	Chinese Yam	*Dioscorea villosa*	Wild Yam
	Humulus japonicus	Japanese Hops	*Humulus lupulus*	Hops
	Lonicera japonica	Japanese Honeysuckle	*Lonicera prolifera*	Yellow Honeysuckle
	Vincetoxicum nigrum	Black Swallow-wort	*Sicyos angulatus*	Bur Cucumber
	Wisteria spp.	Chinese Wisteria	*Clematis virginiana*	Virgin's Bower
			Lonicera dioica	Red Honeysuckle
			Parthenocissus quinquefolia	Virginia Creeper
GRASSES & SEDGES	*Bromus inermis*	Hungarian Brome	*Elymus villosus*	Silky Wild Rye
	Microstegium vimineum	Japanese Stiltgrass	*Cinna arundinacea*	Common Wood Reed
	Miscanthus spp.	Silvergrass	*Schizachyrium scoparium*	Little Bluestem
	Phalaris arundinacea	Reed Canary Grass	*Calamagrostis canadensis*	Blue Joint Grass
	Phragmites australis	Giant Reed Grass	*Spartina pectinata*	Prairie Cord Grass
			Bouteloua curtipendula	Side Oats Grama
			Carex bicknellii	Copper-shouldered Oval Sedge
			Carex grayi	Gray's Sedge
			Carex jamesii	Grass Sedge
			Carex pensylvanica	Common Oak Sedge
			Sporobolus heterolepis	Dropseed
GROUND-COVERS	*Euonymous fortunei*	Wintercreeper	*Asarum canadense*	Wild Ginger
	Ficaria verna	Lesser Celandine	*Antennaria plantaginifolia*	Pussy Toes
	Hedera helix	English Ivy	*Athyrium filix-femina*	Lady Fern
	Vinca spp.	Periwinkle	*Anemone canadensis*	Meadow Anemone
HERBACEOUS	*Baptisia australis*	Wild Blue Indigo	*Baptisia leucantha*	White Wild Indigo
	Campanula rapunculoides	European Bellflower	*Eupatorium purpureum*	Purple Joe Pye Weed
	Euphorbia cyparissias	Cypress Spurge	*Zizia aurea*	Golden Alexander
	Euphorbia esula	Leafy Spurge	*Euphorbia corollata*	Flowering Spurge
	Euphorbia marginata	Snow on the Mountain	*Aquilegia canadensis*	Wild Columbine
	Hesperis matronalis	Dame's Rocket	*Geranium maculatum*	Wild Geranium
	Lespedeza cuneata	Chinese Lespedeza	*Lespedeza capitata*	Round-headed Bush Clover
	Lotus corniculatus	Bird's Foot Trefoil	*Lysimachia quadriflora*	Whorled Loosestrife
	Lythrum salicaria	Purple Loosestrife	*Eryngium yuccifolium*	Rattlesnake Master
	Melilotus spp.	Sweet Clover	*Helianthus mollis*	Downy Sunflower
	Muscari spp.	Grape Hyacinth	*Polemonium repens*	Jacob's Ladder
	Phlox maculata	Sweet William Phlox	*Echinacea pallida*	Pale Purple Coneflower

	DO NOT PLANT		PREFERRED ALTERNATIVES	
	Scientific Name	**Common Name**	**Scientific Name**	**Common Name**
	Scilla siberica	Siberian Squill	*Phlox divericata*	Woodland Phlox
	Securigera varia	Crown Vetch	*Vicia americana*	American Vetch
	Tanacetum vulgare	Garden Tansy	*Coreopsis palmata*	Prairie Coreopsis
	Valeriana officinalis	Garden Valerian	*Parthenium integrifolium*	Wild Quinine
	Vicia villosa	Hairy Vetch	*Dalea purpurea*	Purple Prairie Clover
AQUATICS	*Butomus umbellatus*	Flowering Rush	*Sparganium eurycarpum*	Common Bur Reed
	Egeria densa	Brazilian Waterweed	*Asclepias incarnata*	Swamp Milkweed
	Eichhornia crassipes	Water Hyacinth	*Nuphar advena*	Yellow Pond Lily
	Elodea spp.	Brazilian Elodea	*Sagitarria latifolia*	Arrowhead Leaf
	Hydrilla verticillata	Hydrilla	*Nelumbo lutea*	American Lotus
	Hydrocharis morus-ranae	European Frogbit	*Scirpus atrovirens*	Dark Green Bulrush
	Iris pseudacorus	Yellow Flag Iris	*Iris virginica*	Blue Flag Iris
	Myriophyllum aquaticum	Parrot Feather	*Juncus torreyi*	Torrey's Rush
	Nymphoides peltata	Yellow Floating Heart	*Acorus calamus*	Sweet Flag
	Pistia stratiotes	Water Lettuce	*Pontederia cordata*	Pickerel Weed

3.0 Installation, Fabrication, and Construction

A. Standard industry as delineated in technical specifications.

3.1 Typical Sketch Details

CS-1 SILT FENCE
CS-2 DITCH & SWALE
CS-3 ROCK CHECK DAM
CS-4 SIDEWALK
CS-5 HARDSTAND
CS-6 BARRIER CURB
CS-7 DETAIL AT CULVERT
CS-8 TRANSFORMER PAD WITH CONTAINMENT
CS-9 UTILITY PAD

Version Number	Date	Author	Change Summary
0	11/26/2012	C. Federowicz	Initial Release
1	03/01/2015	J. Niehoff	Revised Section 1.3 and Sketch CS-1 Silt Fence.
2	01/30/2016	C. Federowicz	Minor formatting changes, added SWPPP
3	04/12/2016	J. Hunt	Added DO NOT PLANT List

FERMILAB ENGINEERING NOTE	SECTION	PROJECT	SERIAL/CATEGORY	PAGE
	FESS/Eng	N/A		CS-1

SUBJECT	NAME	
SILT FENCE **CIVIL DESIGN GUIDE**	**J. NIEHOFF**	
	DATE **11-26-2012**	REVISION DATE **2-27-2015**

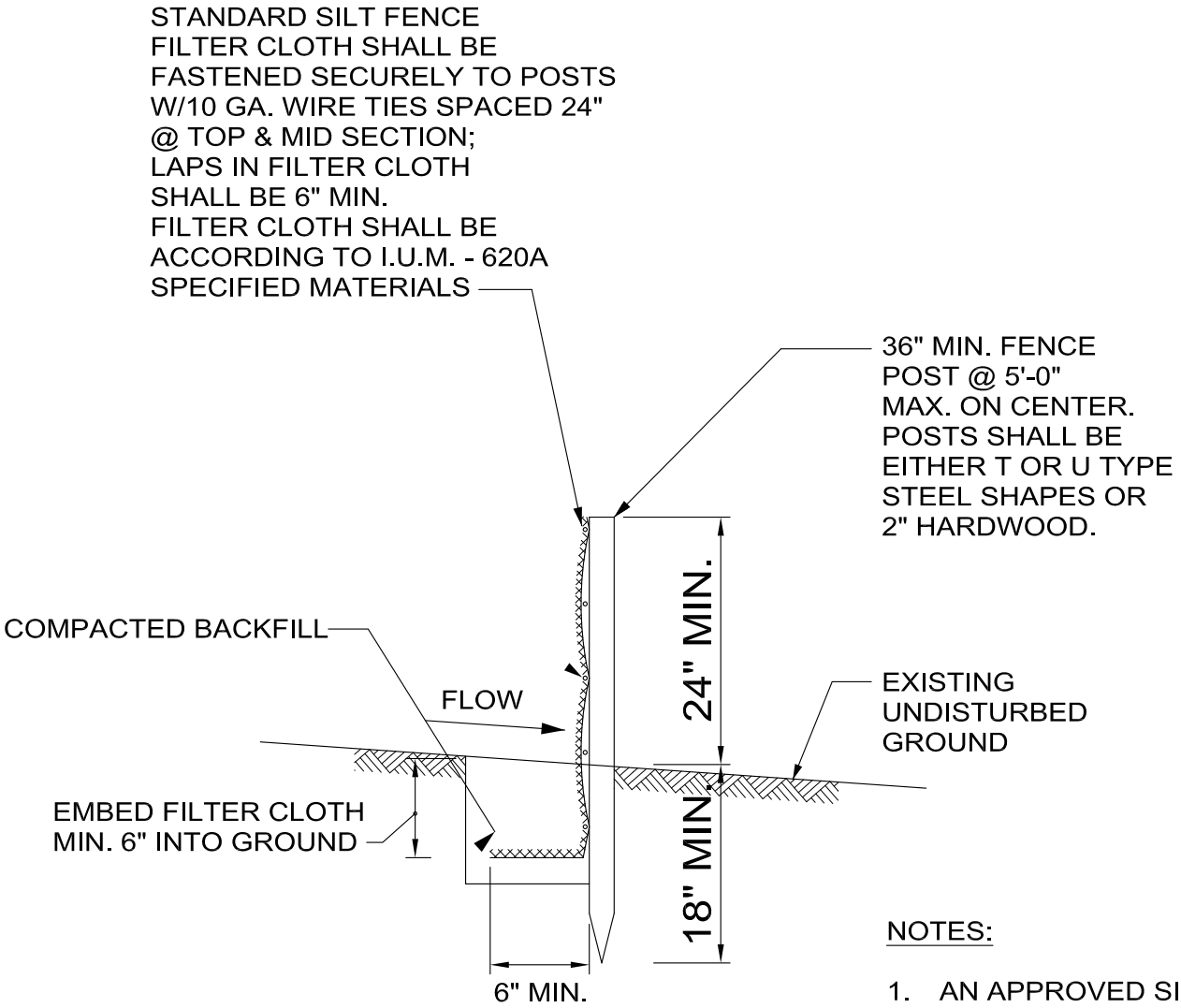

NOTES:

1. AN APPROVED SILT FENCE IS GEOFAB, ENVIROFENCE.
2. REPAIR OR REPLACE SILT FENCE WHEN "BULGES" DEVELOP IN FENCE.
3. FENCE POSTS SHALL BE STANDARD STEEL POST OR WOOD POST WITH A MIN. CROSS-SECTIONAL AREA OF 3.0 sq. in.

FERMILAB ENGINEERING NOTE	SECTION	PROJECT	SERIAL/CATEGORY	PAGE
	FESS/Eng	N/A		CS-2

SUBJECT	NAME	
TYPICAL DITCH AND SWALE CIVIL DESIGN GUIDE	**J. NIEHOFF**	
	DATE **11-26-2012**	REVISION DATE

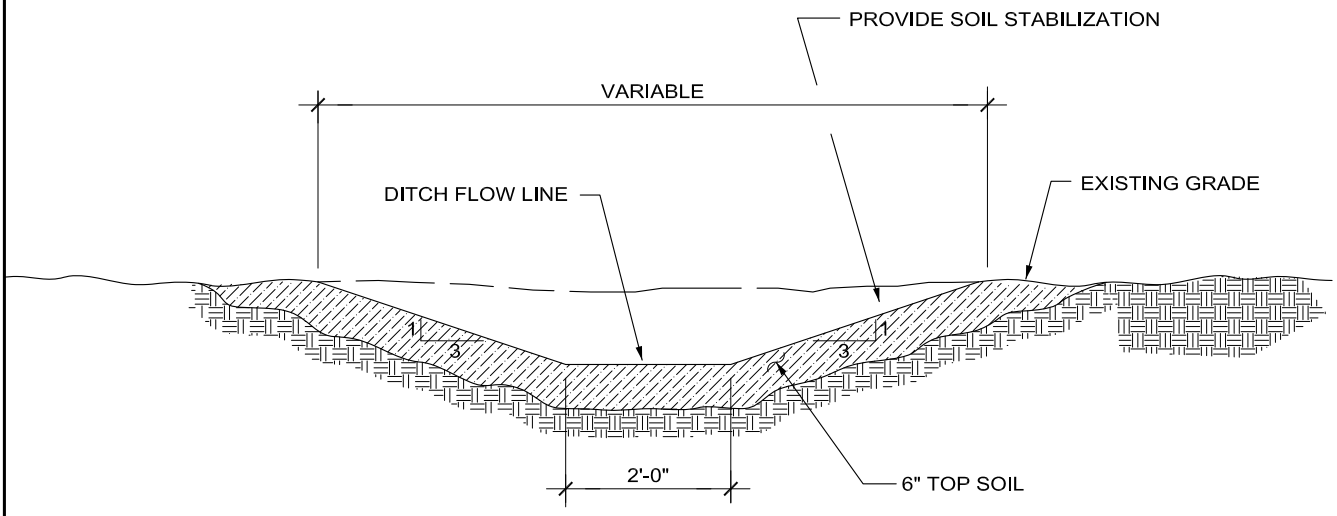

TYPICAL DITCH SECTION (A)

NOT TO SCALE

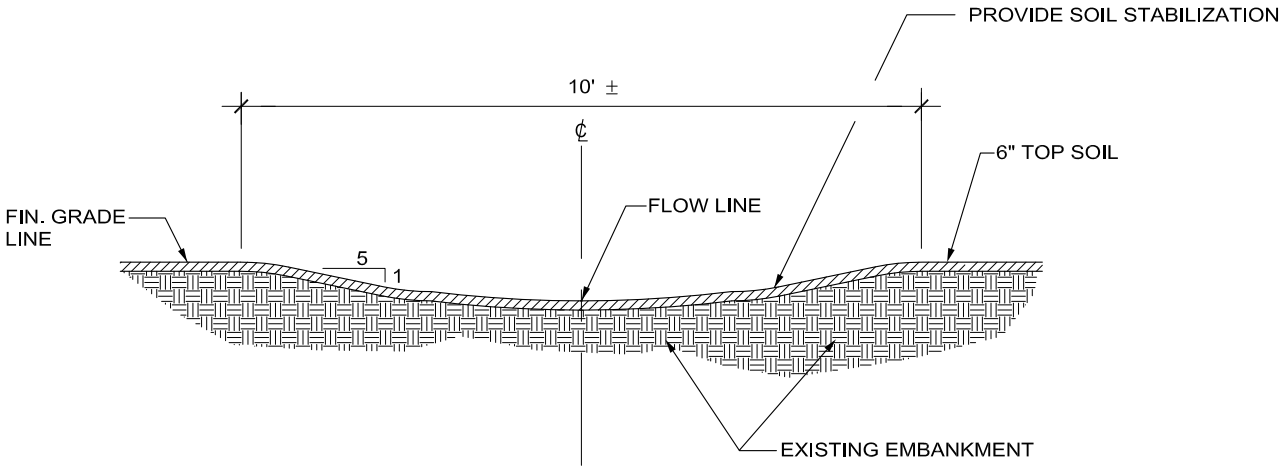

TYPICAL SWALE DETAIL (B)

NOT TO SCALE

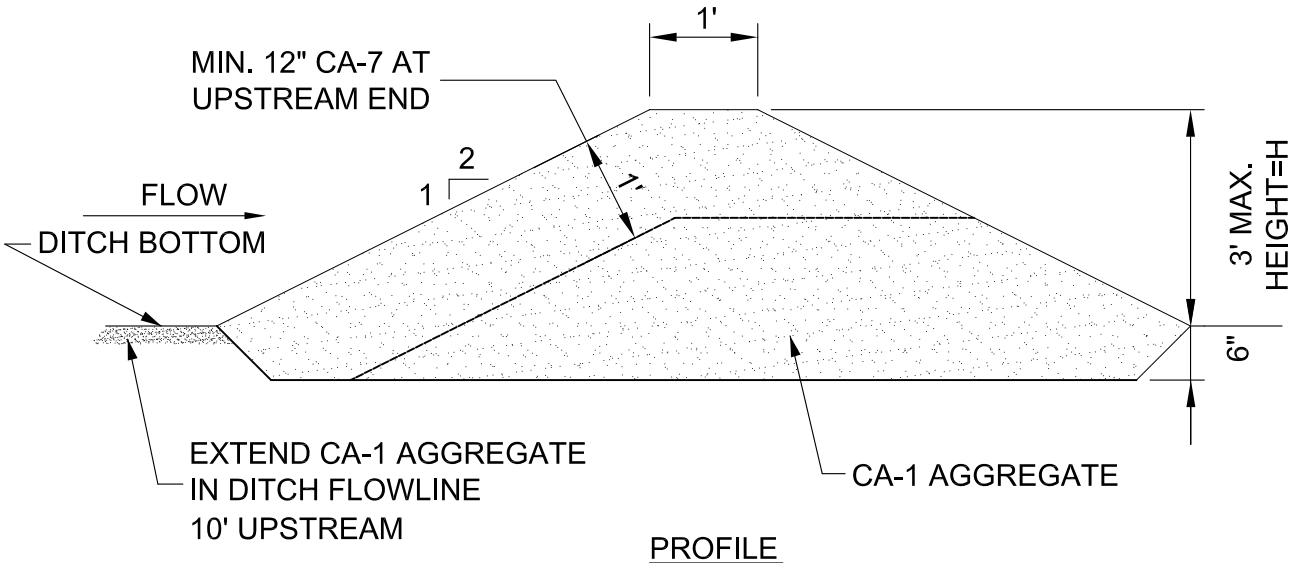

PROFILE

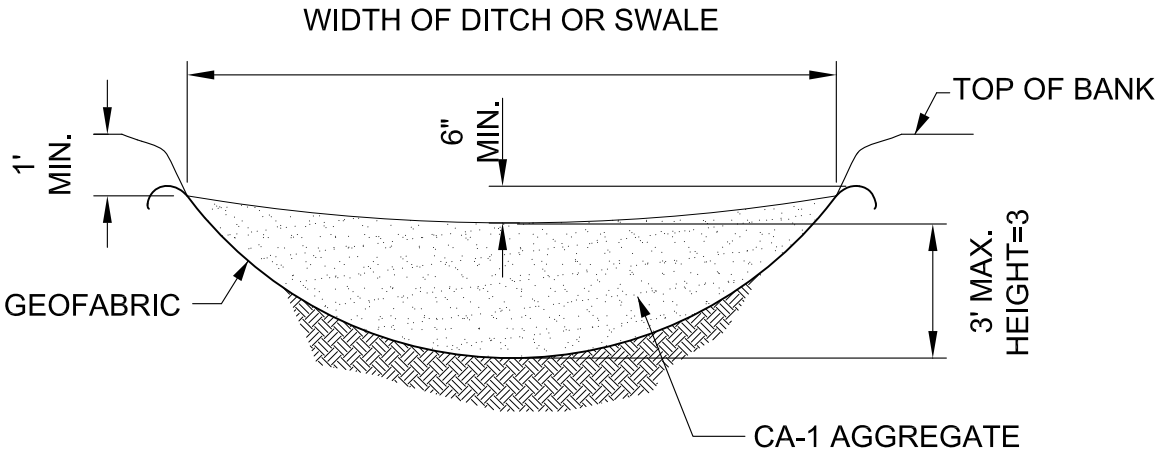

CROSS SECTION

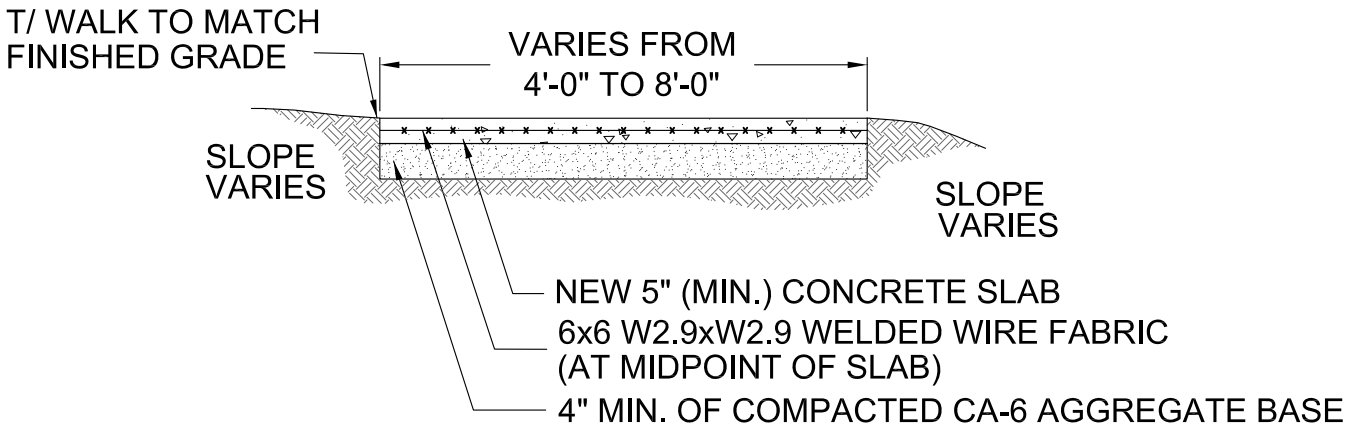

NOTE: PLACE ALL CONCRETE IN ACCORDANCE WITH APPLICABLE A.C.I. CODES AND RECOMMENDATIONS

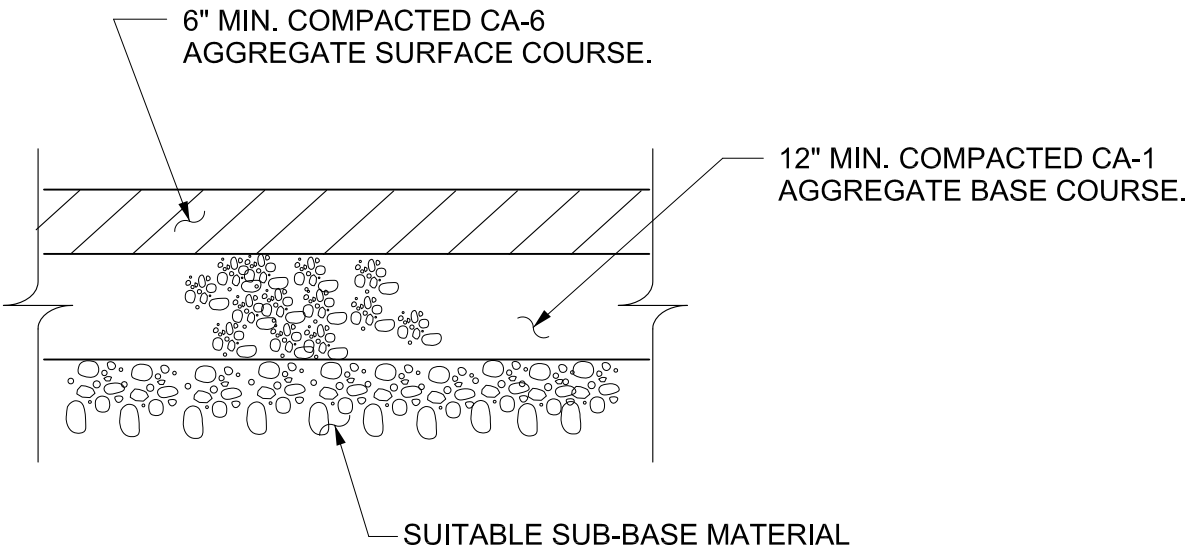
6" MIN. COMPACTED CA-6
AGGREGATE SURFACE COURSE.
12" MIN. COMPACTED CA-1
AGGREGATE BASE COURSE.
SUITABLE SUB-BASE MATERIAL

FERMILAB ENGINEERING NOTE	SECTION	PROJECT	SERIAL/CATEGORY	PAGE
	FESS/Eng	N/A		CS-6

SUBJECT	NAME	
BARRIER CURB CIVIL DESIGN GUIDE	**J. NIEHOFF**	
	DATE **11-26-2012**	REVISION DATE

NOTE: TERMINATE CURB ENDS AT 45° ANGLE TO FACILITATE SNOW PLOW

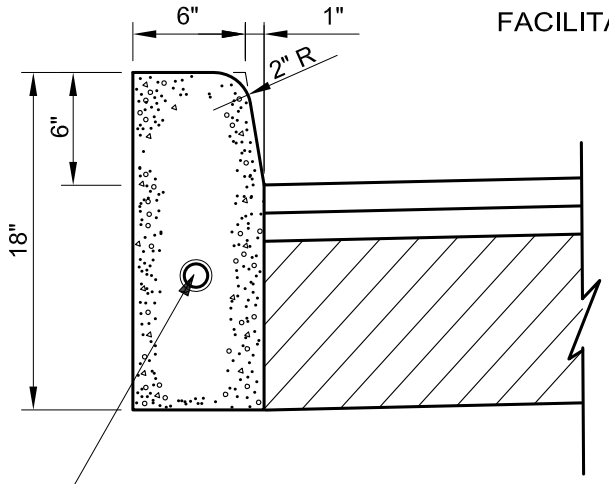

1-1/4" DIA. X 18" COATED SMOOTH DOWEL BAR W/FITTED END CAP AT ALL EXPANSION JOINTS. MINIMUM 1" THICK EXPANSION JOINTS TO BE PLACED AT ALL SHORT RADIUS LOCATIONS AND AT CONSTRUCTION JOINTS.

CONTRACTION JOINTS TO BE PLACED BETWEEN EXPANSION JOINTS SHALL NOT EXCEED 25 FT. SPACING

FERMILAB ENGINEERING NOTE	SECTION	PROJECT	SERIAL/CATEGORY	PAGE
	FESS/Eng	N/A		CS-7

SUBJECT	NAME	
TYPICAL DETAIL AT CULVERT CIVIL DESIGN GUIDE	**J. NIEHOFF**	
	DATE **11-26-2012**	REVISION DATE

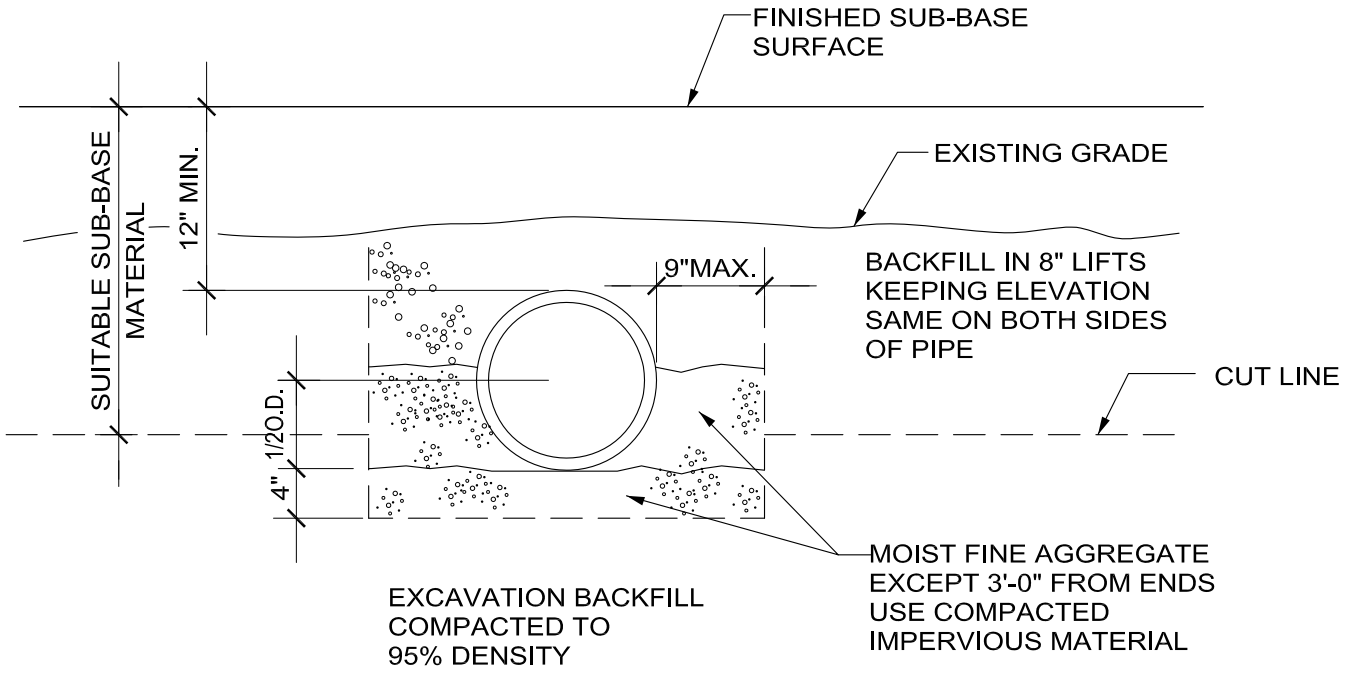

SECTION

FERMILAB ENGINEERING NOTE	SECTION	PROJECT	SERIAL/CATEGORY	PAGE
	FESS/Eng	N/A		CS-8

SUBJECT	NAME	
TRANSFORMER PAD WITH CONTAINMENT CIVIL DESIGN DRAWINGS	J. NIEHOFF	
	DATE 11-26-2012	REVISION DATE

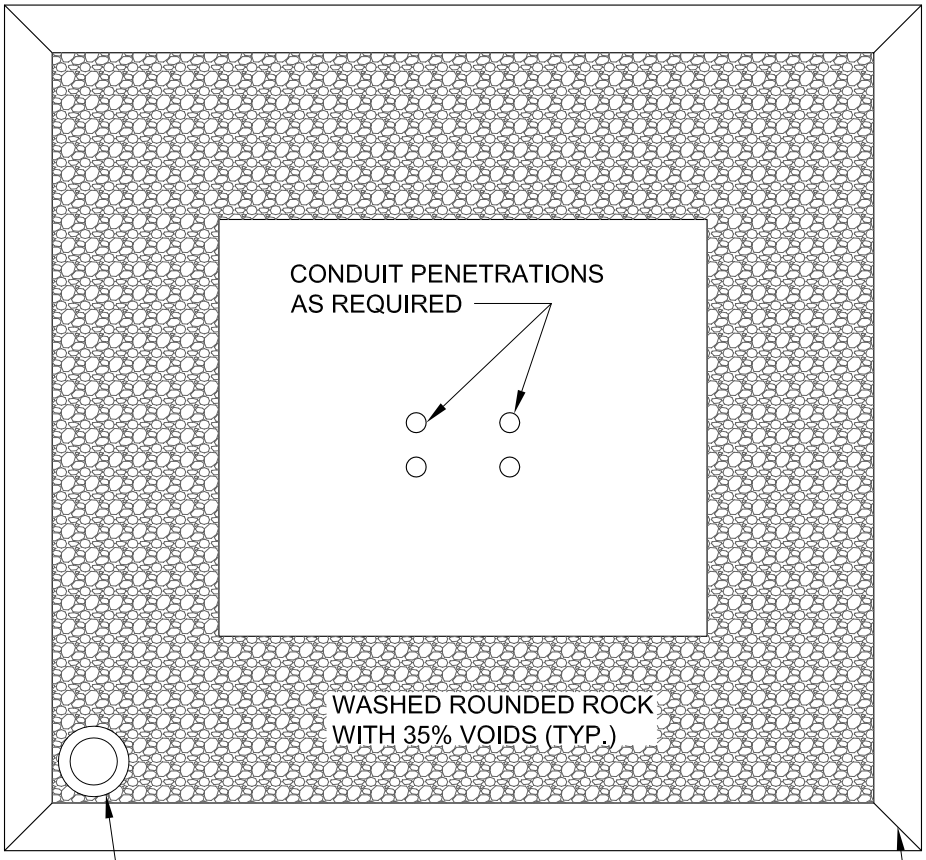

PLAN

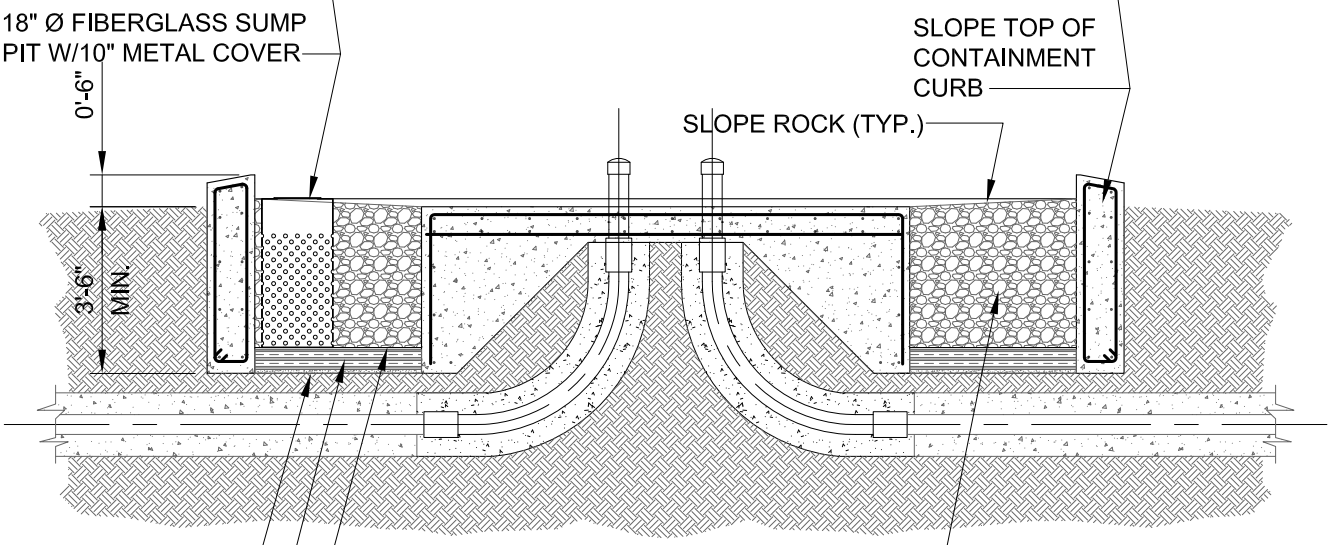

SECTION

FERMILAB ENGINEERING NOTE	SECTION	PROJECT	SERIAL/CATEGORY	PAGE
	FESS/Eng	N/A		CS-9

SUBJECT

UTILITY PAD - SAMPLE GENERATOR PAD
CIVIL DESIGN GUIDE

NAME: **J. NIEHOFF**

DATE: **11-26-2012**

REVISION DATE:

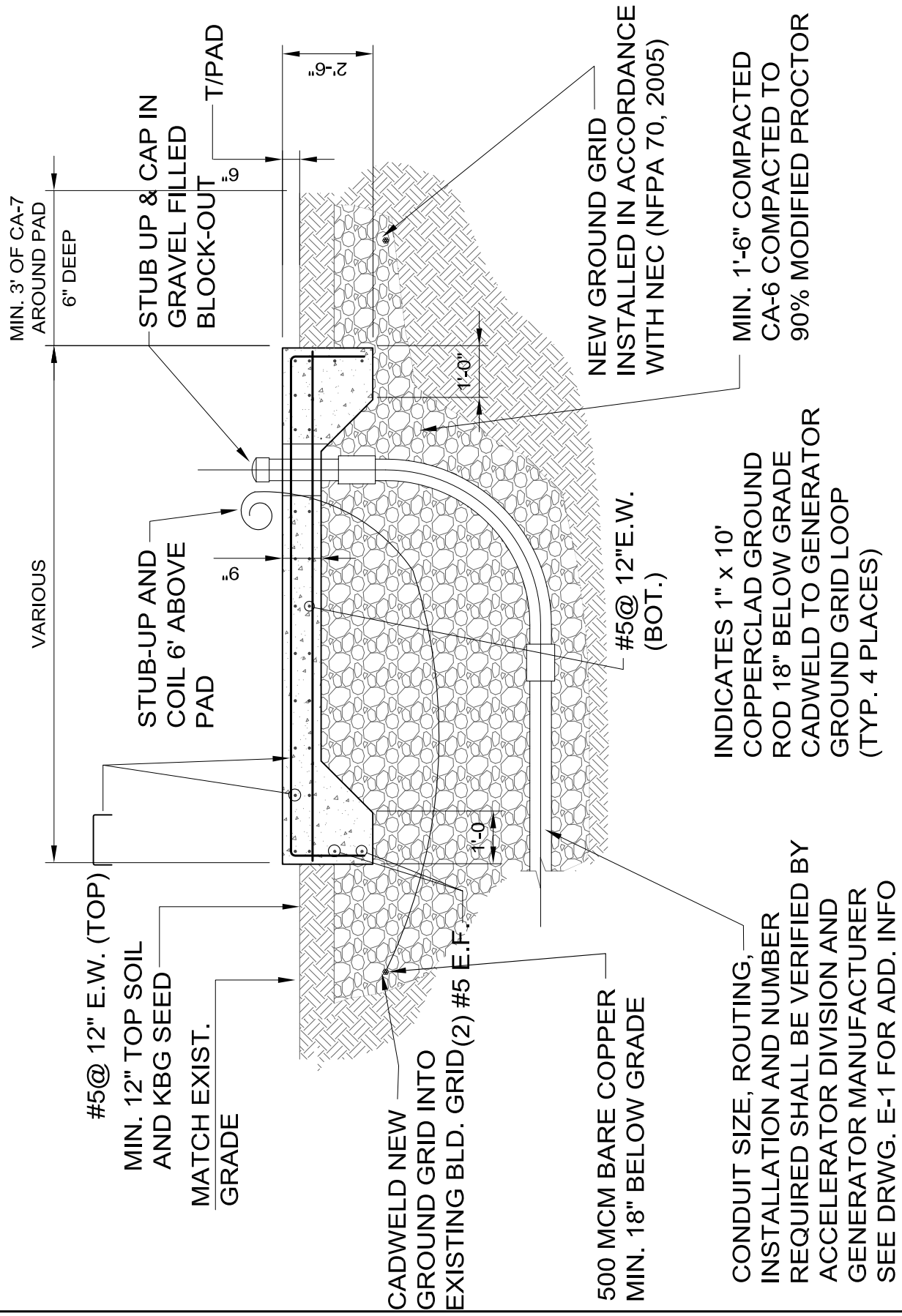

Basis of Design

This section applies to underground utility distribution systems.

1.0 Scope

A. City of Warrenville supplies the potable water for Fermilab's entire site. There are two 8-inch meters located in concrete vaults located on the East side of the Fermilab's Village area. From there, Fermilab owns the entire potable domestic water system (DWS) network piping on site. Fermilab's DWS is considered an exempt community public water supply based on the Illinois Compiled Statues, Environmental Safety (415 ILGS 45/9.1) Public Water Supply Operations Act, for further information reference FESS Engineering Project No. 3-5-167.

B. Fermilab's sanitary sewage system is connected to City of Batavia (west main site) and City of Warrenville (village site).

C. Industrial Cooling Water (ICW) system provides cooling and fire protection water throughout the main site of Fermilab. The ICW system configuration is linear and it's primarily supplied from a single point, Casey's Pump house and reservoir. The back-up in emergency situation, is the Surface water from Main Ring Lake via C-4 Pump house.

D. NiCOR Energy supplies natural gas to the main site via a distribution station located on West near Giese Road and East Village are, old Wilson Road. Fermilab owns all the natural gas piping supplied from these locations.

1.1 Applicable Codes/Standards

A. ASME B31.8 Gas Transmission and Distribution Piping Systems

B. ANSI/AWWA C906 – Standard for Polyethylene (PE) Pressure Pipe and Fittings, 4-inch through 63-inch, for Water Distribution

C. ANIS/AWWA C901 – Standard for Polyethylene (PE) Pressure Pipe and Tubing, ½-inch through 3-inch for Water Service.

D. ASTM A53 Standard Specification for Pipe, Steel, Black and Hot-Dipped Zinc Coated, Welded and Seamless.

E. ASTM A120 Standard Specification for Pipe, Steel, Black and Hot-Dipped Zinc Coated, Welded and Seamless, for ordinary uses.

F. ASTM D618 Standard Specification for Polyethylene Plastics Molding and Extrusion Materials.

G. ASTM D3139 Specification for Joints for Plastic Pressure Pipes Using Flexible Elastomeric Seals

H. ASTM D3261 Standard Specification for Butt Heat Fusion Polyethylene (PE) Plastic Fittings for Polyethylene (PE) Plastic Pipe and Tubing.

I. ASTM D3350 Standard Specification for Polyethylene Plastics Pipe and Fittings Materials

J. ASTM F477 Specification for Elastomeric Seals (Gaskets) for Joining Plastic Pipe

K. ASTM F714 Standard Specification for Polyethylene (PE) Plastic Pipe (SIDR-PR) Based on Outside Diameter

L. Illinois Department of Transportation (IDOT):

M. Standard Specifications for Water & Sewer Main Construction in Illinois
N. Occupational Safety and Health Administration (OSHA): Current OSHA Occupational Safety and Health Standards - Excavations, 29 CFR Part 1926, including any successor regulations.
O. ASME – Boiler and Pressure Vessel Code.
P. City of Batavia and City of Warrenville Local Ordinances
Q. Illinois Plumbing Code
R. Valves should conform to NPFA 24, Standard for the Installation of Private Fire Service Mains and Hydrants
S. Fermilab's ES&H Manual (FESHM)
   - Chapter 8025, Wastewater Discharge to Sanitary Sewers
   - Chapter 8050, Domestic Water Protection

1.2 Related Sections

A. Facilities Engineering Services Section Design Guide – Fire Protection - Facility Safety
B. Facilities Engineering Services Section Design Guide – Electrical Raceways & Duct Banks

1.3 Design/Construction Documents

A. Provide standard industry documents.
B. Civil drawings must be in Fermi Coordinates system, reference the CAD/BIM Manual.

2.0 Design Criteria and Evaluation

A. Provide engineering calculations used to size the piping.
B. Control valves should be provided on all three sides of branch tees.
C. Bury gas piping with 30-inches of cover from finish grade to top of pipe. Refer to the section on earthwork, backfill requirements.
D. Programming Phase: Statement of design intent.
E. Design Development Phase: Drawings showing existing utilities and narrative material and system description.
F. Construction Document Phase: Complete plans and specifications.
   - Include pipe sizes, points of connection, valve details, supports, meters, trench and bedding details, connection and joint details, vault plans and sections, building penetration details, and invert elevations at building connections.
   - Include plans showing all existing underground enclosures, tunnels, and utilities.
   - Tracing wiring shall have quality assurance test, that is, a continuity test documented that the tracer wire is adequately installed properly at the completion of the backfilling of the utility trech.

2.1 Products, Materials, and Equipment

2.1.1 Natural Gas

A. All products, materials, and equipment shall conform to ASME B31.8 Standard.

B. Pipe and Fittings: Natural Gas piping and fittings shall be FM approved and shall be HDPE YELLOWSTRIPE PE 3408 DSDR 11, or yellow print markings, or approved equal.

C. Joints: Heat fusion joints shall be butt, socket and saddle fusion joints made by qualified and approved personnel using procedures un accordance with CFR 49, part 192

D. Valves: AGA or API listed polyethylene ball valve, with 2-inch square operator nut, ¼ turn type. Valve Boxes: Cast iron, two-section box. Include top section with cover and "GAS" lettering.

***2.1.2 Domestic Water (DWS)*:**

A. Pipe and Fittings: DWS piping shall be NSF approved and shall be HDPE BLUESTRIPE PE 3408 or blue print markings, or approved equal. Refer to drawings for Dimension Ratio (DR) requirements. Polyethylene fittings shall be injection molded butt type, ASTM D3261 fitting shall be of the same manufacturer, rating and of the same resin as the pipe material and shall conform to AWWA C906. PVC pipe shall be NSF approved and meet AWWA C900 Specifications. Minimum Standard Dimension Ratio (SDR) shall be 18 unless specified differently on plans or technical specifications. Ductile Iron Pipe for DWS service (used only where noted on the drawings) Pipe: Mechanical joint ductile-iron pipe, Class 52, conforming to AWWA C151 (ANSI A21.51) with cement lining conforming to AWWA C104 (ANSI A21.4). DWS system piping shall be provided with tie-rods or mega-lug and thrust blocks.

B. Joints: Joints - Pipe shall be of solid wall construction and shall have DIPS (Ductile Iron Pipe Size) outside dimensions. Provisions must be made for expansion and contraction at each joint with an elastomeric ring. The bell shall consist of an integral wall section with an elastomeric ring, which meets the requirements of ASTM F477, Specification for Elastomeric Seals (Gaskets) for Joining Plastic Pipe.

C. Valves: Resilient wedge, iron body gate valve, counter clockwise opening, non-rising stem, inside screw for underground. Gate valves shall have 175-lb. rating with mechanical joint connections and flanges suitable for use with yard box or indicator post. Waterous Co. Series 2500 or Fermilab approved equal. Valves for DWS line shall comply with NFPA 24, as listed by Underwriters Laboratories and approved by Factory Mutual for fire protection. Valve Boxes: Cast iron, two-section box. Include top section with cover and "DWS" or "WATER" lettering.

D. Transition Fittings: For transition from ductile iron pipe to polyethylene pipe, appropriate flanged transition fittings or self-restrained mechanical joint adapters and gaskets approved by the manufacturer of the polyethylene pipe shall be used. FM approved flange adapters shall be used to connect DWS polyethylene piping to ductile iron. Stainless steel inserts are required to be used to stiffen of polyethylene pipe at all mechanical joints.

E. Fire & Flushing Hydrants: For Village are, reference the ICW Fire hydrant below. For the main site, dry barrel, post type hydrant valve with one 2-1/2 outlet port. Design Team to consult with FESS Engineering Department for type and manufacturer(s).

2.1.3 Industrial Cooling Water (ICW)

A. Pipe and Fittings: Shall be HDPE REDSTRIPE PE 3408, or red print markings, or FM approved equal with a wall thickness designed to meet Class 150 service pressure ratings. Polyethylene fittings shall be injection molded butt type, ASTM D3261 fitting shall be of the same manufacturer, rating and of the same resin as the pipe material. PVC pipe shall be UL and/or FM Approved for Fire Protection. Distribution PVC pipe (4-inch through 12-inch) should be FM Approved. All PVC pipe shall meet AWWA C900/C905 Specifications. Minimum Standard Dimension Ration (SDR) shall be 18 unless agreed upon by Engineering Project Team. Ductile Iron Pipe for ICW service (used only where noted on the drawings) Pipe: Mechanical joint ductile-iron pipe, Class 52, conforming to AWWA C151 (ANSI A21.51) with cement lining conforming to AWWA C104 (ANSI A21.4). ICW system piping shall be provided with tie-rods or mega-lug and thrust blocks with the exception of straight runs. In those cases, push on joints are acceptable.

B. Joints: Joints - Pipe shall be of solid wall construction and shall have DIPS (Ductile Iron Pipe Size) outside dimensions. Provisions must be made for expansion and contraction at each joint with an elastomeric ring. The bell shall consist of an integral wall section with an elastomeric ring, which meets the requirements of ASTM F477, Specification for Elastomeric Seals (Gaskets) for Joining Plastic Pipe.

C. Valves: Typically, ICW valves should be Post Indicator type (PIV). Resilient wedge, iron body gate valve, counter clockwise opening, non-rising stem, inside screw for underground. Gate valves shall have 175-lb. rating with mechanical joint connections and flanges suitable for use with yard box or indicator post. Waterous Co. Series 2500 or Fermilab approved equal. Valves for ICW line shall comply with NFPA 24, as listed by Underwriters Laboratories and approved by Factory Mutual for fire protection. Valve Boxes: Cast iron, two-section box. Include top section with cover and “ICW” lettering. Indicator Posts, vertical type cast iron body with operation wrench and adjustable cast iron barrel, Waterous Post Indicator Model IP-71, or Fermilab approved equal.

D. Transition Fittings: For transition from ductile iron pipe to polyethylene pipe, appropriate flanged transition fittings or self-restrained mechanical joint adapters and gaskets approved by the manufacturer of the polyethylene pipe shall be used. FM approved flange adapters shall be used to connect ICW polyethylene piping to ductile iron. Stainless steel inserts are required to be used to stiffen of polyethylene pipe at all mechanical joints.

E. Fire Hydrants: Dry Barrel, American Flow Control – Waterous 5-1/4-inch Pacer, CI, MJ. Hydrants shall be field painted in accordance with NFPA 291 using a barrier coat of rust inhibitive universal alkyd primer over shop applied primer and an aliphatic polyurethane finish coat. Paint shall be applied according to manufacturer's instructions.

2.1.4 Sanitary

A. Gravity Pipe and Fittings: Shall be PVC, SDR 26 conforming to the requirements of ASTM-D2241. Certain Teed PVC restrained joint C900/905 pipe with a minimum Standard Dimension Ratio (SDR) of 18 suitable for both gravity and force main applications. Flexible rubber gasket assemblies shall be provided at sanitary sewer-

manhole connections. Gaskets shall be connected to the pipe with stainless steel clamps.

B. Force Pipe and Fittings: Shall be HDPE GREENSTRIPE PE 3408 or green print markings, approved equal with a wall thickness designed to meet Class 150 service pressure ratings. Polyethylene fittings shall be injection molded butt type, ASTM D3261 fitting shall be of the same manufacturer, rating and of the same resin as the pipe material.

C. Sanitary Manholes: Shall be bituminous-coated pre-cast reinforced concrete sections conforming to the requirements of ASTM C-478. Minimum wall thickness of the sections shall be 5-inches and the access opening shall be minimum 24-inches, polypropylene-coated steps shall be cast into the walls. Frames and covers shall be cast gray iron as manufactured by Neenah or Fermilab approved equal and cover stamped "SEWER".

2.1.5 Sanitary Sewage Pump (Lift Station)

A. Sewage Pump Basin: Shall be factory fabricated, watertight, fiberglass with sidewall openings for pip connections and reinforcement for pump mounting plates, fittings, guide-rails supports, and accessories. Aluminum cover opening shall have gaskets, seals, and bushing with aluminum access, i.e., ladder(s), to pumps, pump shafts, control rods, discharge piping vent connectors, and power cables.

B. Packaged submersible Sewage Pumps: Pump and controls shall be manufactured by Weil Pump or Fermilab approved equal.

2.1.6 Tracer Wire, Markings, and Cathodic Protection:

A. Tracer wire shall be installed on all, DWS, ICW, Gas, Communication (Fiber-Optic), and Sanitary Force Mains

B. Tracer Wire: Shall be #12 AWG solid steel core with 45-mil yellow polyethylene jacketing. Wire shall have 30V rating and shall be equal to #12 CCS Extra High Strength hard drawn 1150 lbs as manufactured by Copperhead Industries.

C. Tracer Box: shall be the Snake Pit magnetized tracer box as manufactured by Copperhead Industrials. Box shall be Roadway Style with 5-inches top flange and shall be heavy duty traffic rated.

D. Cathodic Protection with passive anodes for metallic piping, valves, and hardware. Stainless steel bolts and fasteners on all mechanical type joints/connectors.

E. Warning Tape: Warning tape shall be yellow background with black lettering. Tape shall be made from 4-mil thick 6-inches wide polyethylene and shall read "CAUTION BURIED PIPELINE BELOW".

3.0 Installation, Fabrication, and Construction

A. Fabricate, install, and inspect all gas distribution and service piping in accordance with ASME B31.8. Include an air test at 90-psi for 4-hours, subcontractor to submit testing

documentation. In addition, the HDPE Natural Gas shall be installed in accordance with NFPA 54.

B. Installation shall be by licensed pipe/plumbing subcontractor.

C. Vertical and horizontal separation, materials and structural support at potable and non-potable watermain crossings shall be in conformance to the Standard Specifications for Water and Sewer Main Construction in Illinois.

D. Flushing and Hydrostatic pressure and leakage testing, in accordance with Plastic pipe Institute, AWWA, and NFPA 24.

E. Disinfection and Chlorination of Potable Water system shall conform to AWWA C651 and Standard Specification for Water and Sewer Construction in Illinois.

F. Connect and activate new lines under the supervision of FESS.

G. Valves, piping, and fittings shall be heat fusion bonded polyethylene. Connections to steel piping shall be welded.

H. Cathodic protection, standard 17 pound anode bag with 12 AWG TW copper wire with cathodic clamp, manufactured by CP Solutions, Inc. (http://www.cpsolutionsinc.net/).

3.1 Typical Sketch Details

CU-1 ARMORCAST HANDHOLE
CU-2 HANDHOLE – 1
CU-3 HANDHOLE -2
CU-4 LIGHT POLE
CU-5 TRENCH DETAIL
CU-6 BUMPER POST
CU-7 VALVE VAULT
CU-8 FIRE HYDRANT (ICW OR VILLAGE)
CU-9 DWS – FLUSHING HYDRANT
CU-10 ICW & CHILLED WATER POST INDICATOR VALVE
CU-11 DWS – WATER SERVICE VALVE & CURB BOX
CU-12 WATER B-BOX
CU-13 UTILITY MARKER POST
CU-14 STORM/SANITARY FLATTOP -1
CU-15 STORM/SANITARY FLATTOP -2
CU-16 STORM/SANITARY CONETOP
CU-17 LIFT STATION

Version Number	Date	Author	Change Summary
0	11/26/2012	C. Federowicz	Initial Release
1	03/01/2015	J. Niehoff	Clarified DWS & revised section 1.3.
2	01/30/2016	C. Federowicz	Clarified FM, replaced Plexco with HDPE, added 5-1/4” Pacer Hyd.

FERMILAB ENGINEERING NOTE	SECTION	PROJECT	SERIAL/CATEGORY	PAGE
	FESS/Eng	N/A		CU-1

SUBJECT	NAME	
ARMORCAST HANDHOLE CIVIL DESIGN GUIDE	**J. NIEHOFF**	
	DATE **11-26-2012**	REVISION DATE

MIN. 10K LOAD RATED POLYMER SPLICE BOX AS MANUFACTURED BY ARMORCAST, ELECTRIMOLD, OR APPROVED EQUAL

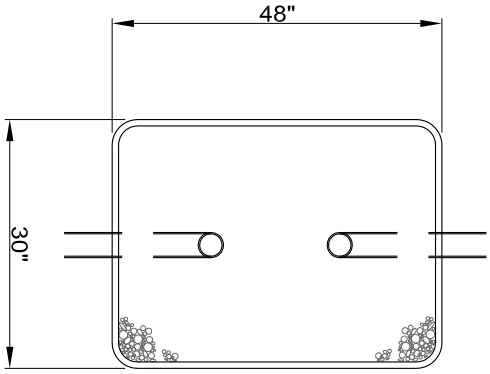

PLAN

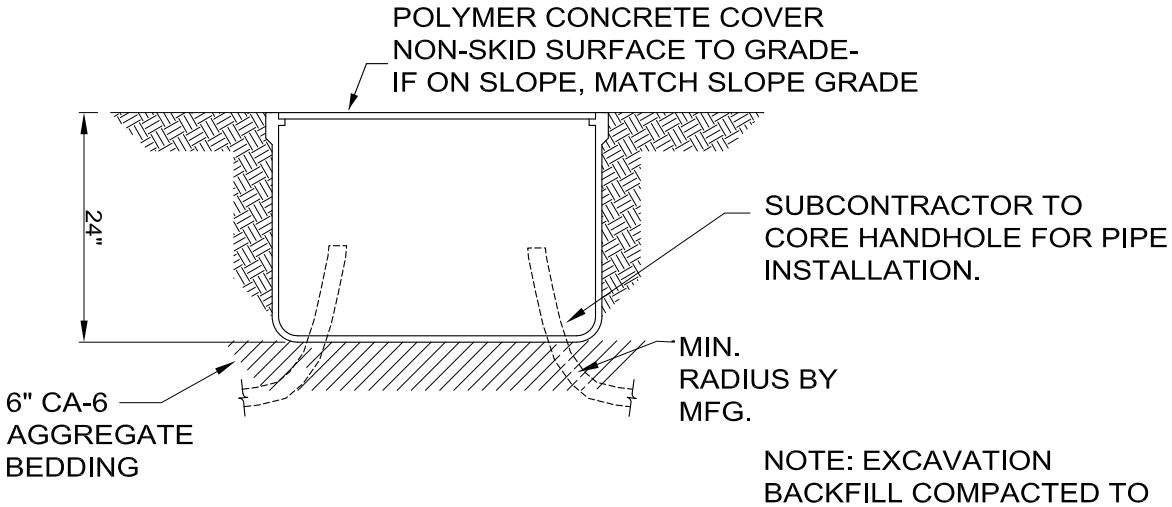

NOTE: EXCAVATION BACKFILL COMPACTED TO 95% DENSITY.

SECTION

TYPICAL FIBER HANDHOLE INSTALLATION

FERMILAB ENGINEERING NOTE	SECTION	PROJECT	SERIAL/CATEGORY	PAGE
	FESS/Eng	N/A		CU-2

SUBJECT	NAME	
HANDHOLE (PAGE 1) **CIVIL DESIGN GUIDE**	**J. NIEHOFF**	
	DATE **11-26-2012**	REVISION DATE

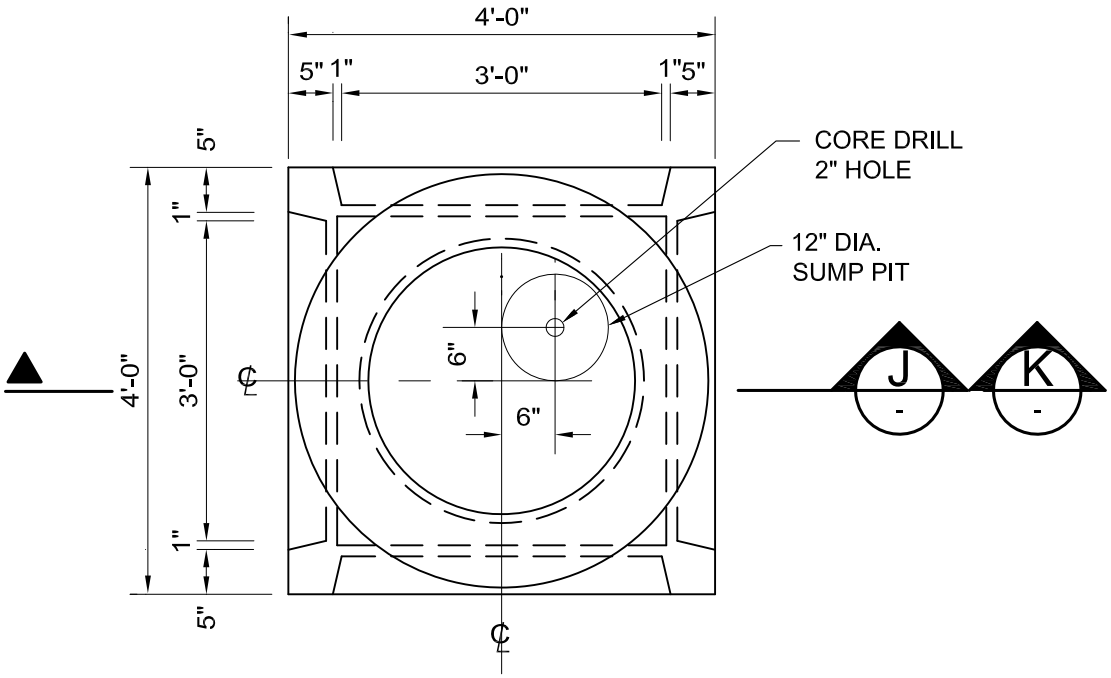

PLAN VIEW

2
-

3/4"=1'-0"

TYPICAL COMMUNICATION HANDHOLE ARRANGEMENT PLAN VIEW

FERMILAB ENGINEERING NOTE	SECTION	PROJECT	SERIAL/CATEGORY	PAGE
	FESS/Eng	N/A		CU-3

SUBJECT

HANDHOLE (PAGE 2)
CIVIL DESIGN GUIDE

NAME: **J. NIEHOFF**

DATE: **11-26-2012**

REVISION DATE:

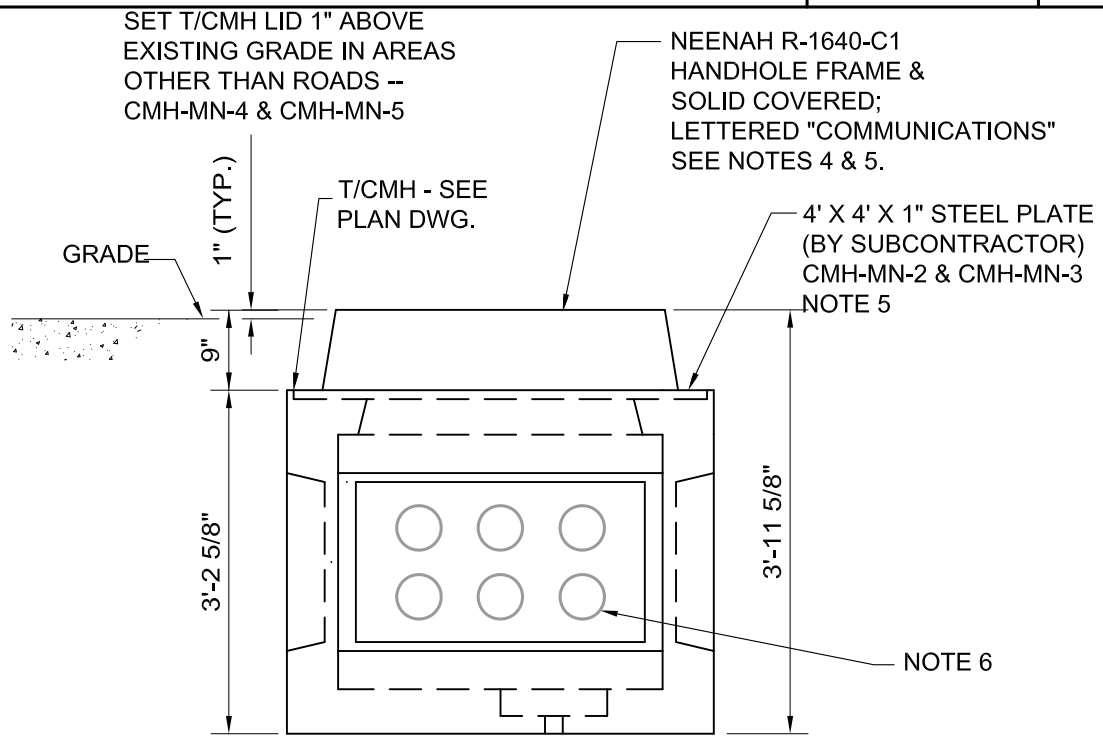

SECTION J-

3/4"=1'-0"

TYPICAL COMMUNICATION HANDHOLE
ARRANGEMENT SECTION VIEW

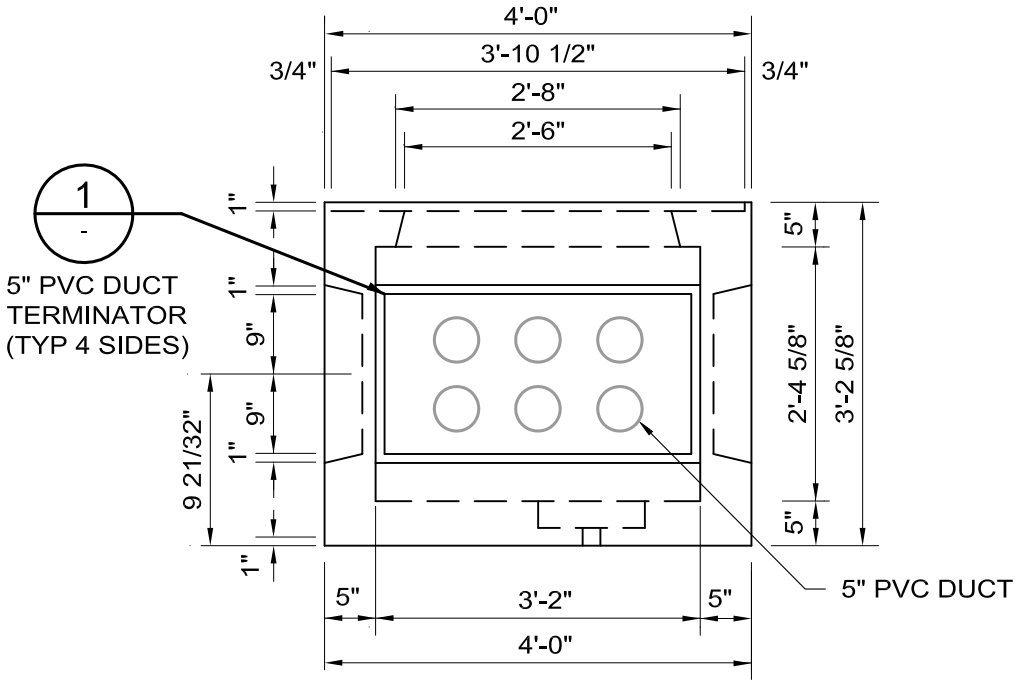

SECTION K-

3/4"=1'-0"

TYPICAL COMMUNICATION HANDHOLE
ARRANGEMENT SECTION VIEW

FERMILAB ENGINEERING NOTE	SECTION	PROJECT	SERIAL/CATEGORY	PAGE
	FESS/Eng	N/A		CU-4

SUBJECT	NAME	
LIGHT POLE CIVIL DESIGN GUIDE	J. NIEHOFF	
	DATE 11-26-2012	REVISION DATE 02-17-2015

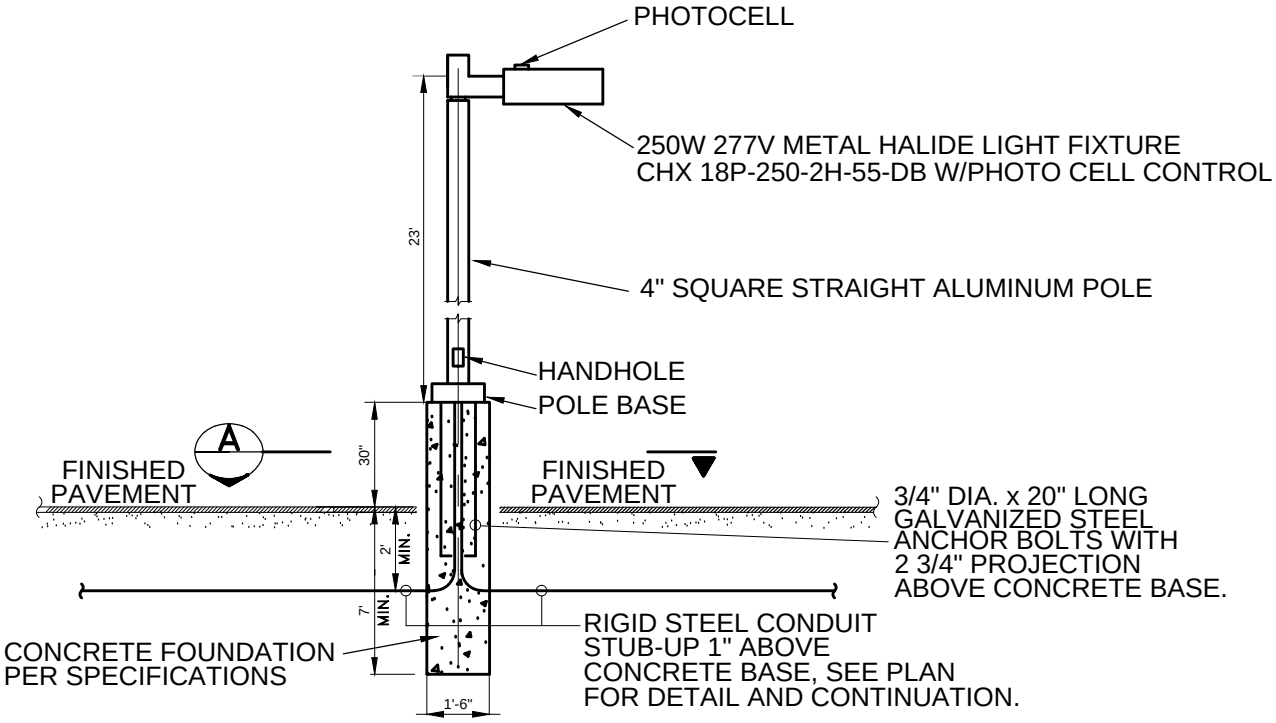

SECTION VIEW

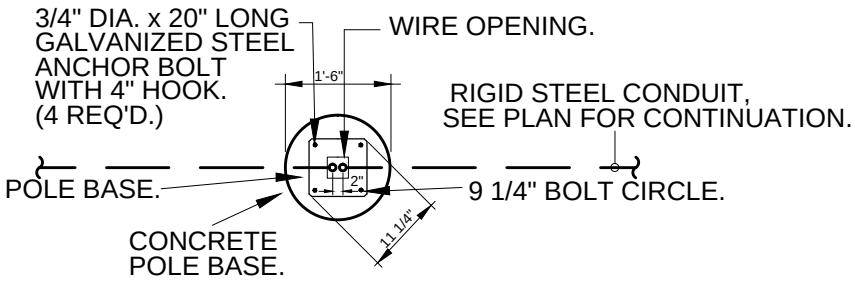

PLAN VIEW

PLEASE NOTE: POLE BASE DIMENSIONS (ESPECIALLY ANCHOR BOLT LOCATIONS) SHOULD BE VERIFIED BY SUBCONTRACTOR TO MATCH EXISTING POLE FOUNDATIONS.)

FERMILAB ENGINEERING NOTE	SECTION	PROJECT	SERIAL/CATEGORY	PAGE
	FESS/Eng	N/A		CU-5

SUBJECT

TYPICAL TRENCH DETAIL
CIVIL DESIGN GUIDE

NAME: **J. NIEHOFF**

DATE: **11-26-2012**

REVISION DATE:

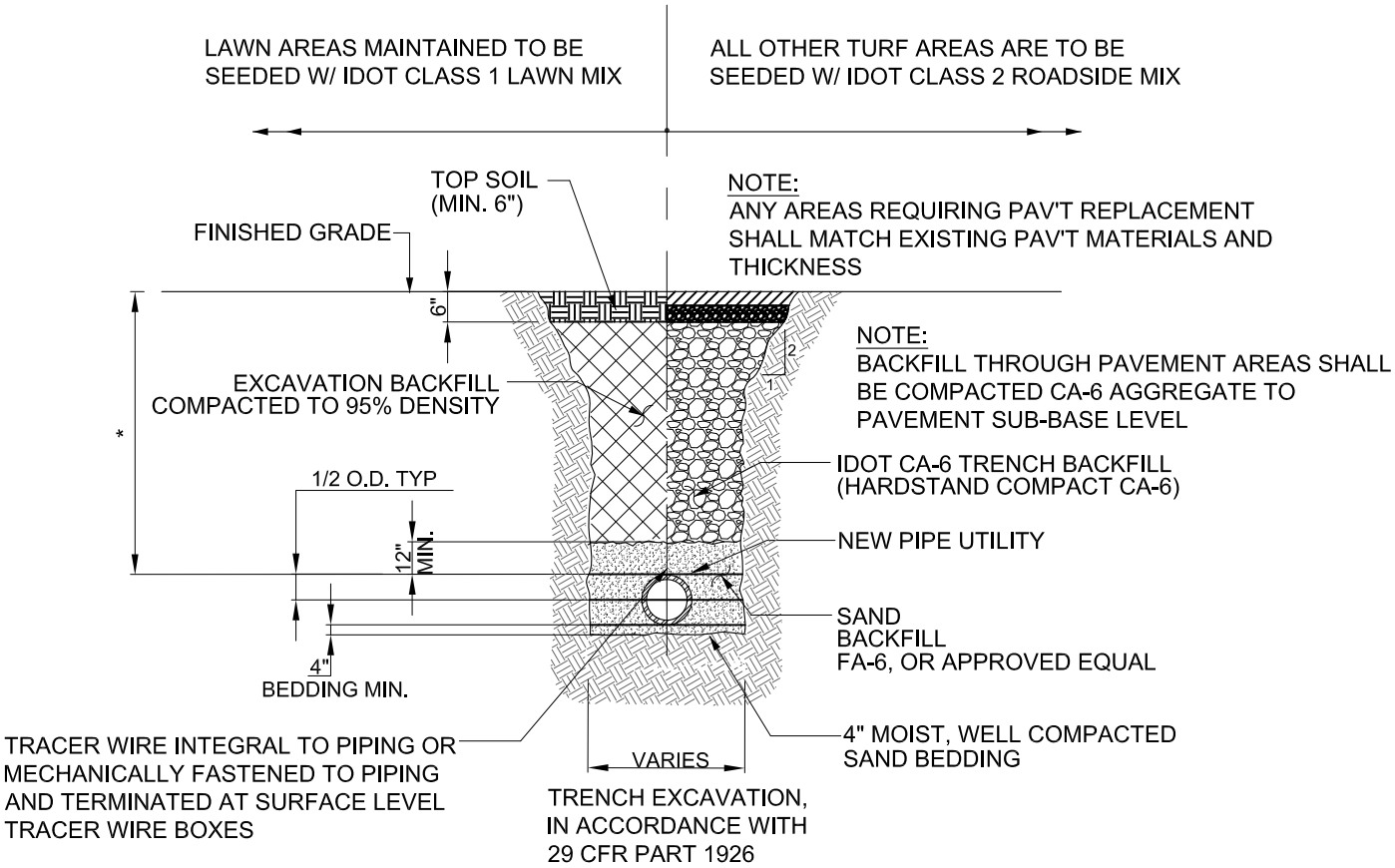

*TYPE OF UTILITY	MINIMUM DEPTH OF COVER
NATURAL GAS	2'-6"
DIRECT BURIED COMMUNICATION	2'-6"
DIRECT BURIED POWER	3'-6"
DOMESTIC WATER	5'-6"
INDUSTRIAL COOLING WATER	6'-0"
STORM/SANITARY FORCE MAIN	5'-6"
STORM/SANITARY GRAVITY	1'-0" STORM / 3'-0" SANITARY

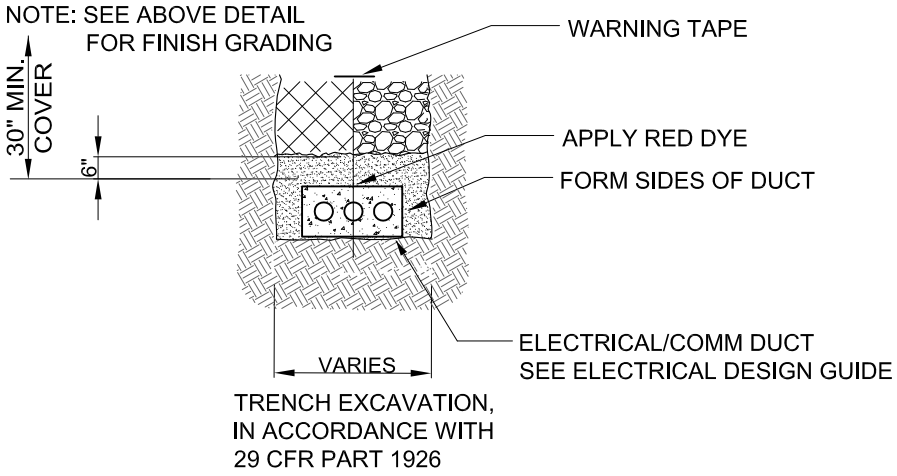

FERMILAB ENGINEERING NOTE	SECTION	PROJECT	SERIAL/CATEGORY	PAGE
	FESS/Eng	N/A		CU-6

SUBJECT	NAME	
BUMPER POST **CIVIL DESIGN DRAWINGS**	J. NIEHOFF	
	DATE 11-26-2012	REVISION DATE

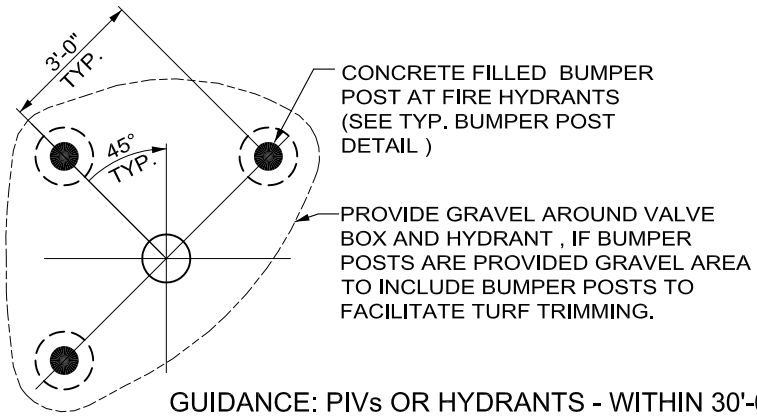

GUIDANCE: PIVs OR HYDRANTS - WITHIN 30'-0" OF PARK
LOT, MINIMUM 2 BOLLARDS TOWARDS
PARKING LOT/ROAD. MOWED/FINE TURF AR
30'-0" OR MORE FROM ROAD, NO BOLLARDS

PLAN

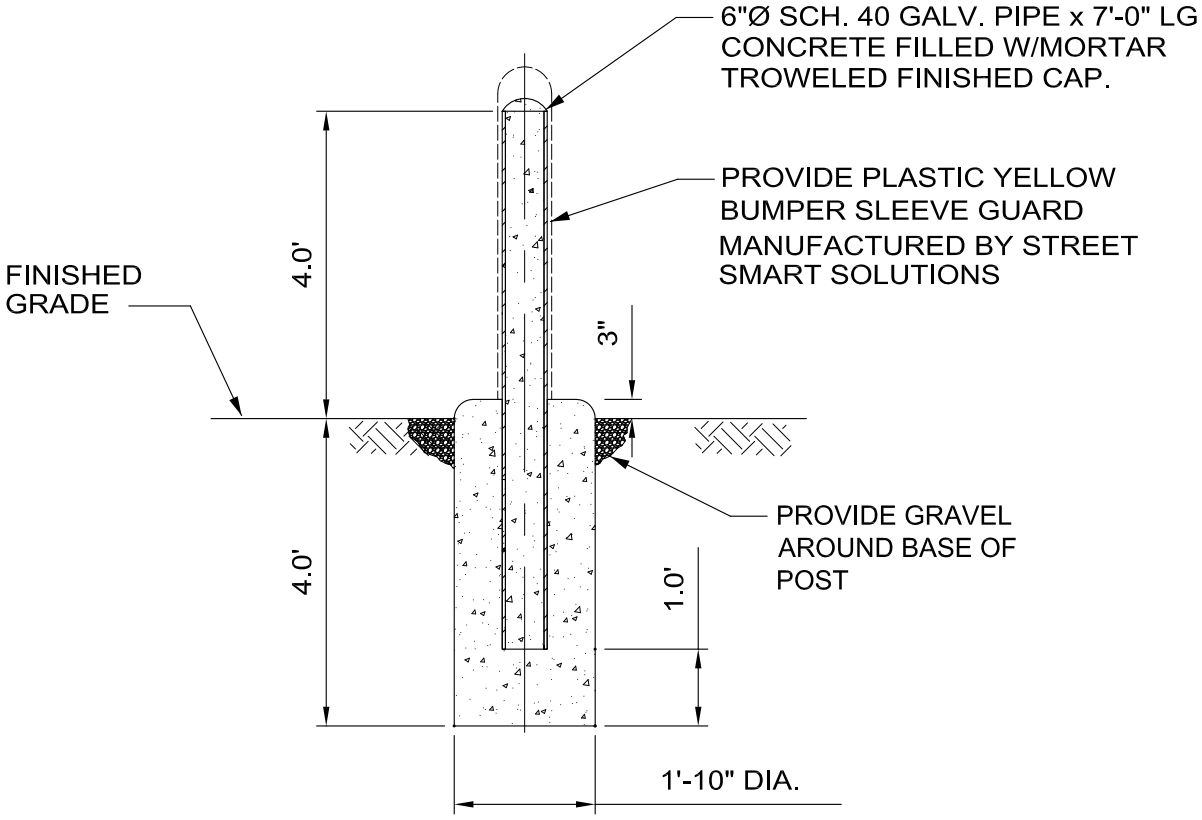

SECTION

NOTE: DESIGNER SHOULD CONSIDER BUMPER POSTS AROUND HVAC OR OTHER SIMILAR EQUIPMENT NEAR TRAFFIC. BUMPER POSTS SHALL BE LOCATED SO AS NOT TO INTERFERE WITH OPERATION AND MAINTENANCE OF EQUIPMENT.

FERMILAB ENGINEERING NOTE	SECTION	PROJECT	SERIAL/CATEGORY	PAGE
	FESS/Eng	N/A		CU-7

SUBJECT	NAME	
VALVE VUALT **CIVIL DESIGN DRAWINGS**	**J. NIEHOFF**	
	DATE **09-25-2012**	REVISION DATE **01-30-2016**

NOTE: ANY AREAS REQUIRING PAVEMENT SHALL BE IN ACCORDANCE WITH IDOT AND CIVIL SITE WORK DESIGN GUIDE

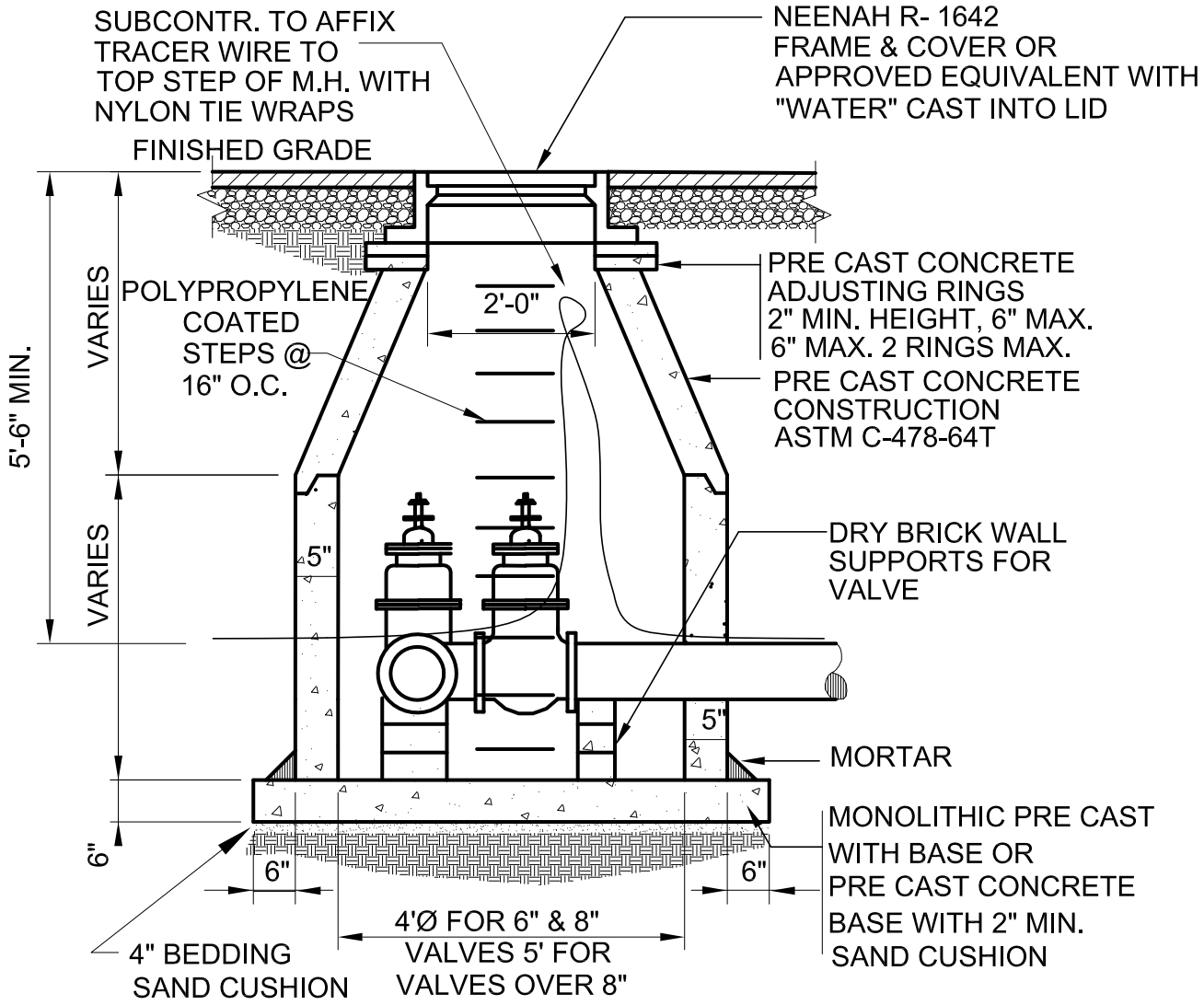

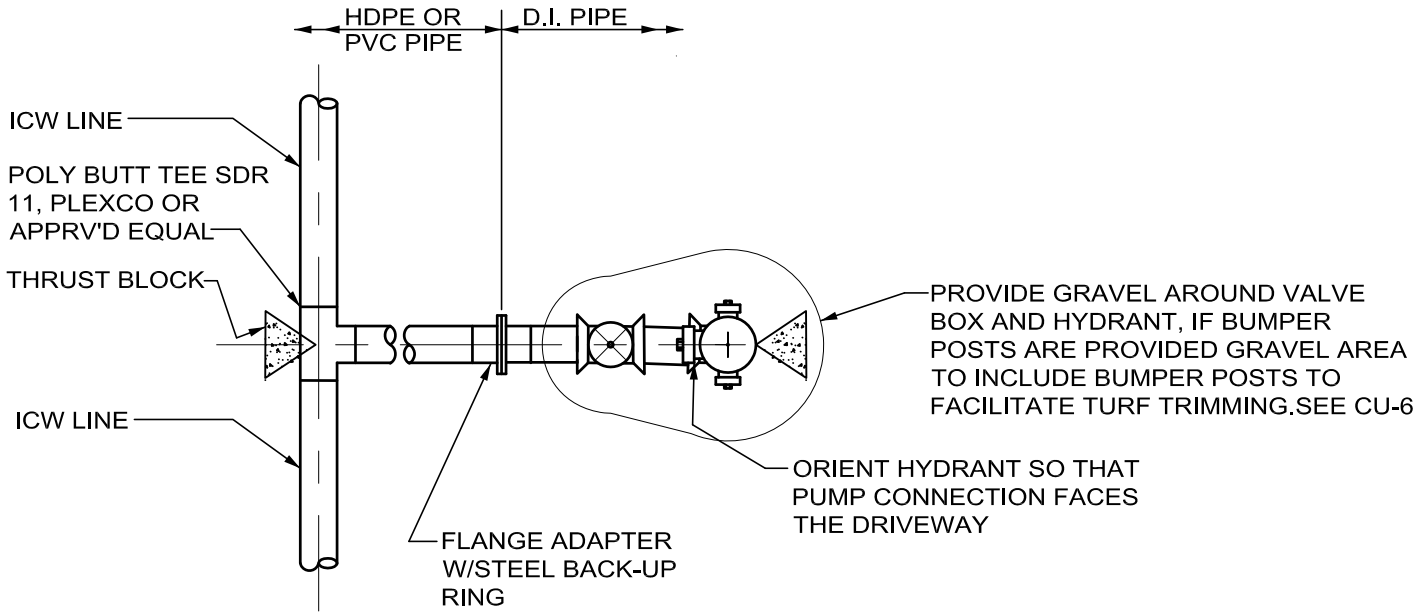

PLAN

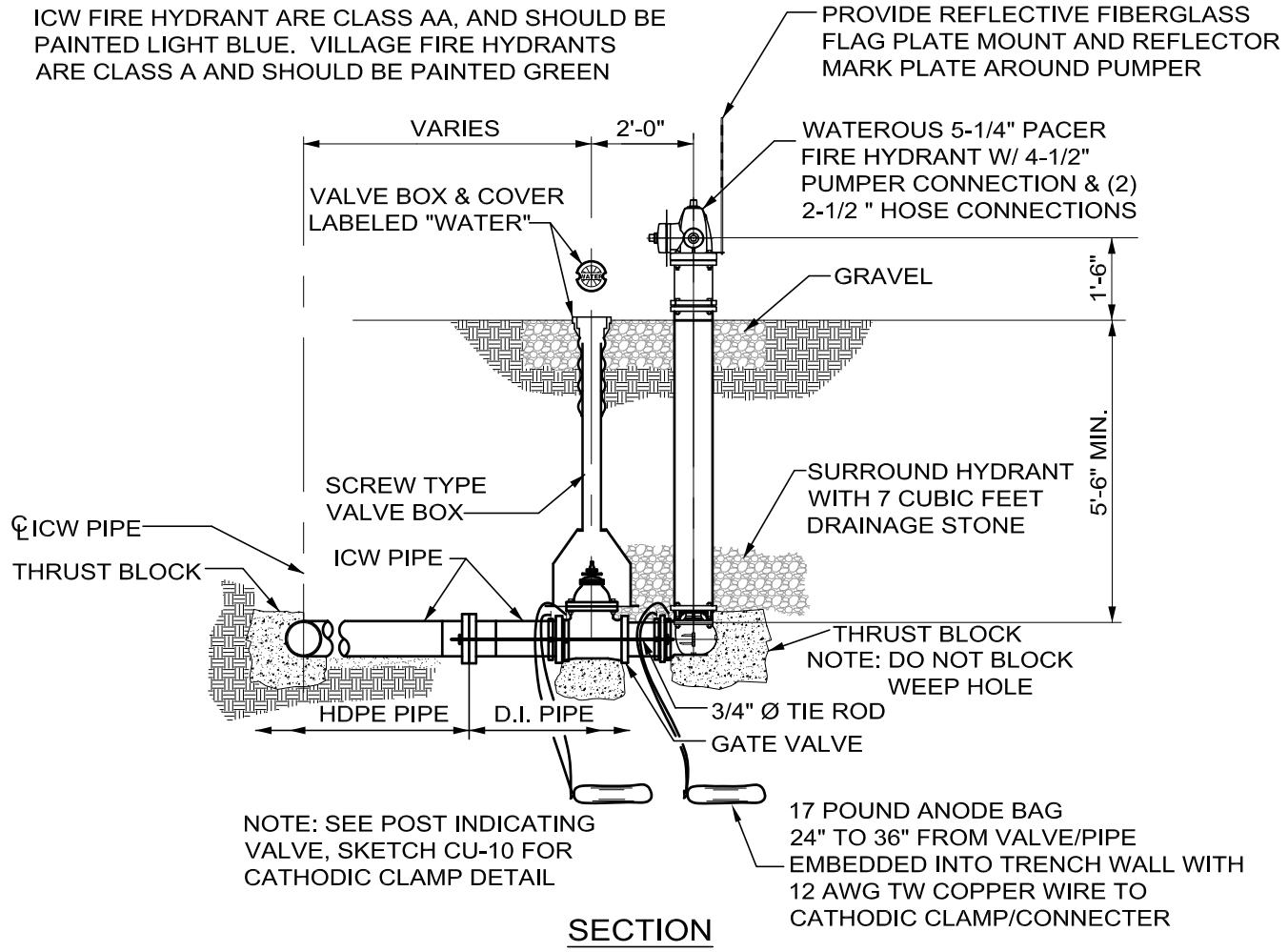

SECTION

FERMILAB ENGINEERING NOTE	SECTION	PROJECT	SERIAL/CATEGORY	PAGE
	FESS/Eng	N/A		CU-9

SUBJECT	NAME	
DWS FLUSHING HYDRANT CIVIL DESIGN DRAWINGS	J. NIEHOFF	
	DATE 11-26-2012	REVISION DATE

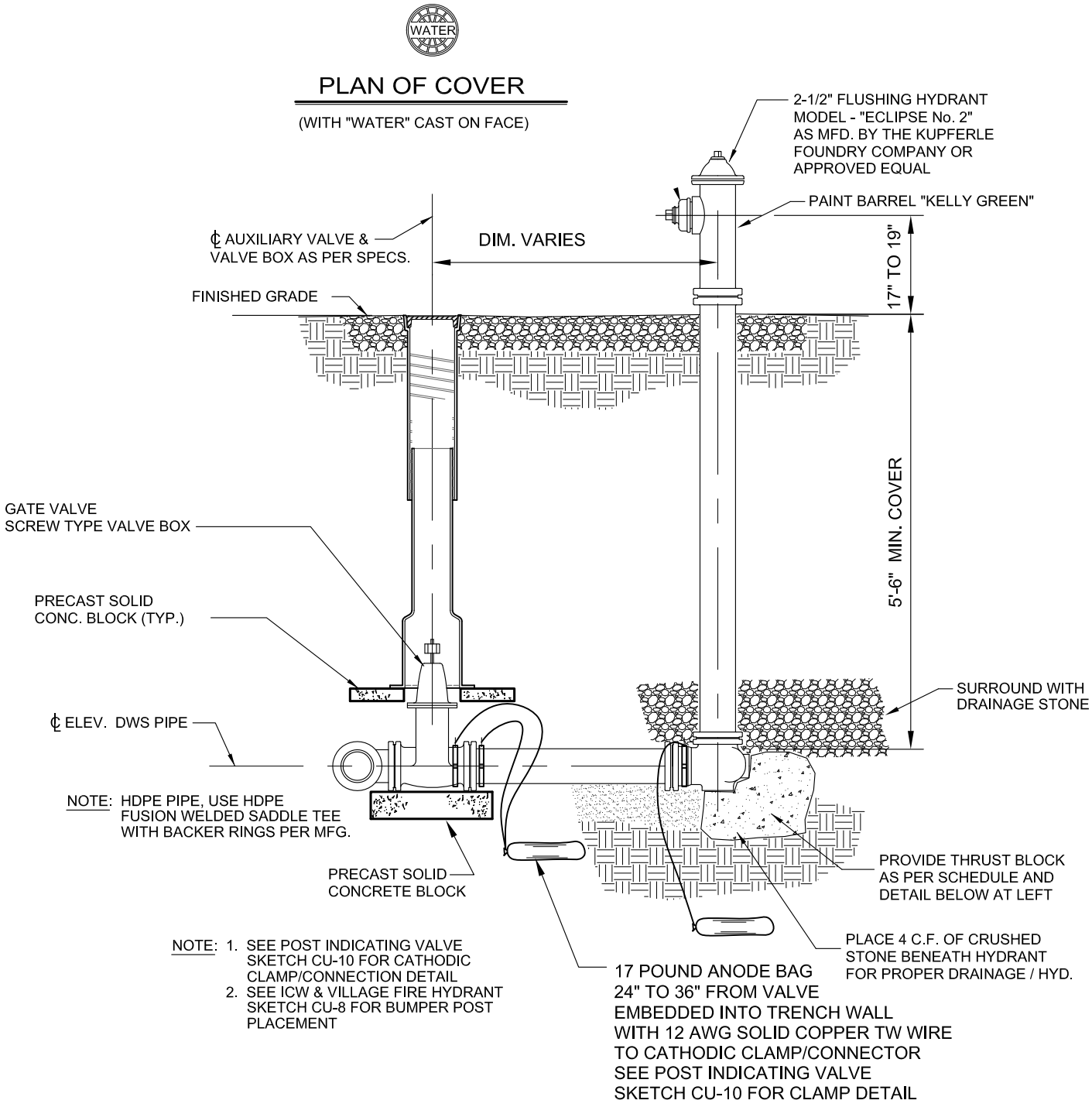

FERMILAB ENGINEERING NOTE	SECTION	PROJECT	SERIAL/CATEGORY	PAGE
	FESS/Eng	N/A		CU-10

SUBJECT	NAME	
POST INDICATING VALVE CIVIL DESIGN GUIDE	J. NIEHOFF	
	DATE 11-26-2012	REVISION DATE 01-30-2015

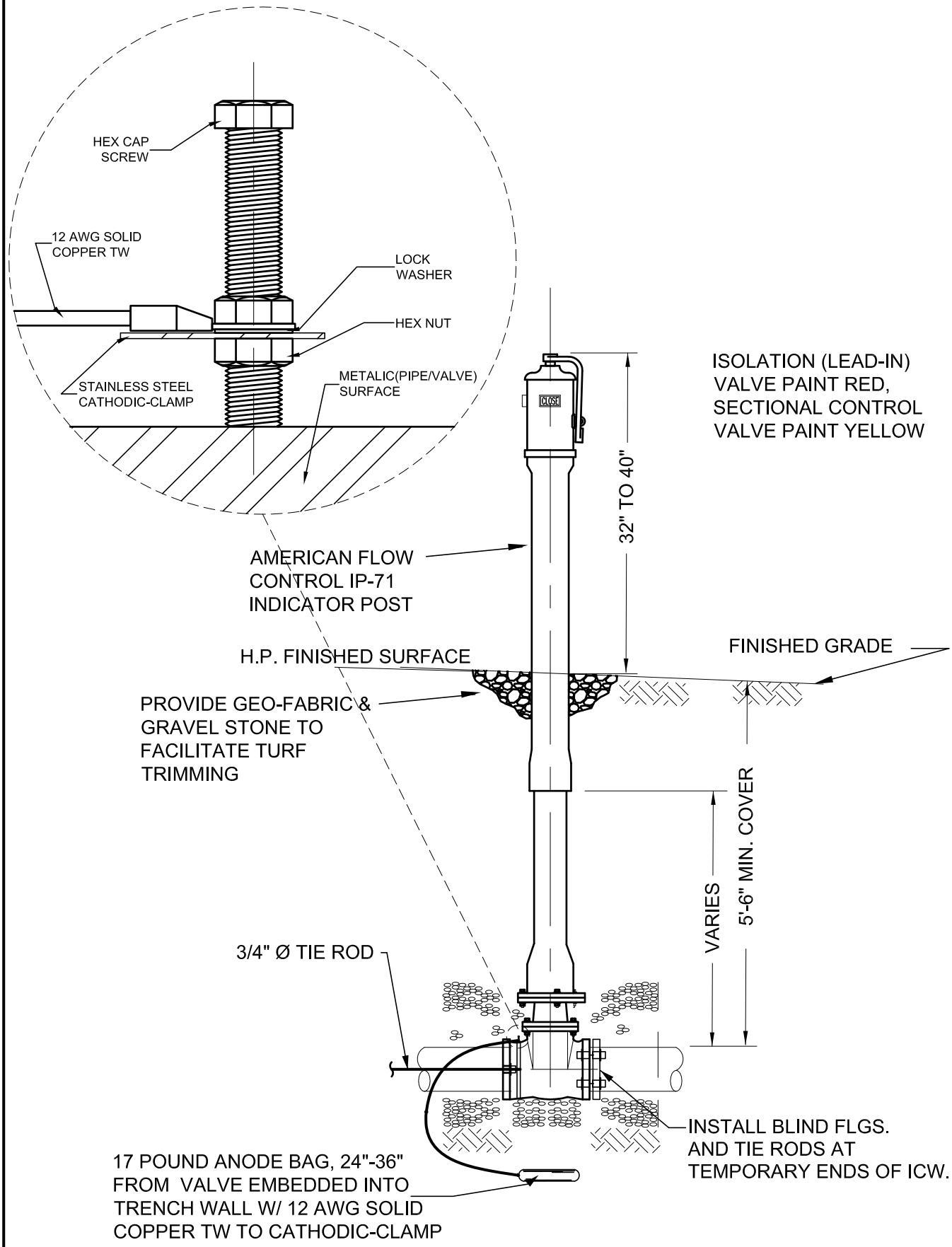

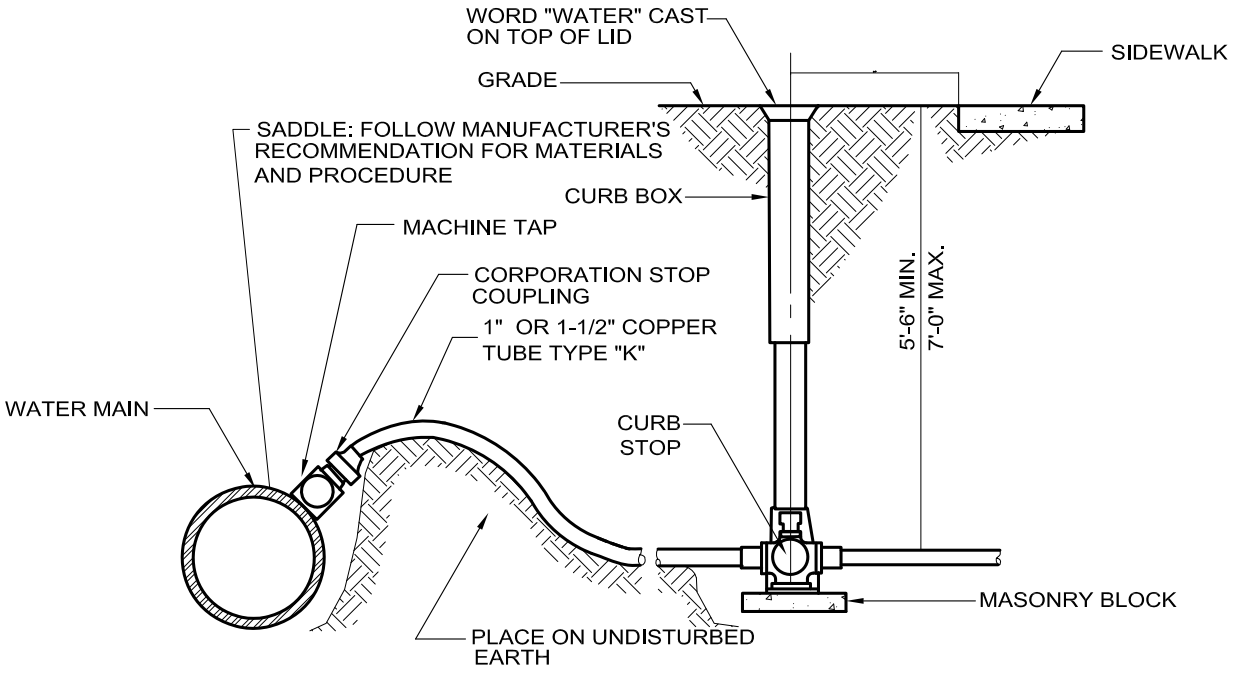
WORD "WATER" CAST ON TOP OF LID
SIDEWALK
GRADE
SADDLE: FOLLOW MANUFACTURER'S RECOMMENDATION FOR MATERIALS AND PROCEDURE
CURB BOX
MACHINE TAP
CORPORATION STOP COUPLING
1" OR 1-1/2" COPPER TUBE TYPE "K"
5'-6" MIN.
7'-0" MAX.
WATER MAIN
CURB STOP
MASONRY BLOCK
PLACE ON UNDISTURBED EARTH

FERMILAB ENGINEERING NOTE	SECTION	PROJECT	SERIAL/CATEGORY	PAGE
	FESS/Eng	N/A		CU-12

SUBJECT	NAME	
TYPICAL WATER B-BOX CIVIL DESIGN DRAWINGS	**J. NIEHOFF**	
	DATE **11-26-2012**	REVISION DATE

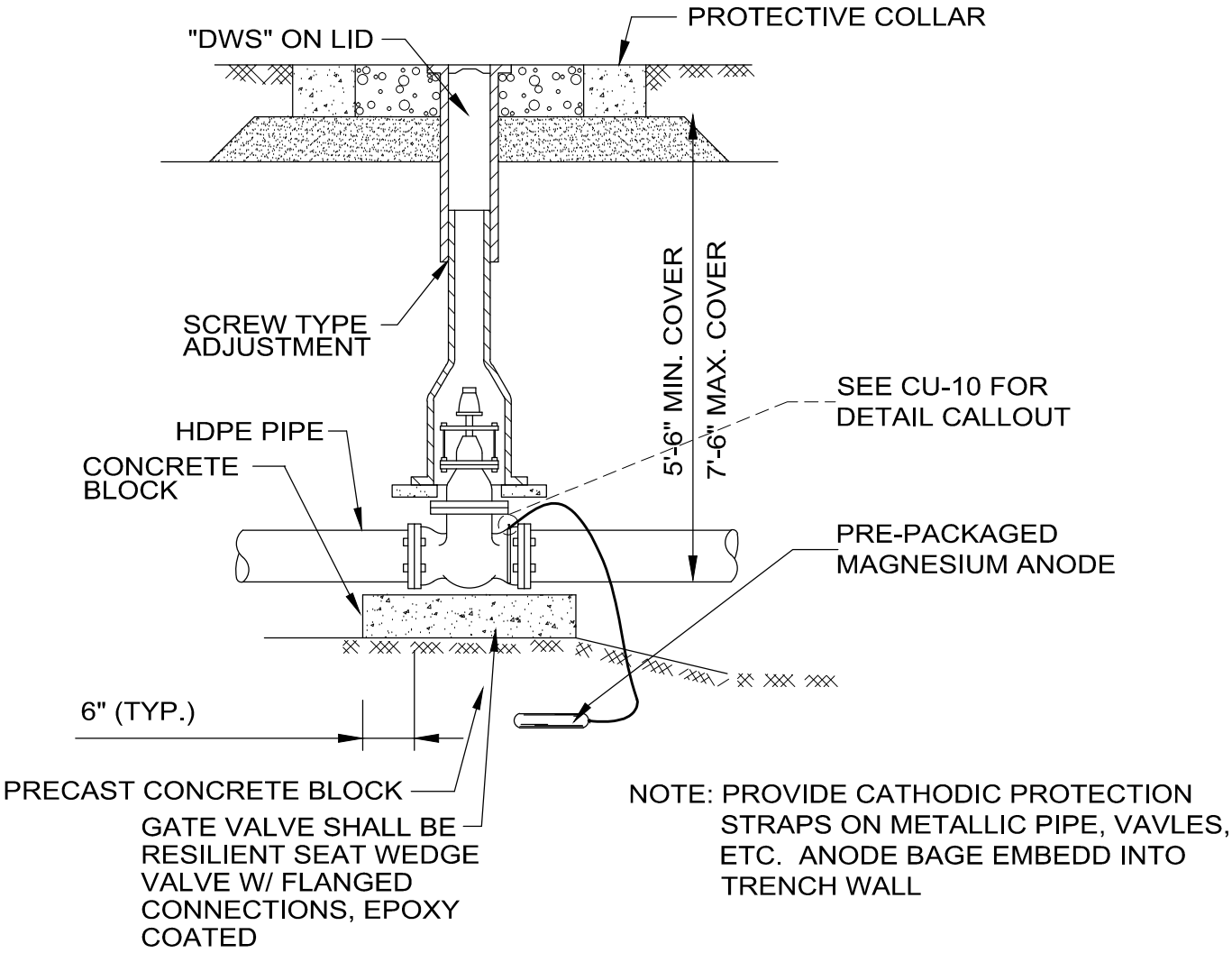

NOTE: PROVIDE CATHODIC PROTECTION STRAPS ON METALLIC PIPE, VAVLES, ETC. ANODE BAGE EMBEDD INTO TRENCH WALL

NOTE:

1. PROVIDE BACKER RINGS AT FLANGED CONNECTIONS BETWEEN VALVE AND HDPE PIPE
2. ALL VALVES IN PAVED AREAS OR VALVES WITHIN 3' OF A PAVED AREA SHALL BE VAULTED.
3. VALVES 10" OR LARGER SHALL BE VAULTED.

FERMILAB ENGINEERING NOTE	SECTION	PROJECT	SERIAL/CATEGORY	PAGE
	FESS/Eng	N/A		CU-13

SUBJECT	NAME	
UTILITY MARKER POST DETAIL **CIVIL DESIGN DRAWINGS**	J. NIEHOFF	
	DATE 11-26-2012	REVISION DATE

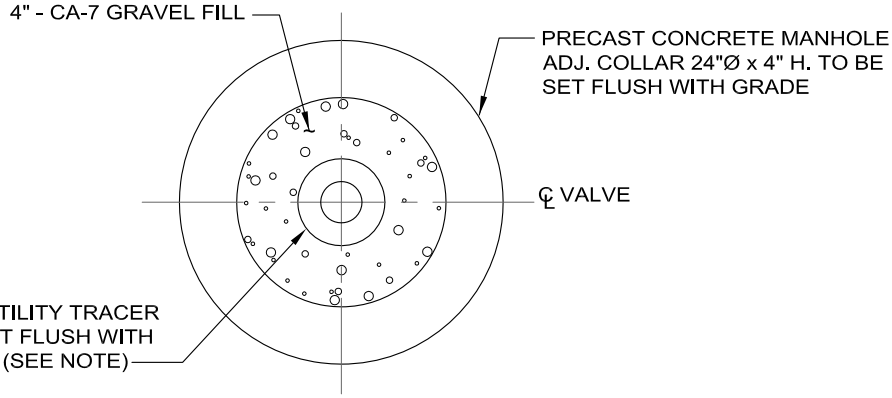

PLAN

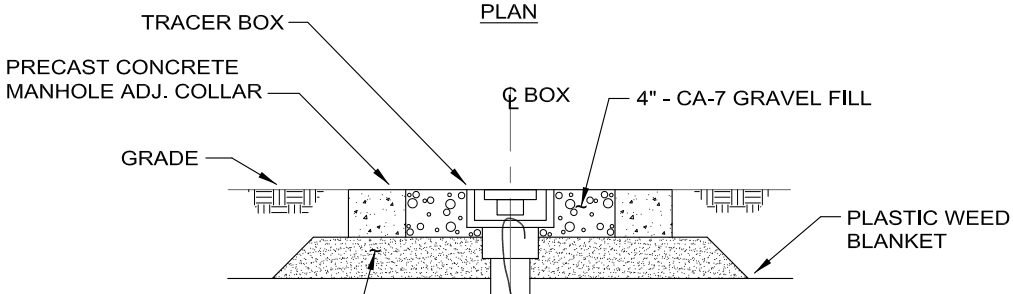

TRACER WIRE SHALL BE "SOLOSHOT EHS" AS MANUFACTURED BY COPPERHEAD INDUSTRIES TAPED TO AND COLOR CODED TO MATCH UTILITY. TRACER WIRE SPLICES SHALL BE AS MANUFACTURED BY COPPERHEAD INDUSTRIES.

PROFILE

NOTE:
TEST UTILITY TRACER BOXES SHALL BE SNAKEPIT MAGNETIZED TRACER BOX, TYPE ROADWAY BOX AS MANUFACTURED BY COPPERHEAD INDUSTRIES. TRACER BOXES SHALL BE COLOR CODED TO MATCH UTILITY BEING TRACED.

FERMILAB ENGINEERING NOTE	SECTION	PROJECT	SERIAL/CATEGORY	PAGE
	FESS/Eng	N/A		CU-14

SUBJECT	NAME	
STORM / SANITARY SEWER FLATTOP - 1	**J. NIEHOFF**	
CIVIL DESIGN GUIDE	DATE **11-26-2012**	REVISION DATE

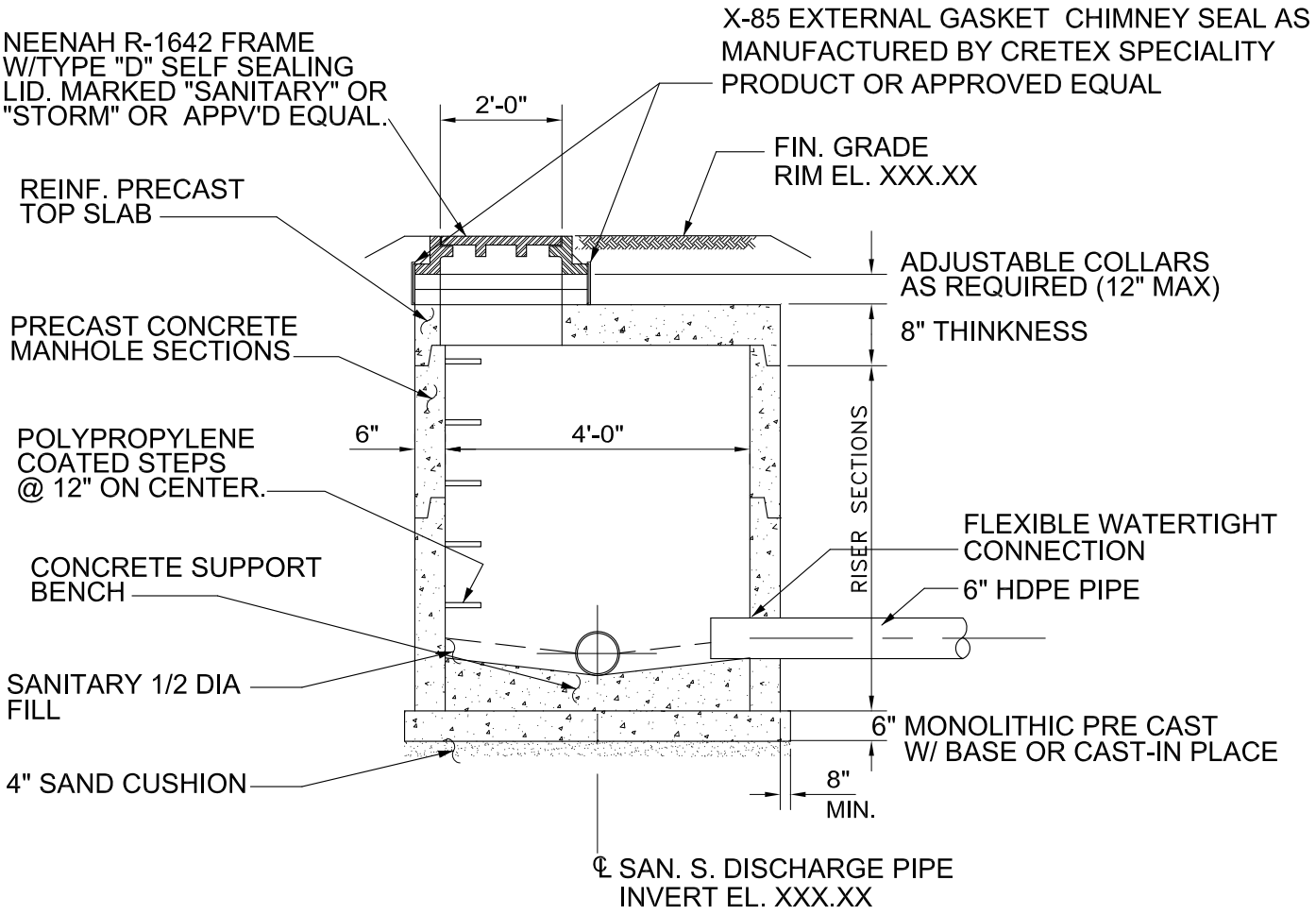

NOTE: REFERENCE SECTION 32 FOR SANITARY SEWER MANHOLE OF THE STANDARD SPECIFICATIONS FOR WATER & SEWER CONSTRUCTION IN ILLINOIS

NOTE: BACKFILL 95% DENSITY COMPACTED SOIL

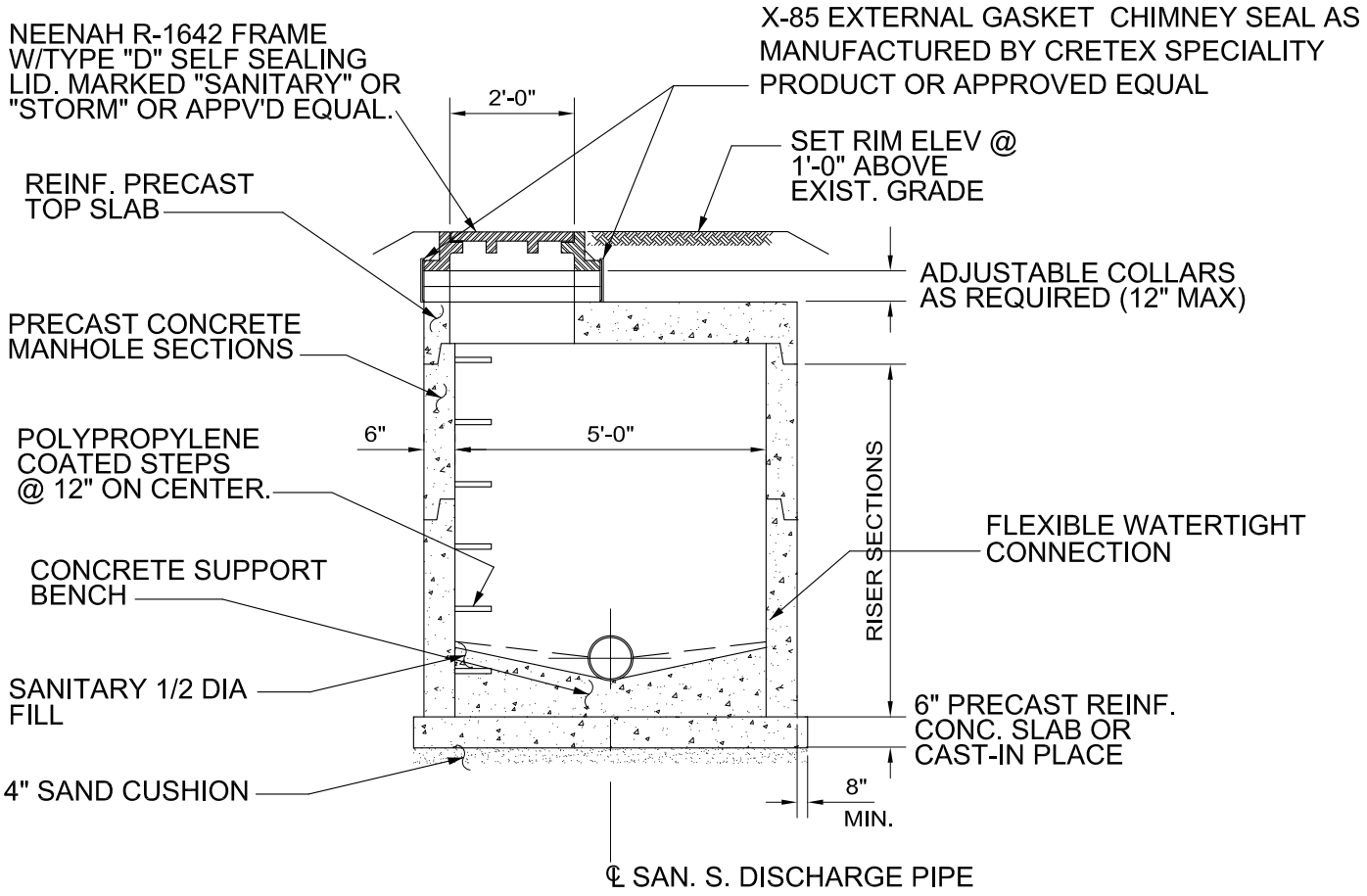

NOTE: REFERENCE SECTION 32 FOR SANITARY SEWER MANHOLE OF THE STANDARD SPECIFICATIONS FOR WATER & SEWER CONSTRUCTION IN ILLINOIS

NOTE: BACKFILL 95% DENSITY COMPACTED SOIL

NOTE:TYPE A MANHOLE LESS THAN 26-INCH PIPE DIAMETER

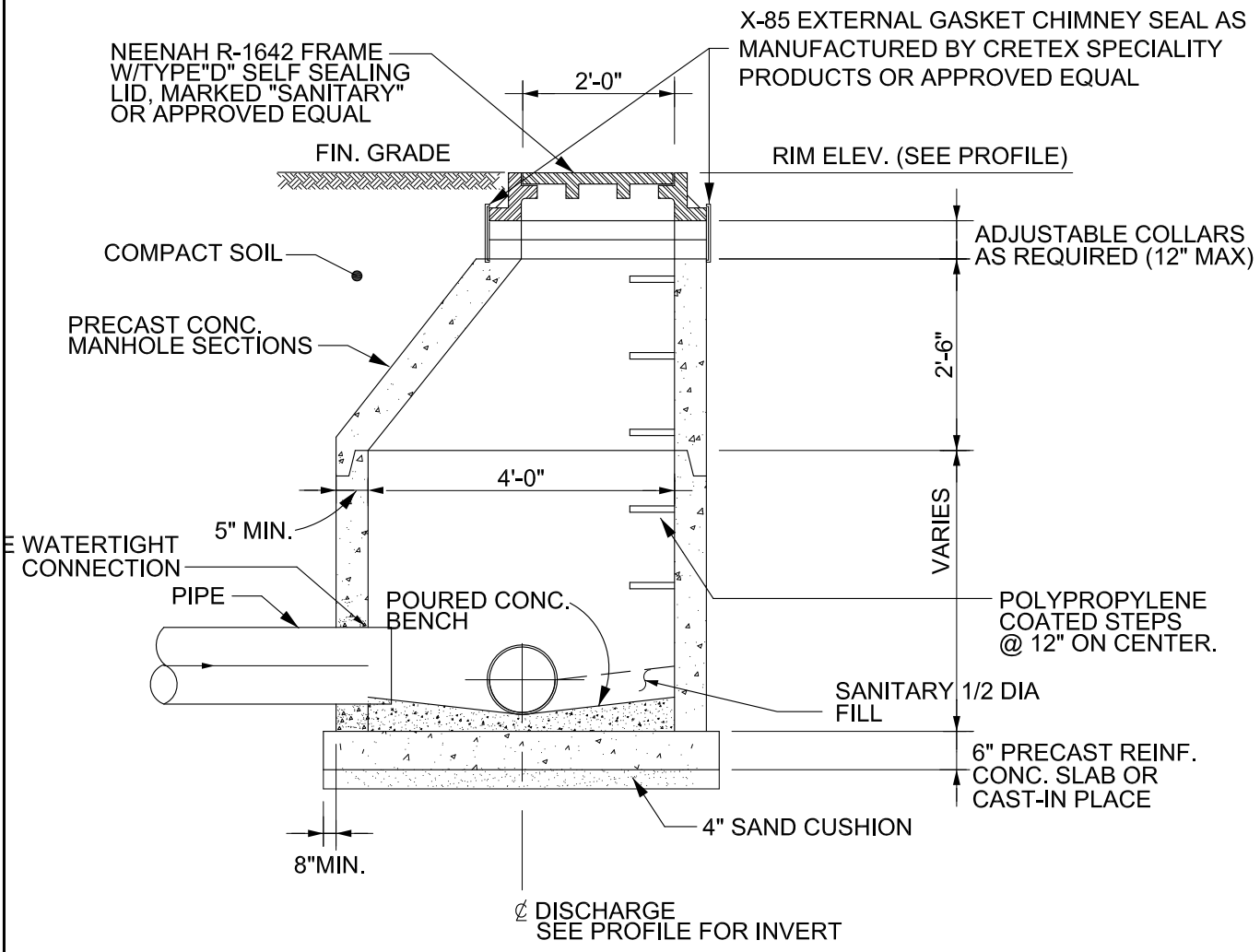

NOTE: REFERENCE SECTION 32 FOR SANITARY SEWER MANHOLE OF THE STANDARD SPECIFICATIONS FOR WATER & SEWER CONSTRUCTION IN ILLINOIS

NOTE: BACKFILL 95% DENSITY COMPACTED SOIL

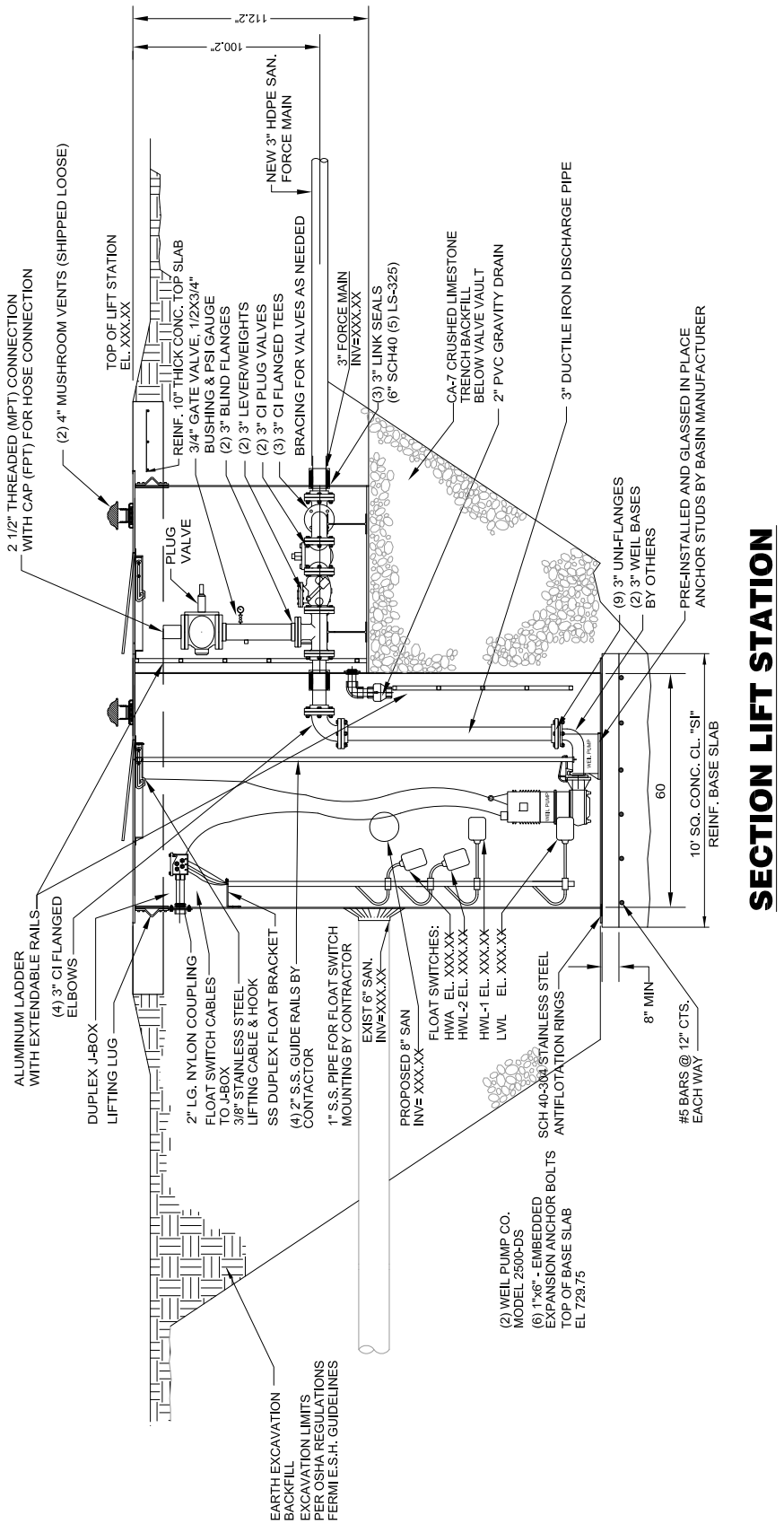

SECTION LIFT STATION

PUMP SPECIFICATION & FLOW REQUIREMENT DATA

Basis of Design

The Facilities Engineering Services Section Design Guide provides architects and engineers with the information for technical programming through the construction documents and commissioning. It is further intended that these guides represent a sustainable and life cycle cost-effective application of proven systems that provide functional facilities that satisfy Fermilab's programs and policy requirements. It should also be noted that The Facilities Engineering Services Section has been delegated responsibilities as follows per the Fermilab Directors Policy No. 18.000 Rev 1:

"Unless the director delegates the responsibilities to another organization for a specific project, FESS shall have the responsibility for all construction activities. Professional architectural and engineering principles shall be applied to the planning, design and construction of facilities and other structures at Fermilab… The director or his deputy will review all modifications for aesthetic considerations…" Currently, the director has delegated all aesthetic review considerations for review and concurrence by the Campus Architect, whose role is filled within FESS.

This section applies to architectural and interior design of buildings and spaces.

1.0 Scope

A. The typical industrial building at Fermilab is unprotected exposed steel with metal siding or masonry enclosure.
B. All buildings shall be designed for ease of access to all equipment for maintenance
C. This section shall be used closely in conjunction with the Sustainability section of the Design Guides.

1.1 Applicable Codes/Standards

A. International Building Code (IBC)
B. International Residential Code (IRC)
C. National Fire Protection Association (NFPA) Codes/Standards, but not limited to:
   - NFPA 101, Life Safety Code
D. Fermilab's ES&H Manual (FESHM)
   - Chapter 6020.4, Concepts of Egress
   - Chapter 6040.1, Fire Construction Requirements – Fire Retardant Coatings for Combustible Construction Materials
   - Chapter 6040.2, Fire Construction Requirements – Interior Finish Requirements
E. The Fermilab Graphic Standard's color palette must be consulted when selecting colors, http://www.fnal.gov/faw/designstandards/
F. High Performance and Sustainable Buildings (HPSB) Guiding Principles for New Construction or for Existing Construction.
G. Illinois Accessibility Code

1.2 Related Sections

A. All Design Guide sections shall be carefully integrated and coordinated with the architecture and interior design of a facility or space.

1.3 Design/Construction Documents

A. Provide industry standard as delineated in AIA and CSI standards. Construction document shall be prepared for firm fixed-priced competitive procurement unless noted otherwise. The construction documents shall be complete and coordinated between disciplines. The construction documents shall be detailed and clear enough to result in a single interpretation of a specific set of data or facts. Specifications shall be performance based.

B. Provide a life safety drawing(s) depicting building code requirements including but not limited to construction type, occupancy classification, exits, exit calculations, egress travel distance, separations, and location of fire extinguishers.

C. Font size used on drawings shall be large enough to be clearly legible for half-sized reduced set printing.

D. Specifications shall be industry standard CSI/Masterspec. NOTE: Fermilab has very specific sections and requirements for Division 01. Coordination with the Fermilab design team is required.

2.0 Design Criteria and Evaluation

2.0.1 Space Allocation - Guidance

Office Description and Hierarchy							
Identifier	Example Occupants	Type	Area (SF)*	Exterior Window	Visitors 3-4	Visitors 1	Notes
PO1	Chief Division Head	Private /enclosed with door	200	Yes	x		Or equivalent (i.e. LBNF Project Director)
PO2	Department Head Experiment Spokesperson	Private /enclosed with door	140	Yes	x		Or equivalent (i.e. LBNF Project Manager)
PO3	Managerial Office	Private /enclosed with door	120	Yes	x		
PO4	Group Leader Non-Managerial	Private /enclosed with door	100**			x	Heads down focused work; the most common mid management office.
PO5	Staff Private Office	Private /enclosed with door	100**			x	Heads down focused work. Limited application. Where security required for work.
Cube 1	Staff Open Cube Engineer	Open Cube 57" high with glass toppers, visual privacy	64**			x	Heads down focused work; the most common staff cubicle; collaborative staff
Cube 2	Visitor open cube	Open Cube 57" high with glass toppers, visual privacy	48**				Common for students, visitor, non staff, or occasional user.
T01	Tech office / workspace Technician	Open Cube 57" high with glass toppers, visual privacy	64**				Benching space

**Areas are approximate and average. Small variations (in both the plus and minus direction) may occur due to building columns, exterior mullion alignment, baseboard heating, or other infrastructure elements or other*

*** additional enclosed huddle spaces will be provided for shared use*

A. The Office Description and Hierarchy chart above shall be used as guidance for space allocation.

- Office support area limited to additional 22% of the primary office area. Included in this support area are:
  - Reception areas
  - Meeting rooms/collaboration rooms
  - File areas
  - Central storage
  - Library / reference

B. Not included in the support area calculations are:

- Toilets
- Stairwells
- Elevators
- Corridors
- Building equipment rooms

C. In general, when planning offices, there should be an emphasis on shared spaces rather than private offices.

D. Wherever possible aisles should be open, with open office areas providing views to the outside or to the Atrium wherever possible.

E. Daylighting and views shall be maximized.

F. Networking System Space: It is desirable that a minimum of 84" H x 24"W x 48"D space (in a closet or otherwise clean environment or computer room) shall be reserved for a free standing 4 post equipment rack within 24" of a wall. Access to front, back, and 1 side is needed. One side of the rack can be close to a wall, final determination will be by the Project Design Team. Small buildings and installations could use a 2 post or wall mount rack, verify requirements with Computing. Final networking system space must be approved by Fermilab Computing prior to final design.

G. Building Storage: In addition to specific customer storage requirements, every building shall be provided with generous storage areas for building attic stock materials and equipment.

H. Mechanical Spaces: All mechanical spaces shall provide for 360 degree aisle space around all equipment for servicing and replacement.

2.1 Products, Material, and Equipment

2.1.1 Common Materials and Finishes – Guidance

Fermilab desires low-maintenance finishes throughout all spaces.

A. Floor Finishes:
   - General office space: Carpet tile.
   - Entrances, stairs, areas susceptible to damage: Ceramic tile, high performance sheet vinyl or tile.
   - Large entrance mats at all exterior doors and at separations between workshop type areas and office areas

B. Standard office partition: ceiling high metal stud with 5/8" gypsum board with low VOC paint finish or prefabricated modular wall system.
   - Provide borrowed light where possible by means of glass store fronts, transoms, and side lights.

C. Typical Ceiling: lay-in acoustical tile with high-Noise Reduction Coefficient (NRC) and Hi Ceiling Attenuation Class (CAC).

D. Toilet Rooms: ceramic tile walls and floors.

E. Roof: roofs to be cool roofs and shall have a thermal resistance of at least R-30. The preferred roofing system is JM Built UP Roofing system 4CID CRG with 20-year warranty.

2.1.2 Color Selections - Guidance

A. All color selections are derived from the Fermilab standard color chart included at the end of this Design Guide section. Approved colors are subject to change. All color selections shall be approved by the Campus Architect.

2.1.3 Doors and hardware (Aluminum and Hollow Metal)

A. Aluminum storefront framing is utilized for interior office aisle walls, building entrances, and exterior windows throughout the Fermilab site.

B. Locksets shall have interchangeable cores to accept Best A-2 System with 7-Pin small format cylinders and cores. **Final cores and keying is provided by Fermilab.**

C. If ID card access is required, Fermilab uses Johnson Controls Cardkey 2000 site-wide security system and is monitored by Fermilab site-wide FIRUS system. Doors interfaced with electronic locks must be coordinated with the Fermilab Security Department prior to design completion.

D. Overhead doors with an operator to have a counter installed. Counter to be installed where easily read from ground level. A label shall be provided indicating install date, installed life cycle of door/springs and the start number on the counter.

Version Number	Date	Author	Change Summary
0	11/26/2012	G. VanZandbergen	Initial Release
1	03/01/2015	J. Niehoff	Added Fermilab's Graphic Standard & added network space
2	12/11/15	R. Merchut, G. VanZandbergen	Updated language, products, & materials
3	7/20/18	R. Merchut	Updated space allocation, removed hardware sets, updated language

Basis of Design

This section applies to the design of structural building systems, non-building structures, and element systems.

1.0 General (Scope)

A. All structural work shall be designed by or under the direction of an Illinois licensed Structural Engineer or a licensed Architect as prescribed by the Illinois Department of Financial and Professional Regulation.

B. Calculations shall be produced and checked for all structural designs. A&E's shall provide calculations in electronic format. Input and output data shall be provided for calculations done by computer programs. Calculations shall have a numbering system and be indexed. Calculations shall be filed in the project file.

C. Drawings shall be sufficiently detailed to allow for firm fixed price procurement. Drawings shall indicate design loads on plans. Normally the structural drawings shall be divided into Structural Concrete (SC) and Structural Steel (SS).

D. Prior to start of calculations, the A/E subcontractor shall submit to Fermilab the design assumptions including but not limited to: intended codes being used, gravity live loads, superimposed dead load, and loads due to wind, seismic and soils, and proposed computerized design aides.

E. The design criteria listed herein is not intended to replace engineering judgment specific to the uniqueness of the project.

1.1 Applicable Codes/Standards

A. International Building Code (IBC)

B. American Concrete Institute (ACI) Codes, Specifications, and Guides including but not limited to:
- ACI 301, Specifications for Structural Concrete
- ACI 318, Building Code Requirements for Structural Concrete and Commentary
- ACI 530, Building Code Requirements and Specification for Masonry Structures
- ACI 562, Code Requirements for Evaluation, Repair, and Rehabilitation of Concrete Buildings and Commentary

C. American Society of Civil Engineers (ASCE) Standards, including but not limited to:
- ASCE/SEI 7, Minimum Design Loads for Buildings and Other Structures
- ASCE/SEI 41, Seismic Evaluation and Retrofit of Existing Buildings

D. American Institute of Steel Construction (AISC)
- AISC Steel Construction Manual
- AISC 360, Specification for Structural Steel Buildings
- AISC 303, Code of Standard Practice for Steel Buildings and Bridges

E. American National Standards Institute (ANSI)
- ANSI Z359, Fall Protection Code

F. American Welding Society (AWS)
   - AWS D1.1, Structural Welding Code - Steel

G. Research Council on Structural Connections (RCSC)
   - RCSC Specification for Structural Joints Using High-Strength Bolts

H. Steel Joist Institute (SJI) Code and standard specifications
   - SJI-COSP Code of Standard Practice for Steel Joists and Joist Girders

I. American Iron and Steel Institute (AISI)
   - AISI S100, North American Specification for the Design of Cold-Formed Steel Structural Members

J. American Wood Council (AWC)
   - National Design Specification (NDS) for Wood Construction
   - Special Design Provisions for Wind and Seismic (SDPWS)

1.2 Design/Construction Documents

A. Provide standard industry construction documents.

B. Construction documents shall show the size, section and relative locations of structural elements with elevations, column centers, and offsets dimensioned. Design loads and other information pertinent to the structural design shall be indicated on the construction documents. Information to be indicated in accordance with IBC requirements shall include:
   - Floor live load
   - Roof live load
   - Wind design data
   - Earthquake design data
   - Geotechnical information used for design
   - Special loads

1.3 Related Sections

A. Facilities Engineering Services Section Design Guide – Civil Site Work

B. Facilities Engineering Services Section Design Guide – Civil Utilities

2.0 Design Criteria - Structural Loading

A. Design loads and load combinations shall be determined in accordance with the latest edition of ASCE 7, “Minimum Design Loads for Buildings and Other Structures” and as specified below.

B. Fermilab specific Geotechnical: This design criteria is based on historical design of underground enclosures constructed at Fermilab.
   - For rectangular enclosures under compacted berms the vertical earth overburden load shall be considered as dead load (for determining ACI Load

Factors) at 130 PCF. A 10 percent down-drag shear factor shall be applied to vertical loads to account for the increased stiffness of the enclosure compared to the surrounding earth backfill.

- Vertical loads on enclosures shall consider a D8 rolling over enclosure during backfill. Normally this loading will not be critical for berms over 10 feet of depth above the enclosure. Track vehicles shall not be allowed directly over enclosures until five feet of earth is under the tracks.
- Persons shall not be allowed in an enclosure during backfill operations until there is five feet of earth cover over the enclosure.

- For rectangular enclosures under compacted berms loads may be treated as a uniform load based on the lateral value at mid height of the wall. Lateral earth loads shall be treated as live loads.

C. Enclosures shall be designed for a minimum of 3’-0” of unbalanced earth backfill. The maximum allowable unbalanced backfill requirement shall be specified on the earthwork drawings and specifications.

D. Enclosures shall employ a drainage system consisting of a minimum of two feet of free draining granular backfill along walls with an under drain system tied into a system of sumps and pumps to relieve hydrostatic pressure on the underground facilities. Therefore hydrostatic lateral pressure may be taken as zero (0). Enclosures are normally damp proof and not water proof.

- Unless representative existing borings indicate a specific design value, spread footings shall be proportioned for no more than 3000 PSF net bearing pressure.
- For major structures or unique conditions, Fermilab will commission a geotechnical study that will determine specific loading requirements.

E. Wind Loads: Exposure Category C shall be used for the determination of wind forces.

F. Snow Loads: The flat roof snow load (Pf) shall not be less than 30.0 psf for any building on site.

G. Earthquake Loads: Determine “Site Class” from information contained in existing geotechnical data for a particular location on the site. If geotechnical data and soil properties are not available or known in sufficient detail to assign a specific site class and a new geotechnical report is not provided, then the classification assigned to the site shall be “Site Class D”.

H. Lateral Soil Loads: The following shall be used for determining design lateral soil loads, unless local soil tests have been performed.

Active earth pressure coefficient, Ka = 0.5 for rigid box structures
Active earth pressure coefficient, Ka = 0.25 for retaining walls
Unit weight of soil for berms shall be taken as 130 pcf

- Active earth pressures for buttressed or counterfort walls shall be determined by a geotechnical consultant.

I. Structural granular backfill and granular backfill around enclosures: Granular backfill shall normally be CA-6 except CA-7 shall be allowed when freezing conditions exits.

2.1 Concrete Specific

A. All structural concrete shall be designed as reinforced concrete in accordance with ACI 318, latest release.
   - Where possible, below grade, concrete enclosures shall be designed to carry moments through intersecting joints. Fixed end moments shall be distributed based on relative stiffness.

B. Non-structural concrete elements may be designed for plain concrete if it can be demonstrated that the serviceability requirements will be achieved.

C. Concrete structures shall be designed to achieve economical elements that meet the required load carrying capacity and serviceability requirements.

D. Constructability shall be considered in all design.

E. Critical construction joints shall be indicated on the drawings.

F. Rebar splices shall be shown on the drawings and/or tables clearly listing the minimum required lap lengths for each rebar size, location and concrete strength shall be shown on the drawings.

G. The structural drawings shall indicate the type of concrete used for each element of the project. Include the following minimum information: compressive strength, maximum water/cementitious material ratio, air-entraining requirements, and where each type of concrete is to be used.

H. Concrete compressive strength shall not be less than 4000 psi at 28 days for cast-in-place structural concrete except for slabs on grade

I. Concrete compressive strength and slump for floor slabs on ground shall conform to the recommendations of ACI 302.1R, “Guide for Concrete Floor and Slab Construction”, ACI 302.2R, “Guide for Concrete Slabs that Receive Moisture-Sensitive Flooring Materials,” and ACI 360R, “Guide to Design of Slab on Ground”.

J. Concrete compressive strength shall not be less than 5000 psi at 28 days for precast design.

K. Reinforcing steel conforming to ASTM A615 with a yield strength of 60,000 psi shall be used in the design of all concrete structures.

L. All concrete exposed to earth or weather shall be air entrained.

2.2 Steel Specific

A. Structural steel W shapes shall conform to ASTM A992.

B. Structural steel M and S shapes shall conform to ASTM A36.

C. Structural steel angles, plate and channels shall conform to ASTM A36.

D. Square and rectangular Hollow Structural Sections shall conform to ASTM A500, Grade B, F_y (min)=46 ksi.

E. Round Hollow Structural Sections shall conform to ASTM A500, Grade B, F_y (min)=42 ksi.

F. Pipe shall conform to ASTM A53, Grade B, F_y (min)=35 ksi.

G. Connections should generally be designed for ¾ inch diameter, A325-N high-strength bolts. Design documents shall indicate whether the joints are snug-tight, pretensioned, or slip-critical.

H. Constructability shall be considered in all design.

I. The designer shall attempt to utilize conventional concentrically braced framing in all structural steel building designs. Lateral forces on building should be designed using tension only bracing in only a reasonable number of bents.

J. Metal roof deck should be designed as a diaphragm as part of the lateral load resisting for buildings with plan dimensions aspect ratio (width to length) of 1 to 3 or less.

2.3 Sustainability

A. Except for special architectural concrete, mix designs shall encourage the use of fly ash as a replacement for a portion of the cement.

2.4 Products, Materials, and Equipment

A. The requirements in the CSI specifications shall be used for material and admixtures.

B. Elastomeric link-seal shall be utilized at all outside-underground (water lines) wall/pipe penetrations

2.5 Fermilab specific materials, Inserts and details

A. Channel inserts where required shall be Unistrut® 2200 series or equal with galvanized finish.

B. Grounding for underground enclosures shall use the following electrical design guides.

C. Sealants used in the proximity of radiation from beam-lines shall be comprised of a polyurethane based sealant like “Pourthane” manufactured by W. R. Meadows or equivalent.

3.0 Installation, Fabrication, and Construction

A. The requirements in the CSI specifications shall be used for installation, fabrication and construction

B. If equipment is located on the proposed facility’s roof, fall restraint tie-offs, anchor points, guardrails, within 15 feet of roof edge shall be designed in accordance with ANSI Z359 series.

C. If equipment is located on the proposed facility’s roof, a hoisting device should be provided on the roof to allow a worker to hoist tools and material to the roof.

D. Ladders to vaults/pits to include grab handles beyond the opening.

E. Utility vault covers should be less than 50 lbs., if not in traffic areas.

Version Number	Date	Author	Change Summary
0	11/26/2012	T. Lackowski	Initial Release
1	03/01/2015	J. Niehoff	Revised Section 1.3
2	12/11/2015	A. Vasonis & B. Rubik	Updated reference code, standards, & reference material

Basis of Design

This section applies to the guidance for design of conventional facility mechanical systems, such as, HVAC, associated DDC controls, plumbing, process piping including LCW, ICW, and CHW, process ventilation systems, such as, oxygen deficient hazard (ODH) environments and computer data centers.

1.0 Design Loads/Considerations

A. Conventional: Heating and cooling system design loads shall be determined using ASHRAE Fundamentals
B. Technical: Heat load to air from technical components shall be established by FESS Engineering and/or Project Team.
C. Fermilab's domestic water system is considered an exempt community public water supply, reference FESS Engineering Project No. 3-5-167 and therefore, back flow prevention is only required on process loads.
D. New buildings or modernization over 5,000 gross SF shall be designed to be 30% better than ASHRAE 90.1 to comply with the Guiding Principles for High Performance and Sustainable Buildings.
E. ODH airflow determination are typically performed by Fermilab.

1.1 Applicable Codes/Standards/References

A. American Society of Heating, Refrigerating and Air-Conditioning
   - ASHRAE 15 Safety Standards for Refrigeration Systems
   - ASHRAE 55 Thermal Environmental Conditions for Human Occupancy
   - ASHRAE 62 Ventilation for Acceptable Indoor Air Quality
   - ASHRAE 90.1 Energy Standard for Buildings
   - ASHRAE Guidelines 0 The Commissioning Process
   - ASHRAE Advance Energy Design Guide (AEDG)
   - ASHRAE Handbook HVAC Systems and Equipment
B. AABC National Standards for Total System Balance.
C. ACGIH Industrial Hygiene, Environmental, Occupational Health
D. AWS D 9.1 Welding of Sheet Metal
E. AMCA Standards, Definitions, Terms and Test Codes for Louvers, Dampers and Shutters
F. International Mechanical Code (IMC)
G. All equipment must be listed by a national recognized laboratory, such as UL.
H. Fermilab's ES&H Manual Chapter 5031 Pressure Vessels
I. AMCA 500 – Test Methods for Louvers, Dampers and Shutters
J. ANSI/ASHRAE/IES Standard 90.1 (latest published edition) – Energy Standard for Buildings except Low-Rise Residential Buildings.
K. ANSI/ASHRAE Standard 135-2001: BACnet – A Data Communication Protocol for Building Automation and Control Networks, including all amendments.
L. ANSI/NEMA 250-Enclosures for Electrical Equipment (1000 volts Maximum).
M. ANSI/NFPA 70 – National Electrical Code

N. ANSI/NFPA 90A – Installation of Air-Conditioning and Ventilation Systems.
O. ASHRAE 62.1 – Ventilation for Acceptable Indoor Air Quality.
P. ASHRAE 85 – Automatic Control Terminology for Heating, Ventilating, Air Conditioning.
Q. ASTM D1693 – Environmental Stress – Cracking of Ethylene Plastics.
R. National Fire Protection Association (NFPA) Codes/Standards, but not limited to:
- NFPA 54 National Fuel Gas Code
- NFPA 58, Liquefied Petroleum Gas Code
- NFPA 90A, Installation of Air Conditioning and Ventilating Systems

1.2 Related Sections

A. Facilities Engineering Services Section Design Guide – Electrical Low Voltage
B. Facilities Engineering Service Section Design Guide – Facility Safety

1.3 Design/Construction Documents deliverables (see section 4).

2.0 Design Criteria and Evaluation

2.01 ENVIRONMENTAL

A. 75Fdb/50%RH (cooling) and 68F/no min RH (heating) for offices
B. Project Specific temperatures for conditioned high bays & technical spaces
C. Data Center to follow ASHRAE TC99

2.0.2 VENTILATION

A. Personnel and conventional building (ASHRAE 62.1)
B. Lab system and ODH (Project specific)
C. For fire damper qualities, quantities, and locations, reference the 6.0 Fire Safety design guide.

2.0.3 SUSTAINABILITY/ENERGY

A. Design of new federal buildings will be designed to be 30% better than ASHRAE 90.1using appendix-G of ASHRAE 90.1 (Per 10CFR 433)
B. Preferred Building Energy Modeling software is CDS Trace700. Other software is acceptable provided that both the native file of the software used and CDS Trace shall be submitted.
C. Calculation of energy savings and handling of process load in energy savings calculation shall be in accordance with 10CFR 433
D. Include applicable HVAC mandatory requirement under ASHRAE 90.1- 6.4
E. Specify Water-Sense plumbing product, where available
F. Include Construction IAQ management plan in accordance with Guiding Principle requirement
G. Provide metering of DWS, GAS, CHW, and HWS. If ICW used as process, also consider metering.

2.0.4 COMMISSIONING

A. Provide commissioning documents tailored to the size and complexity of the building and its system components

2.0.5 DDC CONTROLS

A. DDC System Operational and Informational Control Requirements

1. The first requirement of any system controlled by modern instrumentation is that it must work per the sequence of operation.
2. The second requirement is that the instrumentation must supply sufficient information to determine the operational status of all system components.
    a. Air side system coils must have air temperature in and out including relative humidity if moisture removal is part of the system function.
    b. Air flow and balancing dampers are required for all component air streams involved in the system.
    c. Water system (hot or chilled) will have flow measurement, balancing valves and temperature in and out.
    d. Other fluid systems will have flow and differential pressure measurement. This includes systems such as heat exchangers, strainers, and pumps (if VFD controlled for speed, a BAS connection to the VFD Is required).
    e. Other unit operations or specialty equipment must be evaluated from the operational and informational perspective.
3. The third requirement is that all control panels or panels containing some control components that must be accessed by control personnel, will be designed so that the high voltage is separated from the low voltage control equipment so that controls personnel can access the controls without special PPE.
4. The fourth requirement is that a representative of the DDC group is the governing authority for all instrumentation design issues. Hence a DDC representative must be present during the design process meetings and scoping sessions to provide input for the operational and functional working of the control system.

Part Description	**Manufacturer**	**Model Number**	**Comm. Protocol**
Sensor - Air - Temp	JCI	10k thermistor	serial
Sensor - Water - Temp	JCI	10k thermistor	serial
Sensor - Air – DP	Setra	DPT 260	4-20 ma;0 to 5 VDC; 0 to 10 VDC
Switch - Liquid - DP	Penn by JCI	P74	24 v
Sensor - Air - Freeze Stat	JCI	A70 series	24V
Sensor - Air - Space sensor - Adjustable	JCI	NS series	SA Bus
Sensor - Current	Hawkeye	H992,H908,H921,H952	
Sensor - Air - Relative Humidity	Vaisala	HMD60	
Sensor- CO2	Veris	CDLSXX series	

Flow Measuring - Air Station	Ebtron		
Flow Meter – Natural Gas	Onicon	F-5500	N-100 gateway for RS-485 to Modbus TCP/IP
Flow Measuring Flow Tube ICW	Toshiba		
Flow Measuring - Meter - ICW	Onicon	F-3500 with D-100 display	Modbus TCP
Flow Measuring - Meter- Domestic Water	Onicon	F-3500 with D-100 display	Modbus TCP
Valves - Shut Off - Natural Gas	Industry Standard		
Valves - Shut Off - Liquids	Industry Standard		
Valves - Butter Fly- Liquids	Watts or equal	BF-03 for domestic DBF-03	manual shut off application
Valves - Control - Liquids	Belimo/JCI		
Actuators - Control Valves -Electric	Belimo/JCI		
Actuators- Damper- Air Control - Electric	Belimo/JCI		
Controllers - Main - Network Level	JCI	MS-NAE5510-3	BACnet IP/BACnet MSTP
Controllers - Network Level 1 & 2 Combo	JCI	MS-NCE2566-0	BACnet IP/BACnet MSTP
Controllers -Network Level Two with time clock	JCI	MS-FAC3611-0	BACnet MSTP
Controllers -Network Level Two	JCI	MS-FEC2621-0	BACnet MSTP
Controllers - VAV	JCI	VMA1630-0	BACnet MSTP
Controller - IOM Module	JCI	MS-IOM4711-0	BACnet MSTP
Variable Frequency Drive - Pump Control	ABB	ACH550	BACnet MSTP
Variable Frequency Drive - Fan Motor Control	ABB	ACH550	BACnet MSTP
Controller - pH, ORP, Chlorine	Hach	sc200	selectable 4-20ma, 0-10V, other
Transmitters - Electronic - sensor specific	Match Instrument		

Bubblers for level measurement	Waterlog	H350XL-H355combo data logger/pressure	
Bubblers for level measurement Solar	OTT HYDROLAB	CBS 15M (63.200.001.9.24)w/EPS-50 Bubble chamber	
BTU Meters	Onicon	System-10	BacNet
Surge Protector - Power	Transtector	1102-14-43,or7	
Surge Protector - Comm Bus	B&B Electronics	485HESP	RS-422 & RS-485 High Energy
Power Meter w/wave form capture	Schneider Electric	PM8000	Ion and Modbus TCP
Power Meter without waveform capture	Schneider Electric	PM5500	Ion and Modbus TCP
Sensor - Ultrasonic Level Sensor	Flowline		
Sensor - Radar Level Sensor	Micropilot FMR53 depth sensor	Model FMR52-AACCADBOAFK	
Power Supply for Control Panel	Functional Devices		
Dampers -	Tamco		
Chlorine Analyzer	Hach	CL17	4-20ma
Telemetry	Phoenix Contact/Omnex	RF modules	900MHz FHSS 1 watt limit
Chlorine pumps			
Power Generator Sets			Alarm Contact
PLC	Allen Bradley		

2.0.6 ANTIFREEZE Mechanical systems, chilled and hot water coils exposed to freezing conditions shall be provided with antifreeze solutions capable of handling the potential temperatures. Antifreeze shall be non-toxic propylene, as coordinated with FESS FM group. Discharge air monitoring is required downstream of these coils and mixed air temperature. Ethylene solutions are not permitted to be used.

2.0.7 LAYOUT CONSIDERATION

A. This section applies to the design and installation of pipe, pipe fittings, valves, piping accessories and equipment for potable and laboratory hot and cold water, heating water, cooling water, steam and condensate, HVAC equipment, sanitary and storm drains, rainwater leaders, compressed air, vacuum and gases.

B. Design piping to allow for ample movement and flexibility for expansion and contraction due to temperature changes.

C. Provide valves to permit isolation of individual pieces of equipment, individual rooms, individual areas, individual floors, individual risers and individual buildings to permit maintenance, alterations repair and replacement work without shutting down entire systems.

D. Provide valves to isolate each piece of equipment and unions to permit removal.

E. Provide thermowells with thermometers at all locations where fluid mixing or heat transfer occurs.

F. Provide pressure gages at all services entering the building, at pressure reducing valve outlets, pump inlets and outlets, and on other equipment where required for confirming satisfactory operation.

G. Provide pipe sleeves for all piping penetrations through building separations. Provide flood protection in the mechanical rooms and penthouses to prevent water spilled on one floor from traveling to the floor below. Coordinate with the Architect to make sure the curbs and sleeves are installed as part of the floor, not installed after the floor is in place.

H. Provide adequate access to all equipment requiring maintenance or adjustment. Show building access doors on both the mechanical and architectural drawings so they are properly located for maintenance and appearance. Provide equipment access doors with a minimum size of 24 “x 24” unless approved otherwise.

I. Provide access to all equipment with stair, catwalks, and similar fixed access systems. Do not require the need for Lifts or removable ladders unless approved in writing. Show all maintenance spaces clearly on design drawings.

J. Mount equipment, e.g. fans and pumps, on concrete housekeeping pads secured to structural slab. Size concrete pads larger than equipment. Pad shall extend at least ten times the diameter of the mounting bolts past the equipment. Coordinate with Structural Engineer for final design. Smaller equipment may be wall-mounted instead of pad-mounted. Pump and fans shall have adequate vibration isolation to prevent transmission to occupied areas.

K. Provide marine lighting in air unit cabinets to allow unit maintenance and repair without use of flashlights or extension cord lights. Switches to be on exterior of cabinets.

L. Fiberglass liner inside any portion of ventilation systems is not acceptable. Interior lining to be constructed of impermeable, cleanable, closed-cell liner materials. Face-coated fiberglass insulation is not an acceptable product for any portion of ventilation systems including cross-talk silencers. Do not use liner in the outside air intake duct. Existing HVAC systems with fiberglass liner in good condition may be left in place until the entire duct system is renovated.

M. Reduce fan and air noise by the use of sound attenuators, round or oval ducts, where feasible, instead of rectangular, as well as larger ducts and lower RPM fans.

N. Include a statement in the specifications that all components of the ventilation system (e.g. fan, duct, insulation, sound attenuators, terminal boxes, etc.) must be kept clean and dry as manufactured, delivered, stored and installed before operating the HVAC system.

O. Equipment necessary to maintain building heating shall be connected to emergency power. This includes building control systems and generator controls.

P. Adequate service clearance shall be provided around all equipment.

Q. Provide separate pipe headers for sump pumps.

R. Silent check valve water shall be use for pipe size larger than 4” diameter

S. Domestic water Booster pump shall be considered based on incoming pressure

2.1 Products, Materials, and Equipment

A. Aboveground LCW piping shall be 304L Schedule 10 Stainless piping.
B. All A/E firms shall provide complete model numbers for specified equipment.
C. Reference the FESS-Engineering standard mechanical specifications for various types of piping systems.
D. Provide grounding rings on VFD motors.
E. Replace all adjustable sheaves with fix sheaves after commissioning
F. Water treatment program for boilers, chillers, cooling towers shall be developed in conjunction with Lab-established consultant and water treatment provider.
G. Chillers utilizing ICW water shall have coated condensers with no enhanced tubing.

3.0 Installation, Fabrication, and Construction

A. HVAC Equipment maintenance access that does not require program shut-down because of interlocks or radiological area access.
B. Automatic strainers shall have a bypass installed around them for servicing without interruption to the equipment
C. Lifetime-sealed bearings preferred or if not available, grease fittings extended to accessible location must be provided
D. Electronic, PDF format files of all as-built drawings, operating and maintenance manuals, provided at the completion of the project.
E. If application-specific electronic files were used for programming controllers or other devices, copies of the active, fully-commissioned electronic files shall be provided, e.g., PLC device.
F. Branch line isolation valves on utility distribution system should be provided between supply and return devices, e.g., fan coil units.
G. Equipment must be accessible in a maintainable manner and must be reviewed by FESS-Operations during the design process.
H. Air Circulation**:** Network Space shall have a minimum of basic AC vent and return to provide for “office occupied space” conditions.

4.0 Deliverables

DELIVERABLES	Fermilab	DESIGN		CONSTRUCTION (for refrence)		
		AE (60% design document)	AE (90% or 100% design document)	Contractor (shop dwg)	Contractor (actual work & report)	Commissi ning Agent , CxA
Plan, spec and schematics (HVAC, Plumbing)		X	X			
Equipment shedules (HVAC, Plumbing)		X	X			
Sections and Details (HVAC, Plumbing)		partial	X			
Technical Calculations (plumbing, hvac etc)			X			
Energy Model in pdf & Trace archived file format			X			
HPSB & GP (Guiding Principles) required calcs and documentations (incl ASHRAE 62/55)		X	X			
Division -1 spec for HPSB/GP items	X					
IAQ plan during Construction	part of div-1			X		
installation shop drawing / coordination drawing (duct, plumbing, piping)			spec	X		
Building Flushout	part of div-1				X	
Waste management/recycle reports or receipts	part of div-1				X	
Hydrotest			spec		X	
Refrigerant removal report , if applicable			spec		X	
Glycol volume report			spec		X	
System Balancing report.			spec		X	
Equipment Startup			spec		X	
Complete I/O points list as part of the design documents.		X	X	X		
Instrumentation diagram (Use ISA Process Flow Diagram for reference) as part of the design documents.		X	X	X		
Sequence of Operation for the entire control system and must include all set points, ranges of operation, alarm points and ranges as part of the design documents.		X	X	X		
Control elements provided for operational diagnostics for determining single points of failure, equipment states and alarm states as part of the design documents.		X	X			
List of all alarms complete with limits		X	X	X		
Remore displays (rooftop unit)			spec	X	X	
Network communication trunk schematic.		X	X	X		
Functional graphics for each system		X	X	X	X	
Bill of materials.				X		
Commissioning/Functional Performance Test/Commissioning approval of procedure. Witness if desired and presentation of final report.	part of div-1		spec			X
Commissioning manual & Report	part of div-1					X
Editable As-built drawings.			spec	X		
Integration to existing site Metasys BAS system.			spec		X	
Configure all system points (Trends, alarms, descriptions, totalizations, schedules etc.)			spec		X	
Operator Training.			spec		X	

Version Number	Date	Author	Change Summary
0	11/26/2012	E. Huedem	Initial Release
1	03/01/2015	J. Niehoff	Included HPSB, Backflow on processes, and revised section 1.3.
2	12/24/2015	E.Huedem/L.Hammond	Changes to Antifreeze, Metering, and Layout
3	5/10/2017	T. Thorson	Added DDC Controls section
4	12/14/2017	E Huedem	Added mechanical items, updated deliverables

Basis of Design

This section applies to the design of buildings and underground enclosures related to fire safety. No construction or alterations should reduce the level of fire protection or life safety provided by existing condition.

1.0 Scope (Background)

A. Fermilab uses the International Building Code and NFPA 101 Life Safety Code. In addition, Fermilab follows NFPA 30 in lieu of the quantities and limitations set forth by IBC and IFC.

B. Subterranean spaces, reference DOE Standard 1066 for subterranean guidelines.

C. Conceptual Design Reports (CDR) evolving new beam-line enclosures and/or new buildings should be reviewed and the criteria established by FESS Engineering's life safety/fire protection licensed professional consultant. This Life Safety/Fire Protection Design Analysis should be submitted to the laboratory's site Authority Having Jurisdiction (AHJ). All major renovations should be reviewed by the ESH&Q and FESS Engineering's staff.

D. If a proposed facility is handling radioactive materials and deemed necessary by the site AHJ and/or site Radiological Safety Officer (RSO), then a fire protection design/Fire Hazard Analysis should be included in the design documents, reference DOE Standard 1066 for further guidance.

1.1 Applicable Codes/Standards

A. 29 CFR 1910 Occupational Safety & Health Standards - General Industry

B. American National Standard Institute
   - ANSI Z359.1, Safety Requirements for Personal Fall Arrest Systems, Subsystems and Components

C. International Building Code (IBC) (*Typically used to establish Construction Type, Use Group/Occupancy, Area Limitations, etc.)*

D. International Fire Code (IFC) (*Except for quantities and limitations for Flammable/Combustible liquids*)

E. Federal Emergency Management Agency
   - FEMA 453, Safe Rooms and Shelters Protecting People Against Terrorist Attacks
   - Publication P-431, Tornado Protection: Selecting Refuge Area in Buildings

F. National Fire Protection Association (NFPA) Codes/Standards, but not limited to:
   - NFPA 1, Fire Code
   - NFPA 30, Flammable and Combustible Liquids Code
   - NFPA 70, National Electrical Code
   - NFPA 75, Standard for the Fire Protection of Information Technology
   - NFPA 101, Life Safety Code (*Typically used for Means of Egress and Occupancy Separation)*

- NFPA 318, Standard for the Protection of Semiconductor Fabrication Facilitates
- NFPA 520, Standard on Subterranean Spaces
- NFPA 801, Standard for Fire Protection for Facilities Handling Radioactive Materials

G. Fermilab's Environment Safety &Health Manual (FESHM)
- Chapter 6010, Fire Protection Program
- Chapter 6020.3, Storage and Use of Flammable Gases
- Chapter 6020.4, Concepts of Egress
- Chapter 6040.1, Fire Construction Requirements
- Chapter 6040.2, Fire Construction Requirements – Interior Finish Materials
- Chapter 7060, Fall Protection Program

1.2 Related Sections

A. Facilities Engineering Services Section Design Guide – Architectural
B. Facilities Engineering Services Section Design Guide – Mechanical
C. Facilities Engineering Services Section Design Guide – Fire Sprinkler & Fire Alarm
D. Facilities Engineering Services Section Design Guide – Accessibility

1.3 Design/Construction Documents

A. Provide Standard Industry documents.

2.0 Design Criteria and Evaluation

A. Fire hydrants should be spaced 300 feet apart, per NFPA 1. Fire hydrants should be a minimum distance of 40 feet from a building.
B. Oil filled transformers in excess of 500 gallons and up to 5,000 gallons must be 25 feet separation from building or provide a 2 hour fire wall, in accordance with NFPA 70 and NFPA 850.
C. New facilities located at the surface, exceeding 5,000 sq. ft. of floor area should be a minimum of Type IIB, construction type as defined by IBC. In addition, facilities exceeding 5,000 sq. ft. should be provided with automatic fire suppression system, reference DOE Standard 1066.
D. Dry transformers should be used in doors. Dry transformers over 112.5kw require 1 hour fire rated room with self-closing door, in accordance with NFPA 70 Article 450.21.
E. Electrical room(s) serving more than 800 amps, exit door swings out with panic hardware or similar mechanism, in accordance with NFPA 70, Article 110.26.(c) (3).
F. Delayed egress locks are allowed, in accordance with NFPA 101, in such cases as computer rooms, should unlock within 30 seconds form manual release mechanism. Security locks must unlock upon fire alarm activation to allow Fire Department personnel entrance.
G. Labyrinths should be a minimum of 2 hour fire rated construction with 44 inches in width.
H. Curtain Walls should comply with NFPA 286, Standard Methods of Fire Test for Evaluating Contribution of Wall and Ceiling Interior Finish to Room Fire Growth.

I. Building roof material should be Class A, in accordance with NFPA 256, Standard Methods of Fire Test of Roof Coverings.

J. Interior finish material should have a flame spread rating of 25 or less and a smoke development rating of 450 or less, reference FESHM 6040.2.

K. At the discretion of the Fermilab's Fire Department, building door numbering may be required, reference FESHM 6020.4.

L. Experimental Halls should be provided with a means of smoke ventilation at the roof. Ventilation hatch fusible links should be rated 300°F, so not interfere with the operating temperature of the automatic sprinklers. Reference sketch FPME-6.

M. Rooms or spaces that are classified as Assembly Occupancy should be posted with maximum occupant load.

N. Elevator firefighter's operational controls and Elevator Key box should be keyed alike in accordance with ASME A17.1.

O. Elevators for passengers serving 3 stories or less, reference sketch FPME-7. For higher stories, must consult with Fermilab Fire Department.

P. Typically building codes and NFPA standards do not require fire dampers in 1 hour fire rated walls, except for shaft enclosures and it is desirable to minimize the quantity and location of fire dampers, reference FESS Engineering Project No. 13-1-48.

Q. Where required during the design process, fall protection anchorage shall be designed to withstand 5,000 pounds in accordance with ANSI Z359 series.

R. Where required during the design process, safe room and/or shelter shall be defined in accordance with the FEMA publications.

S. All electronic locks, locking system and components should be UL listed.

T. Commercial emergency power off systems should be provided in network/computer rooms over 500 sq. ft., in accordance with Memorandum dated July 2011, attached herein.

U. The following tables are an overview of occupancy naming conventions and travel distance derived from NFPA 101 Table A7.5.6 & IBC Table 1016.1 and is summarized for guidance in determining the occupancy classification.

IBC, 2015 – Chapter 3	NFPA 101, 2015
Assembly Use Group A1 – Theater A2 – Dance Halls, Night clubs, Restaurants A3 – Amusement , Bowling Aisles, Worship A4 – Swimming Pools, Tennis Courts A5 – Outdoor Assembly, e.g., Stadiums	Assembly Use Group Multipurpose Assembly Day Care Detention and Correctional Health Care / Ambulatory Health Worship / Restaurant
Use Group B (Business)	Business
Use Group E (Educational) Day Care >2.5 yrs.	Educational
Use Groups I-1 through I-4 (Institutional)	Dormitory / Hotels
Use Group F-1 (Moderate Hazard Factory Industrial) Use Group F-2 (Low Hazard Factory Industrial)	Industrial General Industrial High Hazard Industrial Special Purpose
Use Group M (Mercantile)	Mercantile
Use Group R-1 through R-4 (Residential)	Residential / Board and Care / Day Care
Use Group S-1 and S-2 (Storage)	Storage (low & Ordinary Hazard)
High Hazard H1 – Pose a detonation hazard H2 – Pose a deflagration hazard H3 – Pose a combustible or physical hazard H4 – Pose a health hazard H5 – Production materials hazard	High Hazard (such as flammable liquids.)
Use Group U (Utility & Miscellaneous) 406.1.1	

V. Overview of naming and classifications: (NFPA 101 Table A7.5.6 & IBC Table 1016.1)

IBC 2015 NFPA 101, 2015	MIN. WIDTH CORRIDORS	TRAVEL DISTANCE	COMMON TRAVEL	DEAD END
Business Use Groups (B)	44-inches	200-Ft / 300-Ft*	75Ft / 100Ft*	20Ft / 50Ft*
F-1 & S-1 (industrial General *& Storage Ordinary Hazard)	36-inches If <50 occupants	200Ft/250Ft*	75Ft /100Ft*	20Ft / 50Ft*
F-2, S-2, & U (Industrial Special & Storage Low Hazard)	36-inches If <50 occupants	300FT/400FT*	75Ft /100Ft*	20Ft / 50Ft*
H-1 *(Must be Sprinklered)*	44-inches	75Ft *	25 Ft*	0
H-2 *(Must be Sprinklered)*	44-inches	100 Ft*	25 Ft*	0
H-3 *(Must be Sprinklered)*	44-inches	150Ft*	25 Ft*	0
H-4 *(Must be Sprinklered)*	44-inches	175Ft*	75 Ft *	0
H-5 *(Must be Sprinklered)*	44-inches	200Ft *	75 Ft*	0
Lodging & Rooms Hotels/Dorms	36-inches 44-inches	75Ft / 100Ft*	75Ft / 100Ft*	20Ft

** Fully supervised sprinklered building and/or smoke tight corridors*
Notes: 24-inches for access to and utilization of electrical, mechanical, or plumbing systems
Note: 36-inches if 50 or less occupants

2.1 Products, Materials, and Equipment

A. None

3.0 Installation, Fabrication, and Construction

A. Install according to manufacturer's recommendations/instructions and standard "trade" industry practices.

3.1 Typical Sketch Details

FPME-1	EQUIPMENT ACCESS
FPME-2	INDUSTRIAL (IBC) STAIR HANDRAIL
FPME-3	INDUSTRIAL (OSHA) STAIR HANDRAIL
FPME-4	PUBLIC STAIR HANDRAIL
FPME-5	STAIR & LAYRINTH
FPME-6	COMBINATION HEAT/SMOKE VENT
FPME-7	ELEVATOR PLAN VIEW

Version Number	Date	Author	Change Summary
0	11/26/2012	J. Niehoff	Initial Release
1	02/25/2013	J. Niehoff	Added Smoke Roof Vent, Elevator Sketch, & omitted ADA
2	01/30/2016	J. Niehoff	Added ANSI Fall Protection & FEMA Shelter Guidance, & NFPA 286

APPENDIX

Engineering
Facilities Engineering Services Section
630.840.3856 (phone)
630.840.4980 (fax)

Memorandum

July 5, 2011

To: Mike Utes, Chair of Electrical Safety Subcommittee
James Priest, Chair of Fire Hazard Subcommittee, and site AHJ

From: Jim Niehoff, FESS-Engineering

Subject: **Emergency Power Off System Requirements**
FESS Engineering Project No. 10-5-75

This memorandum will serve as a formal request to the Electrical Safety Subcommittee to provide concurrence on FESS-Engineering's approach to Information Technology Equipment rooms and to recommend that the subcommittee to evaluate and provide recommendations on the use of emergency power off systems.

Reference Codes/Standards

- DOE Order 420.1B, Facility Safety, 2005
- IBC, International Building Code, 2009
- NFPA 70, National Electrical Code, 2011
- NFPA 72, National Fire Alarm and Signaling Code, 2010
- NFPA 75, Standard for Fire Protection of Information Technology Equipment, 2009
- NFPA 76, Standard for Fire Protection of Telecommunications Facilities, 2009

Background

The history of the emergency power off switch dates back to 1959, when a fire in the Air Force's Statistical Agency's computer room located in the Pentagon, burned for more than 4-hours without being detected[1]. It scorched 4,000 square feet and caused more than $30 million in property damage. The fire was fueled by magnetic tape and there were no automatic sprinklers, fire/smoke detection, or gaseous agent fire extinguishing systems present. As a result, the US Congress went to the National Fire Protection Association (NFPA) and requested new rules to be developed for protecting computer rooms[2]. To that end, in 1962 NFPA published NFPA 70 Section 7301 stating:

> *..Controls for disconnecting means provided as a part of the main service wiring supplying the electronic computer equipment shall be located near the operator's console and next to the main exit door to readily disconnect power to all electronic equipment in the electronic computer area and to the air conditioning system.*

This evolved into a disconnecting means for information technology equipment or as the industry commonly refers to, an emergency power off (EPO) system. Since its introduction into the national electrical code, an environment has developed by the fire service professionals and first responders considering EPO systems as a life-saving measure, a kill switch at the door. A supplement meeting was held with Fermilab's Fire Department on June 8, 2011, confirming their preference of EPO systems in Information Technology Equipment Rooms.

Over the past year and half, Fermilab has experienced three incidents involving power disruption to computer rooms. As result of these power disruptions it was apparent that the Emergency Power Off (EPO) systems were not integrated properly into the power systems serving the computer rooms. For discussion purposes, the contents of computer rooms are defined as:

- Data Center
- Robotic Tape Storage

Contents of Telecommunication rooms are:

- Network
- Broadband
- Telephone Switching

Code Analysis

There is no building code referencing standards NFPA 75 or NFPA 76. However, DOE Order 420.1B requires all applicable NFPA codes/standards be met. In addition, FESHM 6015 requires an insurance approach to protecting Fermilab's facilities, commonly known as Highly Protective Risk (HPR). This approach would also include these standards. Finally, the National Electrical Code (NFPA 70) Article 645.10 references emergency shutoff in rooms containing Information Technology Equipment as defined by NFPA 75. To that end, FESS-Engineering has designed and constructed computer rooms and telecommunication rooms (network rooms) under the guidance of NFPA 75 and NFPA 76. NFPA 75, Chapter 10 related to building utilities states:

> ***10.4.8 Disconnecting Means.*** *An approved means shall be provided to disconnect power to all electronic equipment in the information technology equipment room or in designated zones within the room. There shall also be a similar approved means to disconnect the power to all dedicated HVAC systems serving the room or designated zones and shall cause all required fire/smoke dampers to close. The control for these disconnecting means shall be grouped and identified and shall be readily accessible at the principal exit doors. A single means to control both the electronic equipment and HVAC systems in the room or in a zone shall be permitted. Where a pushbutton is used as a means to disconnect power, pushing the button in shall disconnect the power. Where multiple zones are created, each zone shall have an approved means to confine fire or products of combustion to within the zone.*

The current work smart set, FESHM 1070 references NFPA 70, 2005 Edition and Article 645.10 of that edition states:

> ***645.10 Disconnecting Means****. A means shall be provided to disconnect power to all electronic equipment in the information technology equipment room. There shall also be a similar means to disconnect the power to all dedicated HVAC systems serving the room and cause all required fire/smoke dampers to close. The control for these disconnecting means shall be grouped and identified and shall be readily accessible at the principal exit doors. A single means to control both the electronic equipment and HVAC systems shall be permitted. Where a pushbutton is used as a means to disconnect power, pushing the button in shall disconnect the power.*

NFPA 70 and NFPA 75 have similar requirements for Information Technology Equipment, i.e., Computer Rooms. The data center industry has been very concerned with EPO systems and the following is an excerpt from a web article discussion with Richard Sawyer, Strategist, HP Critical Facilities Services, published in 2007[5]:

> *"There isn't much good about EPO today," said Sawyer, citing the many instances in which the buttons have figured in outages. "The EPO represents a single point of failure. We are getting more dependent as a culture on data centers. People can get killed and lives ruined by data center failures today."*
>
> *Sawyer shared data compiled by UPS vendors help quantify the extent of data center failures connected with the emergency power off button. One vendor reported 20 EPO related incidents between January 2002 and June 2003, representing 13% of all UPS failures during that time. Another UPS vendor's study found that 26% of all human error failures were caused by the EPO, often in scenarios involving vendors, delivery persons or cleaning crews.*

<u>Computer Rooms and Code Requirements</u>

In July 2010, the data center industry was successful in changing the National Electrical Code to allow the omission of an emergency power off system. The new NFPA 70 (NEC) 2011 Edition revised Article 645.10 is as follows.

> ***645.10 Disconnecting Means.*** *An approved means shall be provided to disconnect power to all electronic equipment in the information technology equipment room or in designated zones within the room. There shall also be a similar approved means to disconnect the power to all dedicated HVAC systems serving the room or designated zones and shall cause all required fire/smoke dampers to close. The disconnecting means shall be implemented by either (A) or (B).Exception: Installations qualifying under the provisions of Article 685.*
>
> ***A Remote Disconnect Controls.*** *(1) Remote disconnect controls shall be located at approved locations readily accessible in case of fire to authorized personnel and emergency responders. (2) The remote disconnect controls for the control of electronic equipment power and HVAC systems*

shall be grouped and identified. A single means to control both systems shall be permitted. (3) Where multiple zones are created, each zone shall have an approved means to confine fire or products of combustion to within the zone. (4) Additional means to prevent unintentional operation of remote disconnect controls shall be permitted.

Informational Note: *For further information, see NFPA 75-2009, Standard for the Protection of Information Technology Equipment.*

B Critical Operations Data Systems. *Remote disconnecting controls shall not be required for critical operations data systems when all of the following conditions are met:*
(1) An approved procedure has been established and maintained for removing power and air movement within the room or zone.
(2) Qualified personnel are continuously available to meet emergency responders and to advise them of disconnecting methods.
(3) A smoke-sensing fire detection system is in place.
(4) An approved fire suppression system suitable for the application is in place.
(5) Cables installed under a raised floor, other than branch-circuit wiring and power cords installed in compliance with 645.5(D)(2) or (D)(3), or in compliance with 300.22(C), 725.154(A), 770.113(C) and Table 770.154(a), 800.113(C) and Table 800.154(a), or 820.113(C) and Table 820.154(a).

Informational Note: *For further information, see NFPA 72-2010, National Fire Alarm and Signaling Code.*

645.11 Uninterruptible Power Supplies (UPSs).*Except for installations and constructions covered in 645.11(1) or (2), UPS systems installed within the information technology equipment room, and their supply and output circuits, shall comply with 645.10. The disconnecting means shall also disconnect the battery from its load.*
(1) Installations qualifying under the provisions of Article 685
(2) Power sources limited to 750 volt-amperes or less derived either from UPS equipment or from battery circuits integral to electronic equipment

The upcoming release of NFPA 75, 2012 Edition, Section 10.4.8 has adopted the same language found in the current NEC Article 645.10.

Unique Situations

Fermilab occasionally constructs network rooms and data centers with dual power sources. Many computer equipment manufacturers provide dual redundant power inputs. A simplified diagram is provided below.

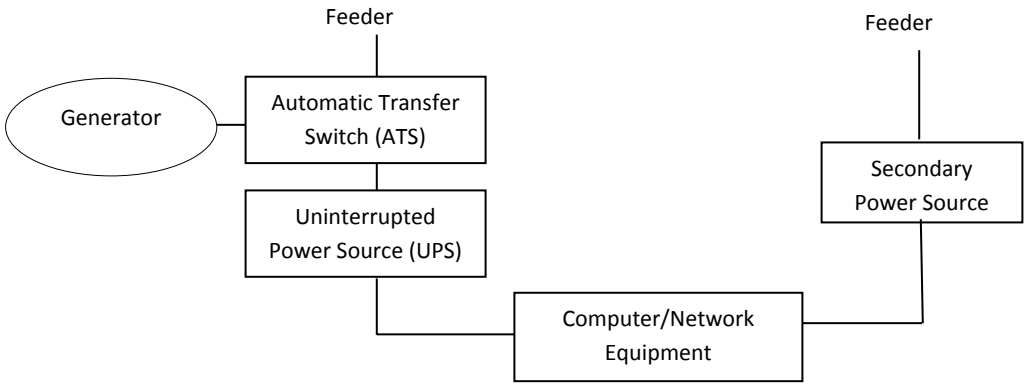

This presents a challenge for installation of a proper EPO system. In older data centers at Fermilab containing EPO systems, design standards in place at the time of these legacy data centers, integrated the gaseous agent fire extinguisher systems to include disablement of the HVAC units, but not necessarily de-energizing the power to the HVAC unit. The EPO systems would also de-energized the primary power source and not necessarily the secondary power source. The following table describes the data center/computer rooms here at the lab (Table 1).

Table No. 1

FIMS No.	Location	Automatic Sprinkler System	Smoke Detection	Gaseous Agent Fire Extinguisher system	EPO System
003	FCC - Tape Vault Mezz	Yes	Yes	Yes(1)	No
003	FCC – 2nd Floor	Yes	Yes	Yes(2)(3)	Yes
003	FCC – 3rd Floor	Yes	Yes	No	Yes
212	Cross Gallery - Main Level Mac Room	Yes	Yes	Yes	Unknown
212	Cross Gallery -Lower Level Mac Room	Yes	Yes	Yes	Unknown
212	Cross Gallery - Lower Level FIRUS Room	Yes	Yes	No	Unknown
628	GCC – Computer A	Yes	Yes	No(3)	Yes
628	GCC – Computer B	Yes	Yes	No	Yes
628	GCC – Computer C	Yes	Yes	No	Yes
628	GCC – Computer D	Yes	Yes	No	Yes
700	LCC Computer Rm 107	Yes	Yes	No	Yes
700	LCC Computer Rm 108	Yes	Yes	No	Yes
806	ICB Main Level	Yes	Yes	Yes(4)	No

(1) *Inergen gaseous fire extinguisher system in robotic tape silos*
(2) *Under floor halon gaseous fire extinguisher system*
(3) *FM-200 gaseous fire extinguisher system in robotic tape silos*
(4) *FM-200 gaseous fire extinguisher system throughout the computer space*

Telecommunication Rooms and Code Requirements

NFPA 76, Standard for the Fire Protection of Telecommunications Facilities, 2009 Edition, Section 3.3.9 defines Telecommunications as the transmission, receiving, switching, and management of signals, such as electrical, optical, or electromagnetic, by wire, fiber, or through the air. Section 3.3.10 defines telecommunications facility as a building or portion of a building that includes telecommunications equipment area and support area. In addition, Section 3.2.12 includes voice communication using internet protocols (VoIP).

Fermilab has numerous small rooms that contain data switching such as the south ends of Wilson Hall, Lab BEG Network Room, Site 39 Network Room, etc. NFPA 76 excludes rooms (closets) less than 500 square feet, therefore the individual network closets are exempt from this document. However, the network rooms at FCC (HACC), WH 8W Fiber Hub, and GCC Network Room A and B are greater than 500 sq. ft., but less than 2,500 sq. ft; thereby, negating the requirement for a smoke management system. Typically, telecommunications require compartmentation and early warning type smoke detection, such as air sampling.

The National Fire Protection Handbook states[5]:

> *On first examination, modern digital telecommunications equipment resembles modern computers or data processing equipment. Although there are similarities, a number of important differences exist. One of the most significant differences is the type of information processing performed. Telecommunications systems do not store or process customer data; it merely transfers data from point A to point B. In a disruption, all information in transit is lost, and the ability to transmit information ceases. In contrast, data processing systems generally process information stored in the system's memory subsystems. In a disruption, current memory may be lost, along with any calculation results that have not been placed in permanent memory. However, all stored information remains in the storage media… Emergency power off (EPO) switches may be appropriate for certain configurations of electronic data processing systems, such readily available means to kill power to telecommunications equipment would cause abrupt end to 9-1-1 and other critical community-oriented emergency services. Therefore, the telecommunications industry avoids the use of EPO switches.*

Historically, telecommunications equipment was DC and the conversion from AC to DC took place outside the equipment, which was viewed as less hazardous. However, with the advent of broadband, NFPA 76 was revised to include signal processing equipment which consists of switch/transport access equipment, servers, routers, and computers; thereby, allowing AC power.

To that end, NFPA 76 Section 6.5.1 requires a means to disconnect power from building services equipment, power and lighting circuits, and telecommunications equipment shall be identified for incident intervention. In addition, Section 6.5.2 states that power distribution/disconnect equipment with appropriate marking shall be permitted to be used as a means to disconnect power. The Appendix clarifies this requirement by stating to provide a procedure and any necessary marking of disconnect equipment to remove all sources of power from specific equipment or building area that could be

electrically overloaded or involved in a fire incident. The Appendix further states that the intent is not to provide an emergency power off capability as required by NEC Article 645.10. Table 2 indicates the network rooms, it excludes telecommunications/network rooms (closets) less than 500 square feet.

Table No. 2

FIMS No.	Location	Automatic Sprinkler System	Smoke Detection	Gaseous Agent Fire Extinguisher system	EPO System
001	WH 8W Fiber Optic Hub	Yes	Yes	No	Yes
003	FCC – 2nd (West) (1)	Yes	Yes	Yes	
003	FCC – 3rd Floor Network Rm	Yes	Yes	No	No
628	GCC – Network Rm A	Yes	Yes	No	No
628	GCC – Network Rm B	Yes	Yes	No	No

(1) Network racks are located in the FCC computer room and have redundant power sources

For the purposes of this request, Control Rooms Cross Gallery Main Control Room, AP-50, IB-1, CDF, D-Zero, EOAC network area, WH Comm Center, WH LHC, and WH-12 MINOS are not defined as computer rooms or network rooms, since they are normally occupied and are considered critical operations. In addition, this request excludes existing abandon control rooms such as Lab E.

Recommendations:

It is requested that the Electrical Safety Subcommittee review the existing computer/telecommunication (network) rooms and provide guidance to future construction related to:

1. New data centers/computer rooms will be designed in accordance with NFPA 70, 2011 Article 645.10(A) and/or 645.10(B). The Fire Safety's Authority Having Jurisdiction (AHJ) would have to be consulted in order for a data center/computer to be classified as critical as delineated in NFPA 70, 2011 Article 645.10(B). Verify that there is a primary means to disconnect the Critical Operation room's power and clearly labeled and documented.
2. In the past, EPO systems were not installed in network rooms. New telecommunication (network) rooms over 500 square feet will be provided with an EPO system, unless the Fire Safety AHJ concurs that the room is classified as critical and therefore, EPO system will not be installed. In such cases, appropriate signage and documentation will be provided indicating the sources of power.
3. Concurrence on the existing Fermilab's network rooms defined as telecommunications rooms less than 500 square feet, as presented in this paper, and the omission of EPO systems in such rooms.
4. All new EPO systems will be of a commercial control equipment type, such as Fike's Emergency Power Shutdown Management System, and monitored by the building's fire alarm system or Fermilab's site-wide FIRUS monitoring system.
5. Existing computer rooms and telecommunication (network) areas EPO systems should be evaluated and documented. The goal should be to comply with NFPA 70, 2011 Edition. A report with recommendations should be prepared for the computer rooms and network areas by an outside consultant under the review and concurrence by the Electrical Safety Subcommittee. In addition, this report should identify the non-compliance rooms and forward the information to the Fire Department in order to allow for adequate precautions for response in the event of an incident.

cc: A. Walters, CD
R. Ortgiesen, FESS
K. Collins, FESS
M. Bonkalski, FESS
S. Dixon, FESS/E
R. Wielgos, FESS/E
J. Steinhoff, FD
C. Kuhn, FD

References

1. Pentagon Fire -1959, published February 11, 2005 at: http://www.arlingtonfirejournal.blogspot.com
2. Data Center EPO Vulnerability Fixed in 2011 National Electrical Code, Published November 5, 2010 by Matt Stansberry. http://searchdatacenter.techtarget.com
3. Averting Disaster with the EPO Button, Published May 7, 2007 at: http::://www. datacenterknowledge.com
4. Department of Energy Handbook Electrical Safety, 2004 Edition
5. 20th Edition of Fire Protection Handbook, 2008

Attached: White Paper, Communications Cable & Connectivity Assoc., November 4, 2010

FERMILAB	SECTION	PROJECT	SERIAL/CATEGORY	PAGE
	FESS			FPME-1

SUBJECT

MEANS OF EGRESS - EQUIPMENT ACCESS
FIRE PROTECTION - DESIGN GUIDES

NAME: **WAI LI / J. NIEHOFF**

DATE: **11-26-2012** REVISION DATE: **07-11-12**

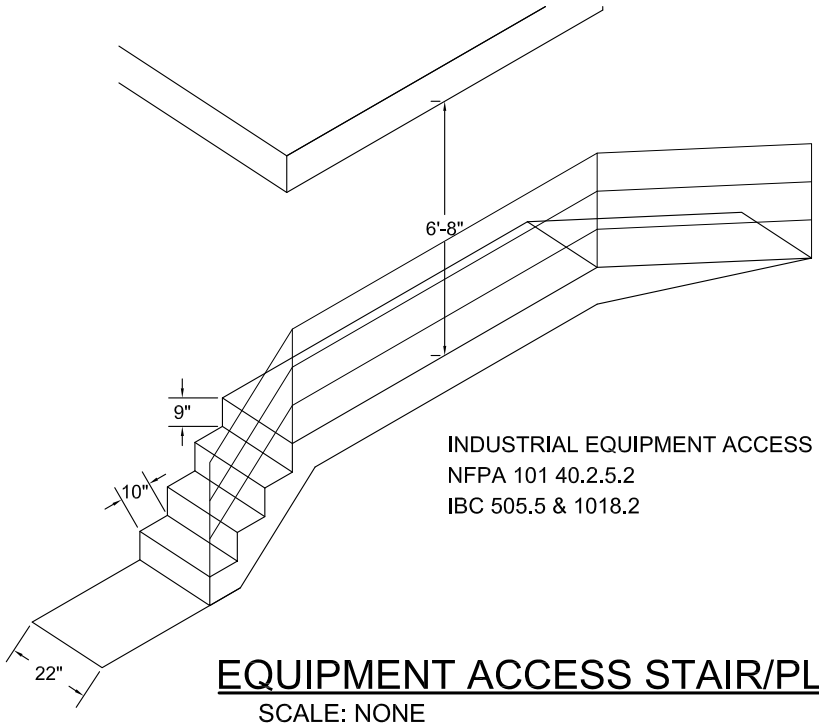

INDUSTRIAL EQUIPMENT ACCESS
NFPA 101 40.2.5.2
IBC 505.5 & 1018.2

EQUIPMENT ACCESS STAIR/PLATFORM

SCALE: NONE

--
--

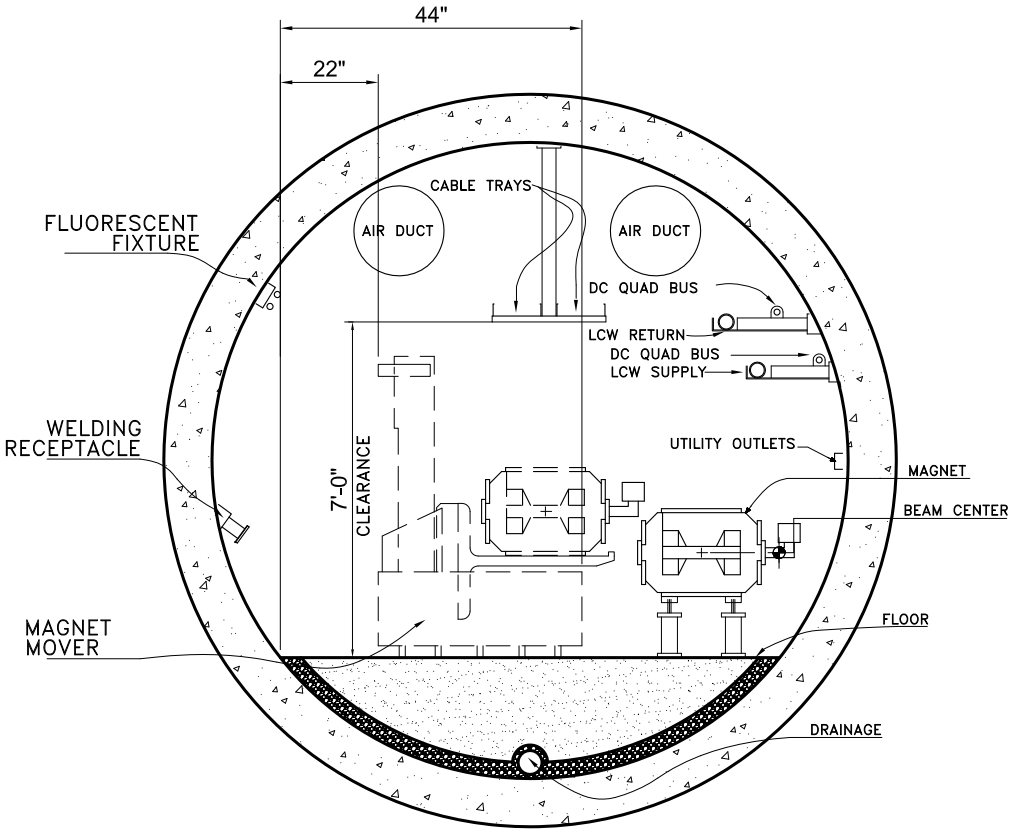

ENCLOSURE/TUNNEL EQUIPMENT ACCESS

SCALE: NONE

--
--

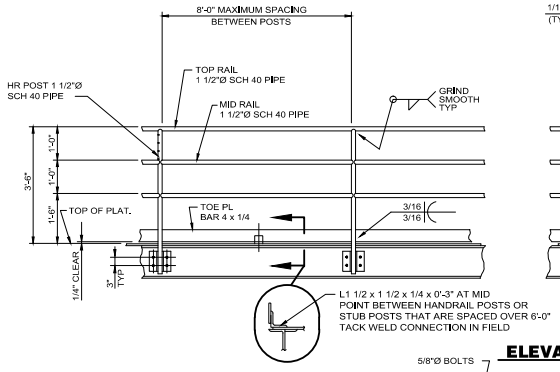

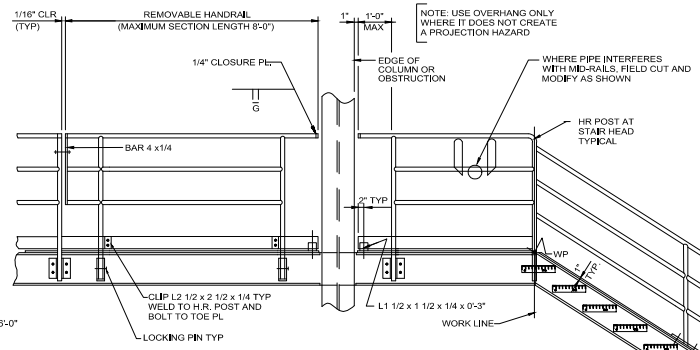

ELEVATION AT PLATFORM

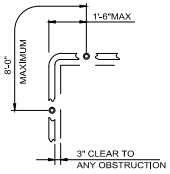

PLAN
TYPICAL HANDRAIL CORNER

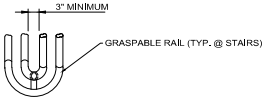

PLAN AT TOP RAIL @ STAIR

PLAN AT MIDRAIL

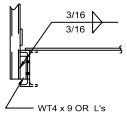

AT BEAM OR
TOE OF CHANNEL

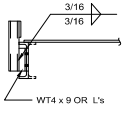

STUB POST WHERE
TOE PL IS ONLY REQ'D

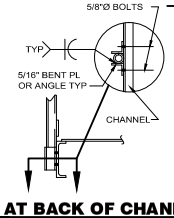

AT BACK OF CHANNEL

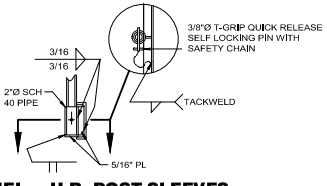

H.R. POST SLEEVES

HANDRAIL POST CONNECTIONS

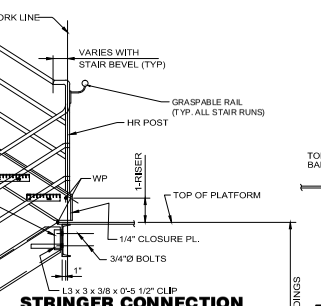

STRINGER CONNECTION
AT BACK OF CHANNEL

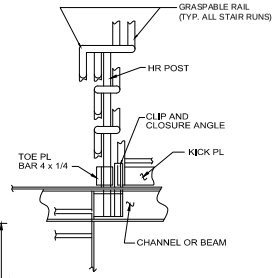

FRONT ELEVATION

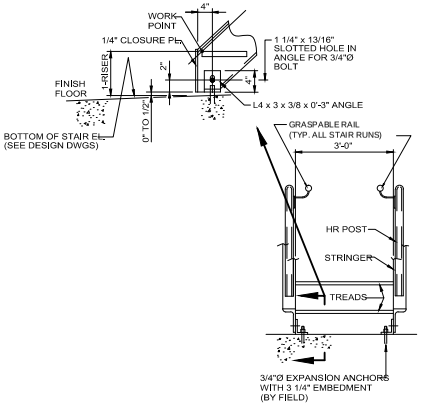

FRONT ELEVATION

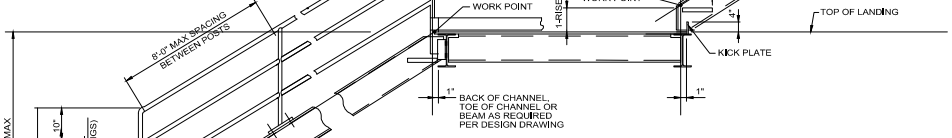

INTERMEDIATE LANDINGS

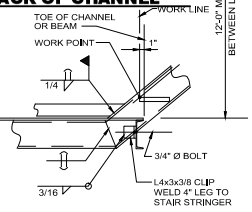

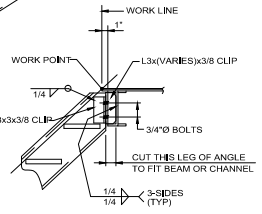

AT BEAM OR
TOE OF CHANNEL

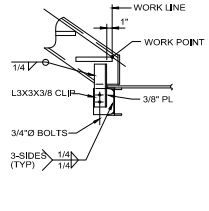

AT BEAM OR
TOE OF CHANNEL

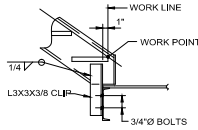

AT BACK OF CHANNEL

STRINGER CONNECTIONS

NOTES:

1. FABRICATE AND SHIP STAIRS AND HANDRAIL IN SECTIONS AS LONG AS PRACTICAL.
2. PREFERRED RISER = 7 " AND PREFERRED TREAD = 11" UNLESS NOTED OTHERWISE.
3. STAIR STRINGERS SHALL BE AS NOTED ON DESIGN DRAWINGS.
4. ALL HANDRAIL AT STAIRS SHALL HAVE A ADDITIONAL GRASPABLE TOP RAIL PER THE 1999 BOCA NATIONAL BUILDING CODE .

INDUSTRIAL STIAR-2 IBC
DESIGN GUIDES **FPME-2**

FERMILAB	SECTION	PROJECT	SERIAL/CATEGORY	PAGE
				FPME-3

SUBJECT

MEANS OF EGRESS - OSHA GENERAL INDUSTRIAL
FIRE PROTECTION - DESIGN GUIDES

NAME: **WAI LI**

DATE: **11-26-2012**

REVISION DATE:

RAILS SHOULD BE TOP-MOUNTED
OR SIDE MOUNTED FOR INSTALLATION
AND TOP RAIL SHOULD WITHSTAND 200lbs

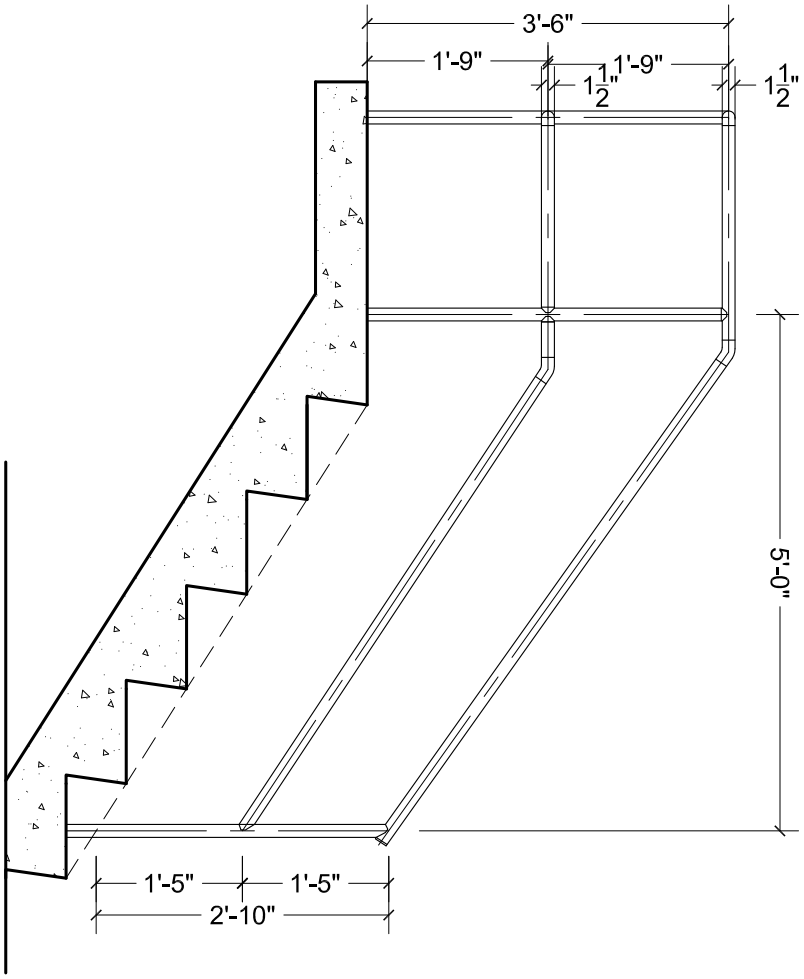

ELEVATION VIEW
Scale: None

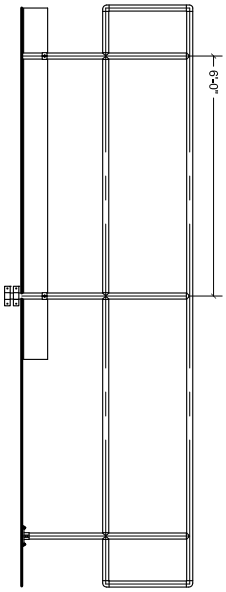

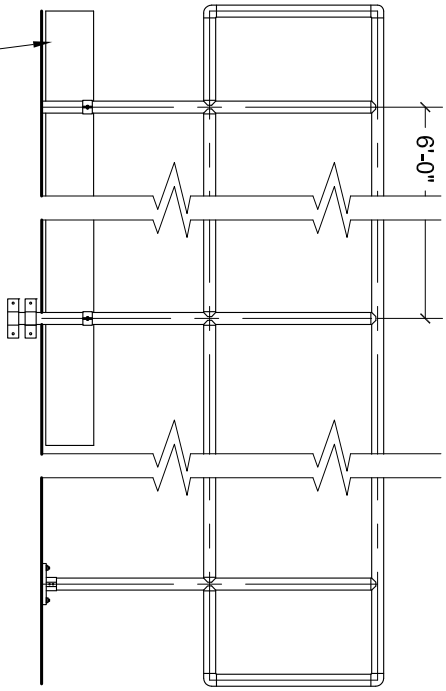

TOEBOARD AS REQUIRED

FERMILAB	SECTION	PROJECT	SERIAL/CATEGORY	PAGE
				FPME-4

SUBJECT

MEANS OF EGRESS - IBC STAIRS
FIRE PROTECTION - DESIGN GUIDES

NAME: **WAI LI**

DATE: **11-26-2012**

REVISION DATE:

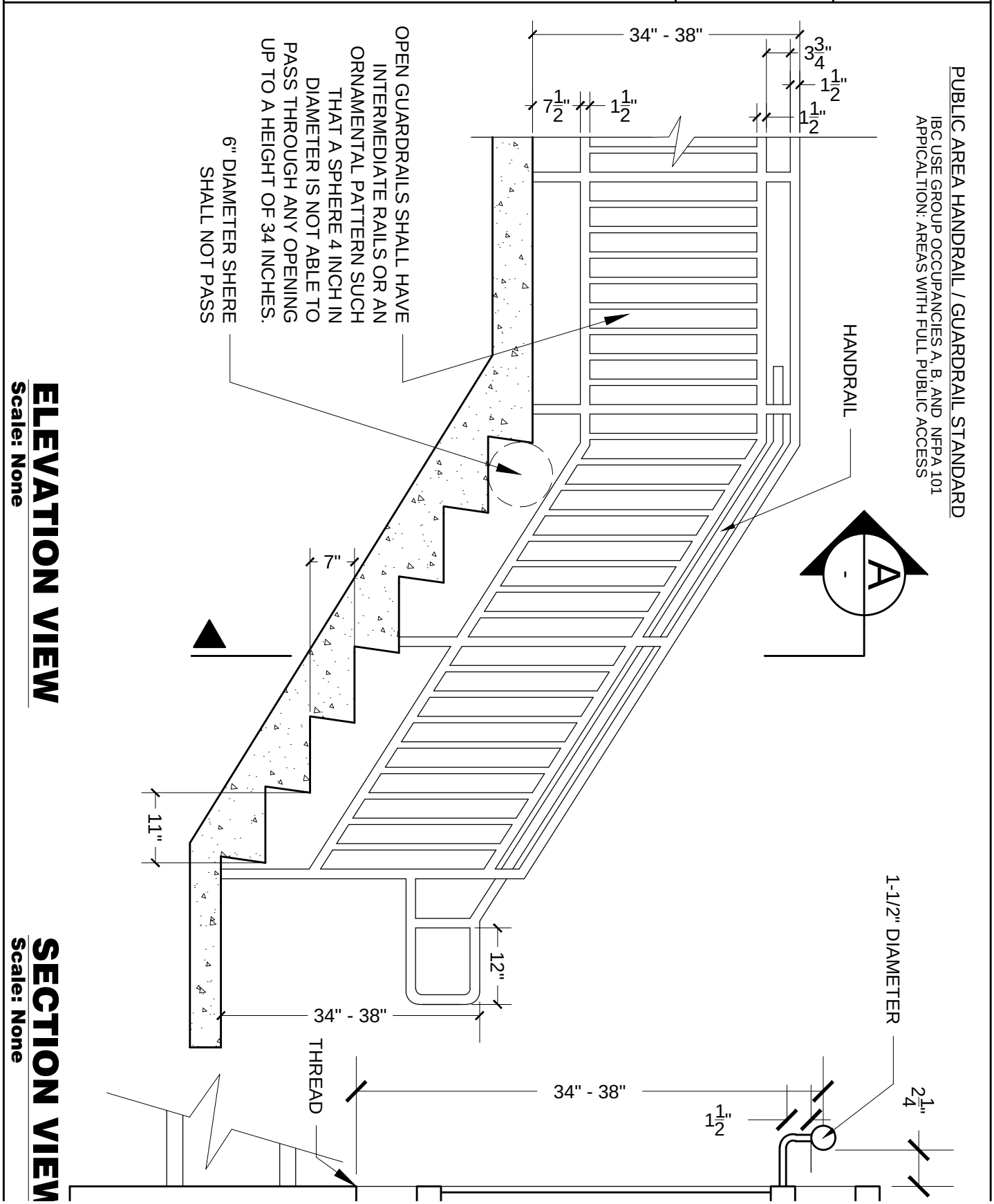

FERMILAB	SECTION	PROJECT	SERIAL/CATEGORY	PAGE
	FESS			FPME-5

SUBJECT

MEANS OF EGRESS - STAIR & LAYRINTH ACCESS
FIRE PROTECTION - DESIGN GUIDES

NAME: **WAI LI / J. NIEHOFF**

DATE: **11-26-2012**

REVISION DATE:

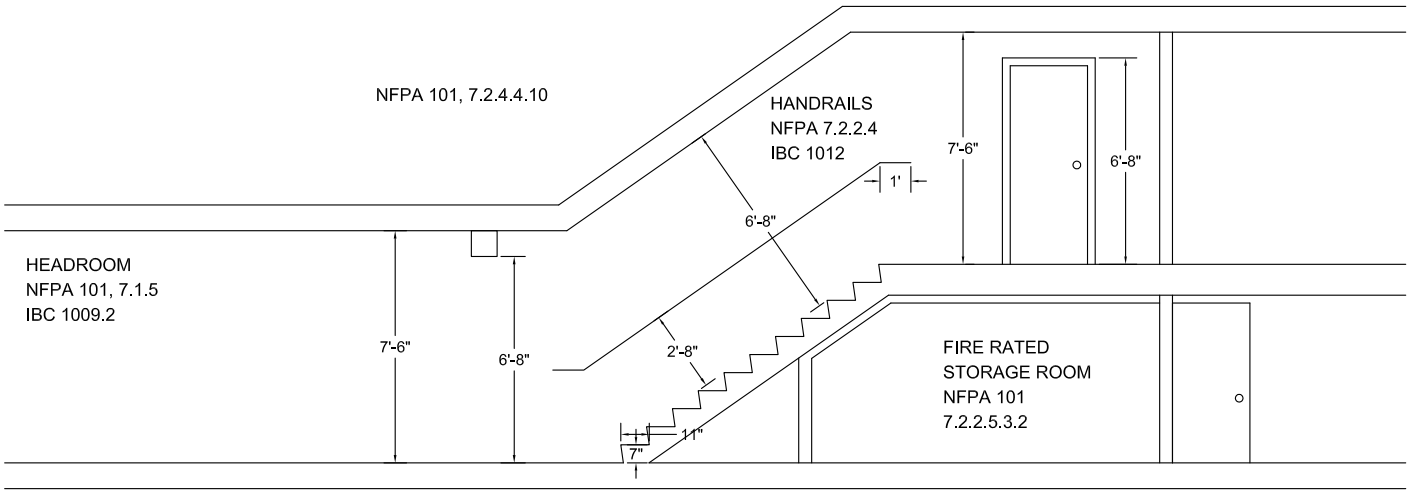

STAIRWELL

SCALE: NONE

--
--

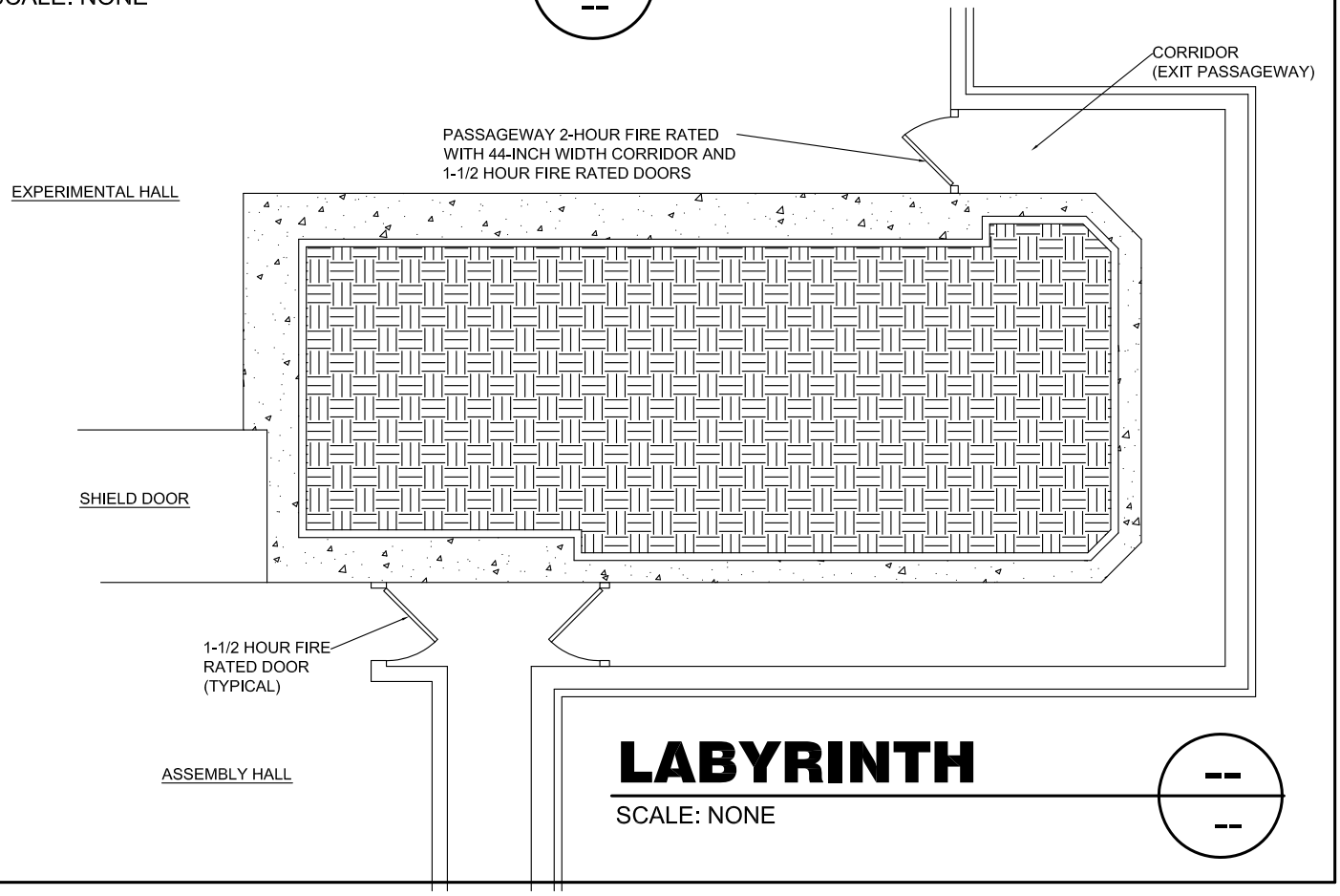

LABYRINTH

SCALE: NONE

--
--

FERMILAB ENGINEERING NOTE	SECTION	PROJECT	SERIAL/CATEGORY	PAGE
	FESS			**FPME-6**

SUBJECT

FACILITY FIRE SAFETY - SMOKE VENT
FIRE PROTECTION - DESIGN GUIDES

NAME: **J. NIEHOFF**

DATE: **02-25-2013**

REVISION DATE:

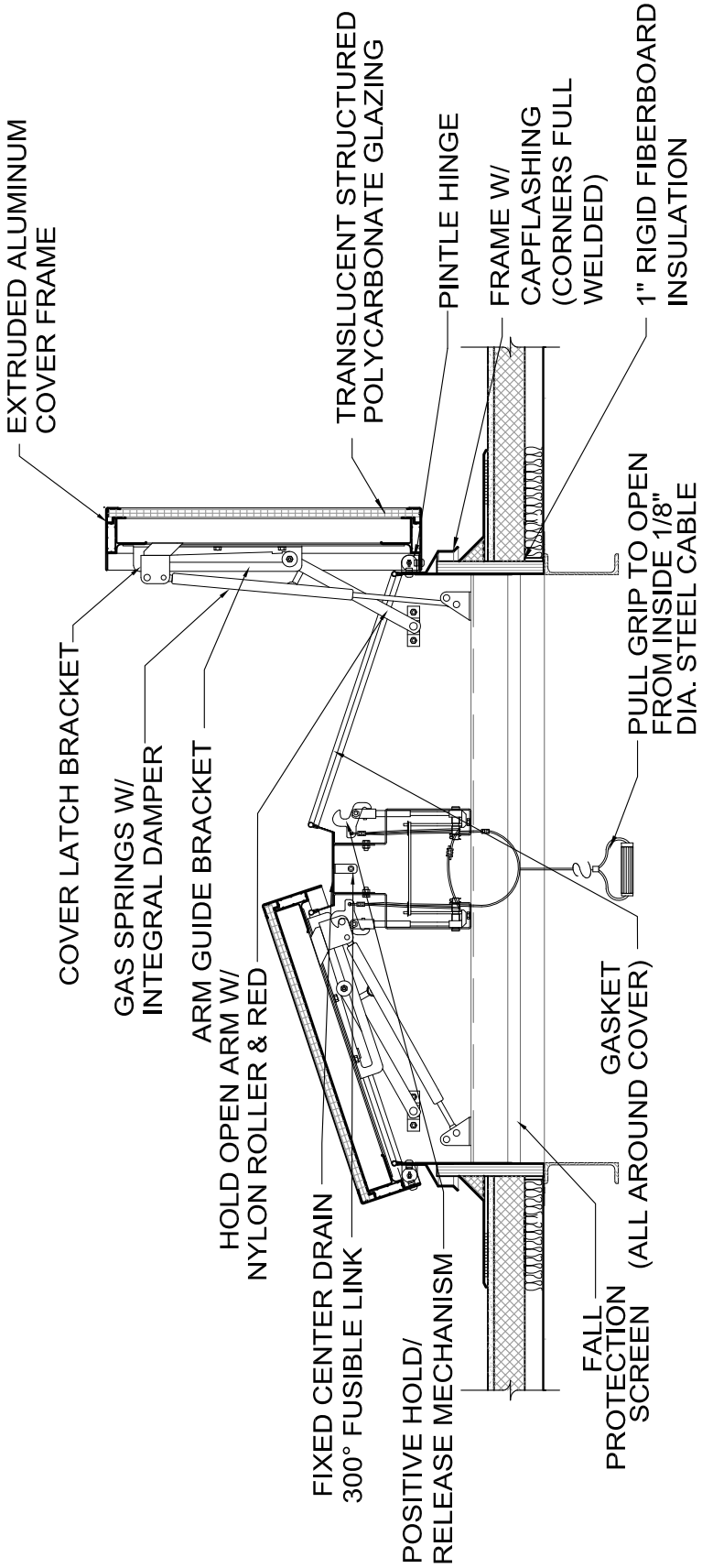

SMOKE HATCH

SCALE: NONE

FERMILAB ENGINEERING NOTE	SECTION	PROJECT	SERIAL/CATEGORY	PAGE
	FESS/Eng	N/A		FPME-7

SUBJECT

PASSANGER ELEVATOR
FIRE PROTECTION - DESIGN GUIDES

NAME: **R. GARCIA**

DATE: **12-26-2014**

REVISION DATE:

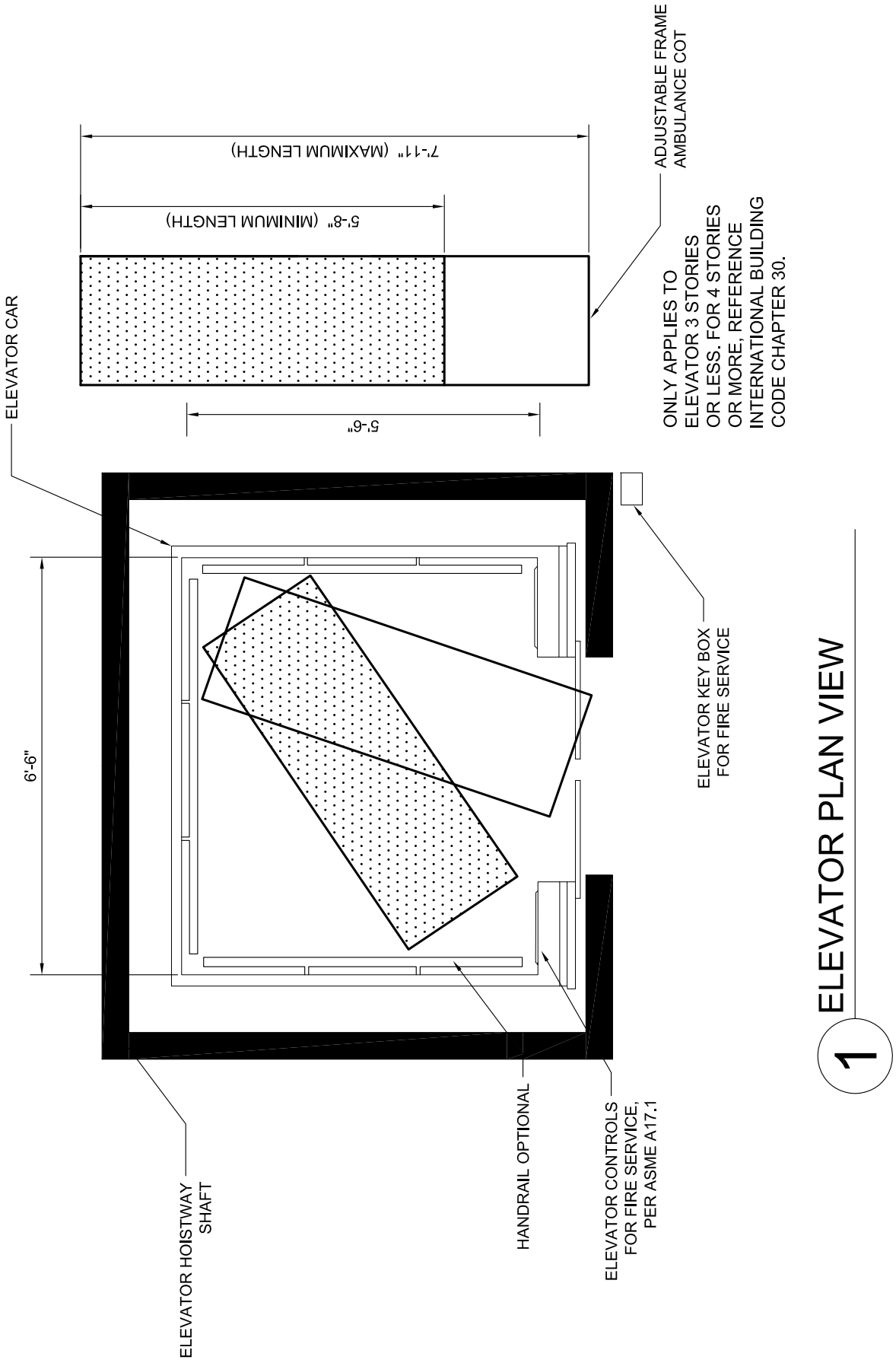

1 ELEVATOR PLAN VIEW

Basis of Design

This section applies to the design and installation of building and enclosure fire extinguishers.

1.0 Scope

A. Every new design shall incorporate the size and location of fire extinguishers. Placement of fire extinguishers shall be reviewed by the fire department prior to installation. When the project consists of beam enclosures, reference FESHM 6020.1. Fermilab on-site Fire Department maintains the fire extinguishers.

1.1 Applicable Codes/Standards

A. International Building Code (IBC)
B. International Fire Code (IFC)
C. National Fire Protection Association (NFPA) Codes/Standards, but not limited to:
   - NFPA 1, Fire Code
   - NFPA 10, Portable Fire Extinguishers
D. Fermilab's Environmental Safety & Health Manual (FESHM)
   - Chapter 6010, Fire Protection Program
   - Chapter 6020.1, Placement of Portable Fire Extinguishers in Primary Beam Enclosures

1.2 Related Sections

A. Facilities Engineering Services Section Design Guide – Architectural
B. Facilities Engineering Services Section Design Guide – Facility Safety
C. Facilities Engineering Services Section Design Guide – Fire Sprinkler

1.3 Design/Construction Documents

A. Provide industry standard documents.

2.0 Design Criteria and Evaluation

A. Fermilab's Fire Department will provide guidance on placement and type of fire extinguisher in new facilities.
B. Forged, non-slip discharge hose ethylene propylene diamine (EPDM) rubber, aluminum handle positions
C. Tank shall be stainless steel for H_2O and formulated type for specialized extinguishing agents, such as the clean agent fire extinguishers for data centers, as specified by the fire extinguisher manufacturer.
D. Tank shall be welded steel tube for dry chemical applications
E. If caps are provided with indicators, then stems should be the pop up type.

F. Forged aluminum fill caps

G. Suggested areas:

- <u>General Areas (Office, Corridors, Mechanical Spaces)</u>
  - Dry chemical, made of Monoammonium phosphate, Class ABC type fire extinguisher, 10 lb. capacity
  - Pressurized water type fire extinguisher, Class A type fire extinguisher, 2.5 gallon capacity
- <u>Computer Rooms</u>
  - Clean agent, Class C type fire extinguisher, 9.5 lb. (DuPont FE-36)
- <u>Kitchen Areas</u>
  - Wet agent, Class K type fire extinguisher, 1.6 gallon capacity
- <u>Flammable Liquids and Gas Areas</u>
  - Dry chemical, Class B type fire extinguisher 10 lb. capacity

2.1 Products, Materials, and Equipment

A. Fire extinguishers must be U.L. Listed and/or FM Approved.

B. Ansul

C. Amerex®

3.0 Installation, Fabrication, and Construction

A. For semi-recessed or surface mounted cabinets, reference architectural design guides.

B. Install according to manufacturer's recommendations/instructions and standard "trade" industry practices.

Version Number	Date	Author	Change Summary
0	11/26/2012	J. Niehoff	Initial Release
1	01/30/2015	J. Niehoff	Revised section 1.3 added reference to Architectural Design Guide
2	1/30/2016	J. Niehoff	Added Facility Safety in Reference material 1.3

Basis of Design

This section applies to the design and installation of fire detection, control, releasing, and alarm systems.

1.0 Scope (Background)

A. Fermilab uses a custom Facility Information Reporting Utility System (FIRUS) that is on a secure network and monitors the status of fire, security, and utility sensors throughout the laboratory. FIRUS signals Fermilab's Communication Center (Comm Center) which is staffed with operators 24/7. The Comm Center dispatches the appropriate emergency response personal. The fire alarm systems are operated and maintained by Facilities Engineering Services Section (FESS), reference Fire Alarm / FIRUS Monitoring Sketch.

B. The fire alarm system, in many cases, is directly connected to other equipment, e.g., HVAC shut-down, dampers, smoke abatement, elevator recall & power shut-down, security access doors, door holders, and Oxygen Deficiency Hazard Controls. The fire alarm contacts may or may not be configured in a "fail safe" operation. In addition, the contacts may be normally open (NO) or normally closed (NC) depending on the equipment operation. Every effort shall be made to separate low voltage (less than 50 volts) from the high voltage (greater than 50 volts) by using an interface relay. The fire alarm system contact will control the interface relay, reference the Fire Alarm Control Sketches 1, 2, and 3.

1.1 Applicable Codes/Standards

A. International Building Code (IBC)

B. International Fire Code (IFC)

C. National Fire Protection Association (NFPA) Codes/Standards, but not limited to:
- NFPA 1, Fire Code
- NFPA 13, Automatic Sprinkler Systems
- NFPA 15, Fixed Water Spray Systems
- NFPA 25, Inspection and Testing of Fire Suppression Systems
- NFPA 70, National Electrical Code
- NFPA 75, Standard for the Fire Protection of Information Technology
- NFPA 72, National Fire Alarm and Signaling Code
- NFPA 101, Life Safety Code
- NFPA 318, Standard for the Protection of Semiconductor Fabrication Facilitates

D. Fermilab's Environmental Safety &Health Manual (FESHM)
- Chapter 6010, Fire Protection Program
- Chapter 6013, Facility Incident Reporting Utility System (FIRUS)

1.2 Related Sections

A. Facilities Engineering Services Design Guide – Facility Safety

B. Facilities Engineering Services Section Design Guide – Automatic Sprinkler
C. Facilities Engineering Services Section Design Guide - Special Suppression

1.3 Design/Construction Submittals

A. Working Plans, battery, and voltage drop calculations should be in accordance with NFPA 72.

2.0 Design Criteria and Evaluation

A. All new fire alarm systems should be intelligent addressable type, unless directed otherwise by the FESS – Engineering Department.
B. All new fire alarm systems should be reviewed and considered for emergency voice alarm system capable of integrating with Fermilab Site-wide Emergency Warning System. This determination will be made by the project team, ESH&Q, and FESS.
C. All fire alarm control panels (FACP) should be provided with a T-45 key and lock assembly.
D. FACPs shall be provided with by-pass switches or function keys for custom control of notification devices and sub-functions (may exclude FIRUS) for testing and maintenance purposes (including Fire Department Test Mode) as determined by the Fire Systems Maintenance Group.
E. When designing an addressable system, in duct smoke detectors should provide a supervisory signal at the fire alarm control panel and signal output should be supervisory to FIRUS.
F. All fire alarm systems shall be connected to Fermilab's FIRUS systems, capable of indicating FIRE ALARM, SUPERVISORY, and TROUBLE signals.
G. All FACPs shall be provided with a walk-test feature.
H. All FACPs shall be provided with smoke verification feature.
I. The fire alarm control panel or supplement power panels shall be provided with a designated 120V circuit with switch and handle guard, see sketch no. 1.
J. All programming and addressable device descriptions shall be reviewed by the Fire Department and Fire Systems Maintenance Group prior to download of program into FACP. In addition, a hard copy of software programming, electronic programming files, and electronic as-built documents shall be provided to FESS.
K. FACP should be capable of self-restoring in power outage troubles and selectable for latching all other trouble or supervisory signals.
L. Upon completion, the fire alarm manufacturer should provide on-site factory training for the fire system maintenance group.

2.1 Products, Materials, and Equipment

A. Acceptable equipment manufacturers for addressable fire alarm control panels are Siemens, unless approved otherwise by FESS-Engineering Department.

B. Acceptable equipment manufacturers for conventional (non-addressable) fire alarm control panels are Siemens or Honeywell Silent Knight, unless approved otherwise by FESS-Engineering Department.

C. Line type heat detection, manufactured by Protectowire®, should be installed in beam enclosures.

D. Air sampling smoke detection, manufactured by Xtralis™ (VESDA) or Kidde - Fenwal.

3.0 Installation, Fabrication, and Construction

A. Addressable circuits should be a minimum of 18 AWG solid twisted jacketed cable and must meet manufacturer's requirements. Conventional (Hardwire) initiating circuits should be a minimum of 18 AWG solid cables. Notification appliance circuits should be a minimum of 14 AWG solid cables. Combination horn and strobe devices can be two-wire; however, combination speaker and strobe devices shall be 4-wire with audible circuit (e.g., red) a different color then the visual circuit (e.g., blue).

B. All cabling should be installed in conduit, IMC minimum with the exception of office areas can be EMT. The minimum conduit size should be 3/4".

C. All manual pull stations should be dual action type and able to be reset with a T-45 key or an allen wrench.

D. Air sampling smoke detection test station and special configurations:
   - A test connection with cap and test hole shall be located approximately 6-feet above finished floor.
   - For hazardous spaces such as Cleanrooms and Radiation Spaces, the air sampling smoke detector should be located outside the hazard and air return should be piped back into the hazard space.
   - In hazards spaces as described above, provide test valve in addition to the test port located approximately 6-feet above finished floor.

E. All fire alarm system shall be connected to Fermilab's FIRUS system, capable of indicating FIRE, SUPERVISORY, and TROUBLE signals via independent Form C relays.

F. All fire alarm cabling should be located in raceways. Reference the electrical design guides for type of conduct/raceways.

G. All junction boxes with blank covers must be identified as "Fire Alarm", "FA", or painted red.

H. All sources of AC power greater than 24 volts supplying power to the FACP or other fire alarm control units, power supply must have cabinets labeled with the identification of the power distribution panel and circuit breaker.

I. All sources of AC power greater than 24 volts supplying power to the FACP or other fire alarm control units, power supply must have a barrier installed to protect a worker from an electrical shock hazard.

J. At no time is it allowable to install control wiring with voltages greater than 24 volts (except for the dedicated circuit for the panel or power supply) inside of any control panel.

K. Any control circuit using voltages greater than 50 volts must use a junction box (other than the FACP or fire alarm control unit) and interface relay (reference Background Section). The relay contacts must have a barrier installed to protect a worker from an electrical shock hazard. The junction box must also be clearly identifying the voltage and source information of the power distribution panel and circuit breaker.

L. At a minimum, all work must comply with NFPA 70 and 72.

M. Install according to manufacturer's recommendations/instructions and standard "trade" industry practices.

N. If lighting controls are provided, the fire alarm should be integrated to turn on lights during an alarm activation.

Typical Sketch Details

FPFA-1	FIRE ALARM CONTROL PANEL POWER
FPFA-2	FIRE ALARM FIRUS MONITORING WIRING DIAGRAM
FPFA-3	FIRE ALARM CONTROLS INTERFACE

Version Number	Date	Author	Change Summary
0	11/26/2012	J. Niehoff	Initial Release
1	03/01/2015	J. Niehoff	Added Conventional Fire Alarm & revised section 3.1
2	01/30/2016	J. Niehoff	Minor changes the formatting

FERMILAB ENGINEERING NOTE	SECTION	PROJECT	SERIAL/CATEGORY	PAGE
	FESS/Eng	N/A		FPFA-1

SUBJECT

FIRE SUPERVISING STATION
FIRE ALARM CONTROL PANEL VOLTAGE POWER

NAME: **J. NIEHOFF**

DATE: **11-26-2012**

REVISION DATE:

FACP SHALL BE LABELED WITH SOURCE POWER PANEL & CIRCUIT BREAKER

SAMPLE OF DISCONNECT SWITCH

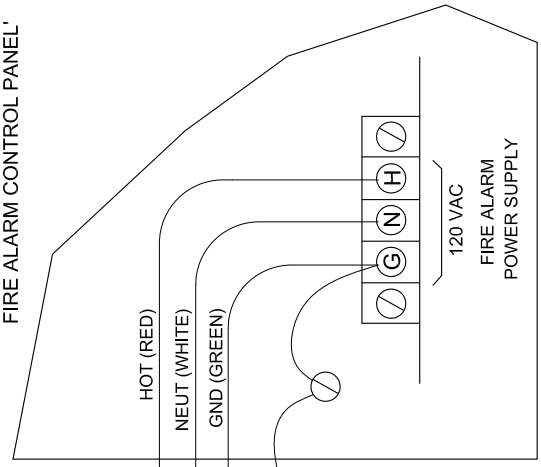

FERMILAB ENGINEERING NOTE	SECTION	PROJECT	SERIAL/CATEGORY	PAGE
	FESS/Eng	N/A		FPFA-2

SUBJECT

FIRE SUPERVISING STATION
FIRE ALARM / FIRUS MONITORING DIAGRAM

NAME: **J. NIEHOFF**

DATE: **11-26-2012**

REVISION DATE:

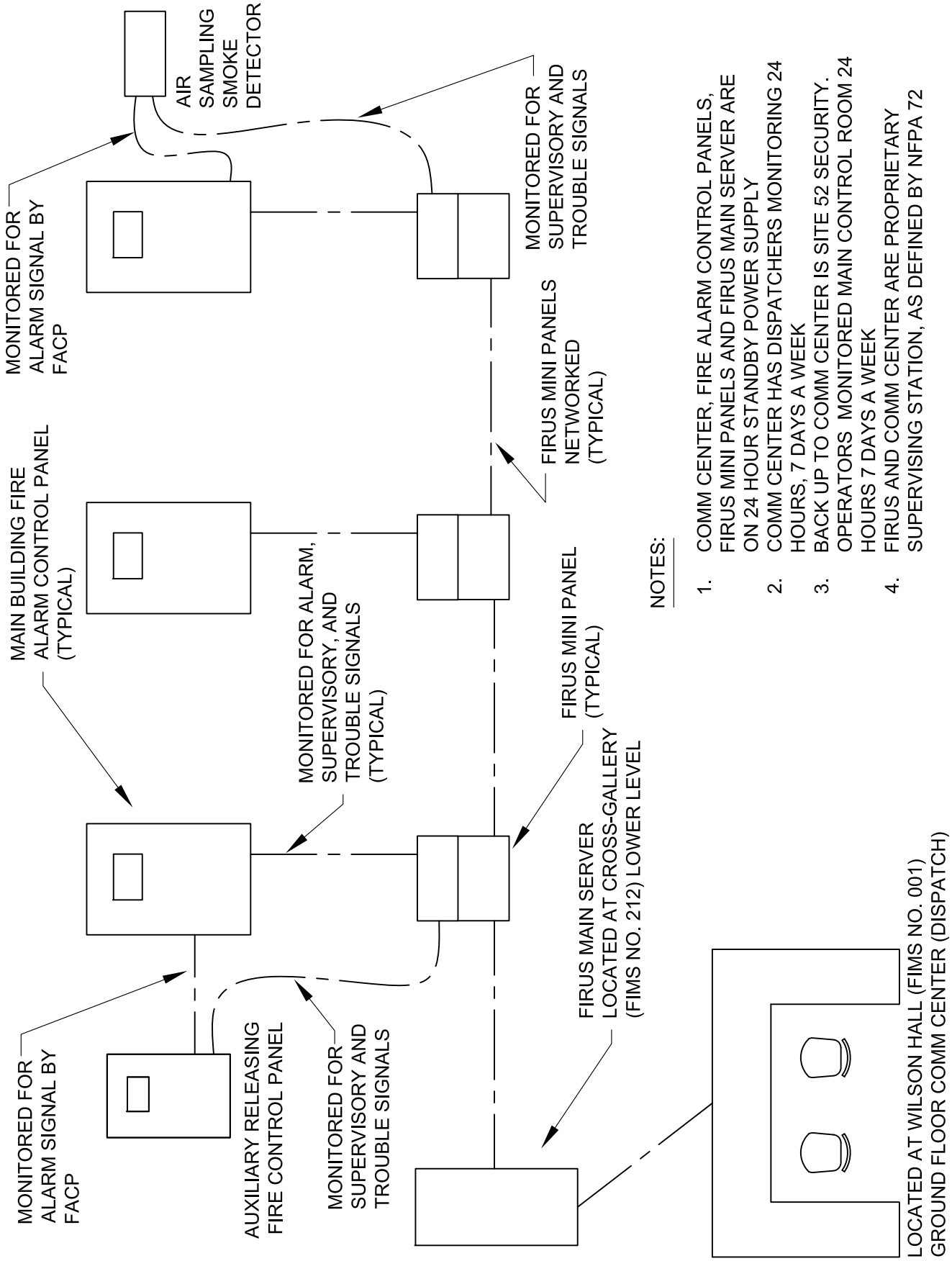

NOTES:

1. COMM CENTER, FIRE ALARM CONTROL PANELS, FIRUS MINI PANELS AND FIRUS MAIN SERVER ARE ON 24 HOUR STANDBY POWER SUPPLY
2. COMM CENTER HAS DISPATCHERS MONITORING 24 HOURS, 7 DAYS A WEEK
3. BACK UP TO COMM CENTER IS SITE 52 SECURITY. OPERATORS MONITORED MAIN CONTROL ROOM 24 HOURS 7 DAYS A WEEK
4. FIRUS AND COMM CENTER ARE PROPRIETARY SUPERVISING STATION, AS DEFINED BY NFPA 72

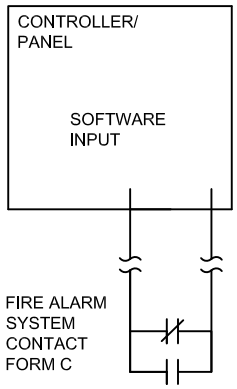

DETAIL No. 1

SCALE: NONE

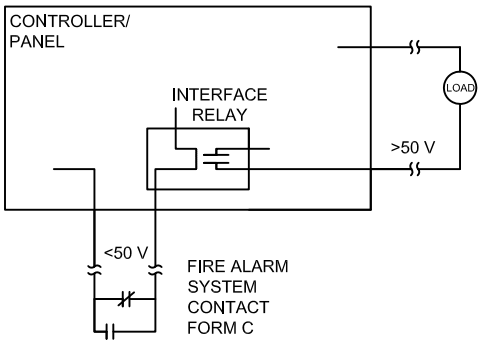

DETAIL No. 2

SCALE: NONE

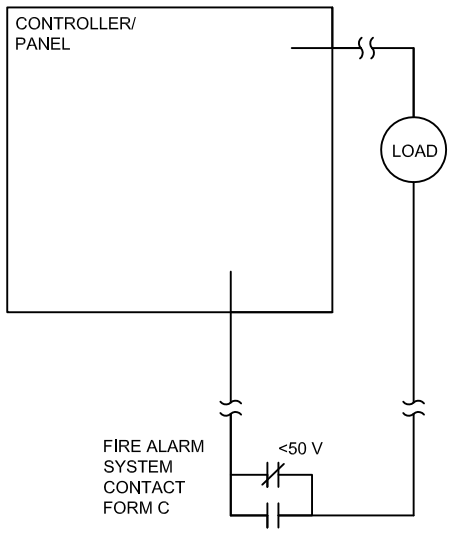

DETAIL No. 3

SCALE: NONE

Basis of Design

This section applies to the design and installation of pipe, pipe fittings, valves, piping accessories, and equipment for fire protection suppression systems.

1.0 Scope (Background)

A. Main site fire protection supply water is from Fermilab's Industrial Cooling Water (ICW). The ICW system is non-potable and comes from an open pond reservoir and therefore, is considered a "raw water source" as designated by NFPA 13. The Village area fire protection supply water is from Village of Warrenville and is a potable water source.

1.1 Applicable Codes/Standards

A. International Building Code (IBC)
B. International Fire Code (IFC)
C. National Fire Protection Association (NFPA) Codes/Standards, but not limited to:
- NFPA 1, Fire Code
- NFPA 13, Automatic Sprinkler Systems
- NFPA 15, Fixed Water Spray Systems
- NFPA 25, Inspection and Testing of Fire Suppression Systems
- NFPA 30, Flammable and Combustible Liquids Code
- NFPA 72, National Fire Alarm and Signaling Code
- NFPA 75, Standard for the Fire Protection of Information Technology
- NFPA 101, Life Safety Code
- NFPA 318, Standard for the Protection of Semiconductor Fabrication Facilitates

D. Fermilab's ES&H Manual (FESHM)
- Chapter 6010, Fire Protection Program
- Chapter 6013, Facilities Incident Reporting Utility System (FIRUS)
- Chapter 6020.3, Storage and Use of Flammable Gases

1.2 Related Sections

A. Facilities Engineering Services Section Design Guide – Facility Safety
B. Facilities Engineering Services Section Design Guide – Fire Alarm

1.3 Design/Construction Submittals

A. Working Plans and hydraulic calculations should be in accordance with NFPA 13.

2.0 Design Criteria and Evaluation

A. The minimum design density shall be based on Ordinary Hazard Group I.

B. Hydraulically designed sprinkler systems shall be designed for not less than 10-psi below the ICW water supply curve, see attached appendix. The Village area will be at the discretion of the design team.

C. The minimum sprinkler spacing shall be 130 square feet and 100 square feet for experimental, assembly, collision hall and general industrial high bay areas.

D. Preference in utilizing standard spray, quick response sprinklers should be utilized.

E. In general, high bay areas, such as assembly, experimental halls, etc., the minimum sprinkler K factor of 8.0 should be utilized.

F. Return bends (arm-overs) shall be provided on all pendent sprinklers.

G. Welding of sprinkler piping is permitted on site by a certified welder.

H. All wet type automatic sprinkler system pipes shall be schedule 40 steel. Dry type automatic sprinkler system pipes shall be either schedule 40 steel or galvanized schedule 40 pipe, determination by the design team.

I. 1/2" or 3/4" Pipe should be galvanized steel, schedule 40 when retrofitting existing upright sprinkler outlets supplying new pendent type sprinklers.

J. Water-flow alarm detectors (switches) should be provided with double pole, double throw contacts, rated at 120 VAC at 3 amps.

K. Preaction sprinkler systems should be configured as double interlocked. In addition, the air supervisory switch should be cross-zoned with the releasing detection.

L. Collision Hall sprinkler system should be dual action preaction type.

M. Clean rooms should be designed with quick response sprinklers with an operational design of 0.2 gpm over 3,000 sq. ft., NFPA 318.

N. Water-flow supply test information can be obtained from the FESS-Engineering Department.

O. All control valves should be provided with electronic valve supervisory (tamper) switches.

P. Flushing valve arrangement should be provided through the fire department connection, see sketch no. FPS-1.

Q. As-built documents should be provided to FESS.

2.1 Products, Materials, and Equipment

A. All devices and equipment shall be U.L. Listed and/or FM Approved.

B. Spray sprinklers, valves, check valves, including deluge and preaction valve assemblies, should be manufactured by Viking® or Tyco.

C. Backflow preventers as required by the design team should be manufactured by Watts - FEBCO®, series 880V.

D. Fire Department connection should be a 4-inch "Locking Storz" quick connect with a 22¼-degree straight-galvanized or anodized aluminum elbow on the exterior inlet pipe to the Storz connection. Also, the gasket shall be removed from the Storz cap.

E. Fire Department Hose, should be Giacomini or Potter Roemer, angled pressure (adjustable flow) reducing valve, female NPT to male hose thread, 2-1/2-inch.

F. Combination auxiliary and inspector's test connections should be provided on sprinkler risers, manufactured by AGF Test and Drain Assembly.

3.0 Installation, Fabrication, and Construction

A. A control valve should be provided after the preaction valve assembly, to facilitate testing without introducing water throughout the piping network.

B. If feasible, air compressors should be mounted above the point of connection with flexible tubing, such as rubber hose.

C. Consider installing ¾-inch relief valves on small, service building, type sprinkler systems to alleviate the potential of solar hearing on static pressures in wet-type sprinkler systems.

3.1 Typical Sketch Details

FPS-1 SPRINKLER RISER WITH FLUSHING DETAIL
FPS-2 SPRINKLER RETURN BENDS

Version Number	Date	Author	Change Summary
0	11/26/2012	J. Niehoff	Initial Release
1	03/01/2015	J. Niehoff	Updated FESHM Chapters & revise section 1.3
2	01/30/2016	J. Niehoff	Added Appendix Material Water Supply

The purpose of this analysis is to provide the design water flow supply curves for designing water based fire suppressions systems. This data was derived from the Industrial Cooling Water Vulnerability Analysis originally conducted in 2006 by Crawford, Murphy, & Tilly, Inc. (CMT) and later updated in 2014. This analysis was conducted using WaterCAD hydraulic model software and actual water flow test performed to calibrate the model. In similar regions of the lab, the data was analyzed to find the minimum flow rate in the regions. This flow rate was used in creation of a pressure and flow graphs, which used the average minimum static pressure and the average minimum residual pressure between generated models of 2006 and 2014 by CMT. Using these values created a conservative estimation. This approximation created individual graphs for nine (9) different regions in the laboratory. The following water flow design table has been derived.

Site Location	Static Pressure [PSI]	Flow at 20 PSI [GPM]	Flow at 0 PSI [GPM]
Lab A-G Campus Area	75	2015	2382
Muon Experiments Area	76	1488	1755
Site 38 and Site 39 Area	66	1215	1476
IB and CDF Area	74	1425	1689
D0 Area	68	1425	1719
Central Campus Area	75	1215	1436
West Main Ring	74	961	1139
Minos and Science Center	73	961	1142
Main Injector Area	69	1215	1462

This analysis of the design water flows is a conservative approach and the actual water flows may be higher, especially from the peak (summer) cooling demands. Though this analysis does not necessarily omit the requirement for a water flow test in accordance with NFPA 13, caution should be used when assessing the water flow test information due to the variable speed pumps at Casey's pump house to compensate for an open port on a hydrant. In addition, the cooling loads from the ICW system vary during the season, i.e., summer to winter months.

Source Documentation:

CMT August 2014 Report
Fermilab – ICW Modeling Scenarios
FESS Engineering Project Number 3-5-174

CMT November 2006 Report
ICW Vulnerability Analysis Hydraulic Model Update
FESS Engineering Project Number 3-5-143

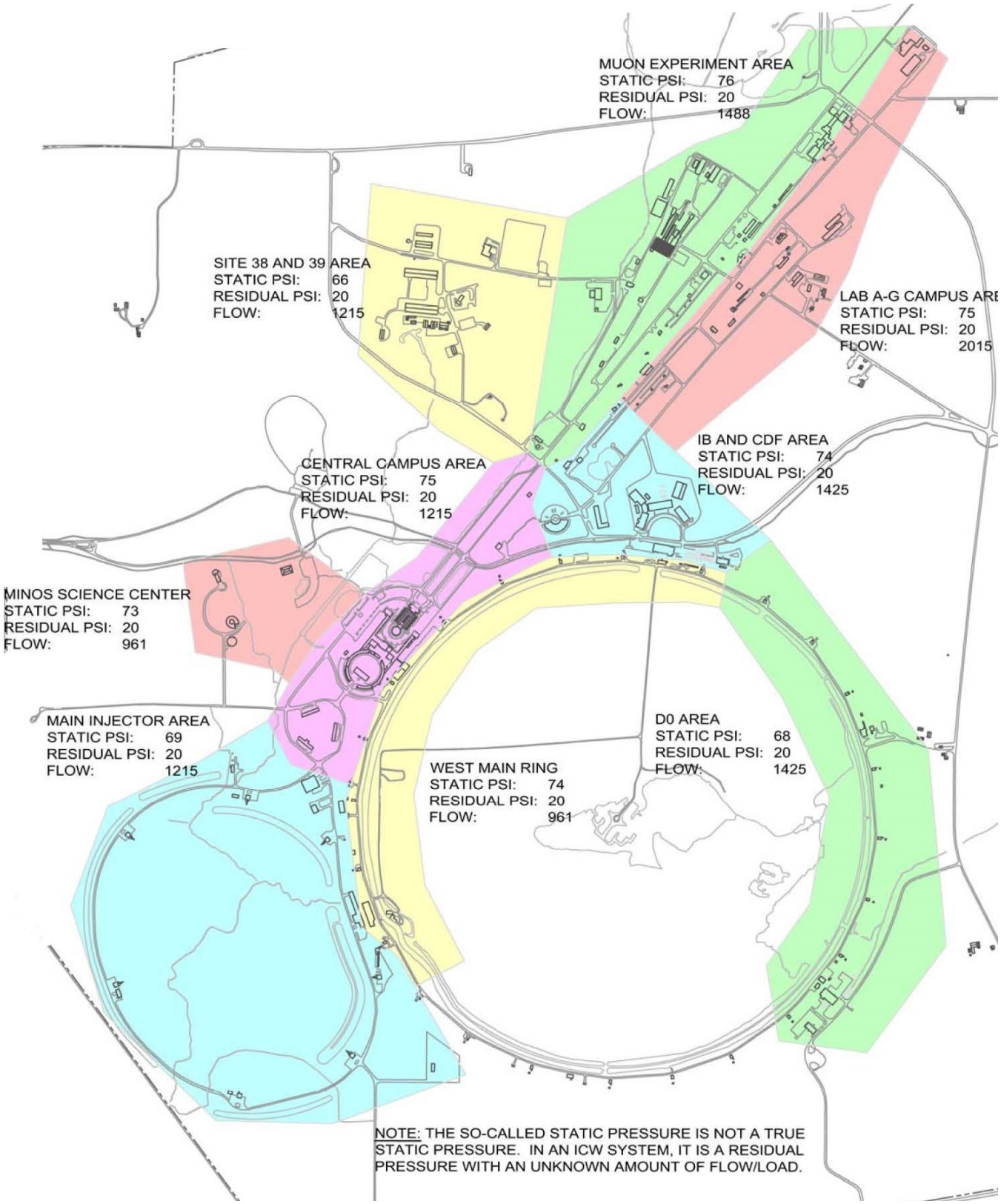
MUON EXPERIMENT AREA
STATIC PSI: 76
RESIDUAL PSI: 20
FLOW: 1488
SITE 38 AND 39 AREA
STATIC PSI: 66
RESIDUAL PSI: 20
FLOW: 1215
LAB A-G CAMPUS ARE
STATIC PSI: 75
RESIDUAL PSI: 20
FLOW: 2015
IB AND CDF AREA
STATIC PSI: 74
RESIDUAL PSI: 20
FLOW: 1425
CENTRAL CAMPUS AREA
STATIC PSI: 75
RESIDUAL PSI: 20
FLOW: 1215
MINOS SCIENCE CENTER
STATIC PSI: 73
RESIDUAL PSI: 20
FLOW: 961
MAIN INJECTOR AREA
STATIC PSI: 69
RESIDUAL PSI: 20
FLOW: 1215
D0 AREA
STATIC PSI: 68
RESIDUAL PSI: 20
FLOW: 1425
WEST MAIN RING
STATIC PSI: 74
RESIDUAL PSI: 20
FLOW: 961
NOTE: THE SO-CALLED STATIC PRESSURE IS NOT A TRUE STATIC PRESSURE. IN AN ICW SYSTEM, IT IS A RESIDUAL PRESSURE WITH AN UNKNOWN AMOUNT OF FLOW/LOAD.

FERMILAB ENGINEERING NOTE	SECTION	PROJECT	SERIAL/CATEGORY	PAGE
	FE/E	NA		FPS-1

SUBJECT

DESIGN GUIDES - FIRE SUPPRESSION
SPRINKLER RISER WITH FLUSHING CONNECTION

NAME: **J. NIEHOFF**

DATE: **11-26-2012**

REVISION DATE:

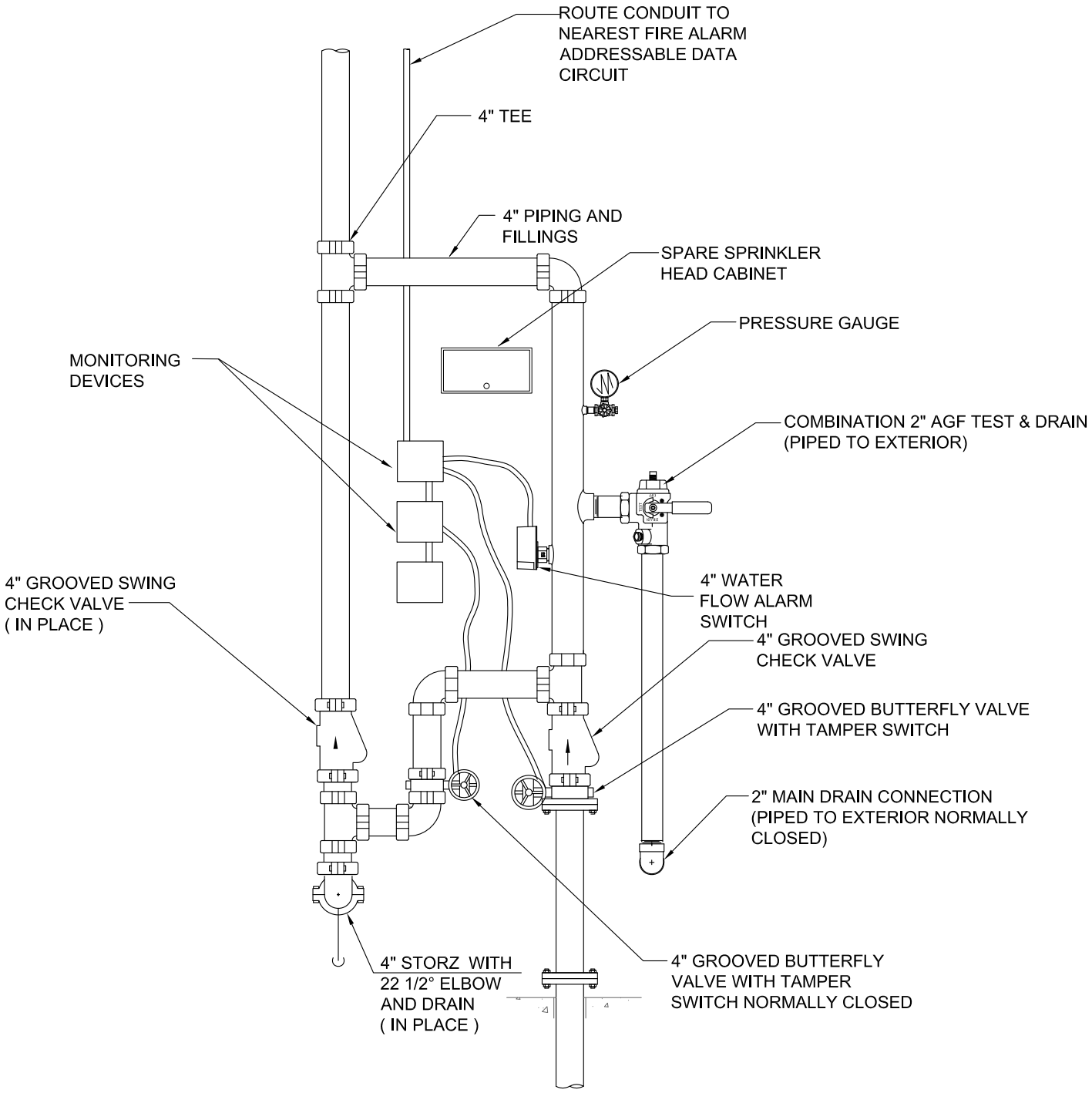

FERMILAB ENGINEERING NOTE	SECTION	PROJECT	SERIAL/CATEGORY	PAGE
	FE/E	NA		FPS-2

SUBJECT	NAME	
DESIGN GUIDES - FIRE SUPPRESSION PENDENT SPRINKLER RETURN BENDS	**J. NIEHOFF**	
	DATE **11-26-2012**	REVISION DATE **1/30/2016**

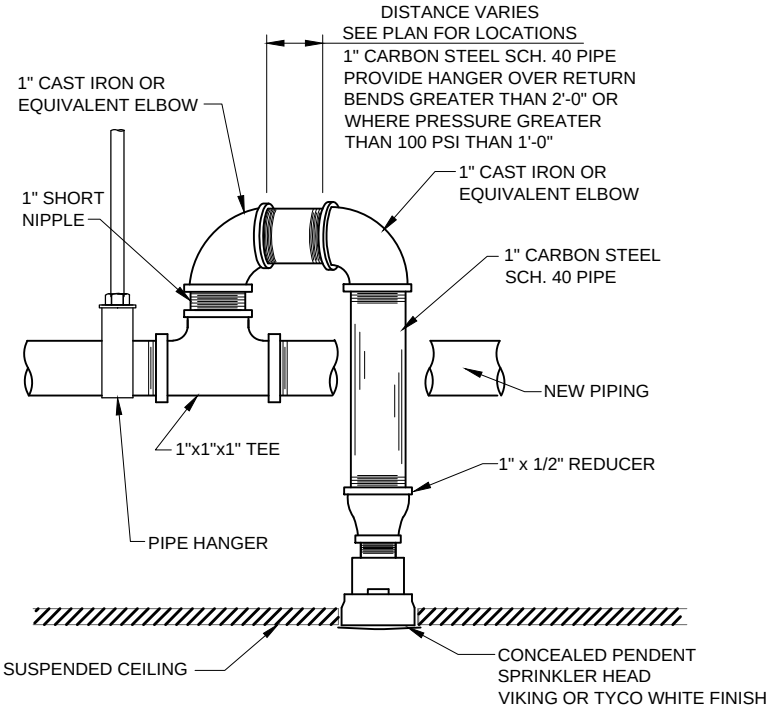

PENDENT DETAIL

SCALE: NONE

2

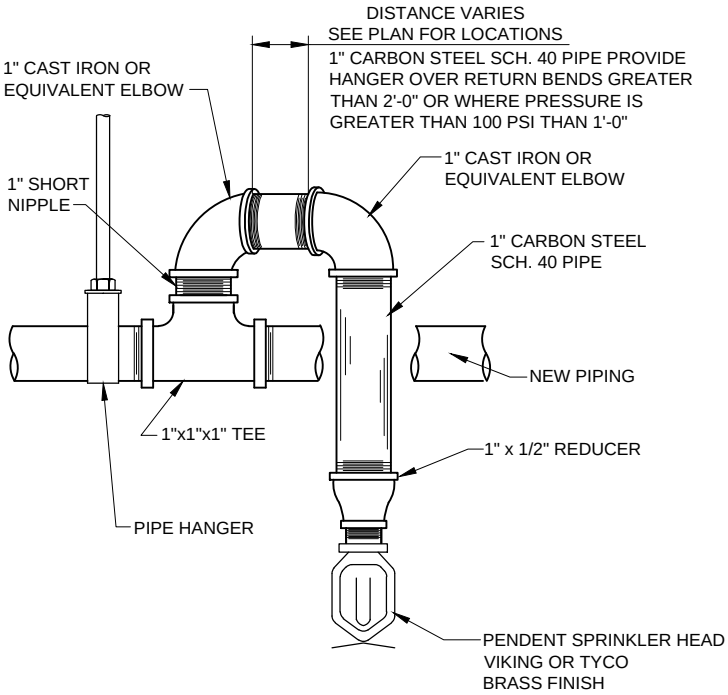

PENDENT DETAIL

SCALE: NONE

1

Basis of Design

This section applies to the design and installation fixed fire extinguishing systems.

1.0 Scope (Background)

A. Fermilab uses special fixed fire extinguishing systems to protect experiments, programmatic functions, etc. This includes water mist fire suppression systems, gaseous fire extinguishing systems, and deluge water spray systems. These on-site fire extinguishing systems are operated and maintained by Facilities Engineering Services Section (FESS).

1.1 Applicable Codes/Standards

A. International Building Code (IBC)
B. International Fire Code (IFC)
C. National Fire Protection Association (NFPA) Codes/Standards, but not limited to:
- NFPA 1, Fire Code
- NFPA 17A, Wet Chemical Extinguishing Systems
- NFPA 15, Fixed Water Spray Systems
- NFPA 25, Inspection and Testing of Fire Suppression Systems
- NFPA 72, National Fire Alarm and Signaling Code
- NFPA 75, Standard for the Protection of Information Technology
- NFPA 101, Life Safety Code
- NFPA 750, Water Mist Fire Protection Systems
- NFPA 2001, Clean Agent Fire Extinguishing Systems
- NFPA 2010, Standard for Fixed Aerosol Fire Extinguishing Systems

1.2 Related Sections

A. Facilities Engineering Services Section Design Guide – Fire Alarm

1.3 Design/Construction Submittals

A. Working Plans, calculations, battery, and voltage drop calculations should be in accordance with NFPA applicable standards.

2.0 Design Criteria and Evaluation

A. CO_2 fire suppression system should be avoided.
B. If air sampling is the method of detection, then the air sampling display should be programmed so that 100% at 40 seconds sends a signal via FIRUS indicating that FIRST LEVEL OF AIR SAMPLING IN ALARM. Release of agent should be at 100% for 60 seconds.

C. If cross-zone detection is provided, then additional signal outputs from the releasing control panel to FIRUS should indicate FIRST DETECTOR ZONE IN ALARM and SECOND DETECTOR ZONE IN ALARM.
D. The manifold pressure switch should connect directly into FIRUS and indicate AGENT RELEASED.
E. Provide a time delay after second alarm prior to releasing agent to facilitate HVAC shut-down.
F. Equipment shut-down, such as dampers and electronics should be from a manifold pressure switch.
G. Manifold pressure switches should be provided with a minimum of double pole and double throw contacts.
H. HVAC shut-down should occur at second alarm of cross-zone.

2.1 Products, Materials, and Equipment

A. All devices and equipment must be listed or approved by a recognized testing laboratory
B. UTC Fire & Security - Water Mist Marioff
C. UTC Fire & Security – Kidde - Fenwal

3.0 Installation, Fabrication, and Construction

A. Install according to manufacturer's recommendations/instructions and standard "trade" industry practices.

Version Number	Date	Author	Change Summary
0	11/26/2012	J. Niehoff	Initial Release
1	03/01/2015	J. Niehoff	Minor corrections & revised section 1.3
2	01/30/2015	J. Niehoff	Formatting corrections

Basis of Design

This section applies to the conventional facilities/civil electrical requirements.

1.0 Scope

A. The power infrastructure system serving the Fermilab campus is owned and operated by Fermilab. Fermilab receives power from ComED at two locations on campus that serve the Master Substation and Kautz Road Substation. These systems are operated and maintained by Facilities Engineering Services Section.

1.1 Applicable Codes/Standards

A. International Building Code (IBC)
B. Institute of Electrical and Electronics Engineers
C. National Fire Protection Association (NFPA) Codes/Standards, but not limited to:
   - NFPA 70, National Electrical Code

D. Fermilab's ES&H Manual (FESHM)
   - Chapter 9100, Fermilab Electrical Safety Program
   - Chapter 9120, AC Electrical Power Distribution Safety

2.0 Electrical Design Guides

A. The electrical design guides include the following sections.

7.0 General
7.1 Cables and Wires
7.2 Grounding
7.3 Lighting
7.4 Low Voltage
7.5 Medium Voltage
7.6 Motors
7.7 Motor Control Centers
7.8 Nominal Voltage and Phase Rotation
7.9 Raceways & Duct Banks
7.10 Receptacles
7.11 Safety Switches
7.12 Switch Boards and Panel Boards
7.13 Transformers

Appendix Electrical System Conventions (FEHSM 9100 series)

Basis of Design

This section applies to the design and installation of cables and wires.

1.0 Scope (Background)

A. This section applies to primary power (medium) distribution cabling and low voltage cabling.

1.1 Applicable Codes/Standards

A. International Building Code (IBC)
B. Institute of Electrical and Electronics Engineers
C. National Fire Protection Association (NFPA) Codes/Standards, but not limited to:
   a. NFPA 70, National Electrical Code

1.2 Related Sections

A. Facilities Engineering Services Section Design Guide – Electrical General

1.3 Design/Construction Documents

A. Standard industry requirements.
B. Standard industry quality assurance, i.e., electrical acceptance tests. Coordinate with the FESS Engineering Electrical Engineer.

2.0 Design Criteria and Evaluation

A. General:
   - In General, all cables and wires shall be run in conduit, cable tray, or concrete encased ducts. Exposed, bare conductors are not permitted (except aerial transmission lines specifically designed for that purpose). Medium voltage cables (15KV or 5KV) shall always be conduit encased. Direct burial of MV cables is not permitted. MV buried raceways shall generally be concrete encased, except where such conduits are installed by directional bore method or stubbing-up below concrete pads (such as at transformers or switch pads. Low voltage cables (≥50V<600V) shall be encased in approved raceway for all buried applications.
   - Selection Of Cable Sizes for individual loads (motors, transformers, etc.) are given in the design criteria of those loads. Cable sizes shown represent the minimal size to be used. Longer runs will require larger sizes based on voltage drop requirements as determined by NEC 210-19, 215-2, and 310-15.

- Cable Sizes For Combined Loads (group feeders or branch circuits) shall be based on 125% of the largest continuous load in the circuit plus the sum of all other loads in the circuit.
- Voltage Drop in any circuit should not exceed 4% of the nominal circuit voltage.

B. 15 KV Medium Voltage Cable:

- Insulation Voltage Class: For 13.8KV (grounded neutral) systems, it shall be 15KV.
- Insulation Type: Heat resistant and ozone resistant thermosetting - ethylene propylene-rubber (EPR), minimum 175 mil thickness for 750 MCM and 220 mil thickness for small cables. The smaller thickness allows 750 MCM cable to be installed in 5" diameter conduit.
- Conductor Shield: A layer of extruded *conducting* or semiconducting thermosetting compound, minimum 18 mil thickness.
- Insulation Shield: Semi-conducting extruded compound.
- Conductor Material: Stranded aluminum.
- Temperature Rating: Minimum continuous 90°C; Emergency 130°C; Short Circuit 250°C.
- Number Of Conductors: Three single conductor cables triplexed at the factory with factory installed pulling eye.
- Concentric Neutral With Protective Jacket: Annealed, - uncoated copper strands approximately equal in conductance to one-third of the phase conductor for 3 phase applications and a full neutral for 1 phase applications. Concentric neutral covered with a non-conducting polyethylene jacket over its entire length.

C. 5 KV Medium Voltage Cable

- Insulation Voltage Class: For 4.16KV (grounded neutral) systems, it shall be 5KV shielded.
- Insulation Type: Heat resistant and ozone resistant ethylene-propylene-rubber (EPR) type elastomer, minimum 90 mil thickness.
- Conductor Shield: A layer of extruded semiconducting thermosetting compound, minimum 20 mil thickness.
- Insulation Shield: Extruded semi-conducting compound, minimum 24 mils.
- Metallic Shield: Non-magnetic metallic conducting cover, consisting of a copper tape, applied helically with a 12 1/2% minimum overlap.
- Jacket: Polyvinyl chloride compound, minimum 80 mils.
- Conductor Material: Stranded copper.
- Temperature Rating: minimum continuous 90°C; Emergency 130°C; Short Circuit 250°C.
- Ampacities: Per NEC

D. Low Voltage Power Cable:

- System Voltages: 0 to 480V AC.
- Insulation Voltage Class: 600 Volts.
- Insulation Type:
  - THHW, USE or Other as appropriate (90°C)
  - Above 50°C Ambient (SA) silicone rubber (125°C) with glass braid or teflon insulated cable (FEP-200°C).
- Conductor Material: Stranded copper. Solid wiring is not permitted.
- Number Of Conductors: Single conductor cable only.
- Color: Wires and cables shall be factory color coded with a separate color for each phase and neutral. The following color code shall be used for all wiring:

	208/120V	480/277V & 4.16KV	13.8KV
Ground	Green	Green	Green
Neutral	White	Gray	White
Phase A	Black	Brown	Black
Phase B	Red	Orange	Red
Phase C	Blue	Yellow	Blue

- Ampacities: Per NEC
- Allowable Short-Circuit Currents: To prevent permanent damage to the cable insulation in the event of a short circuit, the minimum size of conductors for feeders from 1.5 MVA 480 Volt, unit substations with 35,000 Amp (Sym) Feeder Breaker Interrupting Rating, shall be #3/0 AWG.

E. Control Cable:

- Insulation Voltage Class: 600 Volts.
- Insulation Type:
  - 50°C Ambient or less, SO (60°C) or SJO rubber (as applicable).
  - Above 50°C Ambient, FEP Teflon insulated (200°C)
- Conductor Material: Stranded Copper.
- Overall Jacket: Neoprene.
- Conductor Size: Minimum #14 AWG
- Color Coding: Solid Colors with Spiral Stripes as Required ICEA S-19-81 Table 5-2. For larger conductor sizes color coding of the insulation or jacket can be accomplished using three wraps of colored tape to match required phase designation .

2.1 Products, Materials, and Equipment

A. Cable and wire procurement, especially for short lengths of interlock armored cable, can take additional time. A/E consultant should provide time frame to Fermilab during design.

3.0 Installation, Fabrication, and Construction

A. Do not use cable link boxes for new 13.8 kV splices, connections, and taps.

B. High voltage cable splices and connections are often in tunnels and manholes open to non-electrical workers. This requires that splices have protective covers and junction boxes have protective cages.

Version Number	Date	Author	Change Summary
0	10/25/2012	R. Wielgos	Initial Release
1	03/01/2015	J. Niehoff	Revised section 1.3

Basis of Design

This section applies to the design and installation of grounding.

1.0 Scope

A. All power systems shall be grounded. Where there is a conflict between this Design Guide and National Electrical Code, the most stringent method shall be used.

1.1 Applicable Codes/Standards

A. International Building Code (IBC)
B. Institute of Electrical and Electronics Engineers
C. National Fire Protection Association (NFPA) Codes/Standards, but not limited to:
   - NFPA 70, National Electrical Code

1.2 Related Sections

A. Facilities Engineering Services Section Design Guide – Cables and Wires
B. Facilities Engineering Services Section Design Guide – Raceway and Duct Banks

1.3 Design/Construction Documents

A. Industry standard construction/documents.
B. Standard industry quality assurance, i.e., electrical acceptance tests. Coordinate with the FESS Engineering Electrical Engineer.

2.0 Design Criteria and Evaluation

A. System Grounding:
   - General: All power distribution systems shall be grounded.
   - Solid Grounding: For 480/277 Volts and 208/120 Volts wye grounded systems, a solid ground (using stranded copper conductors) shall be used. The neutral (grounded) wire of the system shall be connected to this solid ground at the source (transformer) only. Below ground (earth) and concealed connections shall be thermionic weld type (Cadweld) only.

B. Substation Grounding:
   - General: A grounding loop shall be installed around the perimeter of the substation pad with two cross connections, one to the primary and the other to the secondary transformer compartments and to the oil or air switch if they are used. The substation pad ground grid shall be solidly bonded to the building system ground ring grid.
   - Conductor Size: For substations 750 KVA and below, the loop and cross connections shall be 250 MCM bare stranded *uncoated* copper conductor. For substations above

750 KVA, the loop and cross connections shall be 500 MCM bare stranded *uncoated* copper.

C. Building Grounding:
- General: A ground loop consisting of a 500 MCM bare stranded copper shall be installed around the perimeter of the building.
- Location Of Conductor: The ground grid main conductor shall be located proximal to the building footing. It shall be installed at least 2-1/2' below the finished grade.
- Ground Rods: Same type as used for substations. Where no ground loop is going to be installed, ground rods shall be installed at a minimum distance of 12 feet from the building columns and connected to them by 500 MCM bare stranded *uncoated* copper. Ground rods connected to ground grids following the building perimeter shall be located at all building corner locations.
- Connections To Building Columns: All connections to building columns shall be thermionic weld type (Cadweld) and shall be made above finished grade wherever possible. Exposed ground conductors shall be supported every 4'.

D. Electrical Equipment Grounding:
- General: All electrical equipment shall be grounded by direct connection of their enclosures or frames to either the ground loop, or a steel column or structural member that is grounded, or an exposed ground bus within the building.

E. Switchboards, MCCs, Switch Racks, and Motor Starters
- Grounding conductor size: Per NEC or tables listed in this Design Criteria.
- Each device: To be individually grounded and connected to rack ground.

F. Raceways:
- All raceways shall contain an insulated grounding conductor. A green colored conductor (or black with green tape) shall be used to identify the ground conductor.
- Bonding of grounding electrode conductor: Where bare copper grounding electrode conductor is installed in metallic raceway, appropriate ground termination bushings shall effectively bond the connections on either end in accordance with NEC.

G. Cable Trays:
- All metallic CABLE TRAYS and similar race structures shall be effectively grounded to the building ground system utilizing a grounding conductor which is effectively secured to all sections of the cable tray.

H. Network Grounding
- A network/telecom grounding bus bar shall be provided in close proximity to the network rack space. Grounding shall meet a minimum standard as set forth in TIA/EIA-607-1995.

3.0 Typical Sketch Details

E-1 Transformer Grounding Arrangement

Version Number	Date	Author	Change Summary
0	11/26/2012	R. Wielgos	Initial Release
1	03/01/2015	J.Niehoff	Revise section 1.3, added network grounding & sketch

Basis of Design

This section applies to the design and installation of lighting.

1.0 Scope

A. Lighting system design shall be based on providing an adequate level of illumination, so that the users of the different facilities will be able to perform their work with safety and comfort, and by selecting energy efficient lamps and fixtures to provide those levels with the maximum saving of electrical energy.

B. The lighting control system should allow tracking of lamp hours, aiding in re-lamping of the proposed facility.

C. New buildings or retrofit buildings shall comply with the Guiding Principles for High Performance and Sustainable Buildings.

1.1 Applicable Codes/Standards

A. American Society of Heating, Refrigerating and Air-Conditioning
- ASHRAE 90.1 Energy Standard for Buildings

B. International Building Code (IBC)

C. Institute of Electrical and Electronics Engineers

D. National Fire Protection Association (NFPA) Codes/Standards, but not limited to:
- NFPA 70, National Electrical Code

1.2 Related Sections

A. Facilities Engineering Services Section Design Guide – Cables and Wires

B. Facilities Engineering Services Section Design Guide – Raceway and Duct Banks

1.3 Design/Construction Documents

A. Provide standard industry submittal requirements.

2.0 Design Criteria and Evaluation

A. <u>General Design Requirements</u>:
- All normal lighting fixtures (excepting night lights) shall be turned ON and OFF with toggle switches conveniently located near doors or entry. The use of three-way and four-way switches is encouraged for multiple door locations.
- Certain areas qualify for special lighting control using occupancy sensors to turn lights ON and OFF as personnel more infrequently occupy the space.

- high-bay interior lighting is most often addressed by using metal halide fixtures. In some special cases, interior High bay metal halide fixtures shall be controlled via special Fermilab design using timers and a lighting contactor arrangement. Emergency EXIT signs and egress lighting shall be powered utilizing an Interruptible Power Supply (IPS) or Uninterruptible Power Supply (UPS) system which provides a battery-driven alternating current source for a minimum of 90 minutes. The normal fixture loads for the IPS or UPS units shall be single-lamp fluorescent fixtures, using Motorola instant start 2-lamp ballasts and operating F32-T5-4100°K lamp tubes.

B. Levels: As a general rule *and per 41CFR Ch 101-20.107*, recommended lighting levels shall not exceed:

- Office Locations
  - General offices areas 30 foot-candles *(50 fc *).*
  - Training Rooms 75 foot-candles (dimmable)¤
  - Conference rooms 30 foot-candles
  - Accounting 20>1foot-candles.
  - Lobbies and corridors 20>1 foot-candles.
  - Lounges and washrooms 20>10 foot-candles.
  - Stairways 10>1 foot-candles.
- Experimental Facilities
  - General assembly areas 75 foot-candles.
  - Machine shops areas 75 foot-candles.
  - Fine bench work 125-300 foot-candles.*
  - Tech areas 75 foot-candles.
  - Computer rooms 50 foot-candles.
  - CRT screens 5 foot-candles.¤
  - Control rooms *75* foot-candles.¤
  - Lounges and washrooms *20>10* foot-candles.
  - Corridors and hallways *20>10* foot-candles.
  - Stairways *10>1* foot-candles.

* Obtained with general area and supplementary *(task)* lighting.
¤ Normally *T-5 fluorescent lamps with* dimming from *100>1%*.
> Down to.

- Underground Enclosures
  - Tunnels 20 foot-candles.
  - Assembly areas 75 foot-candles.
  - Stairways 10>1 foot-candles.
- Building Exteriors
  - Entrances 5 foot-candles.
  - Building surrounds 1 foot-candle.
- Parking Areas

- Low activity 5 foot-candle.
- Medium activity 1 foot-candle.
- Pedestrian security 2 foot-candles.

C. Types Of Fixtures: The type of fixture to be selected will depend on the location where it is going to be installed and the required illumination level. In general, the following types shall be used in the design:

- Office Buildings
  - Recessed instant start fluorescent fixtures, with two (2) *T5, 32-watt* lamps, prismatic lenses or parabolic louvers; depending on the desired illumination level, shall be used in general areas, lobbies and corridors; where suspended grid type ceilings are installed.
  - Surface mounted instant start fluorescent fixtures with prismatic lenses or parabolic louvers shall be used where dry wall type ceilings are installed or where there is not enough room in the plenum of suspended ceilings, on top of mirrors in washrooms, janitors' closets and stairways.
  - Recessed *halogen* fixtures with reflector type R lamps, can be used in areas with suspended grid type ceilings, such as lobbies, conference rooms, entrances and canopies for architectural enhancement.
  - Where dimming applications are required such as in conference and training rooms, electronic, high efficiency, low harmonic dimming ballasts shall be specified which are capable of dimming down to 1% of the original lamp level. Use Lutron dimming ballasts and switches.
  - Although there is a trend to use compact fluorescent lamps (CFL's) as replacements for incandescent lamps or new spot lamp fixture applications, budget CFL's have a notoriously high harmonic content. Any CFL selected for spot or down lighting shall be 4100°K having a total harmonic current distortion (THID) of less than 10%. Compact CFL's lampswith built in micro-chip controllers as manufactured by Trojan Inc. of Mt. Sterling, Kentucky are acceptable for this project. Acceptable low harmonic CFL electronic ballasts are the Motorola M1 (or M2)-CF-13 (18 or 26) - (T/B/Q)-S-120(277) as required.
- Experimental Facilities
  - Industrial type fluorescent fixtures with two lamps and 10% uplight, shall be used in general areas with ceilings heights up to 25 feet. They shall be equipped with 4-foot T5 rapid start lamps, or 8-foot T-8 slimline lamps, depending on the desired illumination levels. The Laboratory's preference for 2-tube 4-foot fluorescent fixtures is to utilize twin-tube 4-foot tandem connected fixtures with two (2) ballasts. This permits the use of T5 lamps driven by high efficiency, low harmonic ballast (the Motorola M2-IN-T5-277 instant-start version). The use of 8-foot tubes is discouraged.
  - Industrial type, high intensity discharge (HID) fixtures with 400 watts or 1000 watts, metal halide (multi-vapor) lamps, shall be used in high bay areas (above 25 feet). All HID ballasts shall be fitted with local fuse protection.

- Enclosed suspended or surface mounted fluorescent fixtures, normally with one or two *T5* rapid start lamps, shall be used in stairways and corridors.
- Where dimming applications are required such as in training and control rooms, electronic, high efficiency, low harmonic Lutron dimming ballasts shall be specified which are capable of dimming down to 1% of the original lamp level.

- <u>Underground Enclosures</u>
  - Radiation-hard fluorescent channel type strip fluorescent fixtures with one or two T8 lamps and metallic wire guards, shall be used in tunnels, underground enclosures and stairways. Single-lamp version used shall be Metalux SS-132-741LSLHTCP-WG/SS-4FT with metal guard or equal. Ballast used in beamline enclosures shall be Magnetek 741-L-SLH-TC-P (magnetic-core version). This deviation from electronic ballasts to iron-core is required because of the poor longevity of electronic ballasts in radiation areas. Standard operating voltage is 277 VAC. If the magnetic-core ballast become unavailable, remote ballasting is required using electronic ballasts.
  - In non-radiated assembly areas of underground enclosures, where there is sufficient ceiling height, industrial type fluorescent fixtures with 10% uplight, shall be used.
- <u>Building Exteriors</u>
  -
  - Surface mounted, weather proof, wallpack type fixtures 175-watt metal halide lamps, shall be used for perimeter lighting.
  - All fixtures shall have individual photocells and single in-line fuses.
  - Standard operating voltage shall be 277 VAC.
- <u>Parking Areas</u>
  - Pole mounted, wide spread type fixtures with 250 watts, 400 watts, or 1000 watts metal halide lamps, shall be used for parking facilities.
  - All fixtures shall have individual photocells and single in-line fuses.
  - Standard operating voltage shall be 277 VAC.
  - Parking lot fixtures shall conform to Fermilab standard design pole which is a Quality Lighting: 30-ft, Anodized black aluminum pole, 6" square, with built-in internal vibration dampers. Pole Cat # 1 / SQSA-6S30E-BC-BLKA-VD-D2180 (D290 on corner poles), with lamp head(s) 1(2) / SL-21-VS-MH-400-BLKA or equal.
- <u>Exit Signs</u>
  - Surface mounted, with stenciled red letters and arrows on white background, lighted exit signs shall be provided at required locations for the safe egress of general areas.
  - Exit signs shall meet NFPA and OSHA requirements for 90-minute operation during power failure.
  - Exit signs shall be powered from dedicated 277 VAC branch circuits used for EXIT signs alone or may be shared with night light circuits.

- Exit sign lamps in **non-radiation** zones shall normally be red Light Emitting Diode (LED) type.
  - Single-sided cast Aluminum, white EXIT signs shall be Chloride# CXLN1RW with internal battery backup and charger circuit. Voltage rating shall be 277/120 VAC, field selectable. LED Lamps.
  - Two-sided cast Aluminum, white EXIT signs shall be Chloride# CXLN2RW with internal battery backup and charger circuit. Voltage rating shall be 277/120 VAC, field selectable. LED Lamps.
  - Pop-out direction arrows are field selectable.
- Exit sign lamps in **radiation** zones (beamline enclosures) shall utilize dual fluorescent or incandescent lamps. LED lamp types and internal batteries are NOT permitted.
  - Single-sided cast Aluminum, white EXIT signs shall be Chloride# RFA1RW * with **NO** internal battery backup and charger circuit.
    * → specify (1) for 120 VAC or (2) for 277VAC rating.
    (i.e. RFA1RW2 is a 1-sided sign intended for 277 VAC)
  - Two-sided cast Aluminum, white EXIT signs shall be Chloride# RFA2RW * with **NO** internal battery backup and charger circuit.
    * → specify (1) for 120 VAC or (2) for 277VAC rating.
    (i.e. RFA2RW1 is a 2-sided sign intended for 120 VAC)
  - Pop-out direction arrows shall be field selectable.

D. Emergency Lighting

- Emergency lighting shall be provided for life safety in general areas, corridors, stairs, and exit doorways. Emergency lights shall provide a minimum of 90-minutes emergency power for safe egress illumination.
- Emergency lighting can be powered from wall-mounted battery packs, such as the Dual-Lite ML7E or fluorescent fixtures powered by generators, or battery pack driven inverter systems.

E. Lamps: Lamps used for specific lighting applications shall be selected with the criteria of energy efficiency, color rendition and life expectancy, in general the following types of lamps shall be specified:

- T5 rapid-start lamps, rated 28 W maximum, nominal length of 45.2 inches (1150 mm), 2900 initial lumens (minimum), CRI 85 (minimum), 4100K CCT, and average rated life of 20,000 hours unless otherwise indicated. Use Phillips F28T5 ALTO, 4100°K lamps or equal.
- High Intensity Discharge (HID) shall be metal halide (multi-vapor), mogul base, type "O" and clear.

F. Ballasts

- Ballasts for fluorescent lighting shall be energy efficient, high power factor, QM approved. For fluorescent fixtures they shall be Motorola electronic type, (instant start versions only).

- All ballast equipped fixtures shall have individual in-line fuses in the energized leg. The in-line fuses shall be located in the fixture housing except for parking lot or roadway pole light fixtures, in which case the in-line fuses shall be located in the hand-hole junction box at the base of the fixture.
- 3-lamp/4-lamp ballasts shall not be specified. Instead, two 2-lamp instant ballast be used. This eliminates the requirement to stock specialty ballasts as spares.
- Wherever possible 3-lamp and 4-lamp fixture design should be avoided. When higher light levels are required, dual ballasts should be considered.

G. Voltage

- Voltage for lighting loads shall be 277 Volts, 1□,unless that voltage is not available, in which case 120 Volts, 1□,shall be used.

H. Light Fixture Switching

- Manual Switching shall be provided by the installation of single pole 20 Amp, 277 volt rated, wall mounted switches or by single pole, 277 Volts, molded case breakers (for night lights only), installed in lighting panels and UL approved for switching of lighting loads (SW labeled). 3-way and combination 3-way/4-way switch combinations shall be used as required for multiple entry points. Normal lighting shall not be switched ON/OFF from panelboard locations.
- Automatic Switching shall be provided for large office buildings or general areas and it shall be in the form of timers or low voltage computer controlled systems with manual override.
- Photocell Control shall be used for all outdoor floodlights and parking areas fixtures.
- Occupancy Sensor Controlled units shall be used whenever practical. Combination ultrasonic/infrared heat sensing versions should be selected. Wattstopper is Fermilab's current standard. Switch/sensor series controlled combinations are acceptable.

I. Stroboscopic Effect

- Stroboscopic effect is noticeable in moving objects when HID lamps are used to light general areas, to minimize this annoyance, fixtures shall be powered from 3□,AC, lighting branch circuits, and they shall be wired in such a way that NO two consecutive fixtures will connected to the same phase.

J. Lighting Calculations

- Lighting calculations are beyond the scope of this design criteria, however depending on the areas to be illuminated: indoors or outdoors, calculations shall be made and luminaries selected by using the Zonal-Cavity Method, Point-by-point Analysis, or Lumen Method.

K. Lighting Design General Guidelines: The following general guidelines shall be used on the design of lighting systems:

- For Fluorescent Fixtures:
  - If they are surface mounted, the spacing between rows of fixtures shall be less than 1.6 of the mounting height of the fixture.

- If the fixtures are recessed, and are installed in single rows or in single units single spaced, the spacing between rows of fixtures shall be less than 1.3 of the mounting height, with 2 or 4 feet between fixtures lengthwise.
- When high levels such as 150 to 250 foot candles are sought, solid rows of wraparounds or recessed fixtures shall be installed.
- For low levels use a diamond pattern when installing the fixtures.
- Compact CFL's lamps with built in micro-chips are acceptable for this project. Any CFL selected for spot or down lighting shall utilize 4100°K or 6500°K having a total harmonic current distortion (THID) of less than 10% and a CRI index greater than 80.

o For HID Fixtures:
- Use a SC (Spacing Criterion) so that the S/MH (Spacing to Mounting Height) ratio is 0.3 to 0.5 than the rated SC of the luminaire.
- Always use in-line single fuse holder at the fixture to ensure that a single defective ballast will not take-out a string of fixtures.
- Always specify borosilicate glass, hinged lens covers for all HID fixtures. Lens covers guard against hot metal and glass falling on people below when some lamps fail. Borosilicate glass filters out some levels U.V.

o For Aisle Space Lighting with high stacks on both sides, like in storage areas, mount luminaries no higher above the stacks than a distance equal to half the aisle width.

o If Reflectances Are Unknown, use 30% for walls, 30% for ceilings and 20% for floors.

o Auxiliary Lighting Contactors. Where specified on drawings, auxiliary lighting contactors shall be Square-D Class 8903, Type L with number of poles and coil voltage as required.

o Lighting access shall be maintained for re-lamping, ballast replacement and other maintenance when all program and process equipment is installed and operational.

Version Number	Date	Author	Change Summary
0	11/26/2012	R. Wielgos	Initial Release
1	03/01/2015	J. Niehoff	Added ASHRAE 90.1 & HPSB
2	04/27/2017	R. Wielgos	Added type "O" lamps to HID specification

Basis of Design

This section applies to the low voltage power distribution system.

1.0 Scope

A. This section implies to low voltage.

1.1 Applicable Codes/Standards

A. International Building Code (IBC)
B. National Fire Protection Association (NFPA) Codes/Standards, but not limited to:
   - NFPA 70, National Electrical Code

1.2 Related Sections

A. Facilities Engineering Services Section Design Guide – Cables and Wires
B. Facilities Engineering Services Section Design Guide – Raceway and Duct Banks

1.3 Construction Submittals

A. Standard construction submittal requirements
B. Standard industry quality assurance, i.e., electrical acceptance tests. Coordinate with the FESS Engineering Electrical Engineer.

2.0 Design Criteria and Evaluation

A. Design Requirements
   - Power monitors shall be Square-D PM820 with Ethernet communications card or current updated model.
   - Power monitors shall be located on a panel or hinged cover plate which can be swung open to allow access to the rear terminal connections.
   - Wire terminal connections shall be made using ring-tongue connectors only.
   - Wire color code types shall follow color coding standard.
   - Wire shall be stranded copper #12 AWG minimum.
   - All wiring shall be neatly cable laced and conductors identified with number tags on all terminations which conform to the drawings.

B. Isolation
   - A safety means of isolating the voltage shall be provided which permits the safe removal of the power monitor from energized conductors when necessary for maintenance or equipment removal.

- A voltage isolating breaker or isolating safety disconnect switch shall be used to remove all exposed AC voltages (greater than 50-volts) to workman when performing service on the equipment. Either of the two (2) options below will suffice:
  - ISOLATING CIRCUIT BREAKER from panelboard or system being monitored shall be used. Provided the breaker is capable of LOTO.
  - A commercial grade isolating safety disconnect switch may be used and located inside or adjacent to the power monitor cell. Disconnect switch shall open all voltage conductors and be capable of LOTO.
- An AVO International isolating switch, Catalog # 210-IW shall be used as an isolating shorting switch for the current transformers and a second isolating switch for the voltage conductors. The isolating switch shall be mounted in a manner that the switches swing downward to open.

C. Safety

- Appropriate nameplates are required to indicate that only authorized personnel are permitted to work on the system.
- A laminated safety procedure sheet shall be affixed to the interior indicating the operating procedure for using the isolating/shorting block.
- Auxiliary safety measures, such as padlock and hasp are acceptable as additional safety protective barriers.

Version Number	Date	Author	Change Summary
0	11/26/2012	R. Wielgos	Initial Release
1			

Basis of Design

This section applies to the medium voltage power distribution system.

1.0 Scope

A. The medium power distribution 13.8 kV, 3-phase, 3-wire, low resistance grounded wye system. All new services shall be connected to this system.

1.1 Applicable Codes/Standards

A. International Building Code (IBC)
B. Institute of Electrical and Electronics Engineers Codes/Standards, but no limited to:
   a. National Electric Safety Code
C. National Fire Protection Association (NFPA) Codes/Standards, but not limited to:
   a. NFPA 70, National Electrical Code

1.2 Related Sections

A. Facilities Engineering Services Section Design Guide – Cables and Wires
B. Facilities Engineering Services Section Design Guide – Raceway and Duct Banks

1.3 Design/Construction Documents

A. Standard construction submittal requirements
B. Standard industry quality assurance, i.e., electrical acceptance tests. Coordinate with the FESS Engineering Electrical Engineer.

2.0 Design Criteria and Evaluation

A. Careful design considerations should be given to minimize the need for workers to be exposed to energized cables or equipment. Limited access locations, such as electrical vaults, should be designed to enable workers to de-energize all cables and equipment in the space for maintenance without significant outages to facilities. This can be done through design configurations that include minimizing the number of feeders in a particular space and a diverse path of looped feeders.
B. Medium voltage cable systems are standardized jacketed, EPR insulated, aluminum with copper concentric neutral 750MCM, #4/0 and #2/0.
C. Service conductor ductbanks shall be concrete encased and provided with spare cells for future services or cable replacements.
D. Conduits for medium voltage installations are rigid steel in buildings and street crossings; for direct buried or concrete encased applications, schedule 80 PVC or HDPE pipe may be used. Medium voltage cables shall not be direct buried.

E. Termination and pulling vaults for medium voltage distribution shall be 7-feet depth x 10-feet width x 10-feet in length.

F. All cabling in vaults and manholes shall have fire wrapping.

G. Grounding systems shall be provided for all primary distribution ductbanks, utility tunnels, manholes, pulling vaults, transformer pads, switch pads, etc.

H. Pad mounted switches shall be S&C model PMH, live front equipment.

3.0 Installation, Fabrication, and Construction

A. Do not use cable link boxes for new 13.8 kV splices, connections, and taps.

B. Medium voltage cable splices and connections are often in tunnels and manholes open to non-electrical workers. This requires that splices have protective covers and junction boxes have protective cages.

C. If new projects interface with power that originates from end of life electrical distribution equipment, the project shall evaluate and replace end of life equipment as directed by project management. Examples of such are: Oil switches should be replaced with air switches.

Version Number	Date	Author	Change Summary
0	11/26/2012	R. Wielgos	Initial Release
1	02/25/2013	R. Wielgos	Added Design Guide for Workers and Energized Cables in 2.0
2	03/01/2015	J.Niehoff	Revised section 1.3
3	10/10/2017	R. Wielgos	Revised Primary Cable Size

Basis of Design

This section applies to the design and installation of motors.

1.0 Scope

A. Motors shall be energy efficient and conform to the following, unless more stringent requirements are found in National Electric Code.

1.1 Applicable Codes/Standards

A. International Building Code (IBC)
B. Institute of Electrical and Electronics Engineers
C. National Fire Protection Association (NFPA) Codes/Standards, but not limited to:
   a. NFPA 70, National Electrical Code

1.2 Related Sections

A. Facilities Engineering Services Section Design Guide – Motor Control Centers

1.3 Design/Construction Documents

A. Standard construction submittal requirements
B. Standard industry quality assurance, i.e., electrical acceptance tests. Coordinate with the FESS Engineering Electrical Engineer.

2.0 Design Criteria and Evaluation

A. General Requirements:
All AC motors shall be energy efficient, general use, constant load, and shall be rated according to the following classification:
- AC Motors over 10 HP to 350 HP shall be rated 460 Volt, 3ϕ, 60 Hz.
- AC Motors over 350 HP up to 500 HP shall be rated 460 Volt or 2300 Volt, 3ϕ, 60 Hz, depending on the location of the motor relative to the source of power and on voltage dips during starting.
- General Purpose, 3ϕ, AC motors, shall be squirrel cage induction type, Nema Design B for normal torque applications, continuous duty, with Nema Class F insulation, 1800 RPM maximum speed, 40°C ambient.
- General Purpose, 1ϕ, AC motors, shall be capacitor start, continuous duty, with Nema Class F insulation, 1800 RPM maximum speed, 40°C ambient. In general,
- AC motors for outdoor or indoor environments containing dust, dirt, water, etc. shall have totally enclosed fan-cooled (TEFC) type enclosures.
- Medium Voltage AC Motors (2300 Volt and above) shall have drip-proof type enclosures for installation on indoor clean areas and weather protected Type II enclosures for outdoor installation.

- VFD Duty Motors shall be fitted with grounded shaft kits that include ground rings and insulated bearings to eliminate premature bearing wear.

B. Service Factor:

- General Purpose, drip-proof, AC, 60 HZ, motors shall normally have the following Nema service factors:
  - 1/2 HP through 200 HP= 1.15
  - 250 HP through 500 HP= 1.0
- Totally Enclosed Fan-Cooled (TEFC) motors shall normally have a service factor conforming to the values shown in #1 above.

C. Motor Starting:

- Normal Starting Method for squirrel cage, induction type, polyphase motors shall be full voltage across-the-line.
- If An Analysis Of The Application indicates that full voltage starting cannot be used and that the starting current, must be limited, either because of the construction of the motor, nature of the driven equipment, or limitations of the power system, reduced-voltage starting must be used.
- When Starting Current Restrictions are unusually severe, a solid state soft-start type of motor starter shall be specified.

D. Variable Frequency Drives:

- To minimize harmonic generation into the supply system, 12-step PWM VSD inverters shall be specified. Alternate methods to mitigate harmonic distortion can also be selected pending economic considerations.
- A manual bypass, automatic bypass, or redundant drive means shall be considered for every application. For critical-load VSD drive applications, all design reviews shall review failure modes and how backup operation can be accomplished.
- VSD startup operations involve a degree of complexity and adjustment to match the drive with the load. Therefore, all projects shall require a factory trained field technician to be present for startup and checkout of new VSD inverters.
- To minimize VSD undervoltage and nuisance voltage trips, mitigation methods shall consideration for every application. This may be accomplished by specifying VSD's with sufficient voltage tolerance ranges, surge/transient suppressors, or appropriate isolation transformers may be utilized.
- Wherever possible, VSD's specified shall consider field service response requirements, Fermilab technical staff training needs, and attempt to maintain consistency with Fermilab's spare parts inventory.
- To minimize exposure to the operator, keypad should be remotely mounted, approximately 10 feet, away from the drive or an additional enclosure with window to access VFD's keypad.

E. Motor Phase-Loss And Overload Protection:

- Phase-Loss Protection
  - Motors shall be protected against phase-loss or phase under-voltage conditions.
- Overload Protection

- Motors shall be protected against excessive heating due to overloads or failure to start by means of motor and branch circuit overload protection.
- In general, overload protection for continuous duty motors shall be as determined from NEC.
- Motors with Service Factors that exceed 1.0 can be safely operated within the motor's service factor range on a continual basis or as determined from NEC.

F. Combination Motor-Starter With Disconnects

- Combination motor-starter disconnects shall NEMA 1 rated for indoor use and NEMA 3R rated for outdoor usage. In corrosive atmospheres, NEMA 4X (stainless steel) shall be used.
- Circuit breakers shall be MCP rated with adjustable trip settings. All breakers shall have a minimum interrupt rating of 65 KAIC.
- Overload heater sizes by design shall not exceed 100% of the FLC rating of the motor. Overload selection shall be based on the motor nameplate full load current. In special post-installation field situations where motor load dynamics change requiring higher rated overload protective devices, replacement overloads shall not exceed the maximum ratings noted by NEC 430-32.
- A minimum Size-1 starter shall be used. All Advantage starters shall come equipped with a remote monitoring Pony connection. Advantage *Freedom* starter line shall NOT be used.
- Control transformers for 120 VAC circuits shall have sufficient capacity to operate the starter contactor and auxiliary devices connected to it, with 50% reserve load capacity. The secondary of the transformer shall be grounded at the X2 terminal using a "GREEN" conductor secured to the chassis ground with a ring-tongue compression lug. Individual secondary fuse protection shall be mounted "ON" or "PROXIMAL" to the transformer.
- Unless specified otherwise, motor starter controls shall include one (1) red "RUNNING" indicating light, one (1) green "OFF" indicating light, one (1) "MANUAL-OFF-AUTO" control switch or "ON-OFF" pushbuttons, and two (2) normally-open (NO) and two (2) normally-closed (NC) auxiliary contacts.
- Control wiring shall have wire marker tags at all terminations to identify wiring per control schematic.
- Nameplate on enclosure door shall indicate "APPARATUS CONTROLLED", "VOLTAGE RATING", and "FED FROM" data of the power circuit used.
- Nameplates shall be fastened using stainless steel screws or rivets. Sharp or protruding screw/rivet fastener edges will be removed or ground flush with surface.
- Embedded vibration analysis sensors for motors over 25 HP.

Version Number	Date	Author	Change Summary
0	11/26/2012	R. Wielgos	Initial Release
1	03/01/2015	J.Niehoff	Added remote keypad access to drives

Basis of Design

This section applies to the design and installation of motor control centers.

1.0 Scope

A. Motor control centers typically for feeding fans and pumps.

1.1 Applicable Codes/Standards

A. International Building Code (IBC)
B. Institute of Electrical and Electronics Engineers
C. National Fire Protection Association (NFPA) Codes/Standards, but not limited to:
   a. NFPA 70, National Electrical Code

1.2 Related Sections

A. Facilities Engineering Services Section Design Guide – Motors

1.3 Design/Construction Documents

A. Standard construction submittal requirements
B. Standard industry quality assurance, i.e., electrical acceptance tests. Coordinate with the FESS Engineering Electrical Engineer.

2.0 Design Criteria and Evaluation

A. General Requirements:

All Motor Control Centers shall meet the following general requirements:

- Be free standing with normal access from the front.
- Conduit access shall be from the top, bottom, and sides.
- All copper main power bus distribution shall be in a non-readily accessible rear portion of the MCC unit. Main bus bracing shall be a minimum 65 KAIC.
- The horizontal main power bus shall located in the upper or top portion of the MCC.
- All copper vertical power bus section shall be braced for a minimum 65 KAIC.
- All copper neutral and ground bus bars shall be located in the bottom portion of the MCC and braced for 65 KAIC.
- Cable (load and control) routing sections are normally accessed at the front of the MCC in easy to remove sections at the top and the bottom of the MCC, and by right-hand side hinged covers which run from top-to-bottom as viewed from the front.

Version Number	Date	Author	Change Summary
0	11/25/2012	R. Wielgos	Initial Release
1	03/01/2015	J. Niehoff	Revised section 1.3

Basis of Design

This section applies to nominal voltage and phase rotation.

1.0 Scope

A. The normal power is distributed from the substations through enclosures and underground ductbanks. This section implies to the nominal voltage and phase rotation.

1.1 Applicable Codes/Standards

A. International Building Code (IBC)
B. Institute of Electrical and Electronics Engineers
C. National Fire Protection Association (NFPA) Codes/Standards, but not limited to:
   a. NFPA 70, National Electrical Code

1.2 Related Sections

A. Facilities Engineering Services Section Design Guide – Cables and Wires
B. Facilities Engineering Services Section Design Guide – Raceway and Duct Banks

1.3 Design/Construction Documents

A. Standard construction submittal requirements
B. Standard industry quality assurance, i.e., electrical acceptance tests. Coordinate with the FESS Engineering Electrical Engineer.

Design Criteria and Evaluation

A. Nominal Voltage: System design shall specify and utilize the following nominal voltages.
   - Medium Voltage: 13.8 KV and 4.16 KV
   - Low Voltage:
     - 480/277 VAC polyphase, 4-wire system with ground
     - 208/120 VAC polyphase, 4-wire system with ground
     - 240-120 VAC single phase, 2 or 3 wire systems with ground as required

B. Phase Rotation Sequence:
   - Phase Relationships In AC Electrical Power Distribution
   - All three phase AC power distribution throughout the Laboratory shall conform to the positive phase rotation convention. Positive phase rotation shall be understood as Phase A -> Phase B -> Phase C, where Phase B lags Phase A and Phase C lags Phase B.
   - The voltage phasor diagram and time-based voltage waveforms of the three phase AC electrical power distribution system are illustrated in Figure 1 as reference.

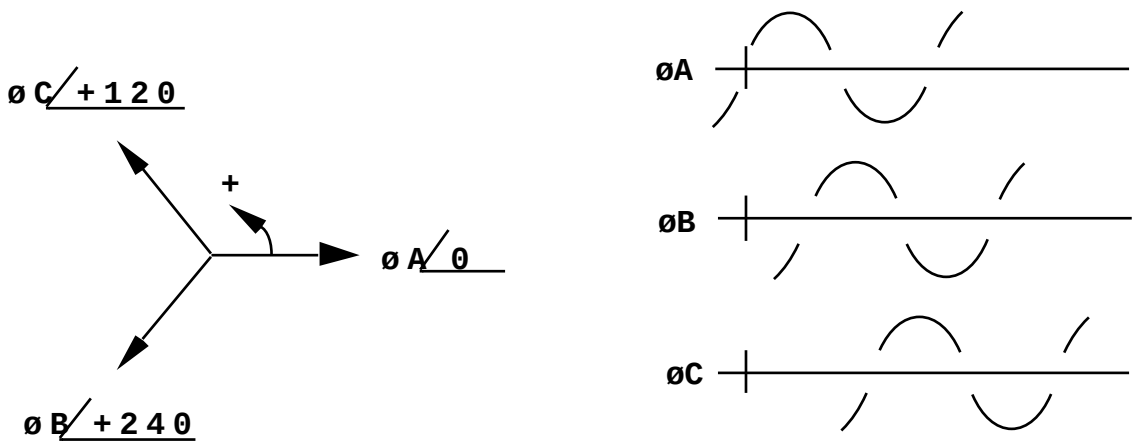

Figure 1 - Three Phase Phasor Diagram and Time-Based Waveforms

   - The phase position of all electrical conductors entering electrical distribution equipment such as breakers, switch gear, and distribution panels viewed with respect to the front of principal control face shall be Phase A, Phase B, Phase C from left to right, top to bottom, or front to back. Where no principal control face is discernible, the electrical conductor most nearly north or east shall be Phase A.
   - Phase Rotation In Switchboards And Panelboards:
     - Phase rotation sequence shall be A-B-C left-to-right, from top-to-bottom, front-to-back or in a clockwise fashion as viewed from the front looking at the device under consideration.

- In general, switchboard and panelboard load distribution circuit breakers shall be A-B-C top-to-bottom whether viewing the left side or right side of the panelboard. Care should be noted during the design phase that some panelboard arrangement schemes differ on the left side, providing C-B-A phase sequence from top-to-bottom which differs from the A-B-C sequence on the right hand side. Ideally, the left and right hand phase rotations should both be A-B-C from top-to-bottom. Any deviations to normal A-B-C phase sequences due to hardware configuration should be carefully noted on drawings and on the equipment (i.e. utilize descriptive labels on panelboard doors, etc.).
- Some examples of various modes of entry of three phase power into most electrical equipment are illustrated in Figure 2. Due to the inherent unique design of Square-D I-Line™ panelboards, entry to these panels and their associated circuit breakers is an exception to the standard form of entry and is separately detailed in Figure 2.

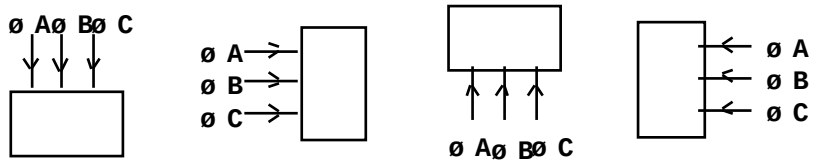

Standard Entry for Most Equipment

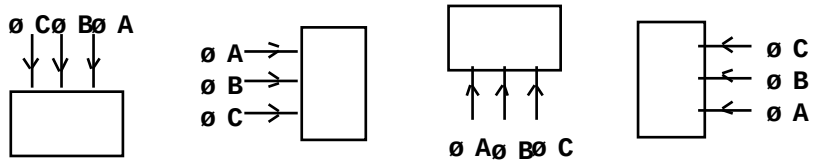

Standard Entry for Square-D I-Line Panels

Figure 2 - Three-Phase Power Entry Into Electrical Distribution Equipment (As Viewed From Front)

- Some switchboards have incoming bus networks arranged from front-to-back. For such configurations, the phase rotation sequence shall be A-B-C from front-to-back.

o <u>Phase Rotation In Disconnects, Starters, Power Supplies, Ups Units And Other Misc. Equipment</u>:

- Disconnects, motor starters, power supplies, UPS units, and specialty utilization load devices shall be connected for A-B-C phase rotation left-to-right as viewed from the front.

- 480/277 and 208/120 polyphase receptacles (including welding outlets) shall be connected so the phase sequence is clockwise A-B-C as viewed from the front of the receptacle and beginning with the first pin after the neutral pin. Neutral pins are normally arranged as the top pins.

C. Phase Rotation Alignment And Color Coding:

- Phase Alignment begins at the substation level.
  - Care shall be taken during the design stages and installation phase of work to align all PHASE-A connections with the source supply from the highest element (13.8KV source) down to the lowest load element (utilization device disconnect or starter) even while passing through step-down transformer stages. Phase rotation alignment shall be verified at all stages of power distribution BEGINNING at the 13.8 KV distribution level and cascading downward to the low voltage load distribution level.
  - Design drawings and specifications for shall clearly address the issue of phase rotation, sequence, alignment, and conductor color code identification on all new projects.

Version Number	Date	Author	Change Summary
0	11/26/2012	R. Wielgos	Initial Release
1	03/01/2015	J. Niehoff	Revise section 1.3

Basis of Design

This section applies to the design and installation of raceways.

1.0 Scope

A. The power system raceways, including underground duct banks for networking, at Fermilab.

1.1 Applicable Codes/Standards

A. International Building Code (IBC)
B. Institute of Electrical and Electronics Engineers
C. National Fire Protection Association (NFPA) Codes/Standards, but not limited to:
   - NFPA 70, National Electrical Code
D. Fermilab's ES&H Manual (FESHM)
   - Chapter 9130, Management and Use of Cable Tray System
   - Chapter 6040.3, Protection of Openings in Fire Rated Assemblies

1.2 Related Sections

A. Facilities Engineering Services Section Design Guide – Cables and Wires
B. Facilities Engineering Services Section Design Guide – Raceway and Duct Banks
C. Facilities Engineering Services Section Design Guide – Fire Alarm

1.3 Design/Construction Submittals

A. Standard construction submittal requirements
B. Standard industry quality assurance, i.e., electrical acceptance tests. Coordinate with the FESS Engineering Electrical Engineer.

2.0 Design Criteria and Evaluation

A. <u>Underground Duct Banks:</u> Underground duct banks are non-metallic conduit runs encased in a concrete envelope and installed outdoors between manholes, buildings, outdoor substations or similar structures. Underground duct banks shall be as follows:

   - <u>Duct Type:</u> Polyvinyl Chloride (PVC) Type EB (encased burial) as manufactured by Carlon. Use type EB-35. For under roadway applications, reinforce with minimum of three (3) staggered rebars. Rebars should extend a minimum of ten (10) feet beyond edge of roadway. For electrical ductbank sections running parallel to roadways, those sections within ten (10) feet of the roadway (or sections likely to have parked vehicles on shoulders) should be similarly rebar enforced.

- Duct Offsets: Not more than 5° at any coupling.
- Duct Horizontal Bends: Radii not less than 36-inches.
- Distance Between Pull Points:

Total Degree of Bends	Maximum Distance Between Pull Points
0°- 45°	600 feet
45°- 90°	300 feet
90°- 180°	200 feet
180° - 270°	150 feet

- Minimum Duct Slopes: Three (3) inches per 100 feet from building to manhole, manhole to manhole from high point between manholes in both directions.
- Duct Joints: Use solvent or adhesive recommended by manufacturer and stagger joints.
- Duct Spacing: Two (2) inches minimum between walls of adjacent ducts.
- Duct Spacers: Manufactured plastic spacers placed at five (5) foot intervals and staggered approximately six (6) inches. Use Underground Devices Inc., spacers (Cat No. 5W20-2) or an approved equivalent.
- Duct Risers: Same material as ducts, 90°elbows, thirty-six (36) inches minimum radius for 4 inch and 5 inch ducts.
- Duct Terminations:
  - End bells flush with manhole walls.
  - Flush with top of substation concrete pad.
  - Three (3) inches above finished floor.
- Concrete Envelope:
  - Three (3) inches all around the duct bank.
  - Encasement concrete proportioned and mixed to produce a 28-day strength of 2,500 psi.
  - Dyed red by adding red oxide on top when concrete is still wet.
  - Steel reinforced at locations of extremely heavy traffic.
- Duct Bank Earth Cover:
  - Twenty-seven (27) inches minimum from finished grade to top of concrete envelope.
  - Use only Fermilab approved granular material for trench backfilling.
  - For electrical raceways, red plastic construction tape marked "ELECTRIC" should be placed on top of sand cover before earthen backfill. Communications ductbanks shall use similar construction and be identified utilizing a similar tape with the wording COMMUNICATIONS”.
- Spare Ducts: Minimum of 20% in each duct run.

B. Underground Conduit Banks: Underground conduit banks are metallic conduit runs encased in a concrete envelope and installed in or below the floor slab within the perimeter of the building. Underground conduit banks shall be as follows:

- Conduit Type: Intermediate Metallic Conduit.(IMC). Allied IMC or approved equal.
- Conduit Size: One (1) inch minimum.
- Conduit Bends: No more than three (3) 90° bends (270° total) between pulling points such as boxes, fittings, etc.
- Radius of Bends: As shown on Table 346-10 of the NEC.
- Maximum Conduit Straight Runs: 300 feet between pull points.
- Minimum Spare Conduits: Approximately 20% of the same size as the largest conduit in the bank.
- Conduit Risers: Three (3) inches above finished floor threaded and protected with capped bushings.

C. Exposed Conduit:

- Types: Rigid hot dipped galvanized steel, Intermediate Metallic Conduit (IMC), or Electric Metallic Tubing (EMT) for 120/208V circuits.
- Approved Sizes: ¾" minimum for RGS, IMC, and EMT. Exception for fire and communications applications will permit use of minimum ½" EMT.
- Bends: Radius as shown on Table 346-10 of the NEC.
- Runs:
  - Straight: 250 feet maximum.
  - With the equivalent of two 90°bends; 200 feet maximum.
  - With the equivalent of three 90°bends; 150 feet maximum.
- Type of Supports: Conduit clamps or galvanized "U" bolts.
- Distance Between Supports: To comply with Article 346-12 of the NEC.
- Clearances: At least twelve (12) inches from hot water lines, steam pipes, etc., and 1/4 inch from walls or ceiling.
- Terminations:
  - Locknuts on both inside and outside of indoor/dry usage sheet metal enclosures. All bushings shall have insulated throat inserts.
  - Rigid steel and IMC applications used for outdoor or wet applications shall use threaded conduit hubs with o-ring seal, insulated throat, and bonding locking nut. Zinc plated, malleable-iron , dichromate dipped construction. Appleton HUB-100MB or equal.
  - Steel flexible conduit (Greenfield) or PVC jacketed (liquid tight) flexible conduit depending on environment, eighteen (18) inches to thirty-six (36) inches long (maximum) at motors, dry-type transformers, limit switches, solenoids, etc., with compatible insulated throat conduit fittings.
- Couplings:

- Rigid and IMC conduit couplings shall be standard hot-dipped, galvanized/zinc-plated couplings furnished by conduit manufacturers. Union couplings shall be malleable-iron 3-piece, Appleton EC-100 or equal.
- EMT conduit couplings shall be malleable cast iron compression-type. Appleton NTCC-100 or equal.

D. Networking (The below cabling is used for planning the number and size of empty conduits and needs to be coordinated with the Design Team. The actual installation of cabling is typically done by others.)

- Communication Ducts: Minimum of 2 - 4" or 5" diameter conduit shall be installed from the network space to an existing communications manhole. Care should be taken to ensure sufficient duct capacity is available from the selected manhole to the nearest fiber optic network presence.
- Fiber Optic Cabling**:** Minimum of a 96ct SMe outdoor rated fiber optic cable shall be installed from the network space to the nearest existing fiber optic network presence. In some cases, a Multi-mode cable will also need to be installed.
- FIRUS Fiber Connections**:** A fiber optic trunk cable shall be installed from the FIRUS mini for the building to the network rack space.
- Telecommunications: New buildings should have a minimum 50 pair telephone service feed cable. There should be an approved path for the feed cable from the outside plant network (nearest manhole). All internal phone line locations shall be installed via minimum 1" conduit through all floors and walls, and shall be terminated in a faceplate or SMB. This conduit can be shared with network locations, with a maximum of 4 cables per 1" conduit. A minimum 24"x36"x3/4" plywood "backer board" shall be installed at the location of the network interface. A ground cable shall be installed to the network room "telecom ground".
- Network Switch**:** A minimum of 1 – 24 port network switch will be installed and provisioned by Fermilab CD Network Services. Purchase of this equipment should be included in the building project budget.

Version Number	Date	Author	Change Summary
0	11/26/2012	R. Wielgos	Initial Release
1	03/01/2015	J. Niehoff	Added network

Basis of Design

This section applies to the design and installation of receptacles.

1.0 Scope

A. Receptacles are installed at convenient locations throughout the power distribution system to provide a means of connecting temporary loads or electrical equipment that normally is equipped with a cord and plug by the manufacturer.
B. New buildings or retrofit buildings shall comply with the Guiding Principles for High Performance and Sustainable Buildings.
C. Receptacles shall comply with section 8 of ASHRAE 90.1

1.1 Applicable Codes/Standards

A. American Society of Heating, Refrigerating and Air-Conditioning
   - ASHRAE 90.1 Energy Standard for Buildings
B. International Building Code (IBC)
C. Institute of Electrical and Electronics Engineers
D. National Fire Protection Association (NFPA) Codes/Standards, but not limited to:
   - NFPA 70, National Electrical Code

1.2 Related Sections

A. Facilities Engineering Services Section Design Guide – General

1.3 Design/Construction Documents

A. Standard construction submittal requirements

2.0 Design Criteria and Evaluation

A. General: Receptacle boxes shall not be used as junction boxes for other circuits, such as lighting or other branch loads.
B. Automatic Receptacle Control: The following shall be automatically controlled:

a. At least 50% of all 125-volt 15- and 20-amp receptacles in all private offices, conference rooms, rooms used primarily for printing and/or copying functions, break rooms, classrooms, and individual workstations

b. At least 25% of branch circuit feeders installed for modular furniture not shown on the construction documents.

This control shall function on

1) a scheduled basis using a time-of-day operated control device that turns receptacles off at specific programmed times—an independent program schedule shall be provided for controlled areas of no more than 5000 ft2 and not more than one floor (the occupant shall be able to manually override the control device for up to two hours),
2). an occupant sensor that shall turn receptacles off within 20 minutes of all occupants leaving a space, or
3). an automated signal from another control or alarm system that shall turn receptacles off within 20 minutes after determining that the area is unoccupied.
All controlled receptacles shall be permanently marked to visually differentiate them from uncontrolled receptacles and are to be uniformly distributed throughout the space. Plug-in devices shall not be used to comply with this automatic receptacle control.

Exceptions: Receptacles for the following shall not require an automatic control device:
1. Receptacles specifically designated for equipment requiring continuous operation (24 hours/day, 365 days/year)
2. Spaces where an automatic control would endanger the safety or security of the room or building occupant(s).

C. Energy Monitors: Measurement devices shall be installed in new buildings to monitor the electrical energy use for receptacle circuits, separately from the lighting, hvac systems and total electrical energy per Section 8.4.3.1 of ASHRAE 90.1.
Exception: Up to 10% of the load shall be allowed to be from other electrical loads.

D. Types: The type of receptacle to be installed depends on the equipment to be used at the location, in general, the following types are specified:

- Convenience Receptacles, these are normally 1ϕ, 2 Pole, 3-wire grounding, 20 Amperes, 125 Volts AC, duplex receptacles (Hubbell 5362); and are installed in offices or general areas to provide power for cord and plug office equipment such as typewriters, personal computers, portable power tools, task lights, etc.
- Power Receptacles, are normally 120/208 volt 3ϕ, 5-wire grounding, 20 or 30 Amperes, 250 Volts AC rated, single receptacles, NEMA standard L21-20R or L21-30R. These power receptacles are installed in experimental areas to provide power for vacuum pumps or small power supplies.
- Welding Receptacles, these are normally 3ϕ, 3 Pole, 4 wire grounding, 60 Amperes, 600 Volts AC, single receptacles (Crouse-Hinds AR 632); and are installed in experimental areas to provide power for welders and medium size power loads such as large size portable heaters or battery chargers.
- Isolated Ground, these are similar to general purpose convenience receptacles, single or duplex type, 1ϕ, 2 Pole, 3 wire grounding, 20 Amperes, 125 Volts AC, but with the ground contacts isolated from the mounting strap by an insulating barrier. This type of receptacle is clearly marked with an orange color triangle in the face of the receptacle or it will be totally orange colored and shall be used for sensitive electronic equipment where a "pure" ground is a most. Hubbell lG-5361(single) or IG-5362 (duplex)

- Ground Fault Circuit Interrupter, these are general purpose duplex type convenience receptacles similar as type 1, but equipped with ground fault interrupter protection and shall be used on wet locations such as wash-rooms and locker-rooms, and also outdoors; unless the branch circuit breaker protecting the receptacles in those locations is of the ground fault circuit interrupter type. Hubbell GF-5362.
- 120-VOLT Surge Suppression cord and plug strips are normally used to protect sensitive electronic equipment such as personal computers from transient voltage surges. Due to a number of smoking and fire damaged MOV suppressor versions, suppressor strips utilizing Metal Oxide Varistors (MOV) are prohibited. New "suppressor style" receptacle strip units shall use Silicon Avalanche Diode (SAD) technology which has an inherently long life and a very fast response time. Units specified for this purpose shall be Transtector. These units incorporate a protective circuit breaker and are 15-amp rated at 120 VAC.
- 120-VOLT multiple receptacle cord and plug power strips are intended for non-computer, non-electronic loads such as drill and other utility loads. These units incorporate a protective circuit breaker and are 15-amp rated at 120 VAC.

E. Grounding

- All Receptacles shall be grounded by connecting the green colored insulated grounding conductor carried with the branch circuit to the green grounding screw in the receptacles.

F. Face Plate

- All Receptacles shall be protected by a metallic face plate made of stainless steel.
- Each Receptacle shall be marked with the identifying code of its source panel and breaker, with an engraved plastic tape 3/4" size. Red tape with white lettering shall be used for all AC voltages 250 Volts and above, while brown tape (with white lettering) shall be used for AC voltages below 250 Volts. FED FROM tapes shall indicate the full panel designation, the circuit breaker number and the voltage. Character height shall be a minimum 3/16".
- All FED FROM labels shall be readily visible from the **FRONT** of the receptacle. It is understood that during installation and wire pulling stages, electricians prefer to label the tops of boxes, however after final cover plates are installed, they must contain the "front visible" recognized FED FROM label as noted by this section. A sample should read: "120VAC, PP-WH2-1, BKR #12" The words "BKR" or "CKT" are meant to imply "BREAKER" or "CIRCUIT" for the purposes of LOTO isolation during service periods.

G. Phase Connection

- Each Receptacle shall be connected in accordance with standard practice established by the NEC or Nema Standards see Nominal Voltage and Phase Rotation Design Guide.

H. Overcurrent Protection

- A Single Receptacle installed on an individual branch circuit shall have an ampere rating of not less than that of the branch circuit.

I. Connected Loads

- In General, the cord and plug supplied by a receptacle shall not exceed 80% of the receptacle rating.
- For 20 AMP, 120 VOLT, convenience receptacles, the estimated load for each receptacle shall be 180 VA, therefore a maximum of 10 of this type of receptacle shall be connected on a 20 Amp branch circuit. Use Hubbell No. 5362 or equal.
- A Maximum Of six 20 or 30 Amp, 3ϕ, power receptacles shall be connected on a 20 or 30 Amp branch circuit. Use Hubbell Cat. No. 2510, 2810 or equal.
- For Welding Type Receptacles, a maximum of four shall be connected on a 50 Amp branch circuit. Welding receptacles shall be part of combination disconnect/receptacle assembly. This feature provides local shutoff for each receptacle as a safety feature when plugging/un-plugging welder extension cords. Use Crouse-Hinds Arktite Welding receptacle with enclosed safety switch (Cat # 6424). The use of isolated welding receptacles fed directly from a panelboard breaker is discouraged.

J. Special Case of Quad Receptacles:

- Where Quad-duplex receptacles are used, they shall be installed in 3-unit cast boxes (Crouse-Hinds cast device No. FD039 or equal) with stainless steel cover plates (Pass & Seymour No. 430S/S or equal).
- Quad-duplex receptacles sharing the same 3-unit cast box shall be fed from two (2) different circuit branches out of the same panelboard. This distributes load currents and offers power redundancy. Each circuit shall have its own separate neutral conductor from the panelboard. The equipment ground conductor may be shared by the two receptacles.
- Quad-duplex receptacles with associated single-gang 3-phase, volt receptacle are typically mounted 12” above floor level. 120/208
- Each Quad-Duplex Receptacle shall be marked with the identifying code of its source panel and breaker, with an engraved plastic tape 3/4" size. Red tape with white lettering shall be used for all AC voltages 250 Volts and above, while brown tape (with white lettering) shall be used for AC voltages below 250 Volts. FED FROM tapes shall indicate the full panel designation, the circuit breaker number and the voltage. Character height shall be a minimum 3/16". All FED FROM labels shall be readily visible from the **FRONT** of the receptacle. It is understood that during installation and wire pulling stages, electricians prefer to label the tops of boxes, however after final cover plates are installed, they must contain the recognized FED FROM label as noted by this section.

K. Wall Mounted Multi-Strip Receptacles:

- In lieu of surface mounted or embedded conduit raceways, manufactured multi-receptacle raceway strips are permitted which incorporate single phase or polyphase branch loads. Polyphase branches shall carry independent neutrals for each phase branch. Equipment ground conductors may be shared.
- Multi-receptacle surface-mounted receptacle strips shall be Wiremold 4000 series strips and may include isolated sections for telephone and data cables.

L. Installation Constraints:

- Where receptacle boxes in one room are branched to receptacle boxes in another room, back-to-back feed entry is prohibited since this can become a raceway for fire entry from room-to-room. A minimum interconnect nipple distance between such boxes shall be X-feet.
- Receptacles are normally spaced 12” above the floor grade, but special case elevations may vary as the needs require it.
- Taps from receptacle branches to "other" loads is prohibited. For example, it is NOT permissible to add a nearby unit heater fan to a dedicated receptacle branch circuit. The unit heater requires its own separate branch.
- Separate branch circuits to other loads shall not use the receptacle box as a feed-through point, thereby using the receptacle box as a convenience junction box.
- Convenience outlets should be located within 50 feet of equipment.

Version Number	Date	Author	Change Summary
0	11/26/2012	R. Wielgos	Initial Release
1	03/01/2015	J. Niehoff	Revise section1.3 added HPSB (ASHRAE 90.1)
2	09/01/2017	R. Wielgos	Revised for NEMA standards
3	02/19/2018	E. Huedem	Added specific ASHRAE 90.1 requirements

Basis of Design

This section applies to the design and installation of safety switches.

1.0 Scope

A. Safety switches typically used ahead of equipment.

1.1 Applicable Codes/Standards

A. International Building Code (IBC)
B. Institute of Electrical and Electronics Engineers
C. National Fire Protection Association (NFPA) Codes/Standards, but not limited to:
   a. NFPA 70, National Electrical Code

1.2 Related Sections

A. Facilities Engineering Services Section Design Guide – General

1.3 Design/Construction Documents

A. Standard construction submittal requirements

2.0 Design Criteria and Evaluation

A. General Requirements: Safety switches used in the 480/277 Volts and 208/120 Volts systems and shall be installed, ahead of the following equipment:
   - On Motor Branch Circuits when a combination starter is not used to disconnect both motors and controllers from all ungrounded supply conductors.
   - In Sight From Motors when installed outdoors or when combination starter or branch circuit protection does not have lock-open provision and is not in sight or more than 50 feet away from motor.
   - On Feeders for overhead cranes, at a readily accessible ground floor location with the enclosure painted yellow with black stripes for quick identification.
   - In Sight And In Close Proximity To Unit Heaters or duct heaters, when they are not provided with built-in disconnects.
   - In Sight And In Close Proximity To HVAC Equipment when such equipment does not have factory installed disconnects.
   - On Feeder Taps for overcurrent protection.
   - Single-Phase Unit Heaters rated for 120, or 240 volt operation may use motor-rated single-phase switches with integral motor overload protection as disconnect switches if equipped with padlock provision. Use Square-D Class 2510/2512 Type F switches with Handle Guard/Lock Off feature.

- At Equipment: A means for isolating the specific piece of equipment electrically and mechanically shall be provided so that multiple pieces of equipment do not have to be shut down to remove/replace or service a single piece of equipment.

B. Ratings: Safety switches shall be rated as follows:
- Type: Heavy duty.
  - All safety switches shall come equipped with factory installed ground kits.
  - When safety switches include neutral conductors they shall come equipped with factory installed isolated neutral kits.

C. Special Requirements: Safety switches shall be provided with the following features:
- Visible blades.
- Switches shall have quick-make and quick-break, operating handle and mechanism which shall be an integral part of the box, not the cover.
- Padlocking hole size shall accommodate at least one (1) 5/16” padlock.
- Switches shall have cover interlocking provisions to prevent unauthorized opening of the switch door in the ON position.
- Switches shall meet Federal specification W-S-865c and NEMA Standard KSl-1983.
- Switches shall be horsepower rated and UL listed, when intended to be used as disconnects for motors and controllers.
- Fused switches when used to protect specified critical electrical equipment or branch circuits, shall be provided with blown fuse indicators.
- Switches shall have a withstand rating larger than the available short-circuit current of the system.
- Switches shall be load break rated by UL.
- Safety switches shall be industrial grade sheet metal, except where corrosive or ambient conditions require a special enclosure material.
- Safety switches shall contain a legend plate to identify what load it protects/isolates and another I.D. plate to identify where it is fed from (i.e. panel and breaker number).
- Provision shall be supplied for copper neutral bar (when required) and equipment grounding lug. Mounting hardware shall not be used as a connection point for equipment ground connections.

D. Fusible Switches: In addition to the requirements listed above, fusible switch selection shall be based on the following:
- System voltage.
- Fuse ampere rating.
- Available fault current.
- UT fuse class (Class R preferred).
- Screw-in Edison base fuses are not permitted.
- Time delay fuses are acceptable (use Bussman or approved equal).
- Shall not be residential or commercial grade rated.
- Shall use required identification nameplates.

E. Manufacturer Requirements: Electrical safety disconnect switches, fusible or non-fusible versions, shall be *Square D (manufacturer),* heavy duty rated and consistent with Fermilab's standard spare parts inventory as noted below:

- Nema 1 Heavy Duty Square-D Class 3110, Catalog Number H361 or equivalent based on load amp requirements.
- Nema 3R (Rainproof) Heavy Duty Square-D Class 3110, Catalog Number H361 RB or equivalent based on load amp requirements.
- Nema 12 (Oiltight/Dustight) Heavy Duty Square-D Class 3110, Catalog Number H361 AWK or equivalent based on load amp requirements.

Version Number	Date	Author	Change Summary
0	11/26/2012	R. Wielgos	Initial Release
1	03/01/2015	J. Niehoff	Revise section 1.3

Basis of Design

This section applies to the design and installation of switch boards and panel boards.

1.0 Scope

A. Switch boards serving buildings and subsequent panel boards within a building or enclosure.

1.1 Applicable Codes/Standards

A. International Building Code (IBC)
B. Institute of Electrical and Electronics Engineers
C. National Fire Protection Association (NFPA) Codes/Standards, but not limited to:
   - NFPA 70, National Electrical Code

1.2 Related Sections

A. Facilities Engineering Services Section Design Guide – Cables and Wires
B. Facilities Engineering Services Section Design Guide – Raceway and Duct Banks

1.3 Design/Construction Documents

A. Standard construction submittal requirements
B. Standard industry quality assurance, i.e., electrical acceptance tests. Coordinate with the FESS Engineering Electrical Engineer.

2.0 Design Criteria and Evaluation

A. <u>Power Distribution Switchboards:</u>
   - <u>Switch Boards</u> are used in the 480/277 Volt system as service entrance equipment and shall be located near the point where the supply conductors from the outdoor substation enter the building or enclosure.
   - <u>In General,</u> switchboards rated 1200 Amp. and larger shall be self-supported structures of Nema Class 1 dead front construction 90" high. Most Fermilab power distribution schemes involve 5-wire systems for polyphase panelboard and switchboard installations. This includes the use of: three (3) phase conductors, one (1) neutral conductor, and one (1) ground conductor.
   - <u>Standard Main Bus Bracing</u> shall be 50,000 RMS amperes.
   - <u>Overcurrent Devices</u> installed in switchboards shall be rated no less than 125% of the continuous load they are feeding. To comply with this, an 80% derating factor must be used with all overcurrent devices such as molded case breakers unless they are tested and approved by UL for application at 100% of their rating.

- Switch Board Neutral/Ground Bus shall be provided with separated equipment ground bus and isolated neutral bus (no connection between the neutral and the ground buses at the switchboard).
- Hinged Front Trim shall be provided which allows "one person opening capability" and lockable hinged panel door for breaker access.
- Circuit Breaker Padlock capability shall be provided with factory installed permanently mounted padlock devices associated each breaker. Lockout devices shall conform to OSHA LOTO requirements.
- Breaker Labels And Directory shall be plainly marked. Breakers shall be consecutively marked with easy to read bold numbers. A corresponding breaker directory shall clearly identify the descriptive load. New panelboard breaker directories shall be typed. The directory shall clearly identify panelboard number, voltage, and “FED FROM” data (the next upstream disconnect switchboard/panelboard and branch breaker).
- Identification Label. Switchboards and panelboards shall be clearly identified by means of large easy-to-read plastic engraved nameplate. Switchboard/Panelboard designation shall use minimum 1” high characters for identity. 3/4-inch high characters shall be used to identify the VOLTAGE and 1/2” high charters for “FED FROM” data. When multiple feed sources are present (such as backfeeds or transfer switches), large RED caution plates shall be used to indicate “FED FROM MULTIPLE SOURCES” and further described in detail elsewhere in this design criteria.
- Power Monitor Features. Incoming switchboards shall provide for power monitor capability when required by ASHRAE 90.1.
- In General, lighting and distribution panelboards shall be voltage rated for the following type of services:
  - 208/120 Volts, 3ϕ, 4 Wire (in general, use NQOD nonlinear rated panelboard)
  - 480/277 Volts, 3ϕ, 4 Wire (use I-Line panelboard. Use nonlinear versions when 25% or more loads are nonlinear).
- Standard Rating of panelboards shall be nonlinear rated for use at 100 Amp., 225 Amp., 400 Amp., 600 Amp., or 800 Amp, based on conditions noted above.
- Nf Style Panelboards Prohibited. NF style panelboards, which are commercial grade panelboards, are prohibited from use at Fermilab.
- Each Lighting and appliance branch circuit panelboard shall be protected on the supply side by its main circuit breaker or if there is no main circuit breaker in the panelboard, then the overcurrent device protecting the panelboard feeder shall not have a rating greater than that of the panelboard.
- Panelboards installed in the secondary side of a transformer without secondary breaker (or fused disconnect switch) shall be provided with a main circuit breaker. This is the case of panelboards installed on secondary derived systems such as on the secondary side of 480-208/120 Volts dry-type transformers.

- All Branch Circuit Breakers installed in lighting and distribution panelboards rated 480/277 Volts, shall be plug-in type; for panelboards rated 208/120 Volts, they shall be of the bolt-on type.
- The Short Circuit Rating of a panelboard is limited to the interrupting rating of the lowest rated device that it contains. The possible fault current available at the incoming line terminals should not exceed that of the component devices. Minimum short circuit panel ratings are as follows:
  - NQOD breakers shall have minimum AC rating of 22,000A for 208/120 volt applications.
  - I-Line breakers shall have minimum AC rating of 35,000A for 480/277 volt applications.
- In 480/277 Volt Systems derived from 1500 KVA unit substations, all panelboard branch circuit breakers shall have a minimum interrupting rating of 35,000 RMS Amps symmetrical. Integrated panelboard ratings or listings shall not be used to derate breaker SCI ratings below the 35 KAIC specifications. Only “CONTINUOUS” duty ratings shall be used.
- Panelboard Neutral Bus shall be 200% nonlinear rated and isolated from ground.
- Hinged Front Trim shall be factory installed which allows "one person opening capability" and separate lockable hinged panel door for breaker access. All hinged trim shall open to the right-hand side unless specified otherwise.
- I-Line Panels shall have hinged doors over breakers.
- Plated copper bus is standard on all phase, neutral and grounding bus.
- 5-wire panel design is standard 3-phase, 4-wire with ground bar.
- Minimum NQOD panel width is 20-inches.
- Complete panel designations are to be used on all quotation submittals to Fermilab. For example, for an NQOD panel it might be: PP-LLRW-1. For an I-Line panel it might be: DHP-LLRW-1. This allows Fermilab to accurately cross-check and compare the submittals against the drawings.
- Equipment Ground Bus, all panelboards shall have a separate copper equipment ground bus. Aluminum ground busses are not permitted.
- Generator access shall be provided to any building that may require a generator. The interface shall be a dedicated quick connect style connection box located to allow generator access.

Version Number	Date	Author	Change Summary
0	11/26/2012	R. Wielgos	Initial Release
1	03/01/2015	J. Niehoff	Revise section 1.3

Basis of Design

This section applies to the design and installation of transformers.

1.0 Scope

A. This applies to the civil/conventional construction and not the accelerator "pulse" transformers or experimental detector operation transformers.

1.1 Applicable Codes/Standards

A. International Building Code (IBC)
B. Institute of Electrical and Electronics Engineers
C. National Fire Protection Association (NFPA) Codes/Standards, but not limited to:
   - NFPA 70, National Electrical Code
   - NFPA 850, Recommended Practice for Fire Protection for Electric Generating Plants and High Voltage Direct Current Converter Stations

1.2 Related Sections

A. Facilities Engineering Services Section Design Guide – Electrical General
B. Facilities Engineering Services Section Design Guide – Civil Site Work & Utilities
C. Facilities Engineering Services Section Design Guide – Facility Fire Safety

1.3 Design/Construction Documents

A. Standard construction submittal requirements
B. Standard industry quality assurance, i.e., electrical acceptance tests. Coordinate with the FESS Engineering Electrical Engineer.

2.0 Design Criteria and Evaluation

A. <u>Voltage:</u>
   - <u>High Voltage Transformers</u> (Over 600 Volts), shall be delta connected in the primary side for 13,800 Volts, 3 phase system and grounded wye connected on the secondary side for 4160 Volts or 480/277 Volts, three phase system.
   - <u>Low Voltage Transformers</u> (Under 600 Volts), shall be delta connected on the primary side for 480 Volts, three phase system and grounded wye connected on the secondary side for 208/120 Volts, three phase system.

B. <u>Liquid Filled Transformers:</u>
   - <u>Transformers</u> 500 KVA and over, shall be oil or R-Temp cooled OA/FFA depending on location.

- Oil-Filled Transformers shall be installed outdoors at least 30 feet away from buildings (edge of transformer housing to building).
- When Oil-Filled Transformers 500 KVA and over are installed less than 30 feet from building, fire-resistive walls without openings within a 30-foot radius on first story; wall above on second story (also possibly on third story, if any) should be fire resistive with necessary windows wired glass in metal sash and with combustible eaves covered with non combustible material.
- R-Temp Insulated Transformers installations may be made adjacent to buildings regardless of window opening or building construction. When installed indoors they shall be installed in a one-hour fire rated vault with sprinklers protection.
- Oil Containment Requirements shall be addressed using Fermilab's oil containment plan for the specific application. This implies using concrete retaining walls with sufficient depth and crushed stone filler to contain the spill of the largest transformer or oil-filled device. It also requires appropriate liners and an inspection drain pit.

C. Dry-Type Transformers:

- General: Transformers shall comply with NEMA Standard ST20, Dry-Type Transformers, for General Applications. All two-winding type, 3-phase units 1 coil per phase in primary and secondary. Windings shall be copper with low sound, 3 dBA or less, in accordance with IEEE Standard C57.12.91, Test Code for Dry Distribution and Power Transformers.
- Transformers 225 KVA and below except for special installations shall be dry-type, self cooled, usually designed for indoor use unless special provisions for outdoor installations are included.
- Dry-Type Transformers shall be UL listed for a 115°C temperature rise, based on a 40°C ambient.
- Dry-Type Transformers installed indoors and rated 225 KVA and below shall have a separation of at least 12 inches from combustible material unless separated by a fire-resistive heat-insulating barrier.
- Provide Vibration Isolators if they are not built into the transformer to reduce noise. To minimize transmission noise, flexible conduit shall be used for connections on the primary and secondary side. Rigid conduit connections to dry-type indoor transformers is NOT permitted.
- Enclosure Grounding:
  - Transformer Metal Enclosure shall be grounded.
- Overcurrent Protection:
  - Primary Side: Each dry-type transformer shall be protected by an individual overcurrent device in the primary connection, rated or set at no more than 125% of the rated primary current of the transformer, except that an individual overcurrent device is not required when the primary feeder overcurrent device provides the protection specified above.

- Harmonics:
  - Polyphase 4-Wire 208/120 Transformers used to provide power for general office receptacles, desktop computers, facsimile machines, copy machines, or similar electronics equipment shall require a K-4 or K-13 rating as needed for the application. A minimum 200% rated neutral conductor between transformer and distribution panel shall be used to reduce neutral overloading heating effects caused by triplen harmonics.
- Shielding:
  - Polyphase 4-Wire 208/120 Transformers used to provide power for general office receptacles, desktop computers, facsimile machines, copy machines, and experiment power electronics equipment shall be shielded.

D. Grounding: The following detail is from the National Electrical Handbook

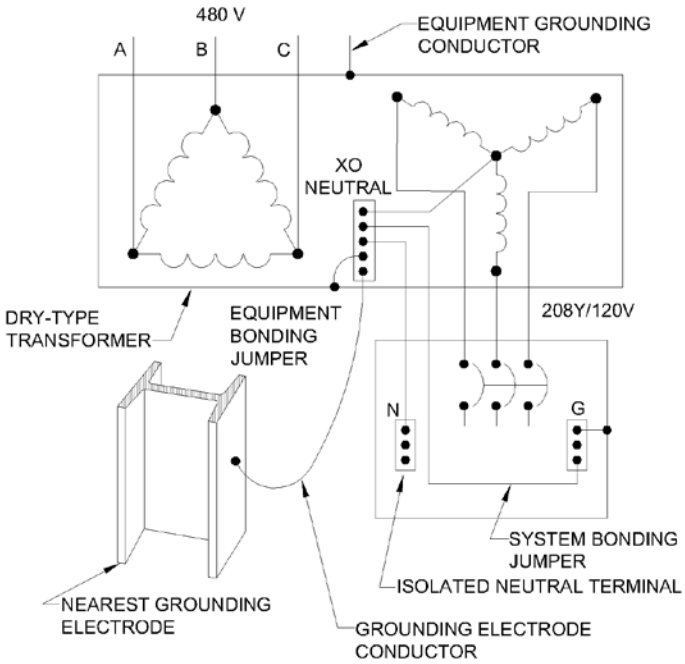

Version Number	Date	Author	Change Summary
0	11/26/2012	R. Wielgos	Initial Release
1	03/01/2015	J. Niehoff	Revise sec. 1.3 & Added General Dry Requirements & grounding detail.

Fermilab
FESHCom
Electrical Safety Subcommittee

STANDARD CONVENTIONS
for the
Fermilab Electrical AC Power Distribution System

Reviewed and Approved by the ESS
September 10, 2012

The following represents agreed upon standard conventions for the Electrical AC Power Distribution System at Fermilab. The conventions were first developed by knowledgeable representatives from FESS Engineering and Operations and the Accelerator Division. The conventions were subsequently reviewed and sanctioned by the Electrical Safety Subcommittee. It is acknowledged that these conventions are not totally inclusive of all possible aspects, equipment types, or configurations of the existing electrical distribution system. The stated standard conventions should be applied to new construction and to systems undergoing significant modification. It is not intended that older systems be modified, although partial conformance may be reasonably accommodated.

Panelboard Naming Conventions

Panelboards shall be classified solely as per operating voltage and ampacity, regardless of their position in the electrical distribution system. The acronyms for panelboards are as follows:

SWBD	Switchboard, 2000 A and Above, 480Y/277 VAC
DHP	Distribution, High Power Panelboard, 600 A to 1600 A, 480Y/277 VAC
PHP	High Power Panelboard, 100 A to 400 A, 480Y/277 VAC
LP	Lighting Panelboard, 100 A to 225 A, 480Y/277 VAC (Typically Outfitted with Single Pole Circuit Breakers)
PP	Power Panelboard, 100 A to 225 A, 208Y/120 VAC or 240/120 VAC
Exxx	Emergency, Prefix for Panelboard Capable of Being Powered by a Dedicated Emergency Power Source
Sxxx	Standby, Prefix for Panelboard Capable of Being Powered by a Dedicated Standby Power Source

Other Equipment Naming Conventions

Acronyms for other certain components of the electrical distribution system shall be as follows. Some explanations of particular categories are appended.

DSTR	Distribution Switch (Generally 13.8 kVAC)
USS	Unit Substation (Generally 13.8 kVAC to 480Y/277 VAC)
TR	Transformer, Various Ampacities and Voltages, Compads Included

ETR	Transformer, Capable of Being Powered by a Dedicated Emergency Power Source
STR	Transformer, Capable of Being Powered by a Dedicated Standby Power Source
MCC	Motor Control Center (Generally 480 VAC without Neutral)
DS	Disconnect Switch, Not Fused, Various Ampacities and Voltages
FDS	Fused Disconnect Switch, Fused, Various Ampacities and Voltages
CB	Circuit Breaker, Stand Alone, Typically External to a Panelboard in Lieu of a Panelboard Main Breaker and Also Serving as a Service Disconnect
MTS	Manual Transfer Switch, Various Ampacities and Voltages
ATS	Automatic Transfer Switch, Various Ampacities and Voltages

DSTR is an established convention for 13.8 kVAC distribution switchgear. These switches may be of the oil type, but are more often air switches such as the compartmentalized switches manufactured by S&C. They are used frequently in the 13.8 kVAC feeder distribution system of the Laboratory for purposes of equipment isolation and feeder isolation or reconfiguration.

The Unit Substation designation, **USS**, refers to compartmentalized distribution equipment that includes a 13.8 kVAC air switch, the transformer, and multiple rack-in load breakers on the secondary side. While there are numerous USSs at the Laboratory, they are not preferred for new installations.

The transformer category, **TR**, covers a wide range of equipment. A typical yard transformer would be of the "**Compad**" type now generally favored. Such a transformer would generally include an incoming line switch (for isolation only) and fuses at 13.8 kVAC and usually a single load circuit breaker. Compads are generally sized at 500, 750, or 1500 KVA. Another very common example is the 480 to 208Y/120 VAC three phase transformers typically found inside technical buildings. Transformers with other primary and secondary voltages are also covered by the "TR" identifier.

AC Voltages

Some consistency is desired in the identification of voltages present in the AC power distribution system. The following delineates acceptable or preferred practices. The specific characterization of voltage sources as wye or delta connected may be omitted if commonly understood or of minimal interest to user applications.

Acceptable:	V, VAC, Volts, Volts AC, kV, kVAC, kVolts, kVolts AC	
	208Y/120 VAC	(Three Phase)
	240/120 VAC	(Single Phase)
	480Y/277 VAC	(Three Phase)
	480 – 208Y/120 VAC	(Three Phase Transformer)
	480 – 240/120 VAC	(Single Phase Transformer)
	13.8 kVAC – 480Y/277 VAC	(Three Phase Transformer)
	13.8 kV – 480 V	(Three Phase Transformer)

Panelboard and Transformer Labeling

Panelboards and transformers of the distribution system shall be uniquely identified with labels be made from engraved plastic lamocoid material and generally 1/16 inch thick, 2.5 inches high, and a minimum 9 inches wide. The overall dimensions may be reduced for cases where the equipment cannot accommodate the standard size.

These labels generally have two lines of text. The first line would be the panelboard or transformer name (e.g. PHP-MI60A-3, TR-MI60A-3-A). The second line would describe the operating voltages or voltages present (e.g. 480Y/277 VAC, 480-208Y/120 VAC).

First line characters are to be 0.85 to 1.0 inch high with a 1/8 inch line width. Second line characters are 0.5 inches high with a 1/16 inch line width. The edges of the label are to be beveled.

RED labels with **WHITE** characters shall be used for equipment operating at 480Y/277 or 480 VAC or higher. A 480 to 208Y/120 VAC transformer would be outfitted with a label having these colors. When such equipment is capable of being powered by a dedicated Emergency or Standby power source, the equipment label shall be **ORANGE** in color with **BLACK** characters.

BLACK labels with **WHITE** characters shall be used for equipment operating at 120, 208Y/120, or 240/120 VAC. When such equipment is capable of being powered by a dedicated Emergency or Standby power source, the equipment label shall be **YELLOW** in color with **BLACK** characters.

Equipment labels are preferably attached with a high quality, double-sided adhesive tape rather than screws. For indoor applications to smooth surfaces, 3M tape 9500PC is a preferred choice. For outdoor or rougher surface applications, Normount tape V2830 is a preferred choice although the 9500PC tape is often acceptable.

Naming Conventions for "Yard" Transformers

Discussion of "yard" transformers necessarily includes Unit Substations and Compads. The names of these 13.8 kVAC primary transformers shall generally be referred to as "LOC#". LOC# is an alpha-numeric acronym that will uniquely describe the transformer location and distinguish more than one transformer at that location.

While LOC is a unique alpha-numeric acronym for the USS or Compad location, the # aspect of the LOC# identifier consists of an alpha character (A, B, C, D, E, etc.). For example: one Compad at F1 would have a LOC# identifier of F1A; one USS at the Booster East Gallery would be BEGA; and three Compads and two USSs at MI-60 would be MI60A, MI60B, MI60C, MI60D, and MI60E. Notice that there is always an appended alpha character – even if there is only one transformer or USS at the location.

The generalized labeling of yard transformers would be USS-LOC# or TR-LOC# for Unit Substations and Compads respectively. The above transformers would be marked as TR-F1A, USS-BEGA, TR-MI60A, TR-MI60B, TR-MI60C, USS-MI60D, and USS-MI60E.

Naming Conventions for Primary Panelboards

Primary panelboards are those considered to be the first panelboard to receive power from a yard transformer circuit. These panelboards shall include the transformer LOC# in their name. For the example of a Compad at F1 with a single internal load breaker power powering a DHP panelboard, the panelboard would be named DHP-F1A.

A USS typically supplies power to multiple primary panelboards in accord with the number of rack-in load breakers. Additionally, a Compad may be outfitted with or have the provision for more than one load breaker. In order to distinguish these multiple feeds as distinct sources of power, the LOC# for the primary panelboards shall have an appended number "n" (1, 2, 3, 4, etc.) relating to the specific yard load breaker. "LOC#n" now uniquely describes the source of power.

For the example of a USS at Booster East Gallery having three load breakers separately powering a SWBD, DHP, and MCC; these primary panelboards would be named SWBD-BEGA1, DHP-BEGA2, and MCC-BEGA3. For the example of a Compad at F2 with a single internal load breaker power powering a DHP panelboard and provision for a second load breaker, the primary panelboard would be named DHP-F2A1.

Naming Conventions for Sub-Primary Panelboards and Transformers

Primary panelboards feed "sub-primary" panelboards, transformers, or utilization equipment. Labeling of utilization equipment is not of concern since the connection of such equipment is documented in the panelboard schedule. The developed naming convention does not involve the physical location or pole position of the sourcing circuit breaker as has been past practice. The potential for confusion is reduced in that such locations or positions are subject to change as the distribution system is modified.

Sub-primary panelboards names are developed with a portion of the name of the upstream panelboard with an appended "-n" where n equals 1, 2, 3, 4, etc. As an example, say primary panelboard SWBD-BEGA1 feeds a DHP panelboard, and two PHP panelboards. These panelboards would be labeled as DHP-BEGA1-1, PHP-BEGA1-2, and PHP-BEGA1-3. To continue this convention for additional downstream panelboards, take as example that PHP-BEGA1-2 feeds a PHP and a LP panelboard. These panelboards would be labeled as PHP-BEGA1-2-1 and LP-BEGA1-2-2. As is the case for primary panelboards, the LOC# or LOC#n identifier is retained and continues to indicate BEGA1 as the single primary source of power.

While sub-primary panelboards are identified with an appended numeric character, transformers shall be identified with an alpha character. Consider primary panelboard DHP-BEGA1-1 feeding three 480 - 208Y/120 VAC transformers. Here the transformers would be named as TR-DHP-BEGA1-1-A, TR-DHP-BEGA1-1-B, and TR-DHP-BEGA1-1-C. A benefit of this convention is that the "DHP-BEGA1-1" part of the transformer's name is a direct indicator of the transformer's fed-from source.

Continuing the above example, assume the first two transformers each feed a single PP panelboard, and the third feeds two PP panelboards. These 208Y/120 VAC panelboards would be named PP-BEGA1-1-A1, PP-BEGA1-1-B1, PP-BEGA1-1-C1, and PP-BEGA1-1-C2. Additional panelboards are readily accommodated without modification of the names of existing equipment.

Naming Conventions for Disconnect and Transfer Switches

Disconnect and Transfer Switches, including **DS**, **FDS**, **MTS** and **ATS** types, are sometimes named. Such switches that provide isolation between elements of the AC Power Distribution System must be named. If named, the switch shall be appended with the name of the downstream piece of equipment that it serves to isolate. **DS-PP-MI65A-A1** is an example of a disconnect switch that isolates all three ungrounded phases powering panelboard PP-MI65A-A1. Where the switch position is remote from connected and downstream equipment, it should be named. If the downstream connection for a switch is not apparent or if there is more than one switch at a particular physical location, all such switches must be named.

All such switches shall be identified as to the nominal operating voltage of interior circuits.

Naming Conventions for Wall Receptacles

Receptacles are typically labeled with the name of the breaker panel immediately upstream followed by the circuit number. PP-CL-14E-2 CKT 15 is an example of a receptacle fed from panel PP-CL-14E-2 and coming off of the circuit breaker labeled 15.

Panelboard Schedules

At a minimum, panelboard schedules shall list and be in accord with the following:

- Panelboard name. (e.g. PP-BEGA1-1-B1)
- Normal operating current (e.g. Trip Current of Upstream Overcurrent Protection Device as opposed to the ampacity rating of the panelboard)
- Operating voltages and number of phases. (e.g. 208Y/120 VAC, 3 Phase)
- Fed-From source of power. (e.g. TR-DHP-BEGA1-1-B and DHP-BEGA1-1 CB#27)
- Load descriptions and corresponding circuit breaker positions
- Load descriptions shall be specific rather than general if at all possible (e.g. Lighting – Room 101 vs. Lighting)
- Legible
- Current

It is strongly suggested that panelboard schedules be generated in a computer word processor or spreadsheet format to facilitate ease of modification and lockout/tagout performance. It is advised to provide a second copy of the schedule at the panelboard. In addition to the above, the following information might be included in the electronic file. Some of the below may be added to the displayed panel schedule as appropriate.

- Panelboard Rated Ampacity
- A listing of all available circuit breaker positions. Non-occupied positions shall be designated as “Blank” or “Space”. Unused breakers shall be designated as “Spare”.
- The overcurrent rating of the circuit breaker
- The phase of power for the particular circuit breaker position
- The physical location of the panelboard
- The type of panelboard (e.g. Square D I-Line, Square D NQOD)

- Whether or not there is a Panel Main Breaker. If present, show the ampacity of the Panel Main breaker.
- The kVA rating of the upstream powering transformer, if the panelboard is directly fed by the transformer
- The FESS bar code inventory number
- The wire size of the feed conductors for the ungrounded, grounded, and grounding conductors
- The size, type and quantity of the conduits containing the feed conductors
- Type of Circuit Breaker
- Instantaneous Current Trip Setting (In Amps or Set Point Position)
- Minimum recommended Circuit Breaker AIC
- Date of Issue
- Who to notify if the schedule needs updating. Generally this is the Division/Section Electrical Coordinator.
- Special notes pertinent to the panelboard. One should include here the specific location of the fed-from source if not obvious.

Circuit Breaker Position Labeling

Panelboard circuit breaker positions shall be numbered in accord with provided electrical drawings. Generally, left side breakers are labeled with odd numbers 1 – 3 – 5 - …etc. top to bottom while the right side breakers are generally labeled with even numbers 2 – 4 – 6 - …etc. top to bottom. Positions are typically marked with self-adhesive numbers provided by panelboard manufacturers.

Numbers shall be neatly applied to the panelboard front mat adjacent to each breaker pole position. Three pole breakers need only be labeled at the center pole position. Circuit breaker position numbers shall <u>not</u> be applied to the physical circuit breaker.

A second set of numbers may be installed interior to the panelboard in direct correspondence to the mat numbers to facilitate branch circuit identification during panelboard access.

Color Coding of Conductors

Color Coding shall be utilized to distinguish the conductors of the power distribution system. The requirements are fully explained in the Technical Appendix of FESHM Chapter 5042. Briefly stated, the requirements for the prevalent three phase distribution systems are as follows:

For conductors in <u>all</u> systems, <u>except</u> those in a 480Y/277 VAC system, the color code for ungrounded conductors corresponding to Phase A-B-C shall be **Black-Red-Blu**e (BRB). The grounded or neutral conductor shall be coded **White**.

For conductors in a 480Y/277 VAC system, the color code for ungrounded conductors corresponding to Phase A-B-C shall be **Brown-Orange-Yellow** (BOY). The grounded or neutral conductor shall be coded **Gray**.

Grounding conductors shall be color coded with **Green**, with or without Yellow stripe, or bare.

Miscellaneous

Fed-From Labeling, though included in the panelboard schedule or the transformer name, may be additionally displayed on the front face of the equipment. In that this information is subject to change as the AC Power Distribution System is modified, this labeling should be semi-permanent in nature.

Equipment having **Multiple Energy Sources** must be clearly identified as such. Panelboards or transformers that are capable of being powered by dedicated Emergency or Standby power source need <u>not</u> be so identified when properly labeled with the E or S prefix and an orange or yellow lamocoid with black lettering.

Basis of Design

Sustainable design seeks to reduce negative impacts on the environment, and the health and comfort of building occupants, thereby improving building performance. The basic objectives of sustainability are to reduce consumption of non-renewable resources, minimize waste, and create healthy, productive environments.

1.0 Background. Fermilab is committed to environmental stewardship and promotes implementation of sustainable design concepts. Many of these concepts have been incorporated directly into the various sections of Fermilab's Facilities Engineering Services Design Guide.

1.1 Sustainability Requirement. In accordance with DOE Order 436.1, *Departmental Sustainability*, all Department of Energy facilities shall comply with sustainability targets as contained in Executive Order 13693, *Planning for Federal Sustainability in the Next Decade* and as tracked though the Fermilab Site Sustainability Plan (SSP) reports. The targets related to this design guide are as follows;

A. All new building construction and modernization above 5,000 gross square feet shall comply with the latest Guiding Principles for Federal Leadership in High Performance and Sustainable Buildings (Guiding Principles, GP or HPSB) for new Construction or Modernization. (New building construction and modernization under 5,000 gross square feet shall incorporate as many of the Guiding Principles as possible, and as required by the project team);

B. Beginning in fiscal year 2020 and thereafter, all new construction of Federal buildings greater than 5,000 gross square feet that enters the planning process (Project Definition Report), shall be designed to achieve energy net-zero and, where feasible, water or waste net-zero;

1.2 References:

A. Net-Zero definitions:
https://energy.gov/sites/prod/files/2015/09/f26/bto_common_definition_zero_energy_buildings_093015.pdf

B. FESS/Eng HPSB Procedure 5.3.5.1

C. Life Cycle Costing. OMB Circulars A-94 and A-11 Part 7 *Capital Programming Guide*.
https://obamawhitehouse.archives.gov/omb/circulars_a094/a94_appx-c
https://georgewbush-whitehouse.archives.gov/omb/circulars/a11/current_year/part7.pdf

D. ASHRAE AEDG (Advanced Energy Design Guide)

E. ASHRAE 90.1 (Energy Standard for Buildings Except Low-Rise Residential Buildings)

F. A Common Definition for Zero Energy Buildings, September 2015
https://energy.gov/sites/prod/files/2015/09/f26/bto_common_definition_zero_energy_buildings_093015.pdf

G. Guiding Principles for Sustainable Federal Buildings and Associated Instructions:
https://www.sustainability.gov/pdfs/guiding_principles_for_sustainable_federal_buildings_associated_instructions.pdf

H. DOE Guiding Principles for Sustainable Federal Buuildings:
https://energy.gov/eere/femp/guiding-principles-sustainable-federal-buildings

1.3 Abbreviations and Definitions

A. Zero Energy Building is defined by DOE as An energy-efficient building where, on a source energy basis, the actual annual delivered energy is less than or equal to the on-site renewable exported energy.
B. Site Energy refers to the number of units of energy consumed on the site and typically metered at the property line or the utility meter.
C. Source Energy refers to the total amount of energy required to produce and transmit a given amount of energy of each fuel type to the site.
D. EUI (Energy Use Intensity) is the building's annual energy use per unit area, measured in thousands of BTU per square foot per year.
E. Modernization is defined as a comprehensive replacement or restoration of virtually all major systems, interior work (such as ceilings, partitions, doors, floor finishes, etc), and building elements and features.
F. CxA (Commissioning Agent)
G. M&V (Measurement and Verification)
H. BOD (Basis of Design)
I. NZB (Net Zero Building)
J. OPR (Owner's Project Requirements)
K. HPSB (High Performance and Sustainable Building)
L. GP (Guiding Principle or referring to HPSB)
M. ASHRAE (American Society of Heating, Refrigeration, and Airconditioning Engineers)

1.4 Six Guiding Principles (HPSB)

A. Employ integrated Design;
B. Optimize Energy Performance;
C. Protect and Conserve Water;
D. Enhance indoor environmental quality
E. Reduce environmental impact of materials;
F. Assess and consider climate change risks;

7.0 Design Approach

	HPSB	NZB
CONCEPTUAL DESIGN PHASE / PROJECT DEFINITION REPORT PHASE		
Follow FESS/E procedure 5.3.5.1.	X	X
start HPSB checklist	X	X
Develop OPR or functional requirement and project expectations	X	X
Check on-site renewable energy potential.		X
Set an energy performance target	X	X
Compare the energy target with onsite renewable potential.		X
Establish a tight but achievable infiltration goal (air leakage rate) given the anticipated construction.		X
Optimize building siting and orientation.	X	X
Minimize surface area to volume ratio, and building shape.	X	X
Optimize window-to-wall ratio for the building.	X	X
Optimize the impact of building shading.	X	X
plan for PV array location or other renewable energy system to ensure adequate space is reserved for it		X
PRE DESIGN PHASE		
Do early energy modeling.	X	X
Perform daylighting analysis or iterative modeling to determine optimum daylight fenestration area.		X
Engage CxA to contribute their technical expertise to the OPR development.		X
Hire Architect/Engineers (for design phase) with expertise on NZB design.		X
DESIGN PHASE		
Develop / document BOD	X	X
Follow ASHRAE 90.1 mandatory requirement.	X	X
Provide continuous air barrier leakage control	X	X
Avoid thermal bridging	X	X
Focus on reducing building loads	X	X
Provide better details on envelopes.		X
Include whole building air leakage testing/ door blower test.		X
Consider assembly testing on envelope components.		X
Perform building system commissioning (HVAC, lighting, controls)	X	X
Perform commissioning of building enclosure		X
POST CONSTRUCTION		
Perform M&V		X
Plan for post occupancy task such as ongoing commissioning, or monitoring-based commissioning.	X	X
Engage CxA for measurement and verification stage of the project.		X
Include design team and energy modeler for the M&V process.		X
Review energy performance of the project 12 to 24 months after substantial completion.	X	X
input air leakage test to the as-built energy model for an accurate understanding of the building loads		X
Calibrate energy model to the actual data to confirm performance. / (asbuilt model)		X

Version Number	Date	Author	Change Summary
0	11/26/2012	R. Walton	Initial Release
1	01/30/2016	J. Niehoff	Updated Links
2	03/21/2018	E. Huedem	General Update including NZB

Fermi National Accelerator Laboratory
Design Position Accessibility Requirements

This position paper applies to the accessibility requirements of the State of Illinois and the Federal accessibility requirements (ADA). These areas in question are the underground beam-line enclosures, the experimental halls, experimental laboratories, and support/service buildings at Fermi National Accelerator Laboratory (Fermilab). In addition, these areas have potential hazardous environments, such as radiological, oxygen depleting atmosphere, high voltage, and flammable gases. These areas are unique restricted and potential hazardous operations and therefore, will not be designed to accessibility requirements. The identified unrestricted occupied areas of the laboratory facilities will however, be designed to accessibility requirements. Fermilab's Facilities Engineering Services Section (FESS) and/or Environmental, Safety, Health & Quality (ESH&Q) will identify the restricted and unrestricted areas in the conceptual design phase.

The question is whether the facilities itself are exempted to accessibility requirements. The issue is providing confirmation that the specific areas are exempted from state accessibility requirements, and from federal accessibility requirements.

Americans with Disabilities Act, 2010 Standards

Fermilab's position that the areas in question are exempt from compliance with the 2010 ADA, as it is a machinery space, frequented only by service personnel for maintenance, repair and occasional monitoring of equipment. Because of the importance of, and the hazardous nature of the areas, access to it is highly restricted and controlled by electric security locks. Access is carefully controlled, scheduled and monitored. It is not possible for someone to inadvertently enter these areas. In addition, because of the nature of these areas, access to it is rare. During normal operations of the beam-line enclosure and support/service buildings, it is not visited by authorized employees for periods in excess of several weeks.

Fermilab's interpretation of the facilities as a machinery space is consistent with Section 203 of the 2010 ADA, which states:

> ***203 General Exceptions:***
>
> ***203.1 General.*** *Sites, buildings, facilities and elements are exempt from these requirements to the extent specified by 203.*
>
> ***203.4 Limited Access Spaces.*** *Spaces accessed only by ladders, catwalks, crawl spaces, or very narrow passageways shall not be required to comply with these requirements or to be on an accessible route.*
>
> ***203.5 Machinery Spaces.*** *Spaces frequented only by service personnel for maintenance, repair, or occasional monitoring of equipment shall not be required to comply with these requirements or to be on an accessible route. Machinery spaces include, but are not limited to, elevator pits or elevator penthouses; mechanical, electrical or communications equipment rooms; piping or*

equipment catwalks; water or sewage treatment pump rooms and stations; electric substations and transformer vaults; and highway and tunnel utility facilities.

1997 Illinois Accessibility Code (IAC)

The Area is not a Work Area: Fermilab's postion of the areas in question are also exempted from compliance with the 1997 Illinois Accessibility Code (IAC). These areas are not an "*employee work area*". There is no work performed by employees within this area; and as noted above, employees do not even have access to this area; except for a few specialized staff members who on rare occasions are involved in maintenance, repair, or occasional monitoring of the equipment within these areas.

The Areas are Un-occupiable: These areas are non-occupiable, as defined by the IAC, which defines "*Occupiable"* as *"a room or enclosed space designed for human occupancy in which individuals congregate for amusement, educational, or similar purposes, or in which occupants are engaged at labor, and that is equipped with means of egress, light, and ventilation".* The areas in question are not designed, intended or provided for the occupants to congregate for any purpose; and it is not designed for occupants of the facilities to be engaged in continuous labor within these areas.

The elevator service to the beam-line enclosures and experimental halls are restricted, and is provided solely for the purpose of occasionally moving supplies or materials needed for the purpose of maintenance, repair, or occasional monitoring of the equipment within this area.

The Area is a Hazardous Area: It is, as defined by the IAC (Section 400.210 "Code Terms"), a "*Hazardous Area": A space or an area which may be dangerous, or cause injury, to a person who accidentally enters into such space or area. Examples include, but are not limited to: loading docks; boiler or heater rooms; power and generation facilities; electrical and telephone equipment spaces; elevator equipment rooms and pits; tanks, lagoons, storage and processing facilities located at/above/below ground level; highly technical facilities or mechanical, electrical or chemical storage and/or processing facilities; and pump facilities; and spaces with complex mechanical components of multi-level construction".*

1991 ADAAG, 1997 IAC and 2010 ADA: The IAC was written in 1997 based on the 1991 Americans with Disabilities Act Architectural Guidelines (ADAAG). As the IAC notes in the "Guide to the Use of the Code" (page viii), the language within the IAC is exactly the same as the ADAAG, except as noted in italics in the IAC. The IAC also cites the applicable ADAAG sections at the end of each IAC section. The sections on "General Exceptions" of the IAC and in ADAAG subsection 4.1.1 (5)(b) are identical, and read as follows:

> ***General Exceptions***
> *Accessibility is not required for:*
>
> > *1) observation galleries used primarily for security purposes; or*
> > *2) non-occupiable spaces accessed only by ladders, catwalks, crawl spaces, very narrow passageways, or freight (non-passenger) elevators, and frequented only by service personnel for repair purposes; such spaces include, but are not limited to, elevator pits, elevator penthouses, piping, or equipment catwalks.*

The 2010 ADA clarified the intent of the 1991 ADAAG, and in many areas, became more restrictive by extending areas which required compliance. Clarifications included subsections 203.4 "Limited Access Spaces" and 203.5 "Machinery Spaces". These two subsections contain some of the language that previously existed in ADDAG 4.1.1(5)(b), but have been expanded to confirm areas of exception or exemption.

IAC Interpretations: Should there be any questions about the intent of the IAC, it is requested that the appropriate parties contact the following:

Mr. Douglas Gamble
Capital Development Board
3rd Floor, William G. Stratton Building
401 South Spring Street
Springfield, Illinois 62706
Phone Number: (217) 782-8530
Fax Number: (217) 524-4208
Email Address: doug.gamble@illinois.gov