Quench Protection of SSR-2 Focusing Lens:

Resistors Connected to All Coils of the Lens

E. Khabiboulline & I. Terechkine

1. Introduction

Previously completed work [1] has determined a suitable configuration for quench protection that utilizes dump resistors connected in parallel to two coils in the four-coil SSR2 system. This note investigates quench protection of the same system through the use of the recently developed general approach in which dump resistors are connected in parallel to every coil [2]. The circuit representing the system is shown below.

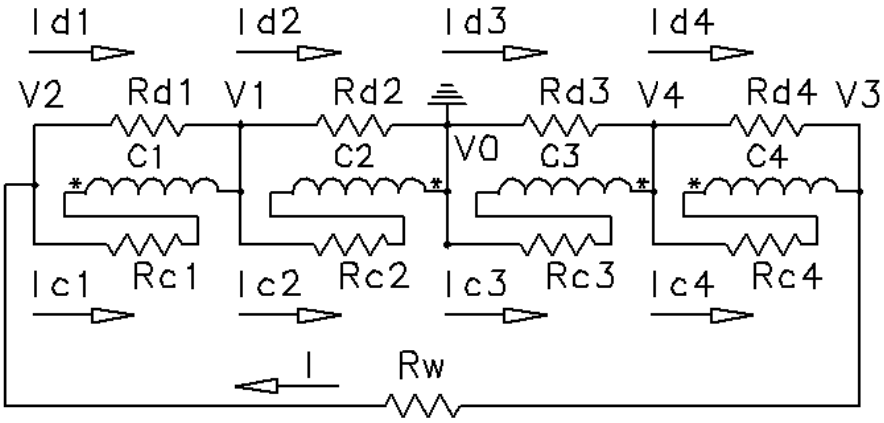

Fig. 1: Current discharge circuit in the case when a quench happens in every coil and each coil is equipped with a dump resistor.

In Fig.1, C1 and C4 represent bucking coils (BC), while C2 and C3 correspond to the two halves of the main coil (MC) of the lens. Rc1 to Rc4 are the resistances of a quenching coils (every one and all coils are allowed to quench), and Rd1 to Rd4 are the dump resistors connected in parallel to the coils. Rw represents additional resistance in the system that may come from normally conducting leads or other elements of the circuit. In this analysis, Rw = 0 was accepted, although the code allows setting this value as high as needed.

Since the location of the quench cannot be predicted, and the system of coils is symmetrical, the dump resistors connected in parallel to the two bucking coils must have equal resistances: Rd1 = Rd4. A similar condition must be applied to the resistors connected in parallel to the two main coils: Rd2 = Rd3.

The quench propagation modeling program used in this study is an improved version of the code used in [1], with changes made to produce more accurate results. The program now allows for the possibility of multiple quenching coils, although only a single initial quench is analyzed here. Additional unintentional quenching can occur when the current density in a part of the system becomes greater than the critical current density; no such situation was observed in this study with the given initial current, although this option was tested and it sure works.

2. Study Results

The results of the study are presented in several tables. The left side of each table corresponds to the case of a quenching bucking coil (BC), while the right side deals with the case of a quenching main coil (MC). When generating the results in this section, the initial current in the discharge circuit I0 = 249 A was accepted, and the computational time step of 10^{-4} s was chosen. In each table, values chosen to demonstrate the quench cases (resistance of a quenching coil, maximum temperature, voltages in the circuit, maximum current, energy deposition rate, and absorbed energy) are shown as functions of the dump resistances Rd1 (BC) (rows) and Rd2 (MC) (columns).

Table 1 shows the maximum resistance developed in quenching coils.

Table 1. Resistance developed in quenching coils

Variable	Quench in C1 (Bucking Coil)						Quench in C2 (Main Coil)					
Maximum Rc (Ohms)	Rd (Ohms)	MC 1	3	5	7	10	Rd (Ohms)	MC 1	3	5	7	10
	1	4.13	4.54	4.64	4.69	4.72	1	2.24	2.60	2.74	2.82	2.89
	3	5.19	6.15	6.43	6.57	6.68	3	2.24	2.60	2.74	2.82	2.89
	BC 5	5.53	6.79	7.21	7.42	7.59	BC 5	2.24	2.60	2.74	2.82	2.89
	7	5.70	7.16	7.67	7.93	8.15	7	2.24	2.60	2.74	2.82	2.89
	10	5.84	7.48	8.09	8.42	8.70	10	2.24	2.60	2.74	2.82	2.89

In the case of quenching bucking coil, both Rd1 and Rd2 affect the coil heating, while in the case of quenching main coil, the coil resistance changes only when Rd2 changes. This is because in the SS2 lens the bucking coil is weakly coupled to the main coil and the energy stored in its field is relatively small. The change in the quenching coil resistance projects directly into the maximum temperature of the quenching coil, which is shown in Table 2.

Table 2. Maximum temperature in quenching coil.

Variable	Quench in C1 (Bucking Coil)						Quench in C2 (Main Coil)					
Maximum Temperature (K)	Rd (Ohms)	MC 1	3	5	7	10	Rd (Ohms)	MC 1	3	5	7	10
	1	138.94	148.60	150.98	152.05	152.88	1	77.57	82.88	84.98	86.12	87.09
	3	164.15	189.28	196.93	200.65	203.67	3	77.58	82.89	84.98	86.12	87.10
	BC 5	172.97	206.89	218.36	224.20	229.06	BC 5	77.59	82.89	84.99	86.13	87.10
	7	177.50	216.97	231.21	238.71	245.04	7	77.59	82.90	84.99	86.13	87.10
	10	181.26	226.06	243.27	252.59	260.66	10	77.59	82.90	84.99	86.13	87.10

We see that within the chosen range of shunt resistances, the temperature in both coils (and, especially, that of the bucking coil) does not exceed the allowed 300 K margin.

The next set of data shows how the maximum (extreme) voltages relative to the ground (Table 3) and across the coils (Table 4) observed in the circuit during the quench cycle change with values of the dump resistors. Following these tables, in Table 5, the maximum currents observed in the dump resistors during quenching are shown.

Table 3. Voltages relative to the ground in the circuit in Fig. 1

Variable	Quench in C1 (Bucking Coil)					Quench in C2 (Main Coil)				
	Rd (Ohms) \ MC	1	3	5	7	10	1	3	5	7	10
V1	1	-53.60	-65.55	-69.92	-72.32	-74.21	70.45	117.93	136.82	146.82	155.18
	3	-89.26	-127.96	-141.63	-149.04	-155.49	70.66	118.00	136.87	147.08	155.4
	BC 5	-103.20	-160.52	-182.43	-194.74	-205.74	70.67	118.03	137.11	147.13	155.44
	7	-110.65	-180.77	-210.01	-226.42	-241.13	70.68	118.05	136.92	147.14	155.45
	10	-116.65	-200.15	-237.01	-258.18	-277.34	70.68	118.06	136.94	147.16	155.46
V2	1	69.30	80.84	85.41	87.42	87.97	69.67	115.93	134.39	144.20	152.27
	3	105.54	140.42	154.44	160.71	165.48	69.21	115.53	134.14	144.16	152.26
	BC 5	121.04	172.37	195.37	207.57	217.53	69.27	115.71	134.31	144.16	152.27
	7	128.68	190.94	222.26	239.32	253.23	69.20	115.70	134.12	144.16	152.27
	10	132.42	209.12	248.93	270.95	290.44	69.24	115.69	134.12	144.16	152.27
V4	1	58.77	75.08	80.01	82.45	84.70	67.12	112.82	131.05	140.71	148.79
	3	92.25	135.63	150.15	157.02	161.87	67.41	113.05	131.19	140.94	148.98
	BC 5	105.42	165.96	190.54	202.47	211.99	67.38	113.12	131.39	141.00	149.02
	7	112.32	186.25	216.6	233.07	246.67	67.48	113.14	131.28	141.02	149.04
	10	118.01	204.35	242.15	263.37	283.14	67.41	113.16	131.30	141.04	149.06

Higher values of dump resistors can result in unacceptable voltage, that exceeds specified 250 V maximum (500 V in air and 300 V in helium are acceptance levels during the high-pot test.)

Table 4. Voltages across the coils in the circuit in Fig. 1

Variable	Quench in C1 (Bucking Coil)					Quench in C2 (Main Coil)				
	Rd (Ohms) \ MC	1	3	5	7	10	1	3	5	7	10
Voltage Across BC1 (V2-V1)	1	115.41	139.21	145.66	148.66	151.04	-2.70	-3.79	-4.13	-4.31	-4.47
	3	185.14	265.27	292.95	306.45	317.91	-2.72	-3.85	-4.21	-4.41	-4.56
	BC 5	211.95	328.2	375.80	399.96	420.51	-2.73	-3.87	-4.23	-4.42	-4.57
	7	226.50	370.16	429.52	462.09	490.37	-2.73	-3.87	-4.23	-4.42	-4.58
	10	238.46	407.43	481.99	524.23	562.74	-2.73	-3.88	-4.24	-4.42	-4.58
Voltage Across MC1 (V1-V0)	1	-54.02	-66.07	-70.48	-72.90	-74.80	69.82	117.00	135.74	145.65	153.96
	3	-89.99	-129.00	-142.78	-150.24	-156.75	70.10	117.09	135.81	145.91	154.18
	BC 5	-104.05	-161.83	-183.93	-196.34	-207.43	70.08	117.13	136.02	145.95	154.22
	7	-111.55	-182.26	-211.73	-228.28	-243.11	70.11	117.14	135.87	145.97	154.23
	10	-117.63	-201.80	-238.96	-260.30	-279.61	70.09	117.16	135.88	145.98	154.24
Voltage Across MC2 (V0-V4)	1	-59.28	-75.73	-80.71	-83.17	-85.43	-67.68	-113.75	-132.14	-141.88	-150.02
	3	-93.02	-136.77	-151.40	-158.33	-163.22	-67.97	-113.99	-132.28	-142.11	-150.21
	BC 5	-106.30	-167.33	-192.12	-204.15	-213.75	-67.94	-114.05	-132.48	-142.16	-150.26
	7	-113.25	-187.80	-218.40	-235.02	-248.73	-68.03	-114.08	-132.37	-142.19	-150.28
	10	-119.01	-206.05	-244.16	-265.57	-285.50	-67.97	-114.10	-132.39	-142.21	-150.29
Voltage Across BC2 (V4-V3)	1	-23.31	-12.31	-8.96	-6.79	-5.90	-9.62	-7.70	-6.59	-6.01	-5.48
	3	-51.14	-28.10	-18.97	-14.87	-11.65	-9.96	-8.10	-6.89	-6.19	-5.61
	BC 5	-60.55	-34.53	-24.96	-19.87	-15.60	-10.11	-8.11	-6.95	-6.24	-5.62
	7	-66.52	-36.98	-28.09	-22.71	-17.83	-10.18	-8.14	-6.97	-6.25	-5.62
	10	-72.77	-40.21	-31.34	-25.41	-20.33	-10.17	-8.15	-6.98	-6.26	-5.62

Table 5. Maximum currents in the dump resistors

Variable	Quench in C1 (Bucking Coil)					Quench in C2 (Main Coil)				
	Rd (Ohms) \ MC	1	3	5	7	10	1	3	5	7	10
Current in Rd1	1	115.41	139.21	145.66	148.66	151.04	-2.70	-3.79	-4.13	-4.31	-4.47
	3	61.71	88.42	97.65	102.15	105.97	-0.91	-1.28	-1.40	-1.47	-1.52
	BC 5	42.39	65.64	75.16	79.99	84.10	-0.55	-0.77	-0.85	-0.88	-0.91
	7	32.36	52.88	61.36	66.01	70.05	-0.39	-0.55	-0.60	-0.63	-0.65
	10	23.85	40.74	48.20	52.42	56.27	-0.27	-0.39	-0.42	-0.44	-0.46
Current in Rd2	1	-54.02	-22.02	-14.10	-10.41	-7.48	69.82	39.00	27.15	20.81	15.40
	3	-89.99	-43.00	-28.56	-21.46	-15.68	70.10	39.03	27.16	20.84	15.42
	BC 5	-104.05	-53.94	-36.79	-28.05	-20.74	70.08	39.04	27.20	20.85	15.42
	7	-111.55	-60.75	-42.35	-32.61	-24.31	70.11	39.05	27.17	20.85	15.42
	10	-117.63	-67.27	-47.79	-37.19	-27.96	70.09	39.05	27.18	20.85	15.42
Current in Rd3	1	-59.28	-25.24	-16.14	-11.88	-8.54	-67.68	-37.92	-26.43	-20.27	-15.00
	3	-93.02	-45.59	-30.28	-22.62	-16.32	-67.97	-38.00	-26.46	-20.30	-15.02
	BC 5	-106.30	-55.78	-38.42	-29.16	-21.38	-67.94	-38.02	-26.50	-20.31	-15.03
	7	-113.25	-62.60	-43.68	-33.57	-24.87	-68.03	-38.03	-26.47	-20.31	-15.03
	10	-119.01	-68.68	-48.83	-37.94	-28.55	-67.97	-38.03	-26.48	-20.32	-15.03
Current in Rd4	1	-23.31	-12.31	-8.96	-6.79	-5.90	-9.62	-7.70	-6.59	-6.01	-5.48
	3	-17.05	-9.37	-6.32	-4.96	-3.88	-3.32	-2.70	-2.30	-2.06	-1.87
	BC 5	-12.11	-6.91	-4.99	-3.97	-3.12	-2.02	-1.62	-1.39	-1.25	-1.12
	7	-9.50	-5.28	-4.01	-3.24	-2.55	-1.45	-1.16	-1.00	-0.89	-0.80
	10	-7.28	-4.02	-3.13	-2.54	-2.03	-1.02	-0.82	-0.70	-0.63	-0.56

As we see from the first sub-table in Table 4, in order to have the voltage across the coils below 250 V, the values of the dump resistances parallel to the bucking coils or/and the main coil must be sufficiently small.

It is important to know the maximum current in the dump resistors in order to limit heat flux to the cold mass of the lens when the location of the resistors is chosen at the LN2 temperature or outside the cryostat. As we see in the Table 5, if quench happens in the main coil, with Rd2 = Rd3 = 1 Ohm, the maximum current in both halves of the coil is ~70 A and almost does not depend on the value of the dump resistor parallel to the bucking coil (Rd1 and Rd4). In the resistors connected in parallel to the bucking coils, the current is very small. If the bucking coil is quenching, currents can be quite high in any dump resistor. Increase of Rd1 (and Rd4), while helping to reduce the current in this circuit, results in significant current increase in Rd2 and Rd3. Increase of Rd2 (and Rd4) results in the corresponding increase of the current in Rd1. If one chooses to have maximum currents in each of the dump resistances close to each other, Rd2 and Rd3 can be chosen having low resistances (e.g. 1 Ohm) and the values of Rd1 and Rd4 can be chosen a bit higher (e.g. Rd1 = Rd4 = 2.5 Ohm). With this choice, the maximum current in all the resistances will not exceed ~80 A.

The choice of the dump resistors must be made based on the maximum current, power, and dissipated energy. Table 6 shows maximum power in the dump resistors, and Table 7 provides values of dissipated energy during quenching.

When the main coil quenches, the energy deposition rate does not exceed 5 kW in Rd2 and Rd3; when the bucking coil BC1 quenches, the power in Rd1, Rd2, and Rd3 can be much higher. Lower resistance values of Rd2 (and Rd3) help to reduce the power in Rd1. Increasing the resistance value of Rd1, we are decreasing the power in this resistor while increasing the power in Rd2 and Rd3. Optimal choice (with about equal power deposition rate for all resistors) is reached when Rd2 = Rd3 = 1 Ohm and Rd1 = 3 Ohm or a bit higher. In this case, the maximum power in any resistor will not exceed ~10 kW.

In the chosen range of the resistances, when quench happens in the main coil, the energy deposition in Rd2 and Rd3 does not exceed 2 kJ. In the case when quench occurs in the bucking coil, more energy is dissipated in Rd1 when this resistance is low. On the other hand, increasing resistances of Rd1 and Rd4 from this low level results in the increase of energy dumped into Rd2 and Rd3. The maximum removed energy with Rd2 = Rd3 = 1 Ohm happens around Rd1 = Rd4 = 3 Ohm, and quite weakly depends on the resistance value of these resistors.

With Rd1 = Rd4 = 3 Ohm, increase of Rd2 and Rd3 results in lower removed energy. So, having Rd1 = 3 Ohm and Rd2 = 1 Ohm results in the most efficient energy removal from quenching bucking coil.

Table 6. Maximum power in the dump resistors during quenching

Variable	Quench in C1 (Bucking Coil)					Quench in C2 (Main Coil)				
	Rd (Ohms) \ MC	1	3	5	7	10	1	3	5	7	10
Maximum Power in Rd1 (kW)	1	13.52	19.52	21.37	22.31	22.97	0.0021	0.009	0.010	0.011	0.011
	3	11.57	23.68	28.86	31.60	34.00	0.008	0.003	0.003	0.0037	0.0038
	BC 5	9.13	21.74	28.48	32.26	35.65	0.005	0.002	0.002	0.0022	0.0023
	7	7.44	19.74	26.56	30.74	34.61	0.0033	0.0013	0.0015	0.002	0.0016
	10	5.74	16.73	23.40	27.69	31.98	0.002	0.00093	0.0011	0.0011	0.001
Maximum Power in Rd2 (kW)	1	2.87	1.43	0.978	0.747	0.55	4.96	4.64	3.74	3.08	2.41
	3	7.97	5.46	4.01	3.17	2.42	4.99	4.64	3.75	3.09	2.42
	BC 5	10.65	8.59	6.66	5.42	4.23	4.99	4.64	3.76	3.09	2.42
	7	12.24	10.89	8.82	7.32	5.81	5.00	4.65	3.75	3.09	2.42
	10	13.61	13.35	11.24	9.52	7.69	5.00	4.65	3.75	3.09	2.42
Maximum Power in Rd3 (kW)	1	3.45	1.88	1.28	0.971	0.72	4.51	4.24	3.44	2.83	2.21
	3	8.51	6.13	4.51	3.52	2.62	4.54	4.26	3.44	2.84	2.22
	BC 5	11.11	9.18	7.26	5.86	4.49	4.54	4.27	3.45	2.84	2.22
	7	12.62	11.56	9.38	7.76	6.08	4.55	4.27	3.45	2.84	2.22
	10	13.93	13.92	11.73	9.91	8.02	4.54	4.27	3.45	2.84	2.22
Maximum Power in Rd4 (kW)	1	0.41	0.11	0.055	0.030	0.022	0.071	0.041	0.029	0.023	0.018
	3	0.67	0.20	0.086	0.053	0.032	0.025	0.016	0.011	0.0085	0.0066
	BC 5	0.564	0.180	0.092	0.057	0.034	0.016	0.010	0.007	0.0052	0.0040
	7	0.487	0.148	0.083	0.053	0.032	0.011	0.0069	0.0048	0.004	0.0028
	10	0.41	0.123	0.073	0.047	0.029	0.008	0.0048	0.0034	0.0026	0.002

Table 7. The energy deposited in the dump resistors during quenching

Variable	Quench in C1 (Bucking Coil)					Quench in C2 (Main Coil)				
	Rd (Ohms) \ MC	1	3	5	7	10	1	3	5	7	10
Energy Dissipation in Rd1 (kJ)	1	5.69	7.04	7.39	7.55	7.68	0.004	0.0025	0.002	0.0022	0.002
	3	3.14	4.66	5.18	5.44	5.65	0.001	0.0009	0.0008	0.00075	0.00073
	BC 5	2.17	3.52	4.04	4.32	4.56	0.0007	0.0005	0.0005	0.00045	0.00044
	7	1.66	2.83	3.33	3.60	3.84	0.00053	0.00037	0.00033	0.0003	0.00031
	10	1.23	2.20	2.64	2.89	3.12	0.0004	0.00026	0.00023	0.00022	0.0002
Energy Dissipation in Rd2 (kJ)	1	1.35	0.56	0.355	0.260	0.186	1.94	1.14	0.806	0.624	0.465
	3	2.25	1.12	0.748	0.562	0.410	1.94	1.14	0.807	0.625	0.466
	BC 5	2.61	1.41	0.98	0.746	0.552	1.94	1.14	0.81	0.625	0.466
	7	2.80	1.60	1.13	0.87	0.652	1.94	1.14	0.808	0.62	0.466
	10	2.96	1.77	1.28	1.00	0.76	1.94	1.14	0.808	0.625	0.47
Energy Dissipation in Rd3 (kJ)	1	1.41	0.59	0.372	0.271	0.193	1.77	1.04	0.740	0.573	0.428
	3	2.31	1.16	0.771	0.579	0.421	1.77	1.05	0.741	0.574	0.428
	BC 5	2.65	1.45	1.00	0.763	0.563	1.77	1.05	0.74	0.574	0.428
	7	2.83	1.63	1.15	0.89	0.663	1.78	1.05	0.742	0.57	0.428
	10	2.99	1.80	1.30	1.02	0.77	1.78	1.05	0.742	0.574	0.43
Energy Dissipation in Rd4 (kJ)	1	0.015	0.004	0.002	0.0016	0.001	0.008	0.004	0.003	0.0028	0.002
	3	0.017	0.005	0.003	0.0018	0.0013	0.003	0.001	0.001	0.00095	0.00085
	BC 5	0.014	0.005	0.002	0.0017	0.0012	0.002	0.0009	0.0007	0.00057	0.00051
	7	0.012	0.004	0.002	0.002	0.0011	0.0011	0.00064	0.00048	0.0004	0.00037
	10	0.009	0.0035	0.0020	0.0014	0.001	0.0008	0.00045	0.00033	0.00029	0.0003

Table 8 summarizes energy dissipation in quenching coils.

Table 8. Energy dissipation in quenching coils

Variable	Quench in C1 (Bucking Coil)					Quench in C2 (Main Coil)				
Energy Dissipation in the Quenching Coils (kJ)	Rd (Ohms) \ MC	1	3	5	7	10	Rd (Ohms) \ MC	1	3	5	7	10
	1	2.45	2.73	2.80	2.83	2.85	1	7.20	8.73	9.37	9.72	10.02
	3	3.20	3.98	4.22	4.34	4.43	3	7.20	8.73	9.37	9.72	10.02
	BC 5	3.47	4.53	4.90	5.09	5.25	BC 5	7.20	8.73	9.37	9.72	10.02
	7	3.61	4.85	5.31	5.56	5.76	7	7.20	8.73	9.37	9.72	10.02
	10	3.73	5.14	5.70	6.01	6.28	10	7.21	8.73	9.37	9.72	10.03

In the case of quenching main coil, dissipated energy does not depend on the dump resistor connected in parallel to the bucking coil (Rd1) and increases when Rd2 increases, so it is beneficial for the energy extraction efficiency to have Rd2 low. When the bucking coil quenches, we observe similar trend, except the energy deposition in the coil is smaller when both Rd1 and Rd2 are smaller.

3. Modeling accuracy

To compare results presented in the previous section with what was found earlier, when older version of the modeling code was used, several cases were studied with parameter set that would give results close to previously obtained. Table 9 displays the parameter set for each case.

Table 9. Case parameter set

Case	Rd-BC (Ohms)	Rd-MC (Ohms)	Initial Current (A)	Quench Location (Coil)	Step Size (s)
1	20	20	249	C1	10^{-4}
2	50	50	249	C1	10^{-4}
3	1000	1000	249	C1	10^{-5}
4	1000	1000	249	C2	10^{-5}

For the cases #1 and #2, dump resistance values are increased gradually beyond what was studied in the previous section. The goal of this exercise was to understand starting with what value of the dump resistor no effect to quench propagation in the quenching coil is observed. Cases #3 and #4 were set to compare results with what was found previously in [1].

Table 10 shows results obtained for these cases. Comparing data from the Table 10 for cases #1 and #2 with corresponding data from the Tables 1 to 8, we can conclude that even 50 Ohm resistance cannot be considered high enough to neglect. Nevertheless, at Rd = 10 Ohm, the power dissipation rate in Rd1 reaches its maximum.

Table 10. Summary of results for cases #1 to #4 of Table 9

Case	Max. Rc1 (Ohms)	Max. Rc2 (Ohms)	Max. Rc3 (Ohms)	Max. Rc4 (Ohms)	Max. Temp. in C1 (K)	Max. Temp. in C2 (K)	Max. Temp. in C3 (K)	Max. Temp. in C4 (K)
1	10.13	0	0	0	301.34	4.2	4.2	4.2
2	11.65	0	0	0	345.73	4.2	4.2	4.2
3	13.31	0	0	0	327.54	4.2	4.2	4.2
4	0	3.08	0	0	4.2	89.42	4.2	4.2

Case	Ext. V1 (V)	Ext. V2 (V)	Ext. V3 (V)	Ext. V4 (V)	Ext. Voltage Across BC1 (V2-V1) (V)	Ext. Voltage Across MC1 (V1-V0) (V)	Ext. Voltage Across MC2 (V0-V4) (V)	Ext. Voltage Across BC2 (V4-V3) (V)
1	-386.48	398.61	398.61	390.04	781.80	-389.68	-393.27	-18.44
2	-520.39	532.44	532.44	521.27	1048.51	-524.70	-525.58	-17.55
3	-685.91	700.74	700.74	685.96	1380.91	-691.58	-691.63	-20.52
4	178.97	175.28	175.28	171.59	-5.12	177.55	-173.01	-5.12

Case	Max. Power in Rd1 (kW)	Max. Power in Rd2 (kW)	Max. Power in Rd3 (kW)	Max. Power in Rd4 (kW)	Energy Dissipation in Rd1 (kJ)	Energy Dissipation in Rd2 (kJ)	Energy Dissipation in Rd3 (kJ)	Energy Dissipation in Rd4 (kJ)	Energy Dissipation in Coil (kJ)
1	30.82	7.47	7.61	0.011	2.20	0.537	0.540	0.0004	7.64
2	22.17	5.42	5.43	0.004	1.20	0.2936	0.2941	0.0002	9.13
3	1.92	0.470	0.471	0.0002	0.080	0.020	0.020	9.1e-6	10.80
4	1.4e-5	0.032	0.029	1.4e-5	2.3e-6	0.0054	0.0050	2.3e-6	10.91

Rd = 1000 Ohm is what can be considered “no resistance”. The modeling in this case was made with smaller time step (10^{-5} s) to avoid convergence problem; obtained results are well compared with those in a corresponding case in [3], where the dump resistor connected in series is set to zero. Some inconsistency was observed while analyzing this set of data and comparing it with the Rd = 50 Ohm case, like slightly lower temperature of the quenching coil. This motivated a study of convergence, which is summarized in Table 11 and 12.

Table 11 displays a parameter set for four cases. For all the cases, the value of all dump resistors Rd = 3 Ohm was chosen, and only quenches in the bucking coil (C1) were considered. Time step in each study was decreased by factor 10 in comparison with a previous one. To reduce computation time, only the initial period of the quenching cycle lasting 10 ms was modeled, with convergence checked by comparing modeling results.

Table 11. Case parameter set

Case	Rd-BC (Ohms)	Rd-MC (Ohms)	Initial Current (A)	Quench Location (Coil)	Step Size (s)	Modeling Duration (s)
1	3	3	249	C1	10^{-3}	0.01
2	3	3	249	C1	10^{-4}	0.01
3	3	3	249	C1	10^{-5}	0.01
4	3	3	249	C1	10^{-6}	0.01

Results of the convergence study are summarized in the Table 12.

Table 12. Convergence study results

Case	Max. Rc1 (Ohms)	Max. Rc2 (Ohms)	Max. Rc3 (Ohms)	Max. Rc4 (Ohms)	Max. Temp. in C1 (K)	Max. Temp. in C2 (K)	Max. Temp. in C3 (K)	Max. Temp. in C4 (K)
1	1.01	0	0	0	329.24	4.2	4.2	4.2
2	0.64	0	0	0	71.39	4.2	4.2	4.2
3	0.57	0	0	0	53.58	4.2	4.2	4.2
4	0.58	0	0	0	53.76	4.2	4.2	4.2

Case	Ext. V1 (V)	Ext. V2 (V)	Ext. V3 (V)	Ext. V4 (V)	Ext. Voltage Across BC1 (V2-V1) (V)	Ext. Voltage Across MC1 (V1-V0) (V)	Ext. Voltage Across MC2 (V0-V4) (V)	Ext. Voltage Across BC2 (V4-V3) (V)
1	-22.79	51.37	51.37	29.99	55.37	-24.14	-30.34	-24.82
2	-20.55	42.56	42.56	26.39	52.89	-21.34	-26.70	-18.69
3	-18.74	38.62	38.62	24.04	48.13	-19.46	-24.32	-16.86
4	-19.20	39.37	39.37	24.59	49.33	-19.92	-24.88	-17.08

Case	Max. Power in Rd1 (kW)	Max. Power in Rd2 (kW)	Max. Power in Rd3 (kW)	Max. Power in Rd4 (kW)	Energy Dissipation in Rd1 (kJ)	Energy Dissipation in Rd2 (kJ)	Energy Dissipation in Rd3 (kJ)	Energy Dissipation in Rd4 (kJ)
1	1.83	0.17	0.30	0.15	0.004	0.0003	0.0006	0.0003
2	1.33	0.14	0.23	0.09	0.003	0.0003	0.0005	0.0002
3	1.10	0.12	0.19	0.07	0.002	0.0002	0.0004	0.0002
4	1.14	0.12	0.20	0.07	0.002	0.0002	0.0004	0.0002

It is possible to consider the time step of 10^{-5} seconds as providing good convergence. Using 10^{-6} s steps can add some “noise” that can distort results. Having in mind that the modeling time will become much longer, one should avoid using this small step. The step length of 10^{-4} s, although not so precise, gives satisfactory and trustable results and much shorter modeling time. We can recommend using this time step in initial phases of studies.

The most critical part of the modeling is a short period of initiation, when most of the circuit variables change significantly after each time step. In future, we will use additional (initial) time step which is smaller than the regular one. This will help to get a better balance between the computation time and the modeling accuracy.

4. Discussion

As was observed earlier, when a bucking coil quenches, conditions in the system are more extreme and dangerous because the total energy of the system is dissipated in a more concentrated volume. Voltage across quenching bucking coil can be approximately twice the highest voltages to ground in the circuit with the voltages to ground at the ends having different signs. Having in mind small size of bucking coils, a limit of the voltage across the coil must be stated at a relatively low level, e.g. 250 V.

In the case of a quenching main coil, the resistors connected in parallel to the bucking coils are almost useless in dissipating energy; only the resistors connected to the halves of the main coil dissipate the extracted energy.

To ensure the safest conditions in the system, low values of dump resistance should be used. The major limiting factor that prevents using a very small resistance is the rise in the current handled by the resistor. Because the elevated current level results in a need of using thicker wires in the current leads, larger heat leak is expected, which can negatively impact the cryomodule and cryosystem design.

Presented data demonstrate that safe protection of the lens can be obtained in a wide range of system parameters, which provides significant flexibility in configuring the protection circuit. One of the arrangements that satisfies most of requirements for different parameters of the circuit assigns the next values to the dump resistors: Rd1 = Rd4 = 3 Ohm and Rd2 = Rd3 = 1 Ohm.

5. Summary

Quench protection of the SS2 focusing lens of the HINS linac was analyzed using a new modeling code which allows more flexibility in choosing a protection solution. Results of the analysis were compared with those previously published and new, more efficient protection circuit configuration was proposed.

There are many ways to improve the quench propagation code, which were partly discussed in [2]. For example, the present model does not take into account heat transfer between coils or though inductive heating of external parts; both features can be added to the code. Nevertheless, at the moment, we consider only making modifications that would result is substantially reduced voltage in the discharge circuit and removal of significant part of the stored energy out of the lens. Cold diodes in combination with dump resistors would be one option to try.

The code in the present state can be adapted for studies related to any system of inductively coupled coil. In particular, important at the moment are studies of focusing lens configurations that would allow significantly reduced nominal current.

References:

1. E. Khabiboulline, I Terechkine, “SSR2 Focusing Lens Quench Protection Study: Dump Resistors Connected in Parallel to Coils of the Lens”, FNAL TD note TD-11-006, April 06, 2011.
2. E. Khabiboulline, I Terechkine, “Modeling Quench Propagation in Inductively Coupled System of Coils: Dump Resistors Connected in Parallel to Each Coil in the System”, FNAL TD note TD-11-011, August 22, 2011.
3. I. Terechkine, “SS2 Focusing Solenoid Quench Protection Study”, FNAL TD note TD-09-016, June 04, 2009.