FERMILAB

Magnet Systems Department - TD

IB3 Press Survey and Collaring Tooling Design

Steven Krave

July 14, 2010

TD-10-016

Outline

- Press Survey
  - Which press(es) can be used to collar 4m coil with dipole style collaring.
- Mangler upgrade evaluation.
  - Determine feasibility to upgrade press to collar HQ coils.
- Dipole style tooling for quadrupole magnets redesign.

Press Survey

- Objectives
  - Determine press linear capacities.
  - Determine press working area.
  - Determine limitations.
  - Use information to determine which press is capable of collaring a 4m coil.

Coil Curing Press

- Uses single 200 ton cylinders per foot.
- Maximum capacity of 400,000 lb/ft.
- 29ft long.
- 10.5 inches of vertical clearance.

Shell Welding Press

- Uses two 60 ton cylinders per foot.
- Max linear capacity 240,000 lb/ft.
- Total working length is 24 feet.
- 24 inches of vertical clearance .

Mangler

- Currently configured with a combination of 100 and 150 ton cylinders.
- Capacity of 600,000lb/ft @10,000 pump psi.
- 8ft long.
- 23.5inches of vertical clearance.

Press Summary

Press	Linear Cap (7500 psi) [lb]	Max Linear cap [lb]	Length [ft]	Vertical Clearance[in]
Mangler	450,000	600,000	8	23.57
Wedling	180,000	240,000	24	24.14
Curing	300,000	400,000	29	10.5

Collaring a 4m coil

- In order to collar a 4m coil, the press must be able to:
  - Exert a force of 90,000lb/ft on each side of the coil.
  - Fit 4m tooling at 168 inches long by 20 inches tall.
- Therefore we quickly rule out the Mangler, it’s too short.

- The Curing Press is long enough but not enough vertical space.
  - Press is designed to be adjustable.
    - Top platen constrained by conduit.
- The only option is the shell welding press.
  - Meets 90,000lb/ft requirement at 7,500 pump psi.

Mangler Evaluation

- In order to collar HQ magnets, it has been proposed that the Mangler be upgraded to maintain acceptable coil pressures over increased surface area.
- In its current configuration using 3 150 ton cylinders per side, TQ max pressure is 236 MPa, however HQ max pressure is 134MPa.
- Ideally a 50% increase in press capacity would be possible.
- Upgrading to 200 ton cylinders would be acceptable.

Component evaluations

- Components were to be analyzed with a safety factor of 3 as a goal.
- Evaluated for yielding and excessive displacements.
- Checked using a combination of hand calculations and FEA.

Support Block

- Modeled as a solid beam.
  - Hand calculations found .02” deflection
  - FEA for actual block found .01” deflection
  - Max Stress 24KSI

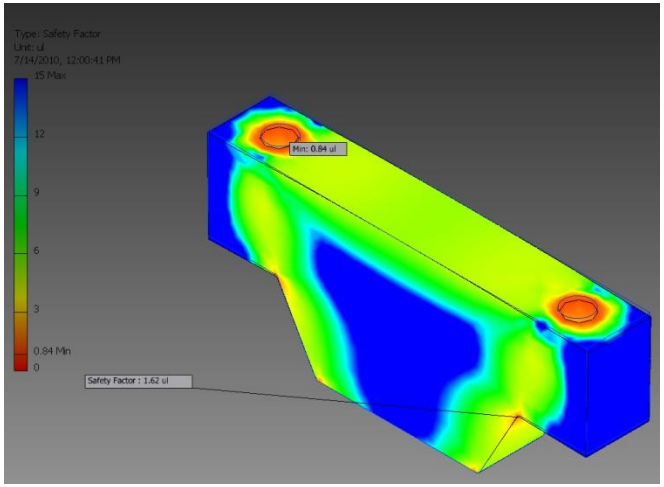

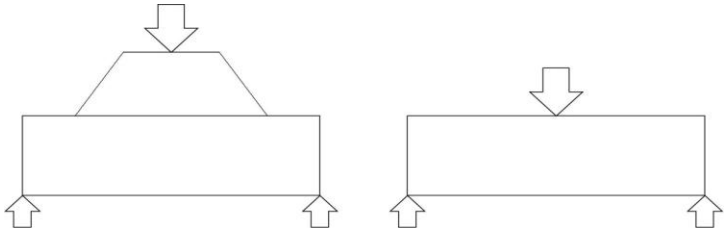

Strongback

- Contact area evaluated for yielding
  - 43in^2 contact area
  - Load at yield greater than 1104 ton/foot
  - SF of 3 allows 184 ton/side

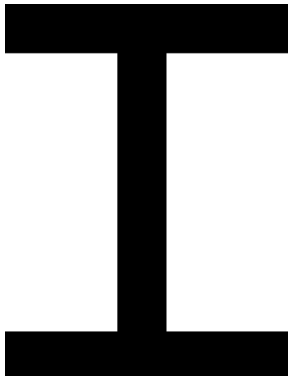

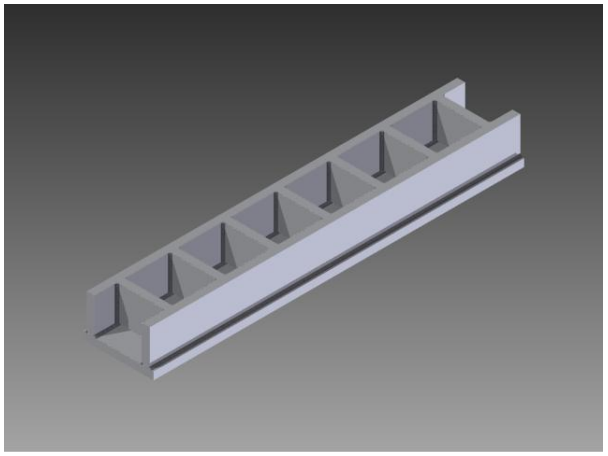

Press Rods

- Construction
  - Constructed of AISI 1144 “Stressproof”
    - Yield 100,000 psi
    - Tensile 115,000 psi
  - 3-8 UNC
- Yield Strength = 651,000lb per rod
- Current max load = 300,000lb per rod
  - SF=2.2
  - Using SF of 3, max load would be 217,000lb (108 tons)

Upgrade Feasibility

- What needs to be replaced or modified in an upgrade to maintain current safety factor?
  - Press rods
  - Cylinders
  - Support blocks
  - Most all remaining hardware
- Other Considerations
  - Very limited room for new cylinders
  - When is it more logical to build a new press?

Dipole Style Quadrupole Tooling

- Why use dipole style tooling?
  - Reduce stress concentrations and discontinuities throughout the coil
  - Keying can be done in a single run
- Dipole style collaring has already been successfully demonstrated on the 1m TQC02 magnet.

Current Short Magnet Tooling

- Short tooling utilized existing assemblies with some modification
- Used hydraulic cylinders mounted on 5x9 U-Channel to insert keys

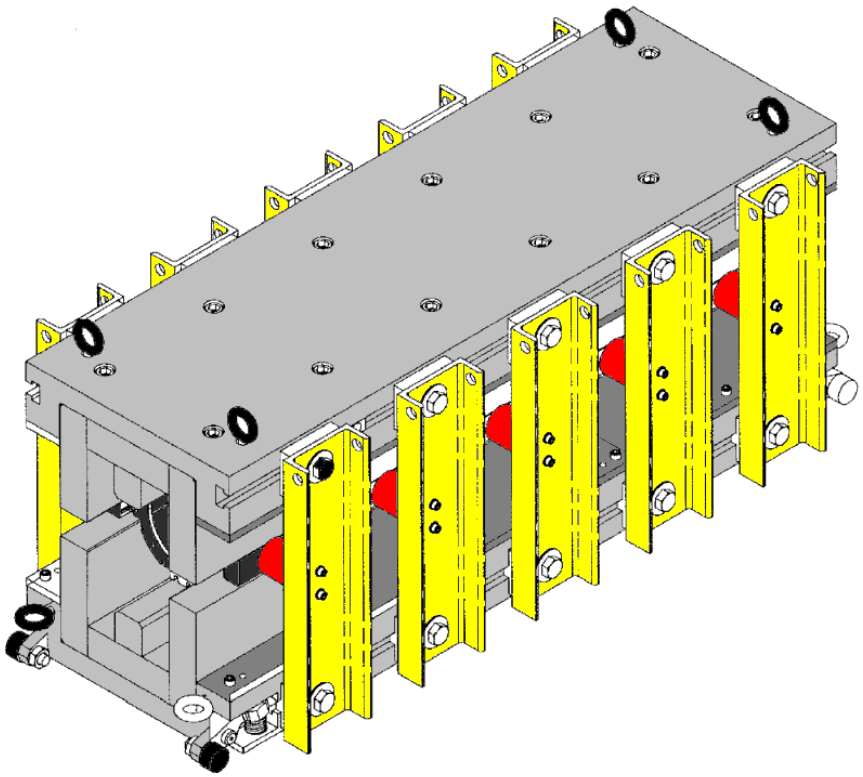

Limitations of Current tooling

- Current collaring tooling is not scalable to longer coils.
- U-Channel pusher bars deform significantly under load to the point of yielding.

Shell Welding Press

- In order to adapt tooling to collar a 4m coil, it would need to fit in the appropriate press
- The Shell welding press has been found to be acceptable to use in the collaring process.
- As the welding press is also used for welding, the weld carriage and Thompson rails needed to remain in place.

Shell Welding Press (contd.)

- Currently the contact tooling in the press consists of 2 large steel plate and supporting hardware.
  - The bottom plate and blades would need to be removed from the press to accommodate the collaring tooling.
- The weld carriages can be moved to their storage position without causing problems for new tooling.
  - The rails the carriages sit on will remain attached to the press, creating a space constraint of 23.5in.

Current tooling

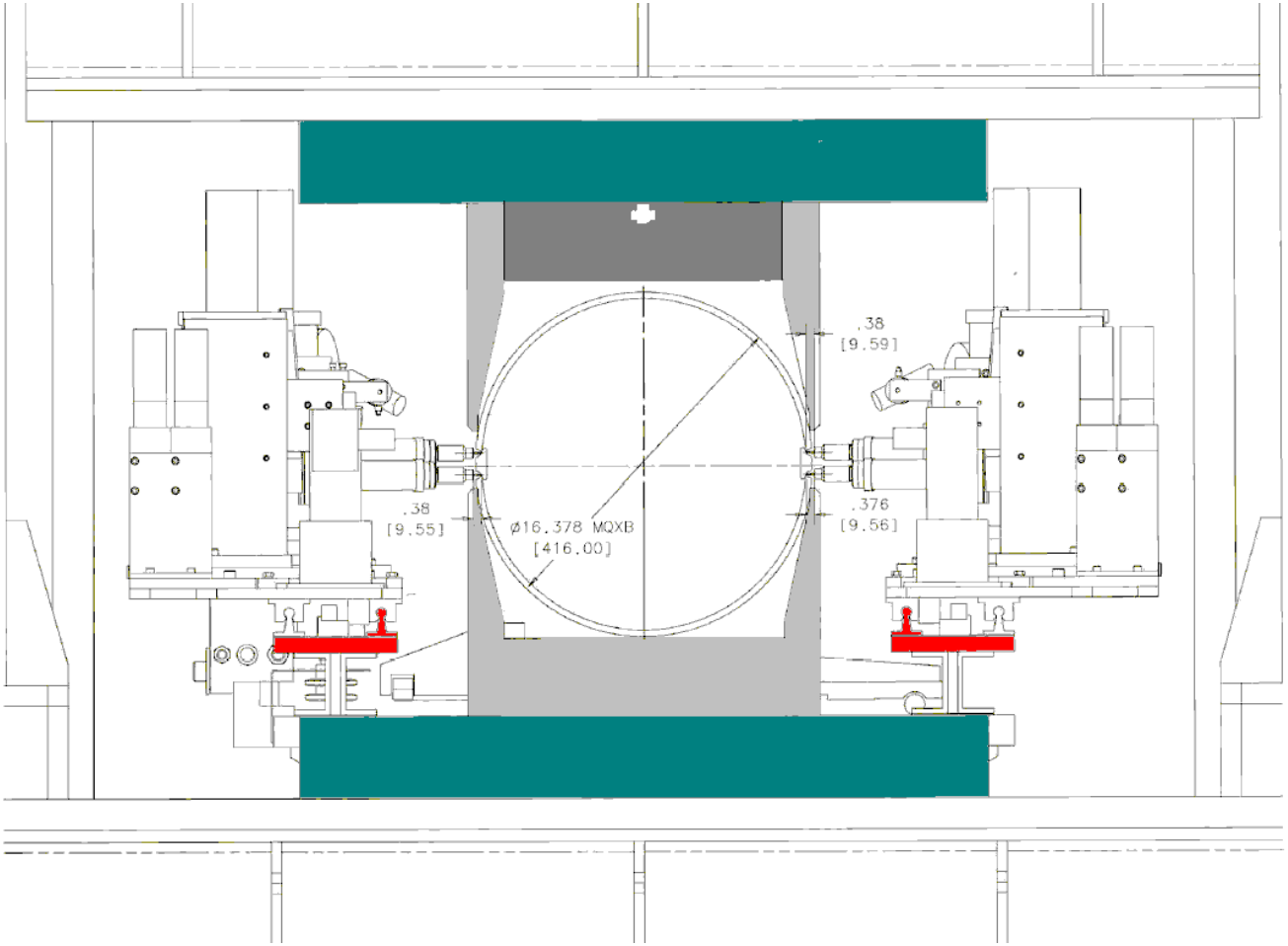

The Pusher Bars

- In order to reduce the deflections of the pusher bars, a wide variety of modifications and designs were investigated.
- Models were evaluated as simple supported beams.
- Maximum deflections were constrained to .01” with a safety factor of 3 or higher.

- Initial thoughts were to convert the existing C-channel into a box beam type structure by welding a plate on the backside.
- Hand Calculations and rough FEA both resulted in very poor results.

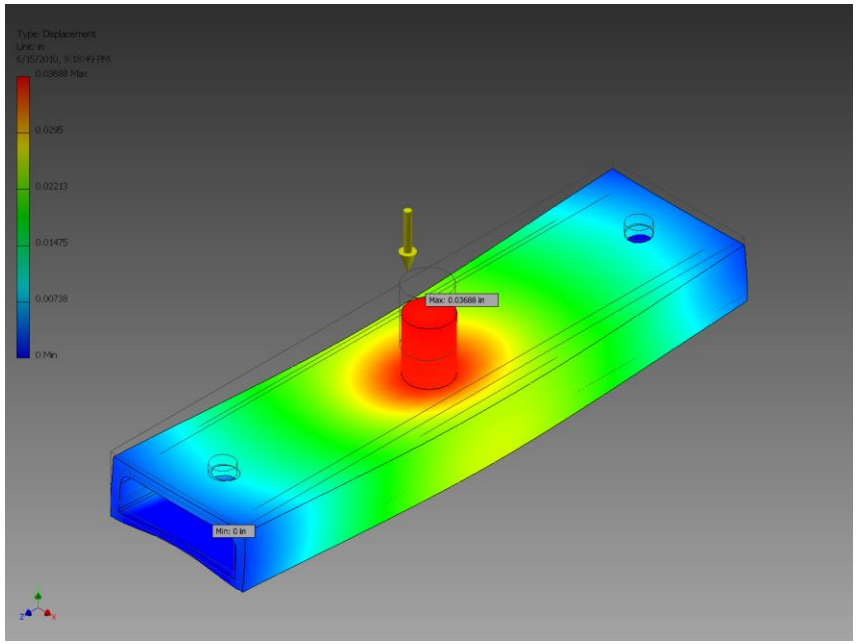

Box Beam Construction

- In keeping with the idea of a box beam type construction, some various wall thicknesses were tested in square tube configurations to determine necessary size to limit deflection.

Box Beam wall thickness for an A36 square steel tube

Wall Thickness (in)	Minimum side length (in)
1/8	4.36
3/16	3.88
1/4	3.61
3/8	3.30
solid	2.95

- Since deflection is a function of the moment of inertia of the beam, which in turn is a function of the base*depth^3, why not increase the depth?
  - Size constraints imposed by the welding equipment limit size of tooling to a depth of 3.75”.
  - A 3.5” box beam would have to have a 3/8 wall, as well as a notch cut out for the hydraulics.
    - At this point, a solid bar will work just as well.

Preliminary solid design

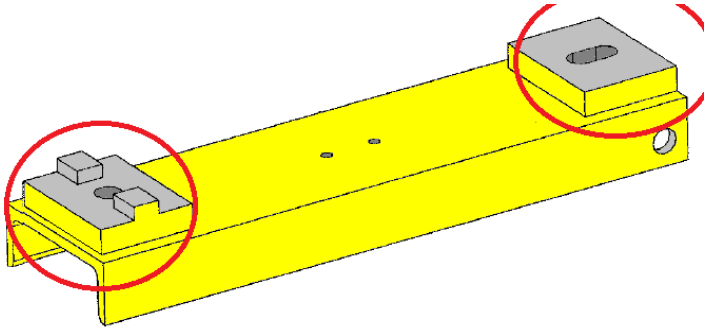

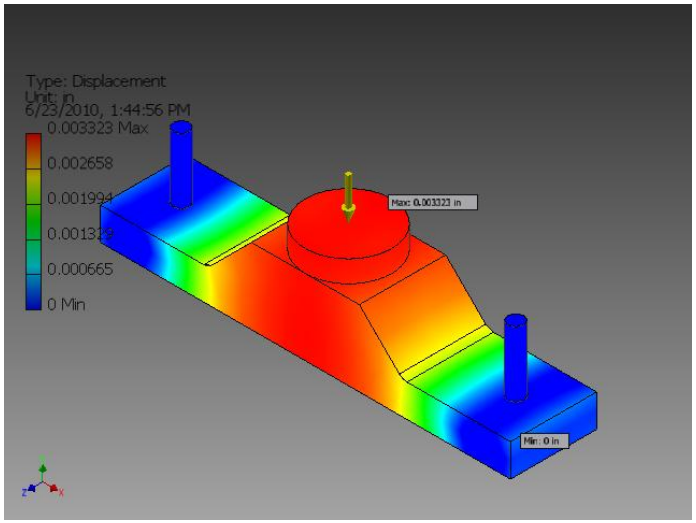

- Using the same style mounting plates this sort of design allows very good deflection resistance in a small package
- Utilized a block as thick as possible using a .44” stroke cylinder
- Deflected .003” at maximum tested keying load of 6000 pump psi
- Estimated weight of 45lbs
- Since this design comes in at 1/3rd the required deflection, aluminum would reduce weight and maintain an acceptable deflection of .01” at a weight of approximately 15 lbs

- Using a shorter cylinder left less than .1 inch of an inch of extra stroke to work with.
- Back to the 1 inch stroke cylinder.
- With the larger cylinder, there needs to be a notch or spacer to place the cylinder in the required location.

Final Pusher Design

- Final Pusher can be machined out of a 3x3 piece of 6061 aluminum
- Maximum deflection of .010” at 6000 pump psi
- Weight 14lb
- Max stress ≈6ksi

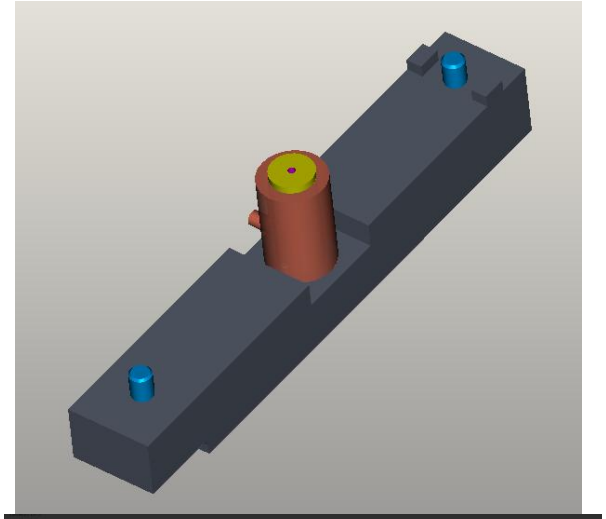

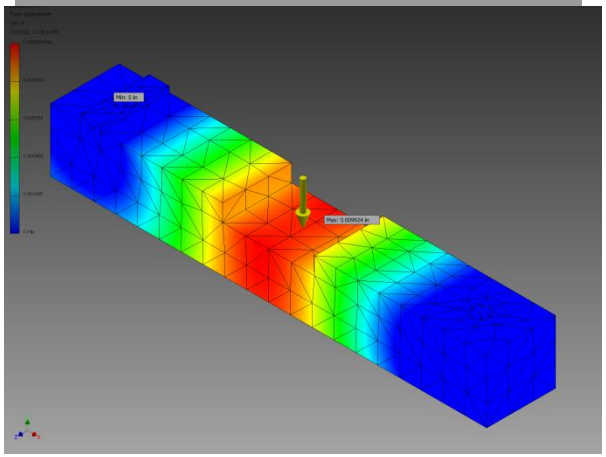

Plunger Analysis

- Before final design, will the plunger bar deflect excessively?
- Plunger could be modeled as a continuously loaded beam with multiple supports.
- Hand calculations determined max deflection of .0032”.
- FEA results showed .0036” deflection for inner span, .0042” for edge span.

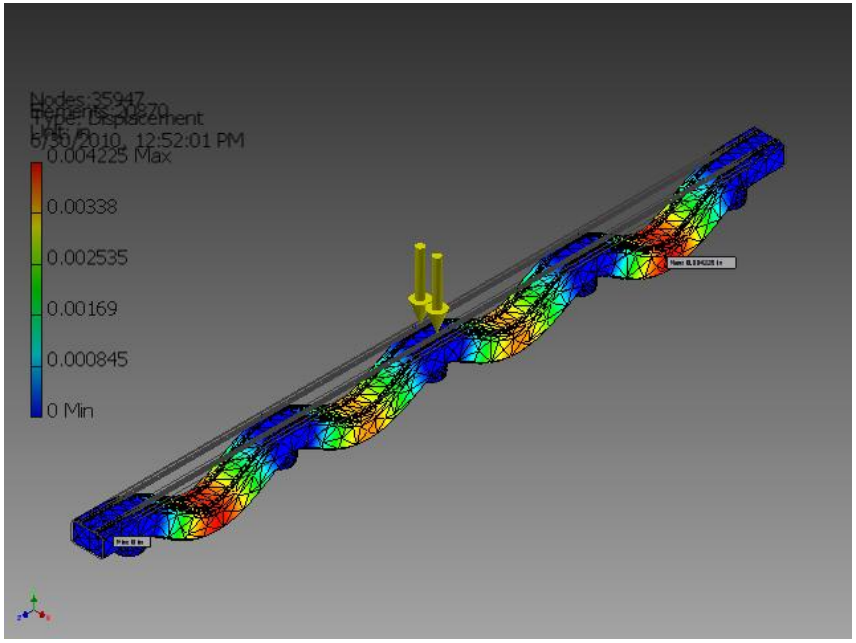

- Plunger weighs .625lb/in or about 100lbs for 4m length

Final Tooling Design

- As with the short tooling, some existing tooling was available to modify for current needs.
- Existing tooling has different die roller configuration.
  - New long tooling would need to fit around this limitation.
- New collaring tooling otherwise the same as short tooling with exception to hole patterns.

Short tooling

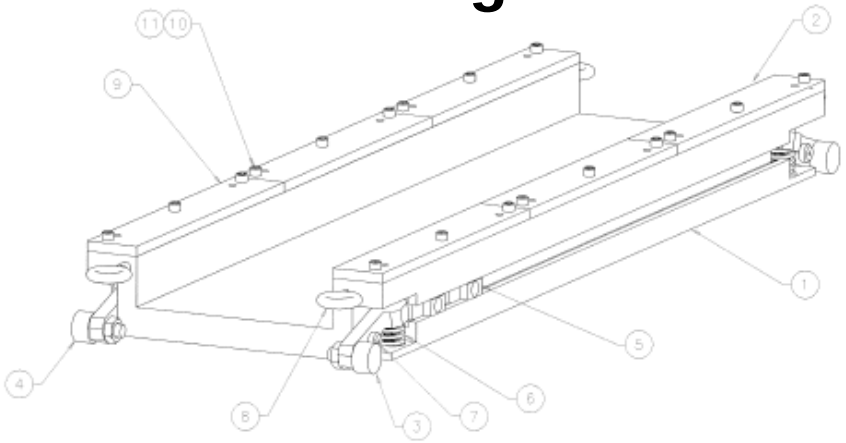

Long Tooling

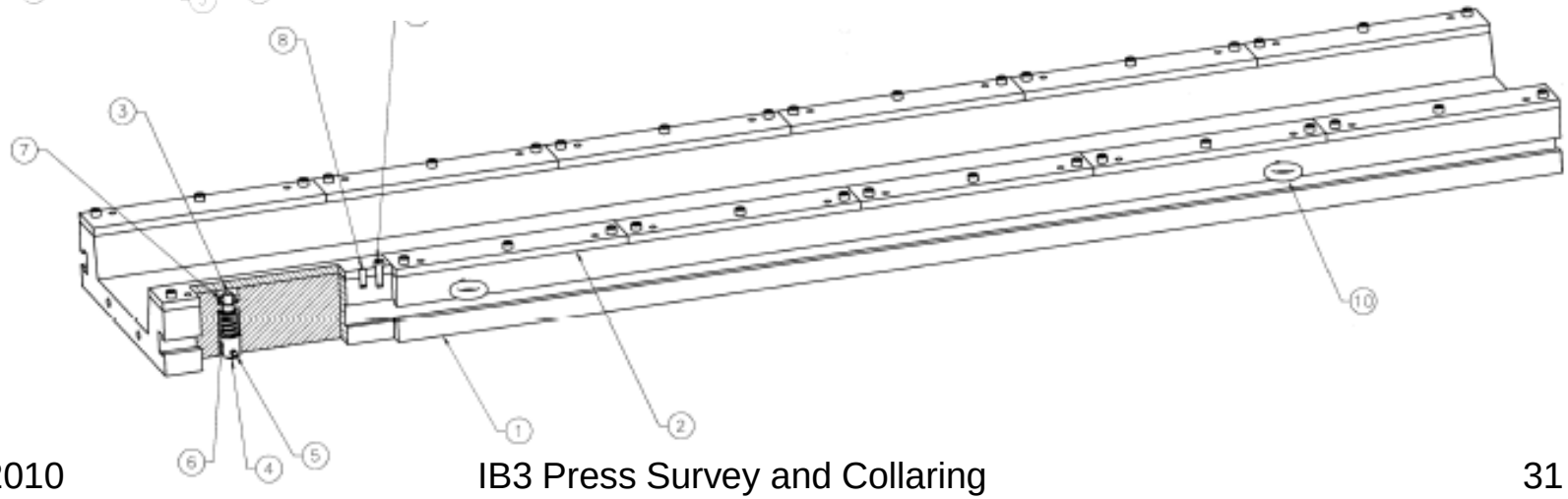

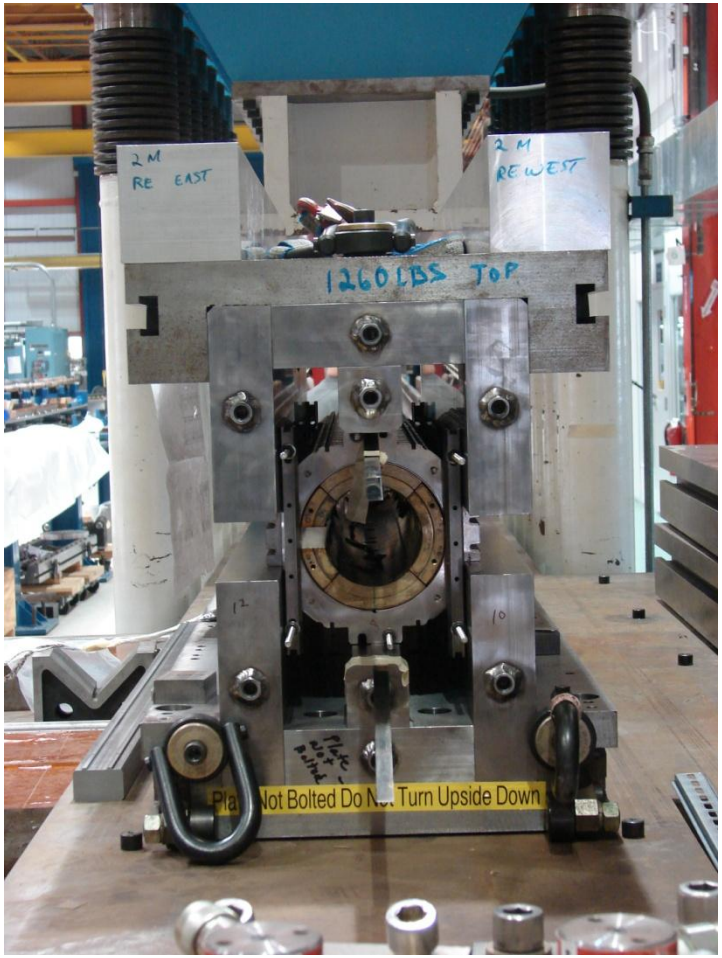
2 M
RE EAST
2 M
RE WEST
1260 LBS TOP
Not Bolted Do Not Turn Upside Down

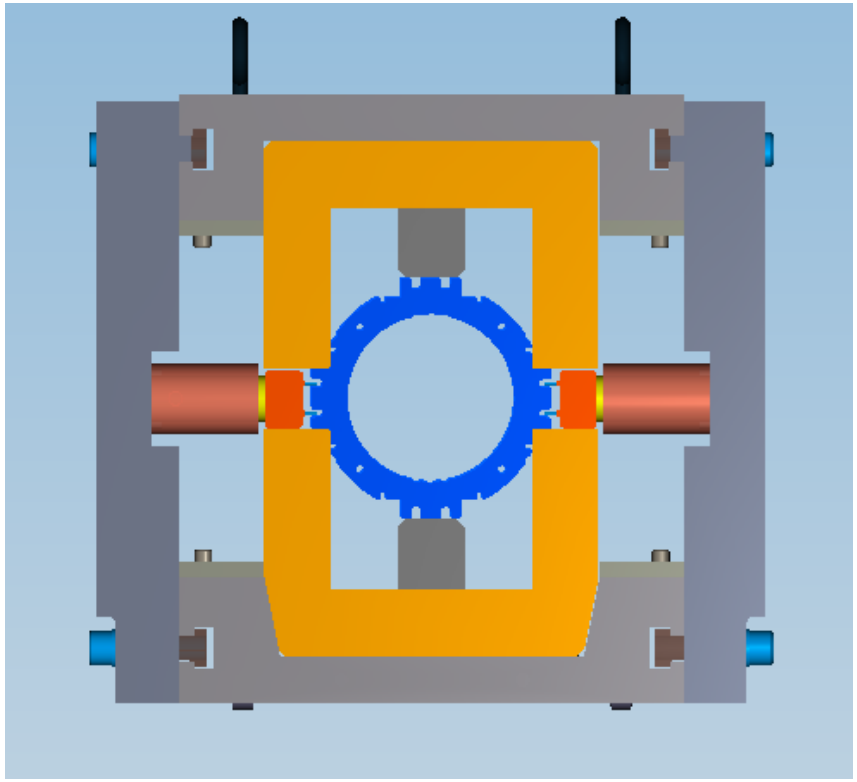

2m of Collaring Assembly

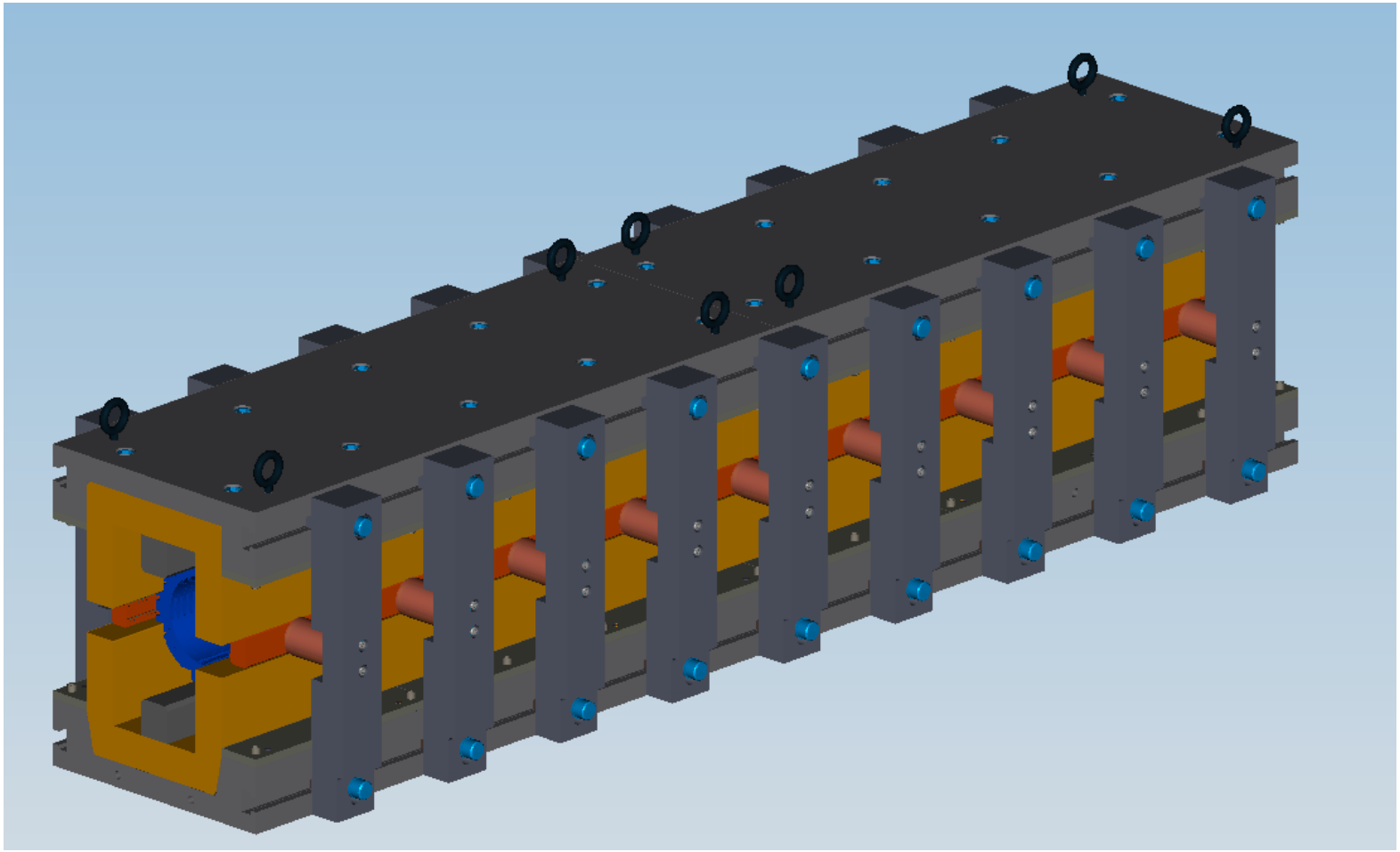

Other considerations

- Collaring tooling should be practical and easy to use.
- Scaling should be easily accomplished.
- Coil must be able to be assembled within tooling.
- Using the assembly mandrel developed at LBNL, coil assembly would be possible on insertion table.

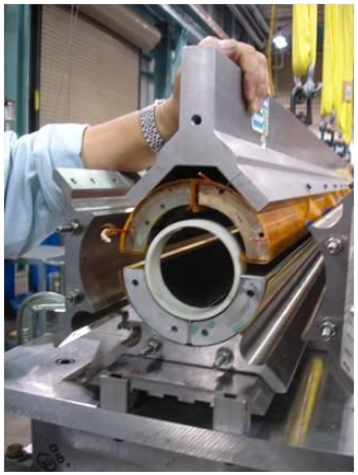

To Do's

- Create detailed drawings for procurement
- Add measurement holes to key pusher to ensure keys are fully seated.
- Develop feature to handle key pusher with crane.
- Develop way to tie 2m contact tooling sections together.

Conclusion

- Shell Welding press is the best candidate for dipole collaring.
- Mangler upgrade is not practical.
  - Better off redesigning a new press.
- Key Pushers redesigned to prevent yielding.
- Long dipole collaring tooling top and bottom plates exist and can easily accommodate the short tooling design.