TD-10-015

07/2010

4m Dipole Style Quadrupole Tooling Investigation and Design

S. Krave, F. Nobrega

Fermilab, Technical Division

In TD-10-14, it was found that the shell welding press would be capable of collaring a 4m coil with the proper tooling. Since there is already a set of tooling to collar a 1m coil, it would be fairly easy to create tooling for a 4m coil based on the same design. The existing design does have some shortfalls however that would need to be revised for the 4m tooling. A major issue to address was the key pusher design as the existing assembly yielded under load and would therefore be unsuitable for reuse in the new design. A second major consideration concerning the pusher bars is that there will be limited space within the press. Along with the pusher bars, the bottom matrix assembly was not designed to be scaled up or patterned to collar longer coils. The main features causing problems are the collapsible die rollers. After addressing the key pushers and the bottom matrix, the assembly should be relatively straightforward.

Investigation and revision of the Pusher Bars

The original pusher bars consist of 10 ton 1” travel hydraulic cylinders attached to a 19” long piece of 5x9 U channel. There are spacer plates located at the top and bottom of the channel to align the cylinder to the key plunger with the proper offset. The current key pusher bar can be seen below in Fig. 1

Figure 1: Key Pusher Bar

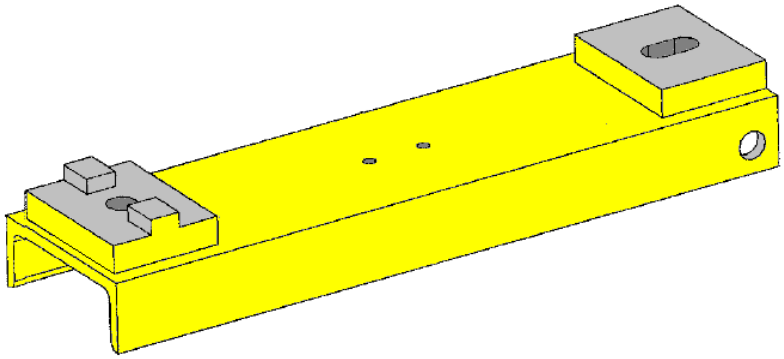

The pusher bars are spaced 9” apart along the length of the coil. When collaring TQC-02, key pusher pressure ranged between 0 and 6000 psi over 5 assemblies. At those pressures, the pusher deformed .09” to yielding and therefore is not a suitable design. Not only did the entire assembly deform outward, but the cylinder left a large impression between the side flanges. Ideally the new assembly would be able to withstand maximum key pressures without yielding or displacement over .01”. In order to increase the overall stiffness, some basic cases were observed to provide direction for the design. The model used to simulate the pusher was that of a simply supported beam with each bolt acting as a support and the hydraulic cylinder acting as a point force. In this case, the max deflection for the beam would simplify to:

$$\frac{\quad}{\quad} \tag{1}$$

Where v_{max} is the maximum deflection, P is the applied load at center, L is the supported length, E is the modulus of elasticity for the materiel, and I is the moment of inertia. For the purposes of this project, v_{max} was set to .01”. Other quantities specified by the design or use were P=12,000lb and L=15.5” The basis for the value for P was determined from the previous testing on TQC02. The value came from the maximum pump psi used and the capacity of the cylinder.

The initial modification considered for reducing the deflections on the pusher bars was simply to weld a steel plate on the open side of the U channel. Although this modification greatly reduced the estimated deflections form .09” to .02” it was still insufficient. Since the deflections are a function of the moment of inertia, and therefore the depth of the beam, the depths of the bar were varied. For practicality and ease of assembly, a variety of common wall thicknesses for square beams were evaluated to determine the smallest size tube necessary. The results of this exercise can be found below in Table 1.

Table 1: Side length necessary to maintain .01” displacement at 6000 pump psi

Wall Thickness (in)	Minimum side length (in)
1/8	4.36
3/16	3.88
1/4	3.61
3/8	3.30
solid	2.95

With this data, it would appear that using a large tube with a thin wall would be most appropriate. However, space constraints are still to be considered. In the Shell Welding Press, there is welding equipment on both sides that limits tooling width to 23.5 inches. Since the 4m tooling will be similar to the 1m tooling, the bottom and top matrix assemblies are 16” wide. This leaves a maximum of 3.75” of clearance on a side. Since there is essentially no room for a box beam configuration utilizing similar mounting techniques, it is easy to conclude that a solid bar would be the most logical configuration based on the dimensional constraints imposed by the welding equipment. After a investigating a few solid pusher revisions an adequate design was determined which used the same style mounting plates with a .44” stroke cylinder. The bar deflected approximately .003” with a weight of 45lbs. Observing that the deflections were significantly lower than required, it was possible to reduce the weight of the bar to about 15lbs by using 6061 aluminum instead and still maintaining deflections of under .01”. Upon further investigation using a .44” stroke cylinder would only allow a small bit of extra travel if the pusher bars or assembly were out of line in any way. A final design was investigated using a 3” x 3” aluminum bar without the additional contact surfaces used on the U channel. This final design shows deflections of .099” at maximum key load and very low stresses throughout the part.

Figure 2: Revised Key Pusher

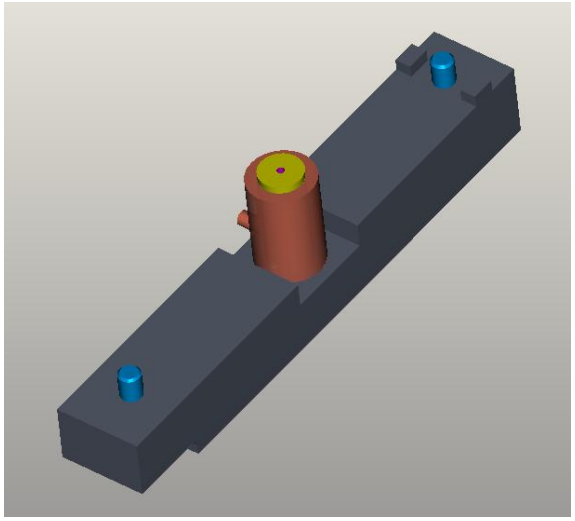

This final pusher bar design would weigh in at approximately 15 lbs and suitably fill its requirements. Instead of using spacers to position the cylinder in the correct location, there would be a large notch cut out of the bar to recess the cylinder.

Analysis of Plunger Bar

In the short tooling, pressure to the keys was applied via a plunger bar. This plunger bar served as an interface between the forces exerted by the cylinders located on the pusher bars and the keys themselves. In order to assure that the keys would be inserted to full depth, the plunger bar would have to deflect minimally; otherwise keys may not seat fully requiring adjustments and another insertion into the press. The plunger bar was modeled as member with a distributed load and multiple supports. In order to calculate displacements, a section of the bar was analyzed as a fixed on both ends as moments cancel at the cylinders and translations were assumed to be minimal. Under these assumptions, the max deflection of the pusher bar becomes:

$$\frac{\quad}{\quad} \tag{2}$$

Where W is the total applied load. Using this model with 9 inch cylinder spacing, deflections were shown to be .0032”” using hand calculations and between .0036” and .0042” using FEA. These results show that the current pusher bar design is adequate for the task. A visualization of the results from FEA can be seen below in Fig 3

Figure 3: Deflections of Key Plunger under max keying load

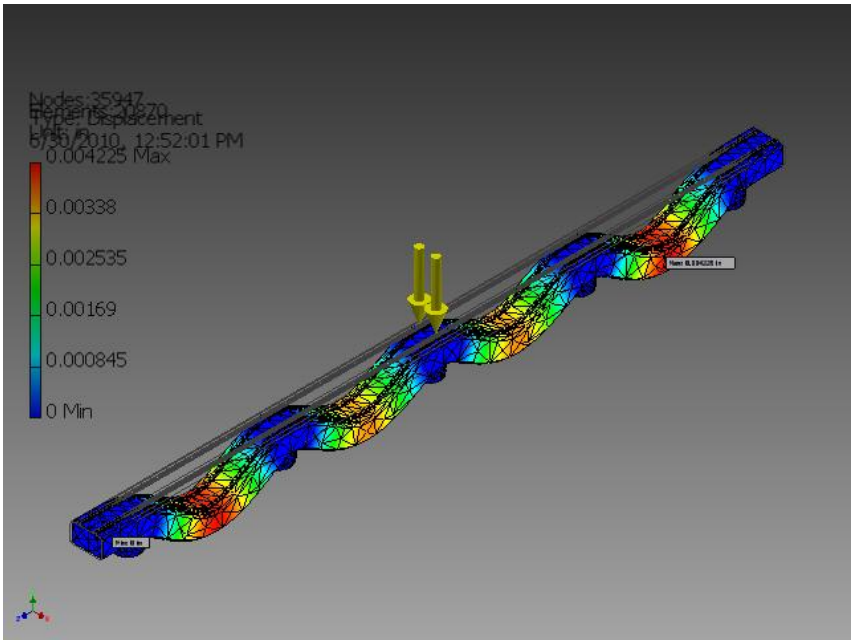

Real world deflections should be even smaller as the pressure exerted on the plunger bar will be proportional to the depth of the keys at a point. The full size pusher bar will most likely span the entire length of the tooling which would come in around 160 inches. The bar would have a weight of .625 lb/in so it would weigh in at around 100 lbs.

Investigation and revision of the Bottom Matrix Assembly

When expanding the short tooling design for a longer coil, the bottom matrix is no longer feasible. The short tooling uses 2 die rollers per side which protrude from the ends of the tooling, which would prevent an end to end layout. There is a similar piece already in existence however which does not have protruding rollers, but the base is of a slightly different shape with slanted sides. The differences between the assemblies can be seen in Figure 4.

Figure 4: Short and Long Bottom Matrix Assemblies

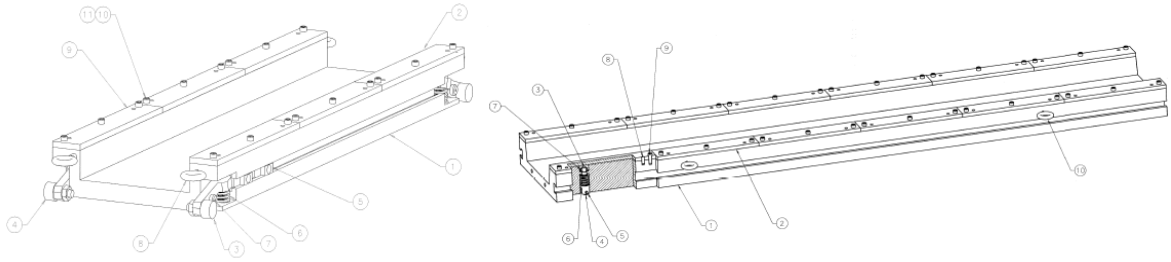

In order to work around the slanted side, the tooling to be added can be designed to fit around the sides.

Adaptation of short tooling for 4m coils

With the individual components in a state to be integrated into the assembly, the remaining components of the tooling can be created and a model can be constructed. The other components not covered more in depth had only minor changes involving part length and hole patterns. The new tooling would consist of 4 top sections at 42” long and 2 bottom sections at 84” long. The key plunger bar would extend then entire length of the press. In total there would be 36 key pusher assemblies, 18 on each side on 9” centers. A 3D model can be found below in Figure 5.

Figure 5: Final Long tooling design

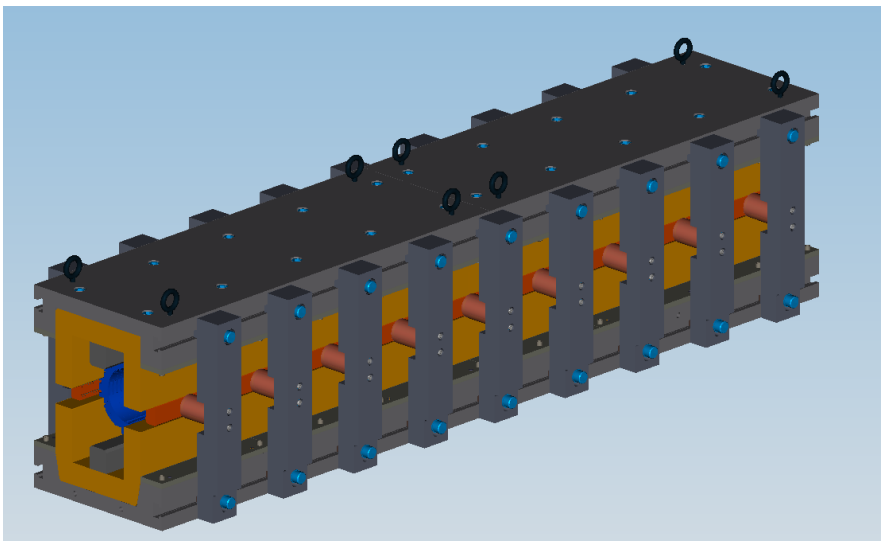

Conclusion

With a final model created, this project is well on its way to realization. A few things are left to do such as create a method of combining the two sections so it behaves as one piece on removal from the press, adding handling equipment to the plunger bar and procuring final drawings. Overall, this is a fairly straightforward modification of a simple and straightforward design.