Technical Division

FERMILAB
Technical Division

VTS2&3 Functional Requirements Specification

Prepared by: Camille M. Ginsburg Date: 21 Oct '09 Camille Ginsburg, VTS2&3 Project Manager	**Organization** TD/SRF	**Extension** 3901
Reviewed by: Cosmore Sylvester Date: 10-21-09 Cosmore Sylvester, VTS2&3 Project Engineer	**Organization** TD/T&I	**Extension** 4765
Reviewed by: Date: 10/21/09 Ruben Carcagno, T&I Department Head IB1 Test Area Manager	**Organization** TD/T&I	**Extension** 3915
Reviewed by: Mark Champion Date: Oct 21, 09 Mark Champion, SRF Department Head	**Organization** TD/SRF	**Extension** 3906
Reviewed by: Mishra Date: 10/21/09 Shekhar Mishra, ILC Program Deputy Director Collaboration coordinator	**Organization** TD/HQ	**Extension** 4094
Reviewed by: Apollinari Giorgio Date: 9/21/09 Giorgio Apollinari, Technical Division Head HINS Project Manager	**Organization** TD/HQ	**Extension** 4641
Reviewed by: S.D. Holmes Date: 10/22/09 Steve Holmes, Assoc. Director for Accelerators Project X Project Manager	**Organization** Directorate	**Extension** 3988
Approved by: Date: 10/22/09 Robert Kephart, ILC Program Director	**Organization** Directorate	**Extension** 3135

Revision Page

Revision	Step No.	Revision Description	Date
1	N/A	Initial Release	10/21/2009

SCOPE

The Fermilab Vertical Cavity Test Facility (VCTF) will be upgraded with two additional cryostats, VTS2&3. This document defines the programmatic need and the high-level functions the VTS2&3 cryostats and associated test system are to fulfill, as well as the end-use of the VTS2&3 cryostats.

1. Introduction

The Fermilab Vertical Cavity Test Facility (VCTF) has been operational since September 2007, and consists of a single vertical test cryostat (VTS1) designed to vertically test single bare 9-cell 1.3 GHz elliptical superconducting RF cavities. Upgrades to VTS1 have extended our ability to test also single-spoke resonators (SSR1) or up to two 1-cell elliptical cavities per cooldown. The VCTF is now being upgraded with two additional cryostats, VTS2&3, to broaden our capability to test cavities for future Fermilab projects. This upgraded facility must be capable of vertically testing various cavities in support of Project X, generic SRF R&D and ILC R&D.

We describe the functional requirements of VTS2&3, including types of cavities, preliminary safety requirements, anticipated test requirements, throughput requirements and timescale, and fundamental facility limitations. We conclude with the design cavity configurations.

2. Types of cavities to be accommodated

Provisions for testing the following types of cavities are required:

1. bare 1-cell 1.3 GHz elliptical cavities
2. bare 9-cell 1.3 GHz elliptical cavities
3. dressed 9-cell 1.3 GHz elliptical cavities, with helium gas return pipe absent
4. bare 325 MHz single-spoke resonator SSR1
5. bare 325 MHz single-spoke resonator SSR2 (preliminary design)
6. bare 325 MHz triple-spoke resonator TSR (preliminary design)

Illustrations of these cavities are shown in Figs. 1-6. The mechanical properties obtained from I-Deas or Superfish simulation are shown in Table 1. The RF properties for these cavities, obtained from Superfish or other RF simulations, are given in Table 2.

3. Preliminary Safety Requirements

3.1. Cryogenic Safety

VTS2&3 shall be designed with the same venting provisions as for VTS1, namely that the helium pressure vessel relief system must be sized for a maximum allowable working pressure (MAWP) of 80 psig. The cryogenic safety aspects of VTS1 have been studied carefully and approved for the 1.3 GHz 9-cell, 1.3 GHz single-cell, and SSR1 cases [1]. As with the existing VCTF, upgrades to the VCTF must pass the cryogenic safety review required by FESHM Chapter 5032 [2]; we make some preliminary remarks related to new cavities and configurations here as they relate to specifying functional requirements for the new cryostats.

The helium dewar venting analysis [1,3] shows that worst-case venting happens through the loss of cavity vacuum to air, which is only possible during a breach of the cavity vacuum system during active pumping. A larger cavity surface area leads to proportionally higher helium flow rates. For a cavity connected to the cavity vacuum pumping system, the maximum cavity surface area (with vacuum on one side and helium on the other) which can

be accommodated with the venting system is about 17500 cm^2. A cavity or cavities with total surface area larger than 17500 cm^2, e.g., TSR, must be tested with the cavity vacuum valved off and disconnected from the cavity vacuum pumping system.

All test cavities must be fitted with a rupture disk in the cavity vacuum space. If helium or air leaks into the cavity while it's submerged in liquid helium and expands during fastest reasonable cryostat warmup, the cavity venting analysis [1,3] shows that a test cavity will be protected by using any size piping sufficient for cavity pumping and a 25 psi, ½" inner-diameter rupture disk. This is not a personnel hazard, since the cavity remains inside the helium pressure vessel until warm-up is complete; and the primary concern would be to avoid cavity damage.

Analysis of the dressed 1.3 GHz 9-cell cavity [4] shows that the helium vessel never sees more than 1 atm differential pressure and thus need not be considered a pressure vessel. Therefore, its safety requirements are very similar to those for a bare 1.3 GHz 9-cell cavity.

3.2. Radiation Safety

The VCTF radiation shielding must maintain the "controlled area" status in IB1. For VTS1, the radiation shielding was designed for a 9-cell elliptical cavity tested with the cavity acceleration axis in a vertical orientation. This radiation shielding has been studied, approved, and found operationally to satisfy the shielding requirements for the 1.3 GHz 9-cell [5], 1.3 GHz single-cell [6], and SSR1 [7] configurations. The shielding requirements for VTS2&3, allowing for new cavities and configurations, will also have to be carefully studied and approved. We make some preliminary remarks here as they relate to specifying functional requirements for the new cryostats. Note that all cavity configurations are radiation monitored and the RF interlocked, and that new configurations undergo additional radiation monitoring during initial tests.

The single-spoke resonators (SSR1) are tested in VTS1 with the acceleration axis horizontal, i.e., perpendicular to that for which the internal shielding plug was designed, and nevertheless the shielding was found to be acceptable. For VTS2&3, all three spoke cavities can be mounted with their acceleration axis vertical, so that generated radiation is more likely to be absorbed in the internal shielding plug. Since all have smaller possible maximum field-emitted electron energy, with very conservative assumptions, it seems likely that a radiation shielding design for VTS2&3 which is similar to that for VTS1 will be adequate.

While the radiation shielding requirements for testing multiple 9-cell 1.3 GHz cavities have not yet been established, a conservative estimate using the approved shielding calculations for the existing shielding has been made, and it seems likely that a simple extension of the existing radiation shielding will be adequate.

4. Typical Cavity Test Requirements

A cavity vertical test consists of measurement at the operating temperature given in Table 2 of the Q_0 factor, as a function of cavity gradient (E_{acc}), to highest achievable gradient until the cavity performance limits the test. Additionally measurements of the TM010 passband modes (for 9-cell cavities), the investigation and processing of field emitters if necessary, and studies of the cavity limitation(s) must be accommodated. A typical Q_0 vs. E_{acc} test is expected to take about four hours. In addition, for some cavities, the Q_0 will be measured at low gradient during cooldown to 1.8K (or lower if possible and practical) to measure the cavity residual resistance.

The cryogenic capacity shall be capable of supporting tests which dissipate heat into the helium bath according to the typical examples shown for the single-spoke resonator SSR1-02 in Fig.7, and for the 9-cell ILC-style cavity TB9ACC012 in Fig.8. Heat dissipation of the SSR2 and TSR may be estimated by scaling up the heat dissipation of SSR1 according to the power dissipation in Table 2. Spoke resonators must be tested over their full Q_0 vs. E_{acc} range at 2K; it is acceptable to perform multipacting studies or field emitter processing at 4.5K, if needed. The duration of some CW tests may be limited by available helium in the dewar; and a pause to refill is acceptable.

In the range of 4.5K and below, the temperature must be measured with accuracy better than 50 mK, and stably regulated to within 100 mK over the course of a Q_0 vs. E_{acc} test with minimal stabilization wait time.

The magnetic shielding is required to attenuate the magnetic field at the cavity surface to <10 mG for 1.3 GHz cavities and <20 mG for 325 MHz cavities. This requirement is intended to keep the residual resistance due to the trapped magnetic flux in surface defects or impurities below ~10 nOhm.

Provisions must be made for RF cable connections to the cavities through the cryostat top plate assembly. Each 9-cell cavity requires four RF cables: one RF input cable, one transmitted power cable, and two HOM cables. Each single-cell or spoke cavity requires two RF cables: one RF input cable and one transmitted power cable. Provisions for RF cables for up to six 9-cell cavities shall be made.

Provisions must be made for active cavity vacuum pumping through the top plate assembly. A single pumping line with two connection ports (top and bottom) must be available. However, during high-throughput tests, or tests in which the cavity surface area exceeds the maximum which can be accommodated by the venting system (see Section 3), the cavity vacuum will not be actively pumped.

Provisions must be made for cavity diagnostic instrumentation connections for up to two cavities. The diagnostic instrumentation for a cavity test will vary depending on the individual cavity or study; however a minimum of 32 Cernox sensors (128 lines), i.e., 16 sensors per cavity, in the Fast Thermometry (or equivalent) system and 16 second-sound sensors (32 lines), i.e., 8 sensors per cavity, must be available for each R&D test. In addition, provisions for diode thermometry and other R&D diagnostic instrumentation such as x-ray sensors, etc., must be made (200 lines). The additional thermometers and other sensors required to ensure the cryostat is providing proper test conditions are not included in this list.

During production-style tests, defined as those tests in which test throughput is to be maximized, the residual resistance measurement during cooldown and the passband mode measurements shall be omitted, and cavity diagnostic instrumentation shall be limited to that which is required to ensure proper cavity test conditions. Such production-style Q_0 vs. E_{acc} -only tests are expected to take approximately one hour per cavity. Only production-style tests shall be possible when a cryostat is populated with more than two cavities.

Throughput Requirements and Timescale

The anticipated vertical test throughput requirements [8] for the Fermilab Vertical Cavity Test Facility (VCTF) are based on an R&D phase and a Project X production phase. The projected annual cavity tests required in the Americas region during the R&D phase is shown in Table 3, and is about 70 per year over the time period 2009-2012. The projected annual cavity tests required in the Americas during the production phase 2013-2015 is shown in Table 4, and is approximately 200 per year. Fermilab is assumed to perform about half of the vertical tests of the 9-cell ILC-style cavities for the Americas region, and all of the spoke cavities and 1-cells ILC-style cavities listed. Please note that these numbers do not include re-tests required because of equipment failure, additional diagnostic tests required to understand cavity performance, or the additional R&D tests expected to continue at a reduced level into the production phase, and shall be understood as a minimum number of tests required. A test configuration of six 9-cell cavities per cryostat shall be implemented as a design decision, reflecting our best estimate of the requirement for peak capacity for production-style tests.

The VCTF throughput with a single cryostat (VTS-1) was estimated to be approximately 48 per year [9]. The actual FY08/FY09 throughput, achieved under ideal conditions, is shown in Fig.9. A cryogenic upgrade and two additional cryostats were proposed to increase the VCTF throughput substantially [9]. For that analysis, the number of cavities per cryostat was assumed to be two, and the number of cryostats was assumed to be three. A VTS2 operational by Dec. 2010 and a VTS3 operational by Sep. 2011 would satisfy the Fermilab portion of the projected requirements shown in Tables 3 and 4 well. The throughput projections assuming upgrades with these dates are shown in Fig.10 [10].

5. Fundamental limitations to the VTS2&3 cryostats

The maximum vertical length of the complete cavity test insert is set by the crane hook height, and is 183" from the bottom of the cryostat top plate to the IB1 finished floor elevation. The maximum diameter of the test insert is set by civil construction requirements on the maximum pit diameter (60"), and then by the cryostat components including provision for internal magnetic shielding. The maximum diameter of the test insert is 34". For operational simplicity, we require VTS2 and VTS3 to have a common design.

6. Conclusions

Given the test requirements and the facility constraints listed above, the VTS 2 or VTS 3 shall be designed to accommodate the following cavity configurations:

1. Up to two of any combination of the following:
   a. (bare) 1-cell cavities,
   b. bare 9-cell cavities,
   c. dressed 9-cell cavities
   d. SSR1
2. Six bare 9-cell cavities, with the cavity vacuum of each sealed with rupture disk
3. One bare SSR2 (preliminary design)
4. One bare TSR (preliminary design), with the cavity vacuum sealed with rupture disk

Additional cavity configurations may be possible with further study; however they are not considered part of the baseline VTS2&3 functional requirements.

7. Acknowledgements

Jeff Brandt, Ruben Carcagno, Ivan Gonin, Don Mitchell, Joe Ozelis, Tom Peterson, Igor Rakhno, Clark Reid, Leonardo Ristori, Allan Rowe, Cosmore Sylvester, Bob Wagner, and Mayling Wong contributed data, figures, and other information for this document.

8. References

[1] Updated venting analyses for VTS helium dewar and cavity vacuum space, T. Peterson. http://tiweb.fnal.gov/website/controller/194(document), http://tiweb.fnal.gov/website/controller/193(spreadsheet).

[2] Fermilab Environment Safety and Health Manual (FESHM) http://www-esh.fnal.gov/pls/default/esh_home_page.page?this_page=800.

[3] VTS-1 Cavity Vacuum Engineering Note, M. Wong, http://tiweb.fnal.gov/website/controller/1176.

[4] Addendum for VTS venting analyses: venting of a dressed cavity in VTS, T. Peterson. http://tiweb.fnal.gov/website/controller/561 (document), http://tiweb.fnal.gov/website/controller/562 (spreadsheet).

[5] "Radiation Shielding Study for Superconducting RF Cavity Test Facility at Fermilab," I. Rakhno, Fermilab-TM-2350-AD, http://lss.fnal.gov/archive/test-tm/2000/fermilab-tm-2350-ad.pdf , ibid., Fermilab-TM-2367-AD, http://lss.fnal.gov/archive/test-tm/2000/fermilab-2m-2367-ad.pdf .

[6] Radiation Shielding Study for Testing Two Single-Cell Cavities in VCTF, I. Rakhno and C.M. Ginsburg, http://tiweb.fnal.gov/website/controller/519.

[7] Estimate of X-Ray Shielding and Radiation Monitoring for Safe Operation of the HINS Cavity Test Cave in the Meson Detector Building," B. Webber, http://beamdocs.fnal.gov/AD-public/DocDB/ShowDocument?docid=2598 ; Updates of HINS/Meson Detector Building radiation shielding assessment for VCTF, B. Webber, http://tiweb.fnal.gov/website/controller/141 .

[8] DOE/SRF Review, 18 May 2009, A. Rowe, http://indico.fnal.gov/materialDisplay.py?contribId=6&sessionId=1&materialId=slides&confId=2562

[9] ILCTA_IB1 Infrastructure for Vertical RF Cavity Tests, Dec. 18, 2006, R. Carcagno, C.M. Ginsburg, and C. Sylvester http://mtfpc49.fnal.gov/website/controller/441.

[10] DOE/SRF Review, 18 May 2009, C.M. Ginsburg, http://indico.fnal.gov/getFile.py/access?contribId=7&sessionId=1&resId=0&materialId=slides&confId=2562

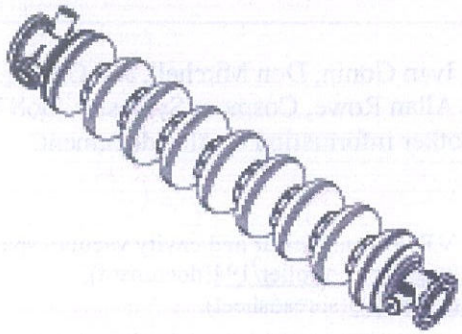

Figure 1: A standard 1.3 GHz 9-cell cavity.

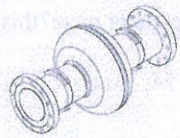

Figure 2: A standard 1.3 GHz single-cell cavity.

Figure 3: A dressed 1.3 GHz 9-cell cavity. As shown in the drawing, the helium gas return pipe is not present during a test.

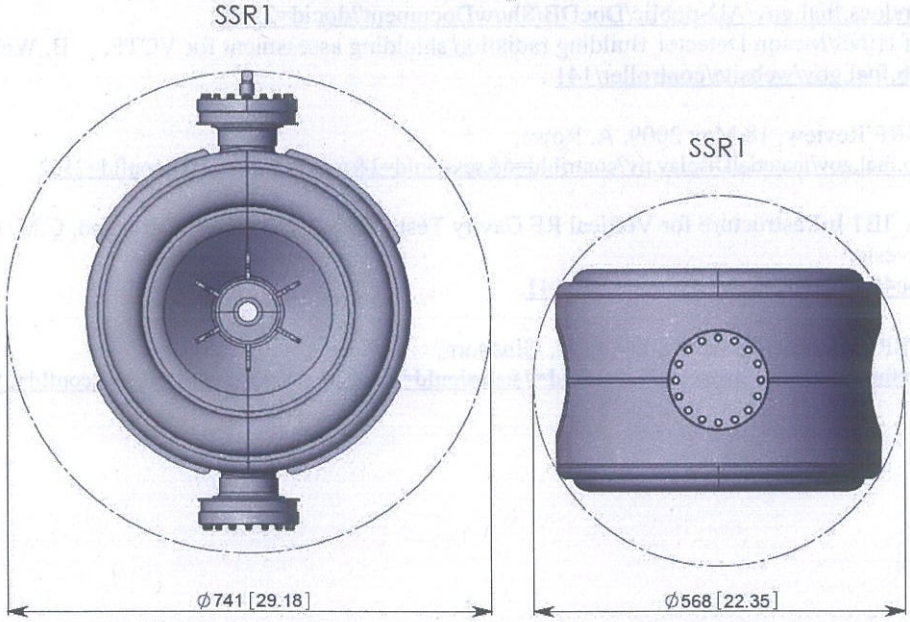

Figure 4: A 325 MHz SSR1 cavity. Dimensions are in mm [in]. The beam axis is perpendicular to the page (left) or vertical (right).

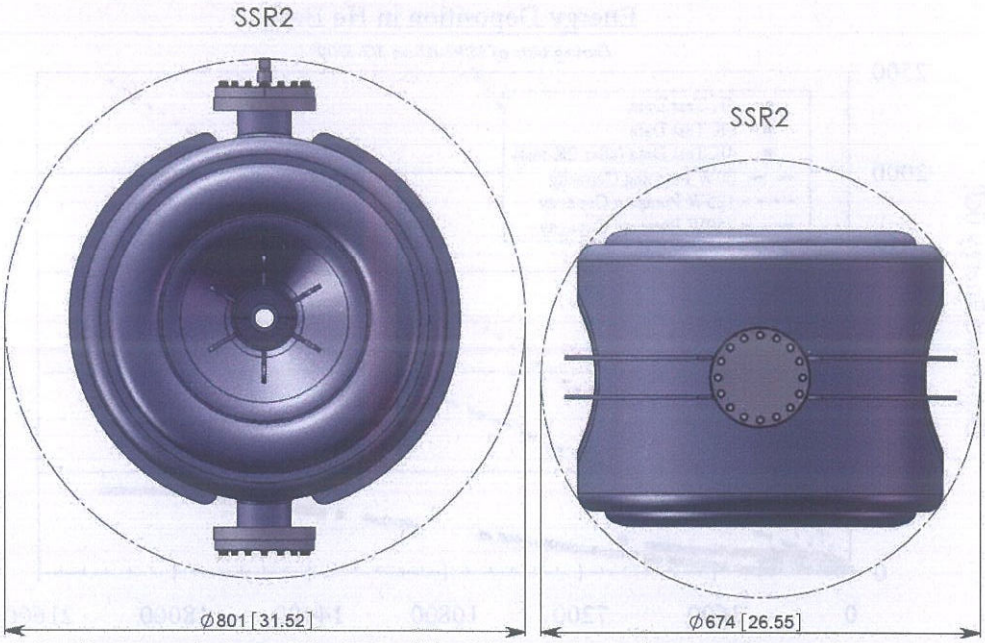

Figure 5: Preliminary design of the 325 MHz SSR2. Dimensions are in mm [in]. The beam axis is perpendicular to the page (left) or vertical (right).

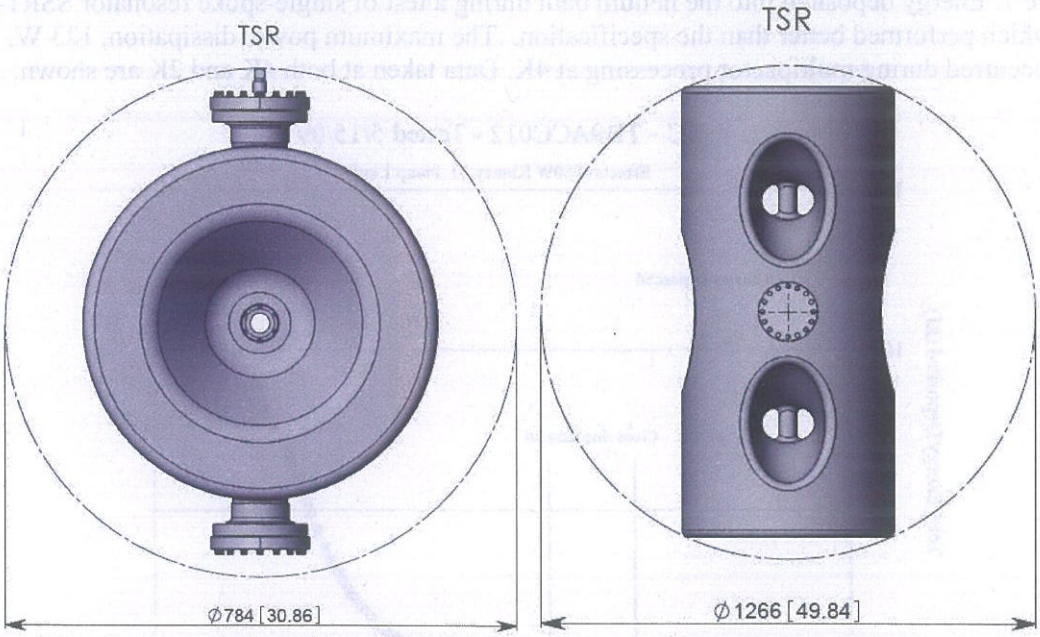

Figure 6: Preliminary design of the 325 MHz TSR. Dimensions are in mm [in]. The beam axis is perpendicular to the page (left) or vertical (right).

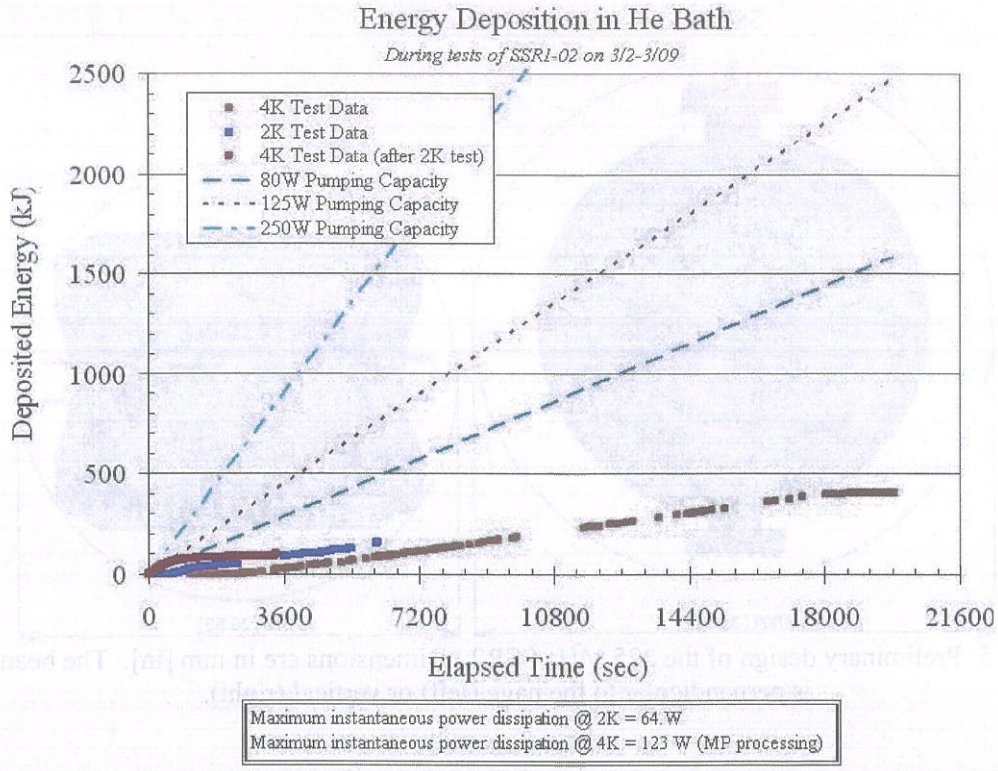

Figure 7: Energy deposited into the helium bath during a test of single-spoke resonator SSR1-02, which performed better than the specification. The maximum power dissipation, 123 W, occurred during multipactor processing at 4K. Data taken at both 4K and 2K are shown.

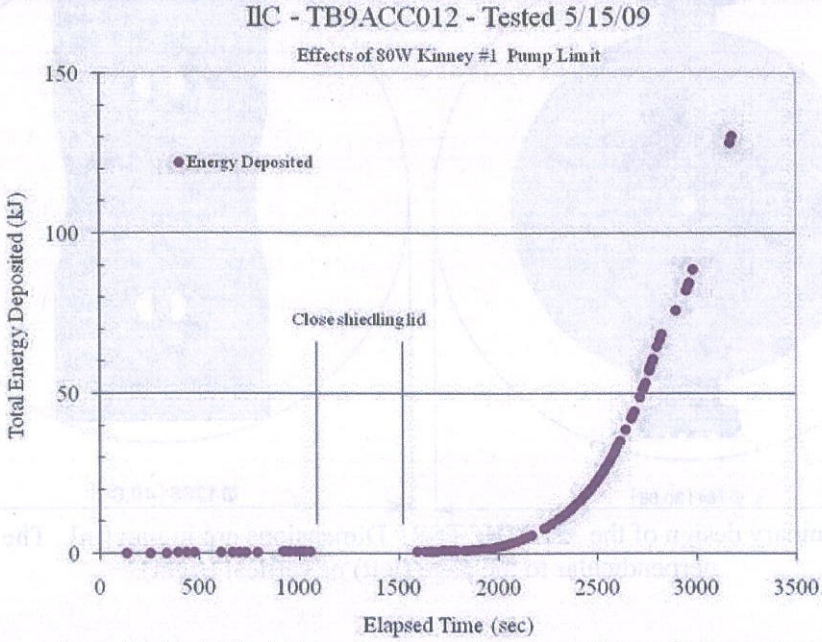

Figure 8: Energy deposited into the helium bath as a function of time during a test at 2K of 9-cell ILC-style cavity TB9ACC012, which performed better than the specification. The maximum power dissipation, 224 W, occurred at the maximum gradient, E_{acc}(max)= 39 MV/m.

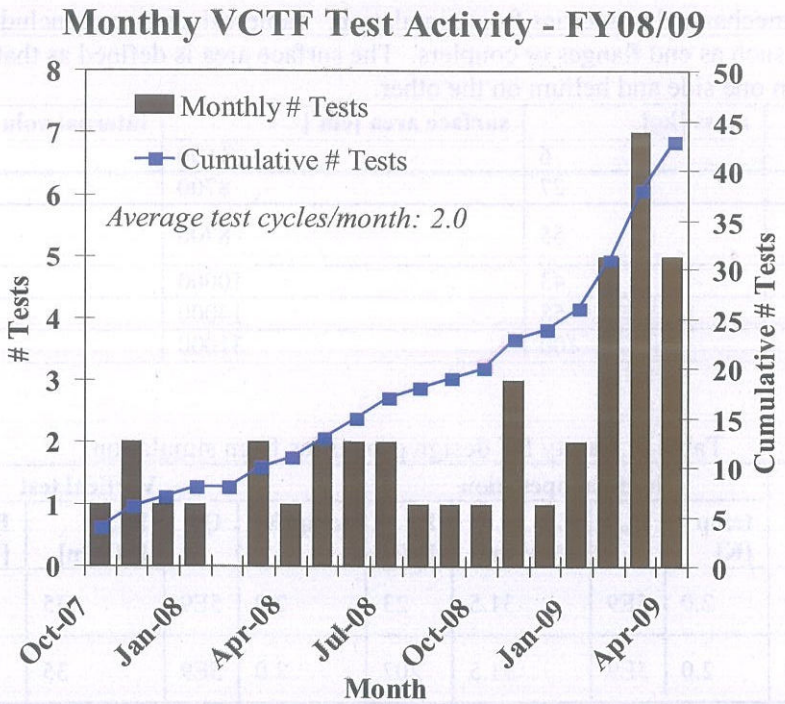

Figure 9: The VCTF cavity test throughput per month for Oct.2007-Apr.2009. The throughput goal of 48 cavity tests per year has been achieved short-term under ideal conditions.

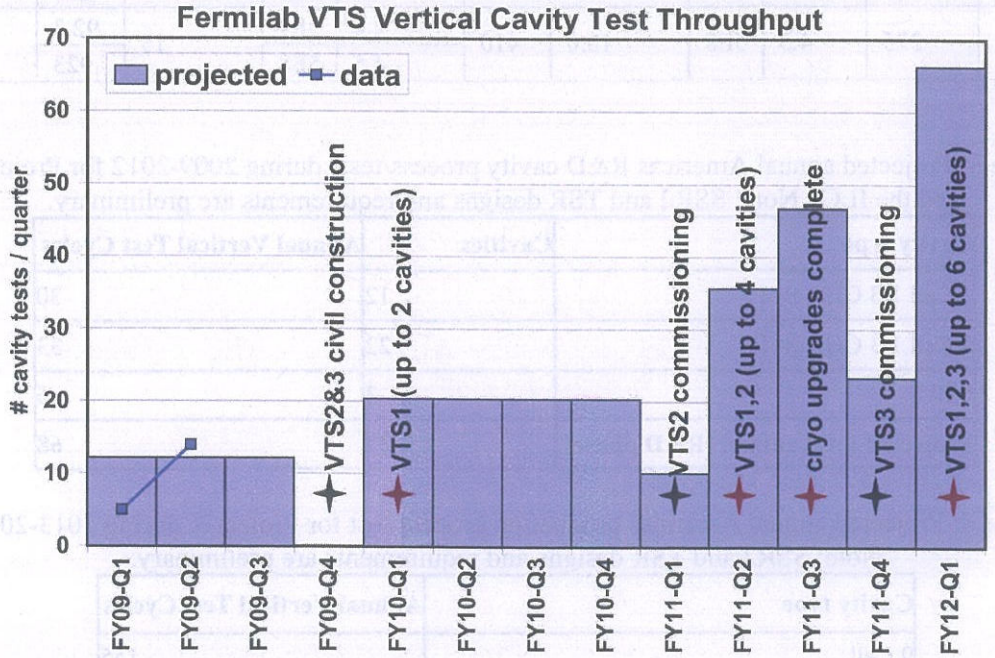

Figure 10: The projected number of cavity tests per quarter, assuming the completion of the planned cryogenic system upgrades and the addition of two cryostats, on the timescale shown.

Table 1: Cavity mechanical properties from simulation. Table values do not include associated cavity hardware such as end flanges or couplers. The surface area is defined as that which has cavity vacuum on one side and helium on the other.

cavity type	mass [kg]	surface area [cm^2]	internal volume [ℓ]
Bare 1-cell ILC	6	1600	3.9
Bare 9-cell ILC	27	8700	24
Dressed 9-cell ILC	55	8700	24
Bare SSR1	43	10000	48
Bare SSR2	58	14000	86
Bare TSR	100	31000	200

Table 2: Cavity RF design properties from simulation.

cavity type	f [MHz]	Nominal operation				Vertical test				
		temp [K]	Q_0	E_{acc} [MV/m]	P_d [W]	temp[K]	Q_0	E_{acc} [MV/m]	P_d [W]	E_e^{max} [MeV]
1-cell ILC	1300	2.0	5E9	31.5	23	2.0	5E9	35	28	35*0.12 =4.2
9-cell ILC	1300	2.0	5E9	31.5	207	2.0	5E9	35	250	35*1.038 =36
SSR1	325	4.5	5E8	10.0	16	2.0	5E9	15	3.6	15*0.135 =2.0
						4.5	5E8		36	
SSR2	325	4.5	5E8	10.0	90	2.0	5E9	15	20.3	15*0.246 =3.7
						4.5	5E8		203	
TSR	325	4.5	5E8	10.0	410	2.0	5E9	15	92.3	15*0.953 =14.3
						4.5	5E8		923	

Table 3: Projected annual Americas R&D cavity process/tests during 2009-2012 for Project X and the ILC. Note: SSR2 and TSR designs and requirements are preliminary.

Cavity type	Cavities	Annual Vertical Test Cycles
1 Cell 1.3 GHz, β=1	12	30
9 Cell 1.3 GHz, β=1	22	33
SSR1	3	5
Projected total annual (R&D phase)	**37**	**68**

Table 4: Projected annual Americas production process/test for Project X during 2013-2015. Note: SSR2 and TSR designs and requirements are preliminary.

Cavity type	Annual Vertical Test Cycles
9 Cell	155
SSR1, SSR2, TSR	40
Projected total annual (production phase)	**195**