TD-05-009 // 5500-ES-371014

Fermi National Accelerator Laboratory
Technical Division
Development and Test Department
Mail stop 316
P.O. Box 500
Batavia, Illinois • 60510

January 27, 2005

BTeV C0 IR Quadrupole Magnet
Inner and Outer Cable Manufacturing Specification

G. Ambrosio, D. Chichili, G. Kobliska, J.C. Tompkins, J. Zweibohmer

Abstract:

This note contains the specification of the inner and outer cable for the BTeV C0 IR Quadrupole Magnets.
This specification was part of a package consisting of: Inner and Outer Cable Manufacturing Specification (5500-ES-371014), Inner Strand Specification (5500-ES-371009), Outer Strand Specification (5500-ES-371010), Niobium Titanium Alloy Bars and Rods Specification (5500-ES-371015), and Niobium Barrier Material (Reactor Grade I) Specification (5500-ES-371016). All specifications were completed by the end of January 2004, a few days before the BTeV project was cancelled. The cable required for the BTeV C0 IR Quadrupole Magnets was identical to the cable used in the LHC IR Quadrupole Magnet, whose specifications were a mix of original and re-used SSC specifications, with some complications due to this mixed status. The specifications for the conductor to be used in the BTeV IR quadrupoles were originated by modifying the specifications for the LHC IR quadrupoles aiming at a complete and smaller set of documents without redundancy and contradictions, and with updated requirements for quality control. A major modification was introduced in the procurement strategy by procuring the cable (instead of strands and cabling separately) in order to have the vendor fully responsible for all characteristics of the final cable including its mechanical stability (a test was added to specify this characteristic).
The authors are thankful to Ron Scanlan, Luc-Rene' Oberli and Arup Ghosh for their help during the generation of these specifications.

Fermilab

BTeV C0 IR Quadrupole Magnet
Inner and Outer Cable Manufacturing Specification

Spec #: 5500-ES-371014

January 27, 2005

The low beta quadrupoles for the BTeV C0 IR employ a two-layer design with different cable parameters and superconducting strand in each layer. The magnetic design of the BTeV low beta quadrupoles is based on that of the LHC IR quadrupoles currently being fabricated at Fermilab, differing only in the details of the iron yoke; the outer diameter of the yoke is smaller and there are differences in bus and flow passageways. The collared coil assembly is identical to that of the LHC IR quadrupoles, and the cable and strand specifications are similar to the specifications for the LHC IR quadrupoles.

The strand specifications for the BTeV C0 IR quadrupole magnets are:

- Inner strand: 5500-ES-371009
- Outer strand: 5500-ES-371010

CONTENTS

1 SCOPE 5
1.1 Cable definition 5
2 REFERENCE DOCUMENTS 5
3 REQUIREMENTS 5
3.1 Technical requirements for strands 5
3.2 Technical requirements for cable 6
3.2.1 Mechanical properties 6
3.2.2 Electrical properties 7
3.3 Processing 8
3.3.1 Cable manufacturing 8
3.3.2 Cable dimensions 8
3.3.3 Identification 8
3.3.4 Cable Map 8
3.3.5 Cable production lengths 8
3.3.6 Strand Welds 9
3.3.7 Cable surface condition 9
3.3.8 Crossover or broken strands 9
3.3.9 Sharp edges 9
3.3.10 Degradation during cabling 9
3.3.11 Annealing 9
3.3.12 Reels/Spools 9
3.3.13 Spooling requirements 9
4 QUALITY ASSURANCE AND MANUFACTURING PLAN 10
4.1 Quality Control Plan 10
4.2 Manufacturing plan 11
4.3 Certificate of compliance 11
4.3.1 Nonconforming material 11
4.4 Submission of test samples 11
5 SHIPPING AND IDENTIFICATION REQUIREMENT 12
Appendix I - Procedure for the Measurement of Cable Dimensions 13
I.1 Cable dimensions 13
I.2 Calibration of the Cable Measuring Machine and gauge checks 13
I.3 Checks at the beginning of the run 13
I.4 Checks at the end of the run 13
Appendix II - Mechanical Tests 15
Appendix III - Cable Critical Current Determination 16
III.1 Introduction 16
III.2 Definition of Critical Current 16
III.3 Sample Mounting 17
III.4 Electrical Instrumentation 18
III.5 Measurement Procedure 18
III.6 Temperature Calculation 19
III.7 Magnetic Field Correction 19
III.8 Critical Current of the Thin Edge: 20
Appendix IV - Cable R(295) and RRR Determination 21
Appendix V - Cable Sharp Edge 22
Appendix VI - Measurement of Degradation During Cabling 23
Appendix VII - Packaging and shipping of Superconducting Cable 24

1 SCOPE

This specification establishes the requirements for the fabrication, inspection, test, identification and delivery of superconducting NbTi cable for Fermilab BTeV C0 IR quadrupole magnets.

1.1 Cable definition

The cable is composed of superconducting strands, which are twisted around a hollow core and pressed into a keystoned shape. Two types of cable are required, one for the inner coils and one for the outer coils.

2 REFERENCE DOCUMENTS

The following documents form a part of this specification to the extent specified herein:

5520-MA-439043	BTeV C0 IR Quadrupole Magnet Inner Bare Cable drawing
5520-MA-439044	BTeV C0 IR Quadrupole Magnet Outer Bare Cable drawing
5500-ES-371009	BTeV C0 IR Quadrupole Magnet Inner Strand Specification
5500-ES-371010	BTeV C0 IR Quadrupole Magnet Outer Strand Specification

3 REQUIREMENTS

3.1 Technical requirements for strands

The strands should be fabricated according to specifications 5500-ES-371009 (inner strand) or 5500-ES-371010 (outer strand) and approved for cabling by the Fermilab Subcontract Administrator.

The strand awaiting cable fabrication shall be identified, protected, and handled in a manner to prevent degradation or damage.

Some strand specifications are summarized in the following and in Table 1 (for reference).

1. Critical current. The strands for the inner layer shall have a minimum critical current of 378 A, measured at 7 T and 4.22 K. The strands for the outer layer shall have a minimum critical current of 185 A, measured at 7 T and 4.22 K. The critical current will be determined according to a criterion of $\rho=10^{-14}$ Ωm, based on the strand cross section area and with the applied magnetic field perpendicular to the strand axis.

2. Copper to superconductor ratio. The copper to superconductor ratio shall be (1.3±0.1):1 for the inner layer strand and (1.8±0.1):1 for the outer layer strand.

3. Strand diameter. The strand for the inner layer shall have a diameter of 0.808 ± 0.0025 mm. The strand for the outer layer shall have a diameter of 0.648 ± 0.0025 mm.

4. Surface condition. The strand surface shall be free of all surface defects, slivers, folds, laminations, dirt, copper fines, or inclusions. No NbTi filaments shall be visible at 10x magnification under a lighting level of at least 1076 lux.
5. Strand twist pitch. The strands for the cables for the BTeV C0-IR quads shall be twisted so that the filaments follow the opposite rotation as the cable lay direction. The inner layer strand twist pitch at final size shall be (13 ±1.5) mm. The outer layer strand twist pitch at final size shall be (13 ±1.5) mm.
6. Residual Resistance Ratio (RRR). The strands for inner and outer cable shall have a minimum RRR value of 70.
7. The strand shall survive a sharp bend test, performed in accordance with specification 5500-ES-371009 (inner strand) or 5500-ES-371010 (outer strand) without any sign of cracking at the outside surface of the sharp bend visible at 5x magnification under a lighting level of at least 1076 lux. Filament damage in excess of 1% of the design total number of filaments is cause for rejection.

Table 1. Strand mechanical and electrical specifications

Parameter	Unit	Inner cable		Outer cable	
		Value	Tolerance	Value	Tolerance
Diameter	mm	0.808	± 0.0025	0.648	± 0.0025
Cu/SC ratio		1.3 : 1	± 0.1	1.8 : 1	± 0.1
Surface coating		None	-	None	-
Anneal		None	-	None	-
Minimum critical current (at 4.22 K, 7 T)	A	378	-	185	-
Minimum RRR		70		70	
Twist direction		Left		Right	
Twist pitch	mm	13	± 1.5	13	± 1.5

3.2 Technical requirements for cable

Figure 1 shows the cable size parameters and Table 2 shows the cable mechanical and electrical parameters.

3.2.1 Mechanical properties

1. Cable size, strand number, cable transposition pitch, and lay direction are specified in Table 2. The cross sections of the inner and outer cable are shown in drawing numbers 5520-MA-439043 and 5520-MA-439044, respectively. The method for determining that the cable dimensions comply with the requirements are described in section 3.3.2 and Appendix I of this document. The cable mid-thickness is measured under a pressure of 5 kPsi (34.48 MPa).

   If the cable has a "right lay" pitch the strands should be spiraled in the same direction as right handed screw thread. The converse is true for a left lay direction.

2. The residual twist shall be less than 40 degree for the inner cable and less than 30 degree for the outer cable. The test should be performed according to Appendix II.
3. The cable shall pass tests of bending and mechanical stability performed according to Appendix II.

3.2.2 Electrical properties

Critical current at 7 T, 4.22 K must be higher than 14.0 kA and 8.5 kA for inner and outer cables, respectively. The conductors for inner and outer cable shall have a minimum residual resistance ratio (RRR) value of 70. The cable electrical properties are also described in Table 2. The methods used to measure the electrical properties are described in Appendix III and IV.

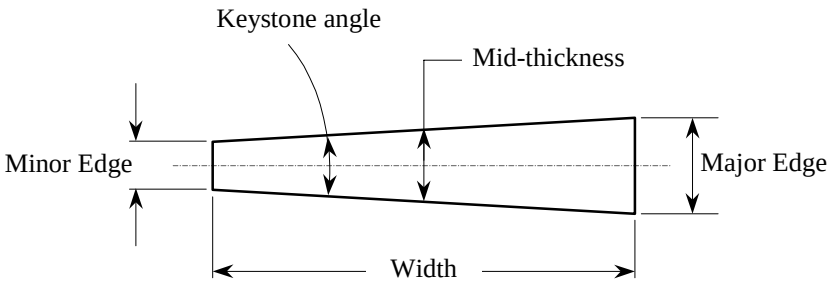

Figure 1 The cable size parameters.

Table 2. Cable mechanical and electrical specifications

Parameter	Unit	Inner cable		Outer cable	
		Value	Tolerance	Value	Tolerance
Number of strands		37	-	46	-
Cable width	mm	15.40	-0.02/+0	15.40	-0.025/+0.005
Minor edge	mm	1.320		1.051	
Cable Mid-thickness at 5 kPsi	mm	1.465	± 0.006	1.146	± 0.006
Major edge	mm	1.610		1.241	
Keystone angle	degree	1.079	± 0.05	0.707	± 0.05
Transposition length	mm	114	± 5	102	± 5
Lay direction		Right	-	Left	-
Minimum critical current (at 4.22 K, 7T)	kA	14.0	-	8.5	-
Residual resistance ratio		≥ 70		≥ 70	
Residual twist	degree	< 40		< 30	
Minimum bending radius	mm	7		15	

3.3 Processing

3.3.1 Cable manufacturing

The strands must be cabled on a high quality, fully controlled cabling machine, The Vendor must provide evidence that the proposed cabling machine is capable of fulfilling the stringent quality requirements of BTeV inner and outer cables. A Cabling Measuring Machine (CMM) should be installed on line with the cabling machine. The tension on the strands and on the cable during cabling must be measured and kept constant over the production.

3.3.2 Cable dimensions

The cable mid-thickness values given in Table 2 for a transverse pressure of 5 kPsi (34.48 MPa) are the nominal values of each cable mid-thickness. The mid-thickness of each cable at a pressure of 5 kPsi is verified by measuring the height of 10 samples (15 cm long) of each cable stacked with alternated positions in a ten-stack measuring fixture, the design of which, will be provided by Fermilab to the Vendor. The ten-stack measurement shall be performed at the beginning of each cabling run, to adjust the cable mid-thickness on the cabling machine. The cable width, keystone angle and the mid-thickness must be measured at 20 MPa during manufacturing and recorded at least every 3 m by a Cabling Measuring Machine (CMM). Further resizing shall not be accepted by Fermilab. The ten-stack measurements will be correlated to the values measured on the CMM during the cable manufacturing. The exact protocol for on-line dimensional measurements and their reporting must be agreed between the Fermilab Subcontract Administrator and the bidder before the contract is signed. Appendix I describes the calibration procedure currently foreseen for the measurement of the cable dimensions.

3.3.3 Identification

Each piece of strand and cable in the cable fabrication process shall be identified by a unique number code. Strand identification shall be traceable to the final cable serial number. All cable fabrication material, processing, inspection, tests, and delivery records shall be traceable and retrievable to either strand or cable code numbers.

3.3.4 Cable Map

The cable manufacturer shall supply a cable map giving the serial number of each reel of strand used in the cable. A copy of the cable map should be shipped with the cable.

3.3.5 Cable production lengths

The minimum unit length of cable is 536 m for the inner cable and 608 m for the outer cable (after cutting all samples required for tests). A cable production length is a continuous length of cable, which is longer than the minimum unit length with allowance for sample cutting. The maximum deliverable unit length for the inner and for the outer cable is specified in Section 5.

3.3.6 Strand Welds

No cold welds are allowed in any production length of cable. Cold welds used in setup must be clearly marked, and position of the cold welds must be listed in the production report. These cold welds must be removed before the cable is shipped to Fermilab.

3.3.7 Cable surface condition

The cable surface must be thoroughly clean and free from oil, metallic particles or residue. The cable shall be cleaned with Abzol VG cleaner, or alternative cleaner approved by the Fermilab Subcontract Administrator. The cable must be free of roughness, slivers and burrs.

3.3.8 Crossover or broken strands

There can be no crossovers of strands or broken strands in the cable

3.3.9 Sharp edges

The cable should have no sharp edges, as specified in Appendix V. The cable manufacturer shall take a digital photograph, with a magnification of 50x, of the cable thin edge at the beginning of each cabling run. This photo will be part of the quality control documentation and a digital copy should be provided to the Fermilab Subcontract Administrator.

3.3.10 Degradation during cabling

The cabling degradation, measured as specified in Appendix VI, should not exceed 5% for any strand. The cable manufacturer should measure at least three extracted strands per cable production length.

3.3.11 Annealing

There should be no annealing of the cable, and the strands to be used in the cable should not receive any annealing below 3.6 mm diameter.

3.3.12 Reels/Spools

The cable must be spooled with a radius larger than or equal to 177 mm. The spools must be constructed to prevent damage to the cable during spooling and unspooling. The spools shall be boxed to prevent damage in shipment. They should be stacked and shipped with the spool flanges maintained in a vertical orientation (axis horizontal) in order to prevent the cable from settling on the spool.

3.3.13 Spooling requirements

The cable must be wound on the spool so that there are no crossovers of the cable layers. Filler cord shall be used at the edges of the cable layers as required so that the cable will be adequately supported over the whole wide face and will lie flat. Only one production length of cable shall be placed on each spool. The cable will be wound onto a spool in the following manner: As an observer is looking at the collecting spool, if the spool is rotating clockwise, then the thick edge of the cable should be facing the observer.

4 QUALITY ASSURANCE AND MANUFACTURING PLAN

Prior to the contract being signed, the Vendor shall submit to the Fermilab Subcontract Administrator, for his/her approval, a documented Quality Assurance Plan, which fulfills all requirements described in the present specification. The Vendor shall also submit to the Fermilab Subcontract Administrator, for its approval, a detailed description of the test procedures and the model test certificates, which he proposes to use.

4.1 Quality Control Plan

The cable manufacturer is responsible for performing the inspections and the tests defined in Table 3 (with the exception of cable critical current and RRR), for the preparation and maintenance of resultant data and for the storage of all tested samples until end of the contract. At the end of the contract all samples shall be sent to Fermilab. The cable manufacturer shall label all samples used for tests and shall identify their position within the cable length from which they were taken.

Table 3. Finished cable acceptance inspection/test

Characteristic	Requirement value	Test Sample	Frequency	Test method
Cable mid-thickness	Table 2	Continuous measurement with a CMM at 5kPsi (34.48 MPa) and off-line check of mid-thickness with ten-stack measuring fixture; see 3.3.2 and Appendix I for details		
Cable width	Table 2			
Cable keystone angle	Table 2			
Cable lay direction	Table 2	Vendor Quality Control Plan		
Cable transposition length	Table 2	Vendor Quality Control Plan		
Bend test	No damage <1% broken filam.	Appendix II	Beginning and end of each production length	Appendix II
Mechanical stability	No strands out of the cable	Appendix II	Beginning and end of each production length	Appendix II
Residual twist	See 3.2.1.2	1 m	Beginning and end of each production length	Appendix II
Surface condition	See 3.3.7	100% of cable		Visual test
Crossovers or broken strands	None	100% of cable		Visual test
Sharp edges	See 3.3.9	See 3.3.9	Beginning of each production length	See 3.3.9
Cabling degradation	< 5 %	Extracted strands	Minimum of 3 samples per cable prod. length	Appendix VI
Cable critical current and RRR	Table 2	2 m	Beginning and end of each production length	Appendix III-IV

4.2 Manufacturing plan

Prior to contract being signed the Vendor shall establish and make available to the Fermilab Subcontract Administrator, for his/her information, a manufacturing plan describing the process and all tooling, machines and equipment. The implementation of any change to the manufacturing plan after the beginning of manufacturing is subject to prior written approval by the Fermilab Subcontract Administrator.

4.3 Certificate of compliance

The cable manufacturer shall provide a written statement certifying compliance with the requirements of this specification with each product shipment, together with a completed copy of all documentation including all test results and cable map. This documentation shall include all documents requested by this specification, and by the associated specifications for the strands (5500-ES-371009 or 5500-ES-371010), for NbTi bars and rods (5500-ES-371015), and for Nb barrier (5500-ES-371016) showing that all materials used in the deliverable cable are in compliance with the above specifications. All documentation is to be provided in an electronic form (format should be approved by the Fermilab Subcontract Administrator) also. This documentation shall be provided to the Fermilab Subcontract Administrator after the completion of all tests, measurements, and inspections. This documentation shall be sent prior to, or at the absolute latest, concurrently with the cable.

4.3.1 Nonconforming material

Finished cable failing to meet the requirements of Table 2 shall be identified by condition and segregated from conforming material. Material shall remain on hold pending notification to, and disposition by the Fermilab Subcontract Administrator.

4.4 Submission of test samples

Before shipping a cable spool to Fermilab, the Vendor must deliver to Fermilab a 2-m long sample taken from each end of the cable production length on that spool, and a 4-m long sample taken from one end of the cable production length on that spool. Sample identification must include the mention “pre-shipment test samples”, the data specified in Appendix VII section 1.2, and the position with respect to the cable during cabling (start or end of cabling run). These samples must be delivered to Fermilab <u>as soon as possible after cable manufacturing</u> and before cable shipment. The samples must be accompanied by the results of mechanical measurements made during cable fabrication and by a copy of the cable strand map. These samples will be used by Fermilab to verify the mechanical and electrical characteristics of the cable before the approval for the delivery of each cable spool. Fermilab will send to Brookhaven National Laboratory, for performing the cable critical current and RRR measurement, the 2-m long samples from the ends of each production length.

5 SHIPPING AND IDENTIFICATION REQUIREMENT

The maximum deliverable unit length per spool is 2400 m for the inner cable and 2800 m for the outer cable. If a cable production length is longer than the maximum deliverable unit length, then the cable manufacturer shall contact the Fermilab Subcontract Administrator in order to be told how to divide the production length into deliverable lengths. Each deliverable length shall be packaged and shipped as a single unit. Requirements for packaging, shipping and identification are specified in Appendix VII.

Appendix I - Procedure for the Measurement of Cable Dimensions

I.1 Cable dimensions

The Turks-head adjustments to produce the cable with the specified mid-thickness, have to be made using the results of the ten-stack measurement at 5 kPsi (34.48 MPa) as the reference value. The cable mid-thickness measured by the Cable Measuring Machine (CMM) are to be considered relative measurements to maintain the cable mid-thickness within the required tolerances.

The initial measurements of the cable width and keystone angle have to be made with the CMM calibrated using a certified reference standard gauge before each cable-manufacturing run.

I.2 Calibration of the Cable Measuring Machine and gauge checks

At the beginning of each cable-manufacturing run the CMM is to be calibrated using a certified, flat, reference gauge. This initial calibration is further checked using keystone angle gauges certified by Fermilab. The following test sequence is required to check the CMM calibration.

- Make a minimum of two measurements with the flat reference gauge
- Make a minimum of five measurements with the nominal keystone angle gauge
- Make a minimum of five measurements with the maximum keystone angle gauge

The angular measurements given by the CMM are expected to be within ± 0.01º of the keystone angle gauge.

I.3 Checks at the beginning of the run

At the beginning of each cable manufacturing run the cable mid-thickness value at 5 kPsi (34.48 MPa) is to be measured using the ten-stack fixture. Cable samples used for off-line tests of the cable dimensional and mechanical requirements ("hub" cable samples in the following) are to be taken just after having made the final Turks-head adjustments, giving the cable within the specified dimensional tolerance limits. At the start of production of the 2-m long "hub" cable sample for the ten-stack measurements, the CMM mid-thickness measurements are to be made at intervals of 30 cm. The average value of these measurements will be correlated to the mid-thickness value determined on the "hub" cable sample with the ten-stack fixture. Before starting the cabling run, a photo of the thin edge of the "hub" cable with a magnification of 50x will be taken and inspected to ensure the absence of sharp edges.

I.4 Checks at the end of the run

Normally, at the end of the cable-manufacturing run, the cable mid-thickness should be stable within 2 μm. The Vendor should ensure that this is the case. The cable mid-thickness value is to be checked, off-line, by a ten-stack measurement. During production of the 2-m long cable sample at the end of the cable-manufacturing run, the CMM mid-

thickness measurements are to be made at intervals of 30 cm. The average value of these measurements will be correlated to the mid-thickness value determined with the ten-stack fixture. At the end of the cable manufacturing run the CMM calibration is to be checked by carrying out a minimum of two measurements against the flat reference gauge.

Appendix II - Mechanical Tests

- **Residual twist**: The twist is measured by suspending a 11.34 Kg (25 lb.) weight from a 1m length of cable and measuring the difference in the angle between the cable surfaces at the top and the bottom of the sample.

- **Bend test**: The purpose of this test is to verify the absence of cracks and fractures after bending in order to ensure that the cable is suitable for coil winding. A cable sample 200-mm long is bent over a rod (the rod diameter for each cable is shown in Table 2) while applying a 32-Kg tensile load. The cable must keep its coherence after bending. The bent cable will be examined under a microscope with a magnification of at least 50x to determine if any strands are cracked or fractured near the cable edges. Subsequently, the bent area of the sample will be etched in nitric acid and examined for possible filament damage. Cables showing more than 1% broken filaments will not be accepted.

- **Mechanical stability test**: The cable sample for this test should be 135-cm long and should have both ends soldered (soldered part should be between 1 and 2 cm in length). The sample should be bent in order to make a coil of 26-cm diameter as shown in Figure II.1. The overlapping parts of the sample should be taped together at point A. No mandrel or any other support should be used during sample bending. The sample should be examined for strands popping out of the cable. A strand is defined "out of the cable" when, in any point, it is out of registration with the nominal cable surface by 40% or more of its diameter. In order to pass this test the cable should preserve its shape and no strands should be out of the cable after bending.

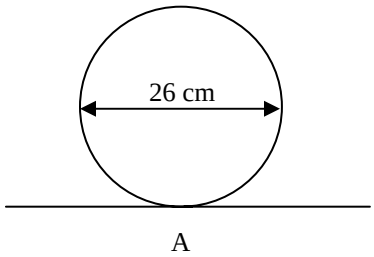

Figure II.1: Sample for cable stability test.

Appendix III - Cable Critical Current Determination

III.1 Introduction

The sections below describe the test method used at Brookhaven National Laboratory (BNL) to determine transport critical currents of meter long cable samples. These procedures have proven suitable for production testing. Fermilab will provide the samples.

The critical current of a cable, I_c, is less than the sum of the individual strand values as there is invariably some degradation during the fabrication of the cable. This is expressed as follows:

$$D = 1 - \left(\frac{I_c}{\sum I_{cw}} \right)$$

where ΣI_{cw} = sum of the Ic's of the strands in the cable. An allowance for degradation, is $D < 0.05$ (=5%).

The critical current is a function of temperature, T, and magnetic field, B. It is necessary to convert (or "correct") short sample test results obtained at particular values of T and B, to values corresponding to a standard temperature and field. The steps in this conversion are as follows:

a) Obtain raw data for several applied fields: I_{ct}, critical current at bath temperature, T, and applied field, B_a. For BTeV quadrupole cable, the applied fields are 6.7, 7.0, 7.3 T for inner cables, and 5.6, 6.3, 7.0 T for outer cable.

b) Calculate the peak field, B: the sum of the applied field and the self-field, due to the measurement current.

c) Convert I_{ct} at field B to I_c, the value corresponding to reference temperature T_{ref}.

d) Plot I_c vs. B and calculate I_c at the reference field from a linear fit to the data.

The calculations used in the above steps are described in detail below..

III.2 Definition of Critical Current

The critical current is a property of the reversible portion of the V-I curve. It is defined as that current for which

$$V/I = \frac{10^{-14}}{\left(\frac{N \pi d^2}{4} \right)}$$

where V = voltage drop per m, I = current in amps N = no. of strands in cable d = strand diameter in m. The shape of the V-I curve is of the form V = constant × I^{n+1}. (Note that n is defined from the equation ρ = constant × I^n). The quantity *n* is routinely measured as required by the specifications.

III.3 Sample Mounting

The samples are mounted in a compression fixture, which is illustrated in Figure III.1. The test arrangement involves four bare cable samples. As these are keystoned, (i.e., they are trapezoidal in cross-section), care is taken to alternate thick and thin edges so that pairs of conductors present parallel surfaces to the clamping faces. As indicated in Figure III.1 there are a series of separators: 0.76 mm. thick G-10 strips which carry electrical instrumentation described below, and 0.25 mm. thick Mylar strips which insulate adjacent samples of the upper and lower cable pairs.

Compression is applied by tightening 9.53 mm (3/8 in.) bolts. A torque of 53 N-m (240 inch-pounds) is used to tighten the bolts. This produces a clamping pressure of 54± 7 MPa for the 15 mm wide BTEV cables at room temperature. The standard configuration for quality control testing is the perpendicular one, i.e., the applied dipole field is perpendicular to the sample faces. Rotation of the sample fixture relative to the magnet is prevented by means of a locating key on the fixture and a slotted plate at the bottom of the magnet.

Figure III.2 shows schematically how the cables are connected to each other and to the gas cooled leads. The connections are made using ordinary soft solder over a 15 cm. length. A typical joint resistance is about 10^{-9} ohm. The samples are excited in pairs, either A-B, or C-D.

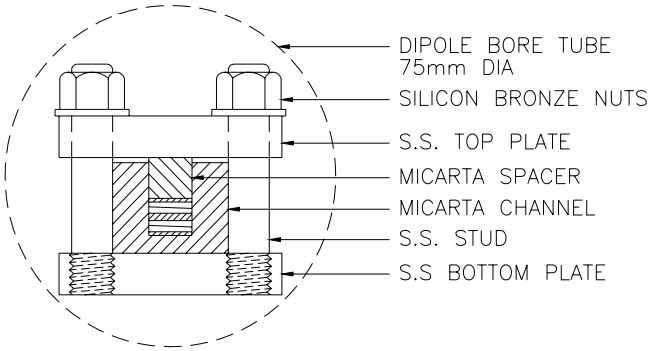

Figure III.1 Mechanical assembly of 2 pairs of cable.

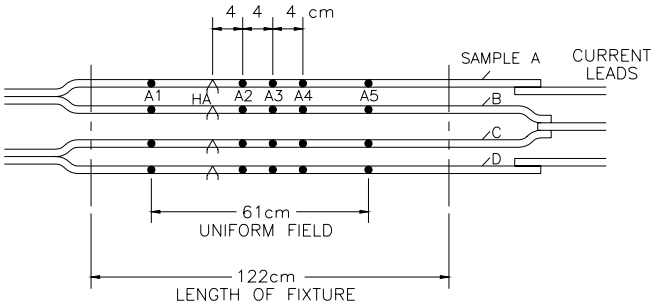

Figure III.2 Electrical Wiring Schematic.

III.4 Electrical Instrumentation

Primary instrumentation consists of the following:

- Five voltage taps and thin foil heater element for each sample. These are contained on the G-10 strips shown in Figure III.2. The voltage taps work by the pressure contact of a copper wire across the width of the sample. The heater element is a strip of stainless steel foil, 0.013 mm. thick x 3 mm. x 6 mm, which is located in a shallow well formed in the G-10 strip.
- Hazemeyer DCCT secondary current standard.
- Digital voltmeters, 6-1/2 digit, 0.1 μV sensitivity.
- Nicolet 12 bit, 4 channel digital oscilloscope.
- Two calibrated carbon resistor thermometers, located at each end of the magnet.
- Isolation preamplifiers, 1 mV noise level.

Secondary instrumentation consists of the following:

- Quench current protection circuits for the magnet, the gas-cooled leads, and the samples.
- DC power supplies for persistent switch, and sample heater element.
- Pulse power supply for sample heater element.

III.5 Measurement Procedure

The cable samples are energized in pairs, either A-B or C-D in Figure III.2 and the V-I curves are determined simultaneously for each member of the bifilar pair. In quality control tests of production cables, the match between samples is close enough that I_c's can usually be determined for all four samples. In the rest of this section we shall describe the procedure for testing one cable only, it being understood that a pair of samples, or all four, are under simultaneous test.

The measurements are made with the helium bath level above the upper sample and well above the top of the dipole magnet. The magnet field is set to a desired value and locked in with the persistent switch. The standard arrangement is such that the field is oriented perpendicular to the cable face.

The relative direction of the current flow and of the magnet field is very important for reasons which will be discussed below. Therefore, the polarity of the power supply connections is carefully checked. Before the V-I curve is measured the sample is trained. This is done by ramping the current until a quench occurs. For relatively high Cu/SC ratio cables, one quench is usually sufficient to reach the plateau value of I_q.

Voltage-current readings are taken with a current ramp of ~200A/s. On-line the V-I data are converted to log ρ - log I data and fitted by a straight line. This gives the 10^{-14} ohm · m current and the n-value (the slope of the log-log plot). However off-line a separate

analytical technique is used for calculating I_{ct} and n-value. The results of this analysis are reported: B_a, T, I_{ct} I_q, n, where B_a is the applied field, and I_q is the quench current or a lower limit of it. This procedure is repeated for each of the four cables at several fields in the vicinity of the specification field.

III.6 Temperature Calculation

Calculations of the critical currents at temperatures other than that at which I_c is measured are made using the same procedure as that for wires. The specification temperature is usually 4.222 K, that of boiling helium at standard atmospheric pressure. The bath temperature is recorded with the aid of cryogenic thermometry with a precision of ± 0.002K (2 mK). A "linear T" type of correction is applied for temperatures different from 4.222 K:

$$\frac{I_c}{I_{ct}} = \frac{T - 4.222}{T_c - T_{bath}}$$

$$T_c(B) = 9.2\left[1 - \frac{B}{14.5}\right]^{0.59}$$

where $T_c(B)$ is the transition temperature at the specified magnetic field. I_{ct} is the current measured at temperature T, and I_c is the critical current at the specification temperature. The field B is not just the applied field but that which takes into account the field produced by the cables as explained below.

III.7 Magnetic Field Correction[2]

The magnetic field is the sum of the applied field produced by the dipole magnet and the self-field produced by the measuring current. The following assumptions give results that are self-consistent for a wide variety of geometry and which give reliable predictions of magnet behavior.

a) The critical current of the sample is determined by the peak magnetic field. This depends, of course, on the orientation of the applied field and the direction of the sample current.

b) The sample current is distributed uniformly over, and normal to, the area of the trapezoid that encloses the cable cross-section.

c) The geometry is accurately reproducible; this is a matter of care in assembly.

With the dipole field perpendicular to the wide face of the sample, the peak field occurs at a point on the surface of the sample where the self-field and the applied field are very nearly parallel; that is, they are simply additive. For the standard test configuration, the self-field correction can be written:

$$B = B_{peak} = B_a + c \times I_{ct}$$

[2] " The effect of self field on the critical current determination of multifilamentary superconductors", M.Garber et.al., IEEE Trans. on Magnetics, Vol25, p1940 (1989)

where B_a = dipole field and c = geometric constant. Below is given the value of c for BTeV cable, for B_a perpendicular to the sample, and for the standard BNL test geometry in which the bifilar samples are separated by 0.25 mm

Self-field constant, c, T/kA, for BTeV Inner Cable: 0.02480

Self-field constant, c, T/kA, for BTeV Outer Cable: 0.02530

III.8 Critical Current of the Thin Edge:

The thin edge of a keystone-shaped cable is of interest. The bifilar sample test arrangement with applied field perpendicular has the characteristic feature that the peak fields occur at diagonally opposite points, at the two thin edges (c.f. Figure III.3). the quality control test determines the critical current for the thin edge; i.e. the field and current direction are oriented as in Figure III.3.

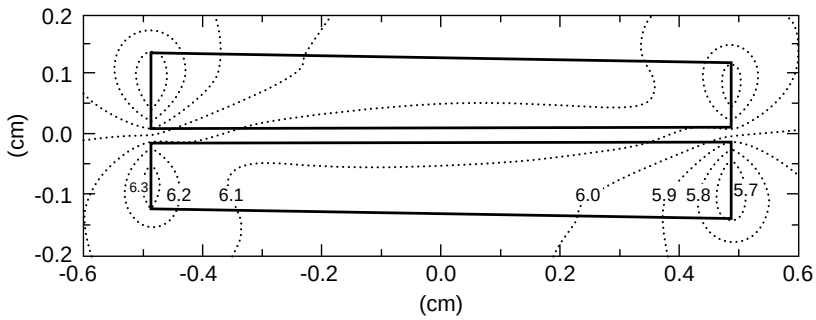

Figure III.3 Contours of constant field magnitude for perpendicular applied field of 6T and current of 10kA. The peak field of 6.4T occurs at the thin edge of the cable.

Appendix IV - Cable R(295) and RRR Determination

As in the case of wires, the cable resistance at 295 K and that at 10 K is determined using the same set-up used for Ic determination. The residual resistance ratio, RRR, is defined to be R(295)/R(10). R(295) is measured with an accuracy of 0.5%; R(10) is measured with an accuracy of 2%.

The room temperature measurement is made using a DC current of 1 A, and voltage contacts 61 cm apart (see Figure III.2). A thermocouple device of 0.1^0C accuracy is used to determine the ambient temperature. Normally occurring room temperature variations produce significant variations in the measured resistance. Designating this resistance as R_m and the ambient temperature as t(^{0}C), the resistance at the reference temperature of 295 K is calculated as follows:

$$R(295) = \frac{R_m}{1 + 0.0039(t - 22)}$$

The effect of the Nb-Ti is negligible for the purpose of this correction.

The low temperature measurement is a dynamic one, made by inducing a superconducting-normal state quench while the cable is carrying current. Referring to Figure III.2, a quench is triggered in Cable A, for example, by means of heater HA. The resulting waveform observed at nearby voltage taps, A2-A3 or A3-A4, consists of three parts: a superconducting state baseline voltage, a linear ramp voltage corresponding to the passage of the superconducting-normal interface between the voltage taps, and a slowly increasing signal characteristic of the normal state resistance. The latter increases in time due to normal state heating. However, at first the voltage is almost constant due to the residual resistance characteristic of the copper. Thus, there is a kink in the voltage waveform at the beginning and at the end of the linear ramp portion. The voltage difference between these two points equals the current times the residual resistance of the section of cable between the voltage taps. The resistance per centimeter is determined for two pairs of taps (A2-A3 and A3-A4 in the above illustration) and averaged. The taps are relatively close to the heater in order to minimize the effect of current fall-off which results from the increase of normal state resistance as the quench propagates. Routinely the resistance in zero field is measured.

Appendix V - Cable Sharp Edge

The cable should have no sharp edges. An edge is defined as sharp when the two flat surfaces of a strand, at a cable edge (see Figure V.1), are closer than 0.2 mm (inner cable) or 0.15 mm (outer cable). The cable manufacturer shall take a digital photograph, with a magnification of 50x, of the cable thin edge at the beginning of each cabling run. This photo will be part of the quality control documentation and a digital copy should be provided to the Fermilab Subcontract Administrator.

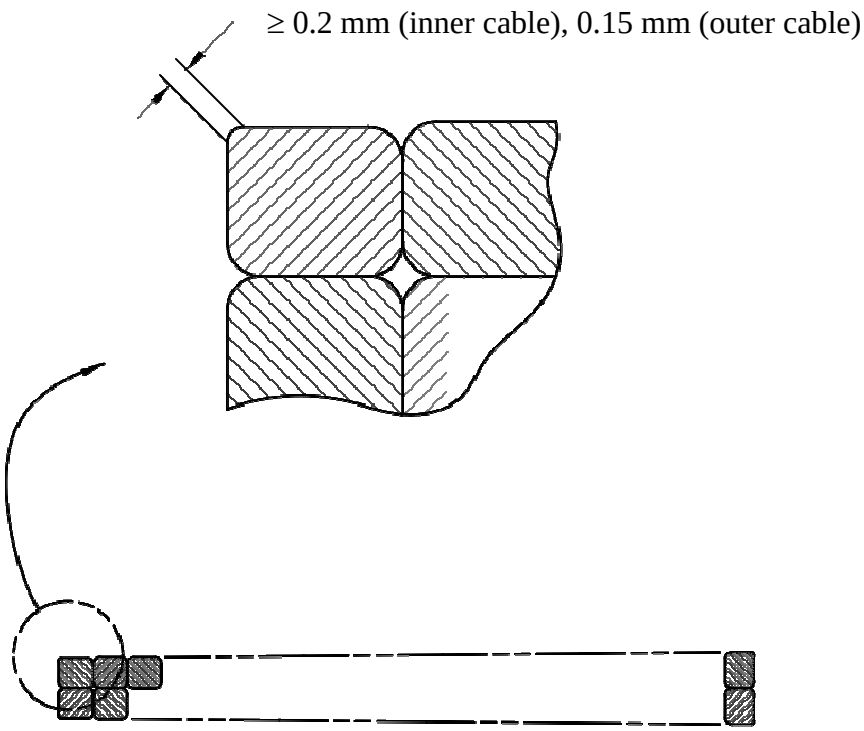

Figure V.1: Cable edge specification

Appendix VI - Measurement of Degradation During Cabling

Before shipping a cable production length to Fermilab, the Vendor should measure the critical currents of a minimum of three (3) strands extracted from that cable, and compare them with the critical currents of the same strands before cabling. The cabling degradation should not exceed 5%. To have a sufficient number of measurements for statistics, Fermilab requires that critical current measurement be performed on at least three extracted strands per cable production length. The strands should be selected in such a way that each billet entering each cable production length is tested. Short samples should be taken from one end of each cabling run, directly on the cabling machine where the identification is still possible. The cabling degradation will be computed by making critical current measurements at 6, 7 and 8 T and corrected to the reference temperature of 4.22 K as described in Appendix III. The above data must be reported to the Fermilab Subcontract Administrator before cable shipment.

Appendix VII - Packaging and shipping of Superconducting Cable

This appendix establishes the minimum requirements for the packaging and shipping of superconducting NbTi Cable. This cable will be used in the manufacture of the BTeV C0 IR quadrupole magnets.
The seller shall provide written request to the Fermilab Subcontract Administrator for any exceptions or deviations to the technical requirements prior to proceeding with implementation. Such implementation shall require written authorization by the Fermilab Subcontract Administrator.

1.0 REQUIREMENTS

1.1 Spools

The cable shall be shipped on spools, which have an inner radius larger than or equal to 177 mm, a 38.1 mm (1-1/2 inch) diameter center hole, a maximum outer diameter of 914 mm, and a maximum outside width of 457 mm. Rope filler is to be used as needed to ensure that cable lays flat on the reel so as to avoid any distortion to the cable caused by spooling, or by storage or transit. The spools shall be constructed to prevent damage to the cable during spooling, unspooling and shipment.

1.2 Marking/Identification Requirement

Spools and exterior packaging shall be identified with the following information in the order shown:

BTeV C0 IR Quadrupole Magnet	superconducting cable
Type (Inner or Outer)	I or O
Strand manufacturer	_____
Fermilab P.O. No.	_____
Reel ID.	_____
Drawing No.	_____
Length (m)	_____
Weight (kg)	_____
Cable Map No.	_____
Date of Manufacture	_____
Name of Manufacturer	_____

The Reel ID in the list should be in format of 'BTeV-I-S-Cxxxx.' 'I' means inner cable. In the case of outer cable this will be 'O.' The following 'S' indicates the strand manufacturer (use the first letter of the name of the strand manufacturer). The following 'C' indicates the cable manufacturer (use the first letter of the name of the cable manufacturer). The last field shows the four digits of the cable ID number.

1.3 Packaging

The cable should be packed in a manner that will protect it from any kind of damage that could occur in shipping from mishandling or exposure to the elements. As a minimum, the following is required:

1.3.1 The cable on the reel shall be wrapped with a layer of cardboard followed by a layer of sheet metal adequate to avoid any damage that could happen during shipping or while in storage.

1.3.2 Wrap cable with a layer of new, clean polyethylene having a minimum thickness of 1.5 mm (.06 inch). Hold with plastic banding straps.

1.3.3 Bag spool in 0.13 mm (5 mil.) polyethylene to protect the cable from dirt. Place a desiccant material in the bag to protect from moisture.

1.3.4 Production documentation and the cable certification documentation package should be placed in a water tight envelope and attached to the flange of the spool.

1.4 Shipping

The cable spool shall be shipped as a palletized unit.

1.4.1 Place the spool on a pallet custom made to the size of the spool, with the spool flanges maintained in a vertical orientation (axis horizontal) in order to prevent the cable from settling on the spool. (Custom pallets are reusable.)

1.4.2 Attach the spool to the pallet through the horizontal axis of the spool with banding material (palletized unit).

1.4.3 Cover the entire package with a 16 mm (5/8 inch) plywood crate banded to the pallet holding the plywood cover in place.

2.0 QUALITY ASSURANCE

2.1 Inspection and Compliance

The seller is responsible for the performance of all necessary inspections to assure conformance with section 1.

2.1.1 The inspection performed to meet the requirements of this specification shall be incorporated into the seller's quality system.

2.1.2 Each spool of cable shall be treated as a separate lot for the purpose of packaging inspections. Every lot of material must be examined prior to shipment for all of the characteristics mentioned in section 1 of this appendix (requirements).

2.2 Acceptance of Material

Fermilab reserves the right to reject any material not conforming to the requirements of this specification.