Mechanical Behavior of High Field Cosθ Dipole.

I. Novitski

Analysis of the mechanical stricture of 11T, 40mm aperture, 2 layers, Nb_3Sn dipole is presented. The goal of analysis is to review magnet mechanical behavior before finalization of a "shim plan" for magnet #5.
The analysis was carried out in following order:

1. Founding several acceptable solutions at 4K & B=11T,
2. Checking these variants at 4K & B=0T,
3. Verifying obtained versions at 300K

Information is presented in question-answer form and follows by logic of mentioned idea. All obtained results are summarized in several tables at the end of this note.

Model

ANSYS FE model is shown in Fig. 1. Two models were used for analysis. The old one described in details at TD-99-030, TD-99-035. The new one has several changes:

- all sliding surfaces, marked as blue "stars", were modeled with friction contacts (μ =0.1);
- frictionless elements were utilized for lines with interference/gap properties;
- stainless steel shim with gap capacity has been added to the yoke split area.

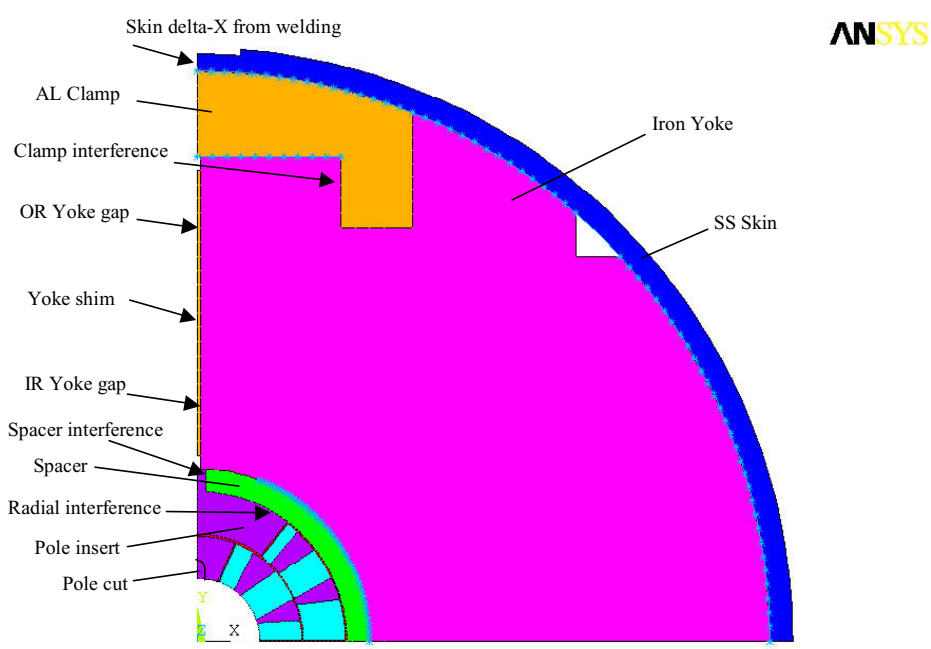

Figure 1. Magnet model.

Coil in Rigid Boundary at 4K & Bmax=11T.

First step in analysis is an overlook of coil behavior in rigid boundaries under max current load at 11T. The goal is an estimation of maximum coil stress and turn displacements, which will be a reference point for future analysis.
Only part of the model (coil and poles) with rigid radial boundary was used in this step (see Fig. 2). There is no constraining on Y-symmetry line in the model. The line moves together with the coil in azimuthal direction.

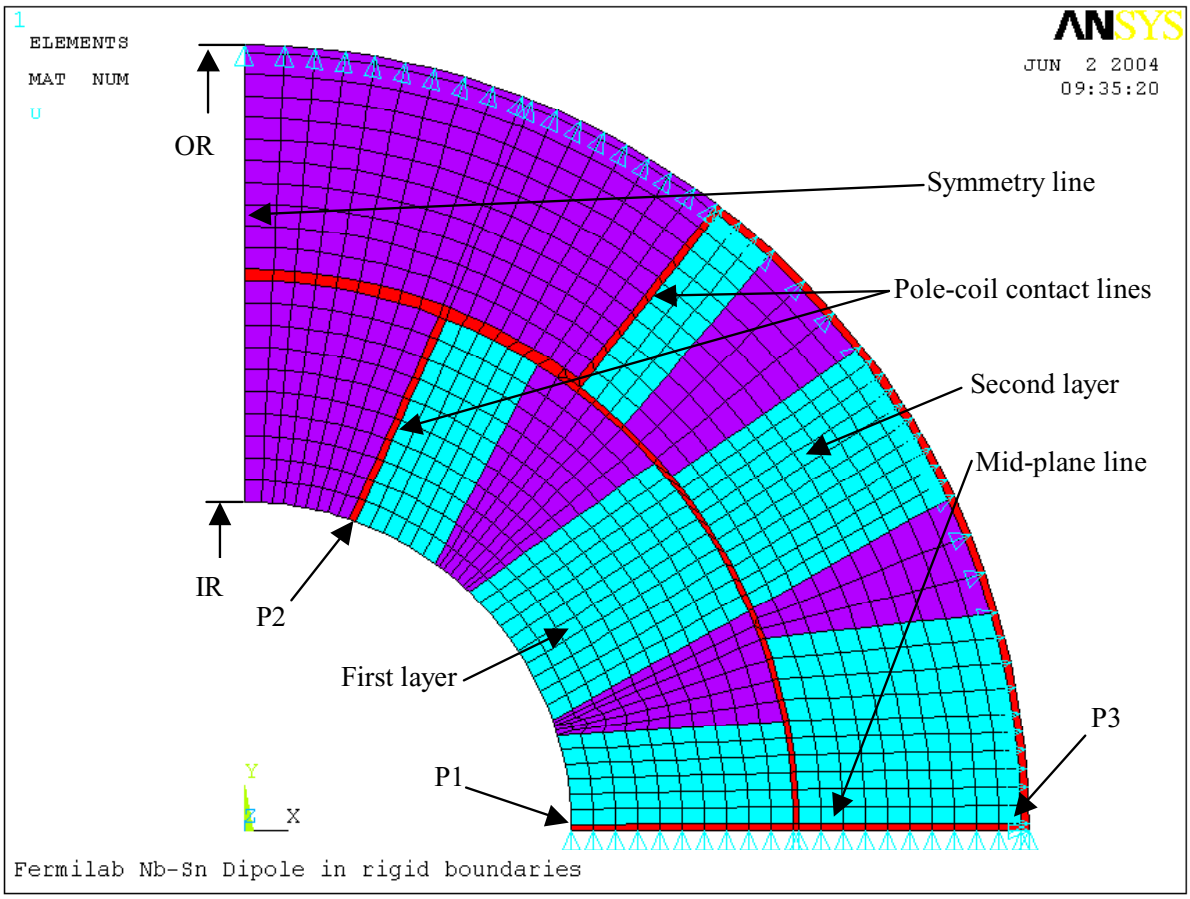

Figure 2. Coil model.

Coil stress distribution under Lorentz forces (LF) action at 4K is shown on Fig.3. Area with maximum stress of 75MPa is located in a corner of the second-layer midplane line and the coil outside radius. This is a zone of coil compression under sum of forces.
Table 1 shows coil displacements at points P1 and P2. Coil deforms by 0.02mm in X direction at P1. A pole turn at the first layer moves azimuthally by ~0.03mm.

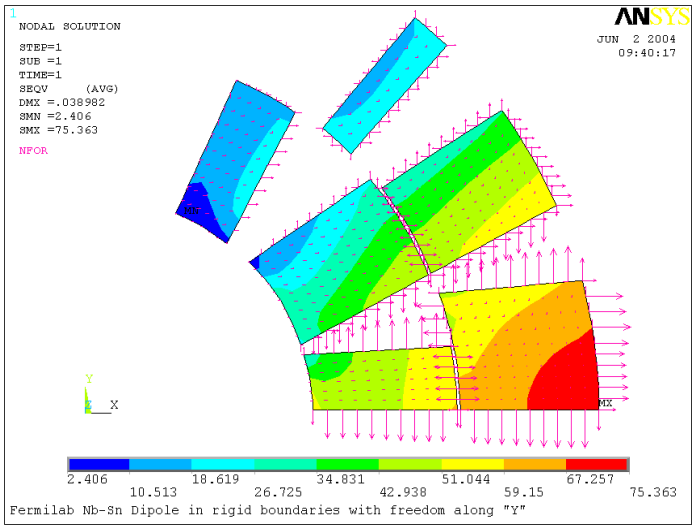

Figure 3. Coil in rigid boundary under LF.

Table 1. Coil's displacement

Point	X, µm	Y, µm
P1	20	1
P2	29	-8

Attempt to repeat previous stress picture using a conical shim 20-37-50um at the midplane shown on Fig. 4. The model is constraining at the vertical Y-symmetry line. Coil radial boundaries still rigid.

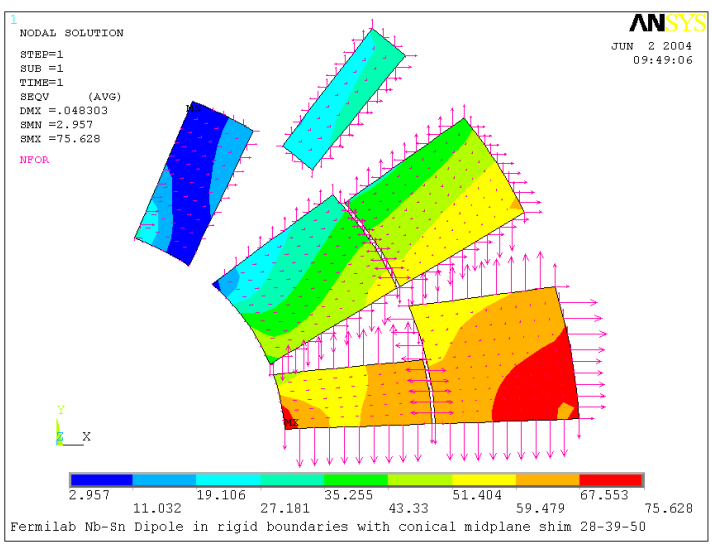

Figure 4. Coils in rigid boundary under LF action with conical m-p shim 20-37-50µm.

Smax=75MPa located at the second layer midplane area.

Conclusion:

Used of the conical mid-plane shim helps keep coil pick stress similar to LF case.
But first layer pole area loaded non-uniformly with big radial gradient.
It will be hard to transfer mid-plane load with shim to the first layer pole-area.
Part of the layer will be under tension load ~30MPa.
So, if a coil rigid boundary will be provided, it is necessary to increase overall coil pre-stress level by different (from m-p shimming) means and helps to maintain coil in contact with first poles under LF action.
It can be done in several different ways:

1. *Using midplane shims and simultaneously reduce one layer pole rigidity (Notch in metal pole piece reducing rigidity at smaller R)*
2. *Increasing shrinkage of second pole by changing pole material from Al-Br to Al after coil reaction.*
3. *Using pole shim for the first layer.*

1 and 3 do not work for magnet #5, but may be useful in future models.

Question: How to maintain a "rigid cylindrical boundary" for the spacer at Bmax?

The support structure around the spacer should be as much rigid as possible, or the coil displacement under LF at two basic points P1 and P3 should be minimized, especially delta X for P3 (X505).

Question: How to achieve max rigidity?

On Y-symmetry line structure is weak due to vertical yoke split. Only the Al clamp and welded or bolted SS skin hold two coils. The same situation is on the X-line.
Therefore, closing yoke gap and compressing two iron yokes should increase magnet overall XY-stiffness.

Conclusion:

Yoke vertical gap should be closed at Bmax and at 4K also.
Using the yoke shims may help to achieve this goal and control most critical X-motion of the coil for magnet #5.

Question: How big forces can we use for that on ¼ of the model?

It is known, LF=2800N/mm
In case when only welded SS skin works, the force is limited by material yield parameter at 300K Sy=235MPa and at 4K Sy=450MPa
Skin may withstand F=235*8=1880N/mm at 300K and F=450*8=3600N/mm at 4K.
In case when only Al clamp works:
Al clamp or cylinder thickness needs to be 2800/300=9mm.We have 25mm AL key, calculated for 3500N shear stress.

Conclusion:

Force F=1880+3500=5780N/mm as twice as LF may be used for the yoke compression.

Magnet at Lorentz Force Action, 4K.

Let's check coil stress and motion of midplane-IR, if only part of the model is working. It helps to understand importance of each magnet components. Full existing ANSYS model was used for analysis.

Question: What will be coil stress @ X-displacement if only welded SS skin works?
Second layer pole made of 50% Aluminum bronze (Al-Br) and 50% Aluminum (Al). Spacer material is Al-Br.

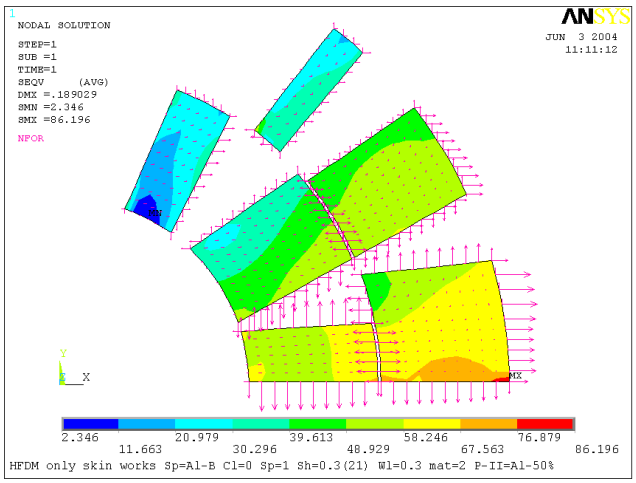

Figure 5. Only skin works with 50% Al for second pole.

DeltaX505=-0.184mm, Sskin=435MPa, Scoil-max=86MPa

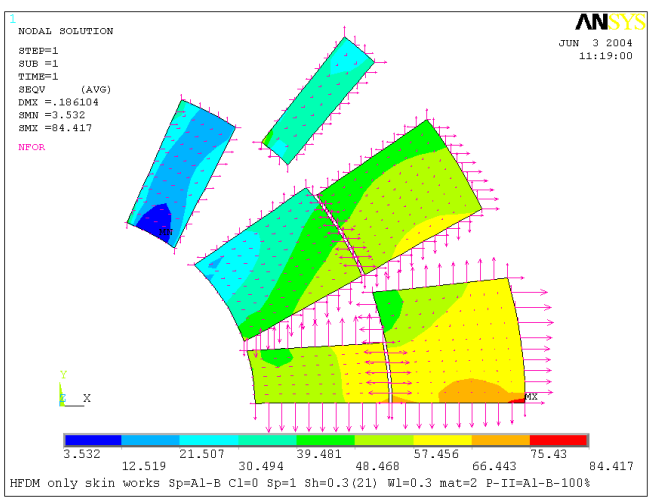

Figure 6. Only skin works with 100% Al-Br for second pole.

DeltaX505= -0.186mm, Sc-max=84MPa

Conclusion:

More rigid material for the second-layer pole reduced max stress slightly. But the first layer pre-compression at the pole is reduced also and, as a result, we have a boundary tension in this part of the model.

Question: What will be coil stress @ X-displacement if only Al clamp works?

Second layer pole made of 100% Al-Br. Spacer material is Al-Br.

DeltaX505=-0.180mm,
Sclamp-max=340MPa,
Sc-max=85MPa
(this variant did not work at 4K B=0, solution does not converge)

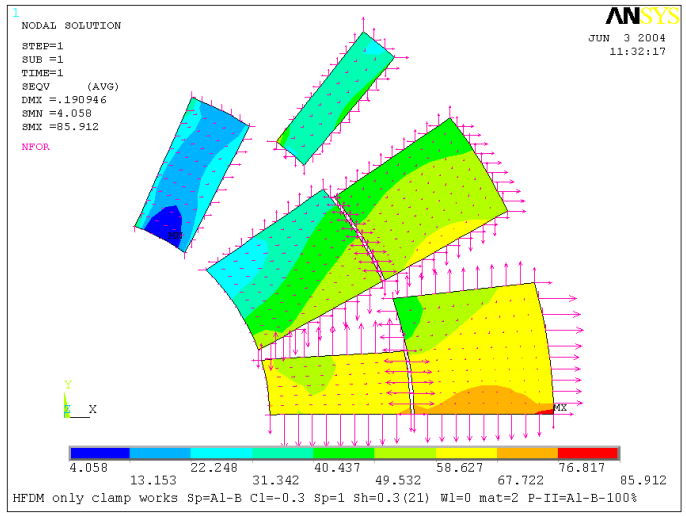

Figure 7. Only Al clamp works with 100% Al-Br for second pole.

Conclusion:

AL clamp can carry LF load alone.

Question: What will be coil stress @ X-displacement if SS skin and Al clamp work?

Second layer pole made of 100% Al-Br. Spacer material is Al-Br.

DeltaX505=-0.205mm,
Sc-max=102MPa

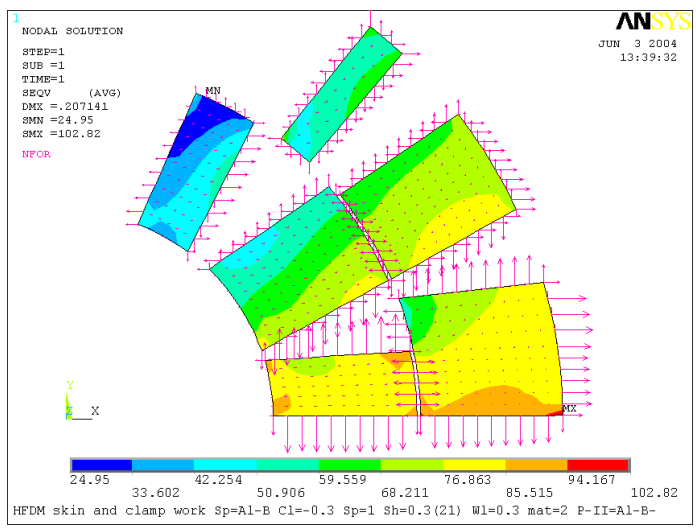

Figure 8. Skin and Al clamp work with 100% Al-Br for second pole.

Conclusion:

Since both structural elements are working together, pre-compression forces after cooling down is higher and coil X-displacement is bigger.
Coil displacement bigger by 0.205-0.180=0.025mm or 1mil.
Smax increased by 17MPa.

Question: What will be coil stress @ X-displacement if spacer, skin and Al clamp work?

Second layer pole made of 100% Al-Br.
Spacer material is Al-Br.

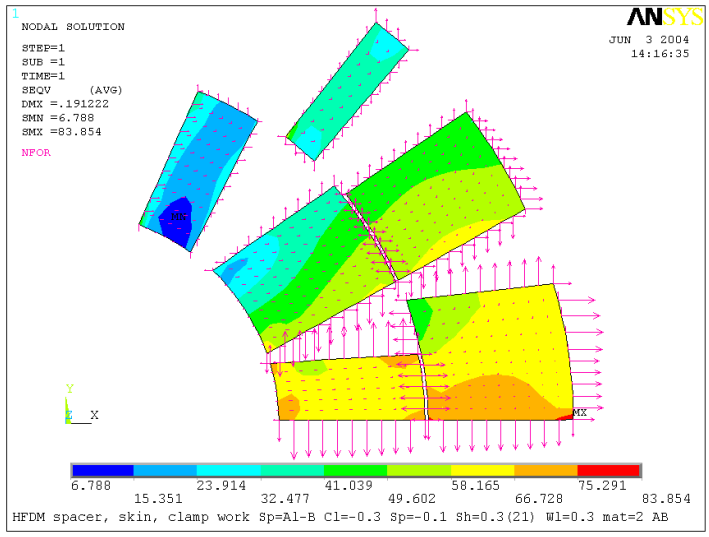

DeltaX505=-0.175mm,
Sclamp-max=341MPa,
Sc-max=83MPa

Figure 9. Skin and Al clamp work with 100% Al-Br for second pole.

Second layer pole made of 100% Al-Br. Spacer material is Al

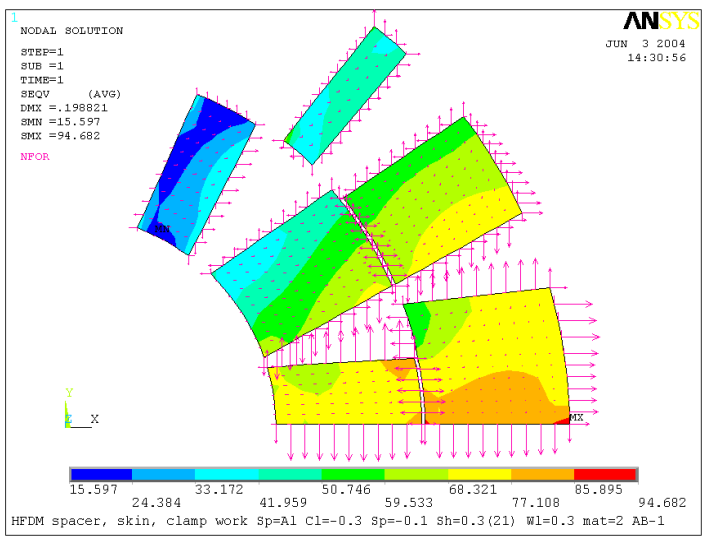

DeltaX505=-0.194mm,
Sclamp-max=295MPa,
Sc-max=94MPa

Figure 10. Skin and Al clamp work with 100% Al-Br for second pole.

Conclusion:

In case of Al spacer the coil travel at m-p (X) is 0.020mm higher than for AL-Br material and, as a result, Smax increased by 11MPa.

Now, let's close the yoke gap and increase yoke rigidity. Two metal shims will be inserted into yoke split. First is one-inch wide shim placed near the spacer and second one is the same width shim near the clamp. Shim thickness is different due to yoke bending.

Question: What should be yoke shim profile for skin+clamp variant?

Second layer pole made of 100% Al-Br.
Spacer material is Al.
Yoke gaps: 0.135 mm from ID and 0.27mm from OD

DeltaX505=-0.186mm,
Sclamp-max=324MPa,
Sc-max=89MPa.

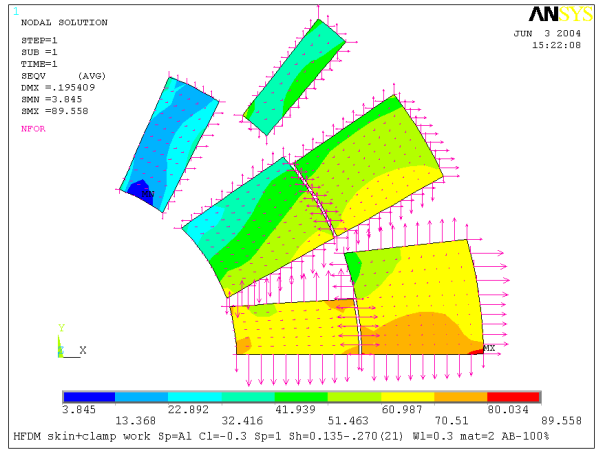

Figure 11. Skin and Al clamp work with 100% Al-Br for second pole.

Second layer pole made of 50% Aluminum bronze (Al-Br) and 50% Aluminum (Al).
Spacer material is Al.
Yoke shim: 0.13 mm from ID and 0.26mm from OD

DeltaX505=-0.182mm,
Sclamp-max=354MPa,
Sc-max=86MPa.

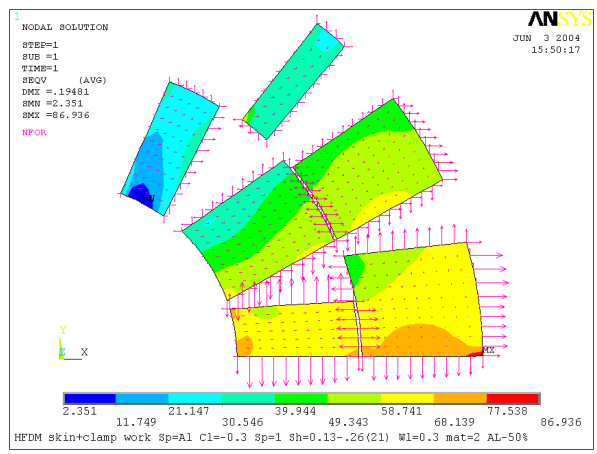

Figure 12. Skin and Al clamp work with 100% Al-Br for second pole.

Second layer pole made of 50% Al-Br and 50% Al.
Spacer material is Al-Br.

Conclusion:

Coil pick-stress located at second layer midplane-OR area. The spacer doesn't help manage the coil stress at this stage.
Yoke shims help to control X motion of the coil boundary.
Material change for the second-layer pole-peace helps with stress distribution of two coil's layers.
Coil X-motion has an optimal value ~0.180mm with minimal pick coil stress.

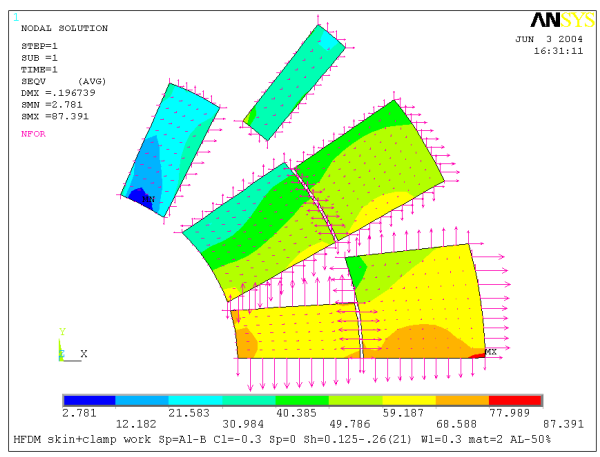

Figure 13. Skin and Al clamp work with 100% Al-Br for second pole.

Magnet After Cooling Down from 300K to 4K.

Next series of pictures demonstrated coil stress distribution after magnet cooling down from 300K to 4K. All of them arranged at the same way like in case with LF. Additionally, they are paired for better comparison.

Question: What will be coil stress @ X-displacement if only SS welded skin works?

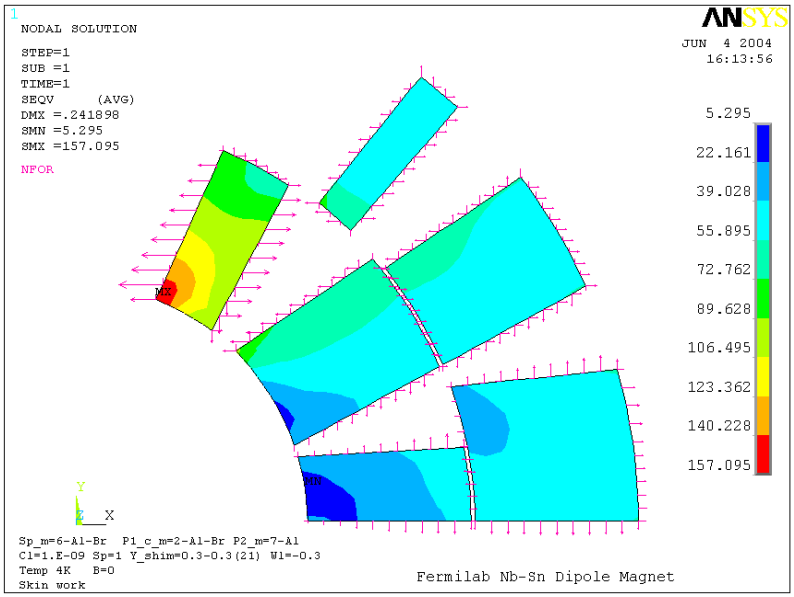

Figure 14. Only skin works with 50% Al for second pole and Al-Br in pole cut.

Delta-max=-0.241mm, Sc-max=157MPa

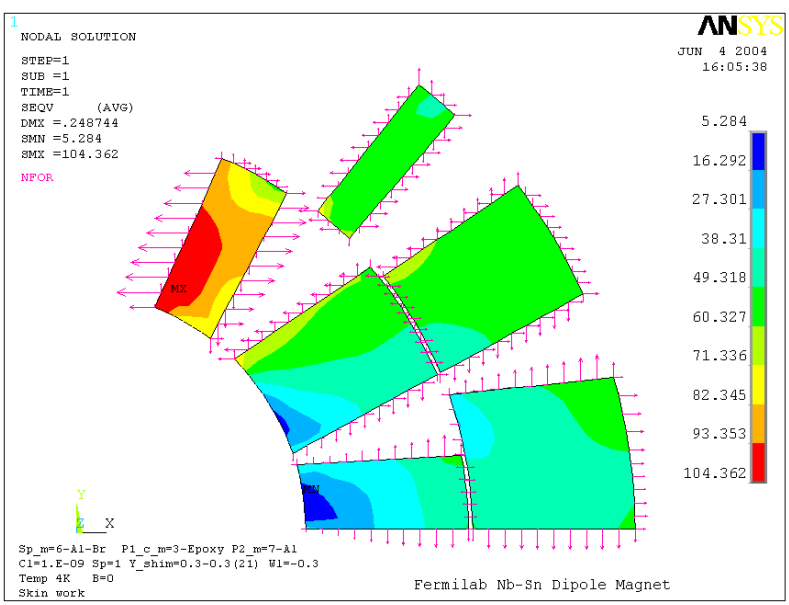

Figure 15. Only skin works with 50% Al for second pole and Epoxy in pole cut.

Delta-max=-0.248mm, Sc-max=104MPa.

Stress change for different material in the pole cutout is 157-104=53MPa.

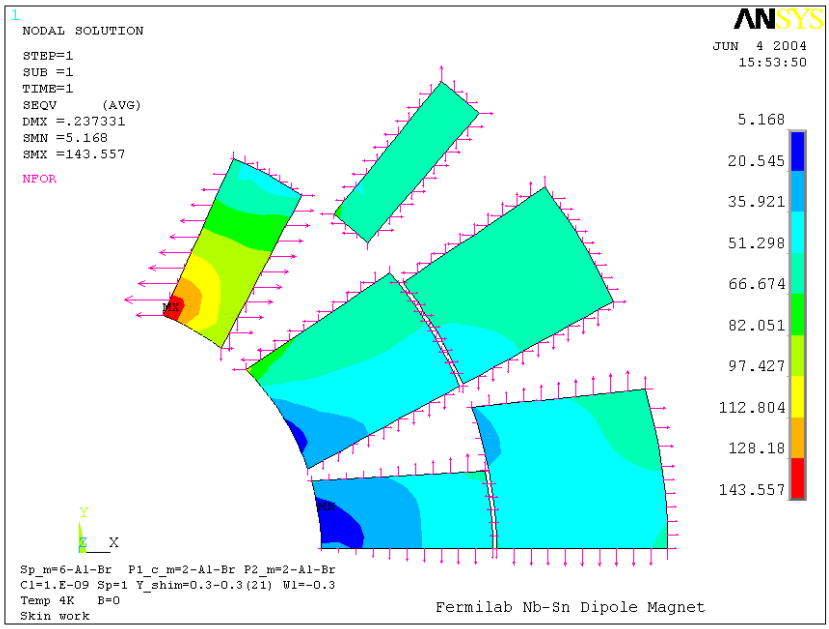

Figure 16. Only skin works with Al-Br for second pole and Al-Br in pole cut.

Delta-max=-0.237mm, Sc-max=143MPa

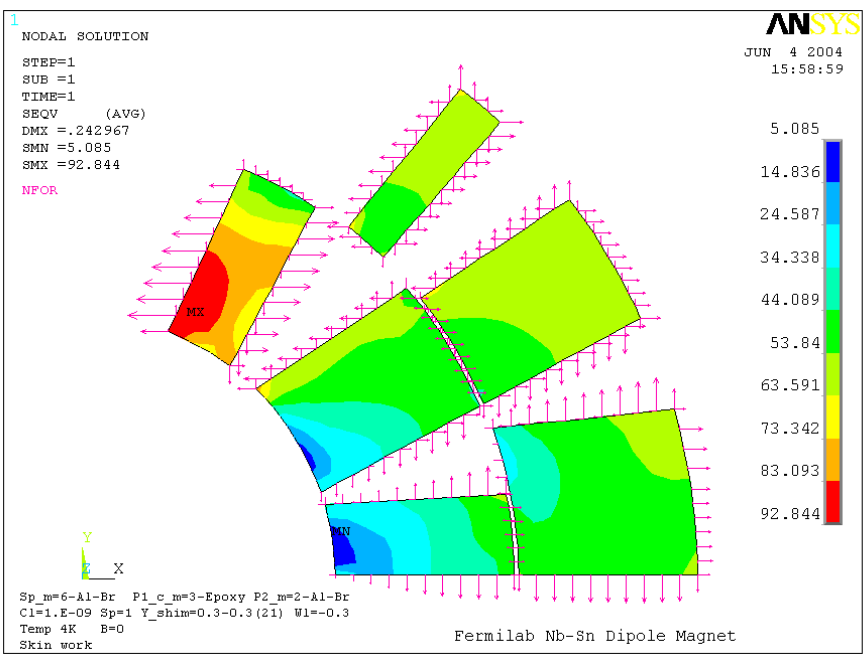

Figure 17. Only skin works with Al-Br for second pole and Epoxy in pole cut.

Delta-max=-0.242mm, Sc-max=92MPa

Stress change for different material in the pole cutout is 143-92=51MPa.

Question: What will be coil stress @ X-displacement if SS skin and Al clamp work?

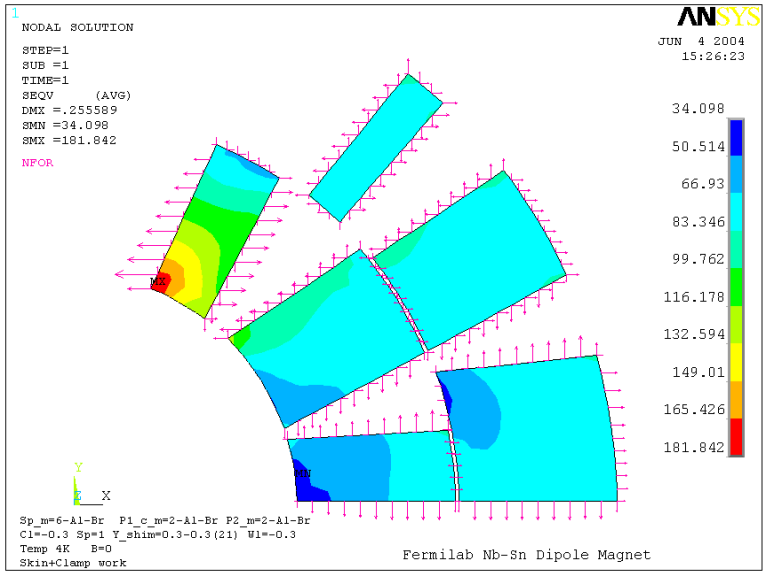

Figure 18. Skin and clamp are working with Al-Br for second pole and Al-Br in pole cut.

Delta-max=-0.255mm, Sc-max=181MPa

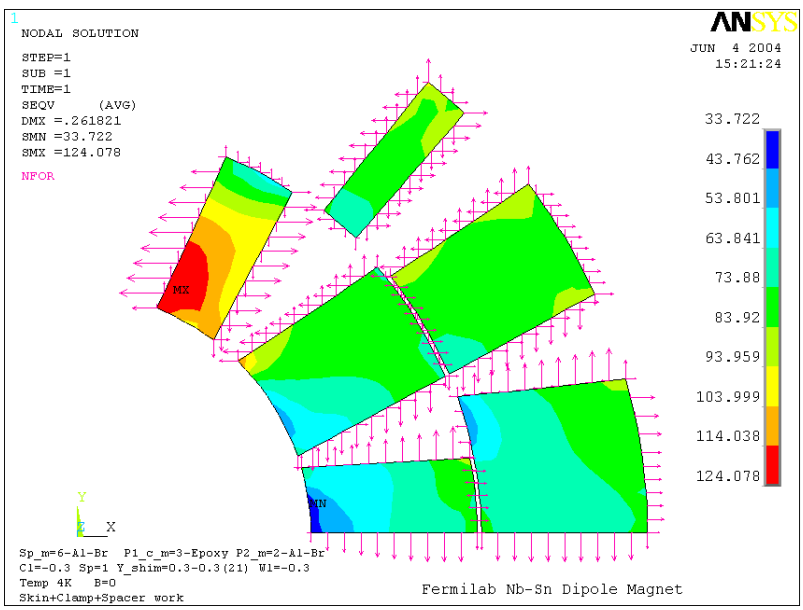

Figure 19. Skin and clamp are working with Al-Br for second pole and Epoxy in pole cut.

Delta-max= 0.261mm, Sc-max=124MPa

Stress change for different material in the pole cutout is 181-124=57MPa.

Question: What will be coil stress @ X-displacement if spacer, SS skin and Al clamp work?

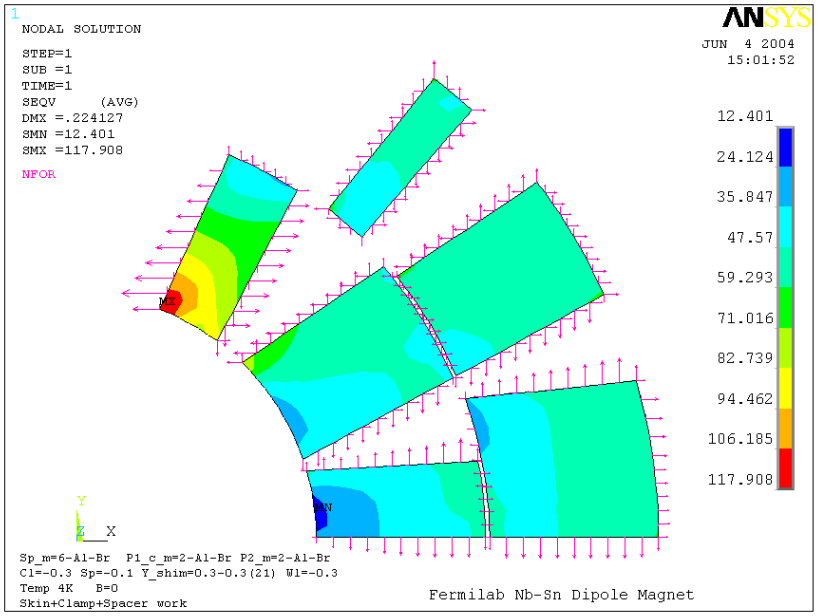

Figure 20. Skin, clamp and Al-Br spacer work with Al-Br for second pole and Al-Br in pole cut.

Delta-max=-0.224mm, Sc-max=117MPa

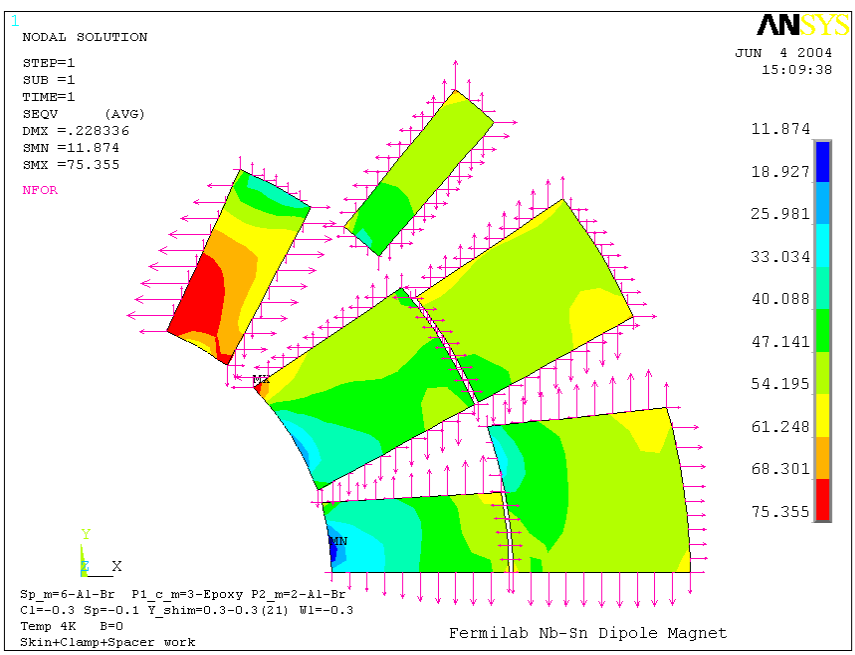

Figure 21. Skin, clamp and Al-Br spacer work with Al-Br for second pole and Epoxy in pole cut.

Delta-max= 0.228mm, Sc-max=75MPa

Stress change for different material in the pole cutout is 117-75=52MPa.

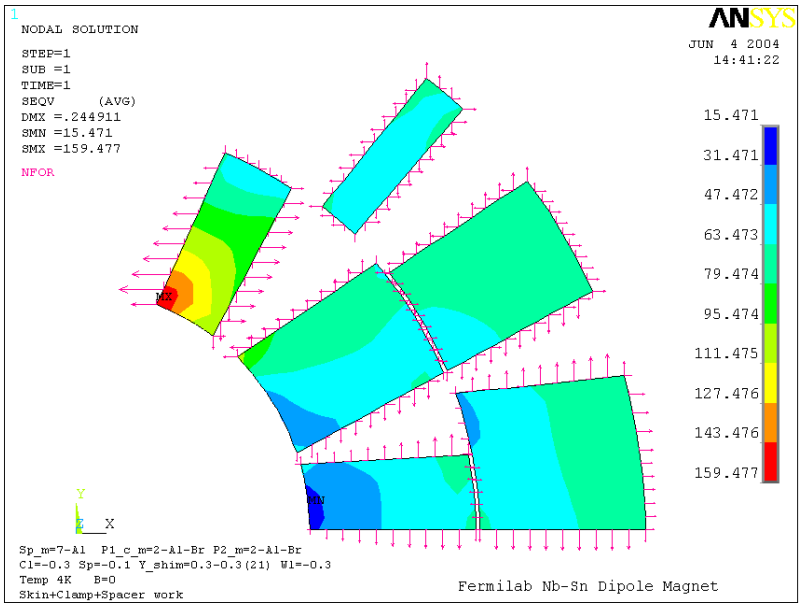

Figure 22. Skin, clamp and Al spacer work with Al-Br for second pole and Al-Br in pole cut.

Delta-max=-0.244mm, Sc-max=159MPa

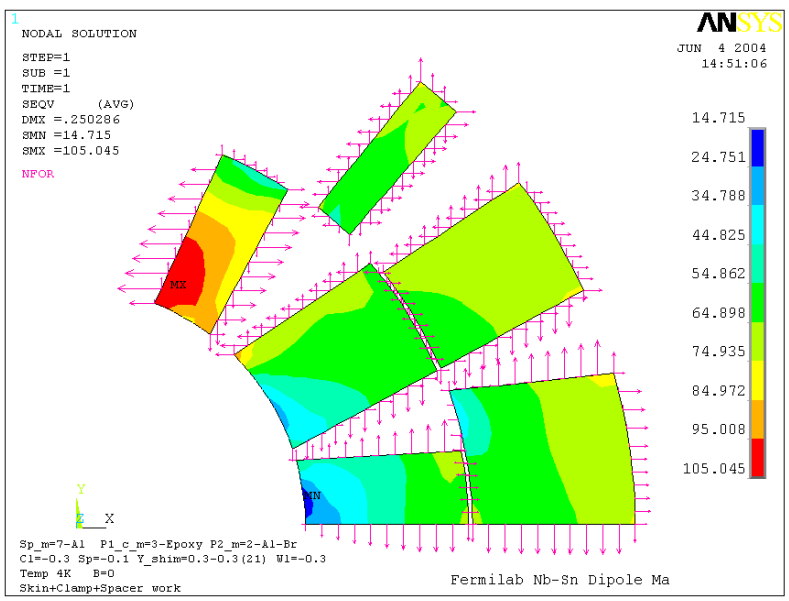

Figure 23. Skin, clamp and Al spacer work with Al-Br for second pole and Epoxy in pole cut.

Delta-max= -0.250mm, Sc-max=105MPa

Stress change for different material in the pole cutout is 159-105=54MPa.

Conclusion:

In case of using of Al spacer the coil pick stress is ~40MPa higher when for Al-Br spacer. Changing of filler material in pole cutout from Al-Br to Epoxy reduced coil pick stress by ~50MPa.

Question: What should be yoke gap profile for skin, clamp, spacer and yoke shim variant?

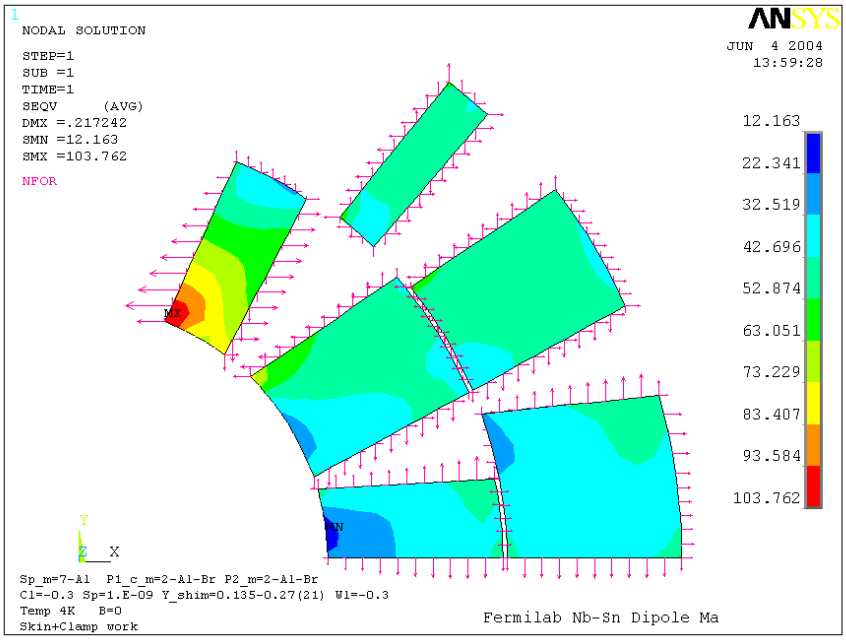

Figure 24. All components work with Al spacer, Al-Br for second pole and Al-Br in pole cut.

Delta-max=-0.217mm, Sc-max=103MPa, Yoke gap IR-OR: 0.135-0.270mm

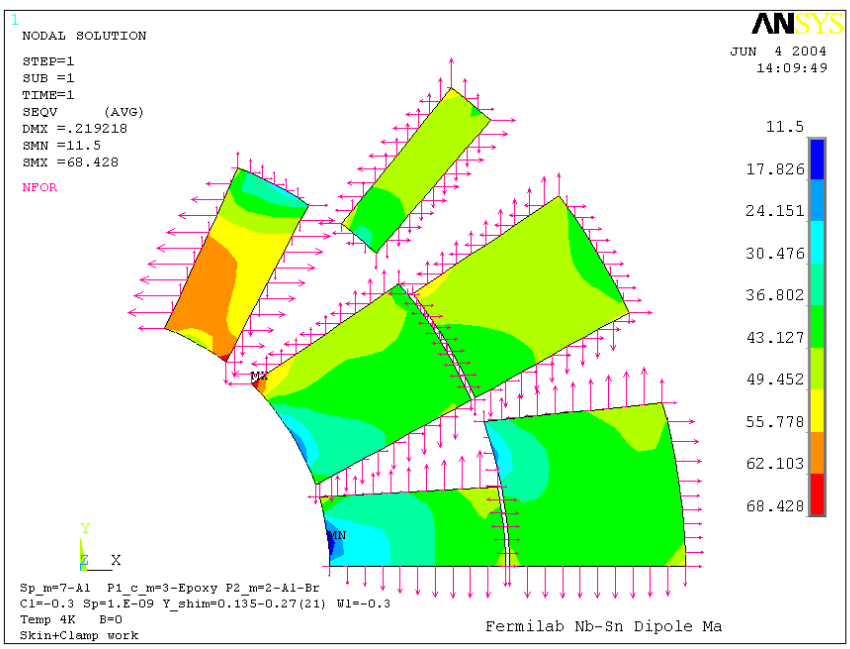

Figure 25. All components work with Al spacer, Al-Br for second pole and Epoxy in pole cut.

Delta-max=-0.219mm, Sc-max=68MPa, Yoke gap IR-OR: 0.135-0.270mm
Stress change for different material in the cutout is 103-68=35MPa.

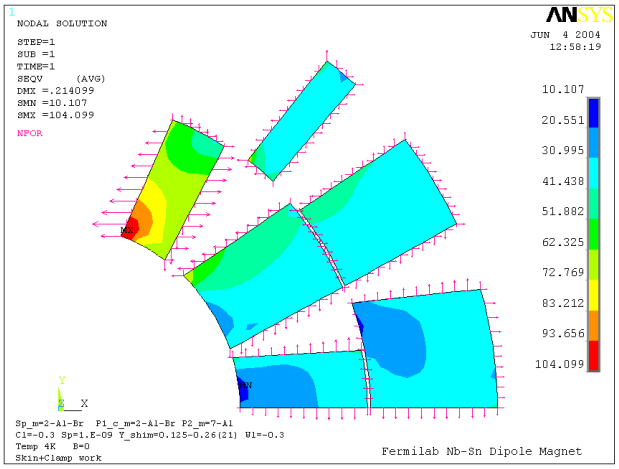

Figure 26. All components work with Al-Br spacer, 50% Al for second pole and Al-Br in pole cut.

DeltaX505=-0.214mm, DeltaX59=-0.082mm, DeltaY59=-0.013mm, Yoke gap IR-OR: 0.125-0.26mm, Ssk-max=593MPa, Sclamp-max=349MPa, Sc-max=104MPa

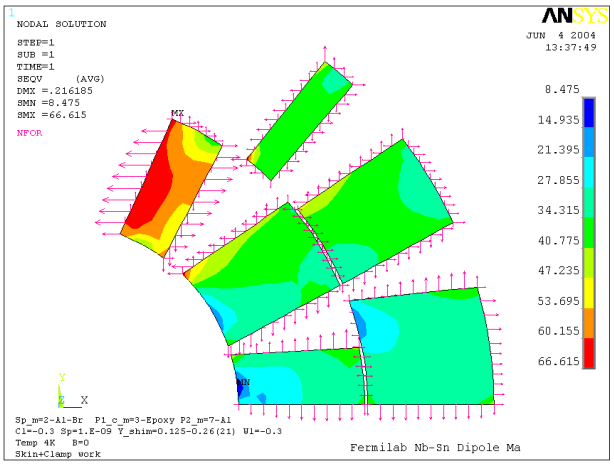

Figure 27. Only skin works with 50% Al for second pole and Epoxy in pole cut

DeltaX505=-0.216mm, DeltaX'59=-0.082mm, DeltaY'59=+0.023mm,
Yoke gap IR-OR: 0.125 - 0.26mm
Ssk-max=594MPa, Sclamp-max=349MPa, Sc-max=66MPa

Stress change for different material in the pole cutout is 104-66=38MPa.

Conclusion:

Coil pick stress is located at IR-pore region in the first layer.
Yoke shims help to manage coil motion and reduced coil stress.
Changing of filler material in pole cut from Al-Br to Epoxy reduced coil pick stress by ~40MPa.

Magnet After Bolted Skin Assembly at 300K.

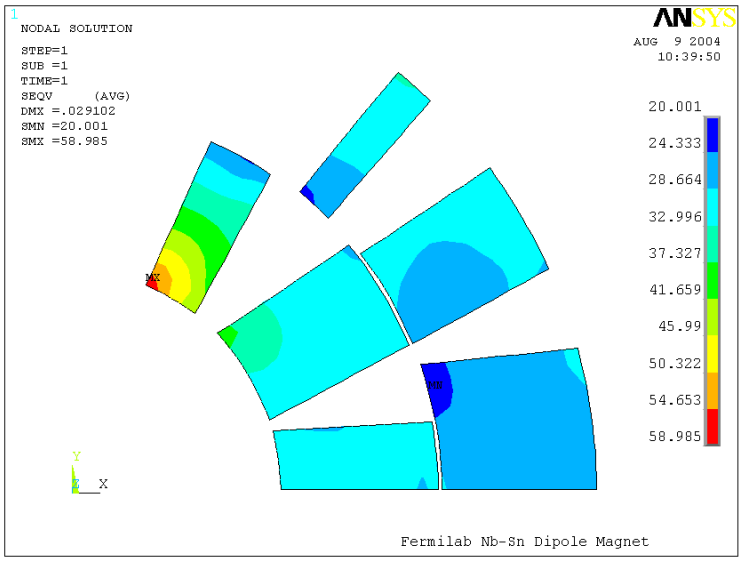

Figure 28. Only skin works, Al-Br spacer and Al-Br in pole cut

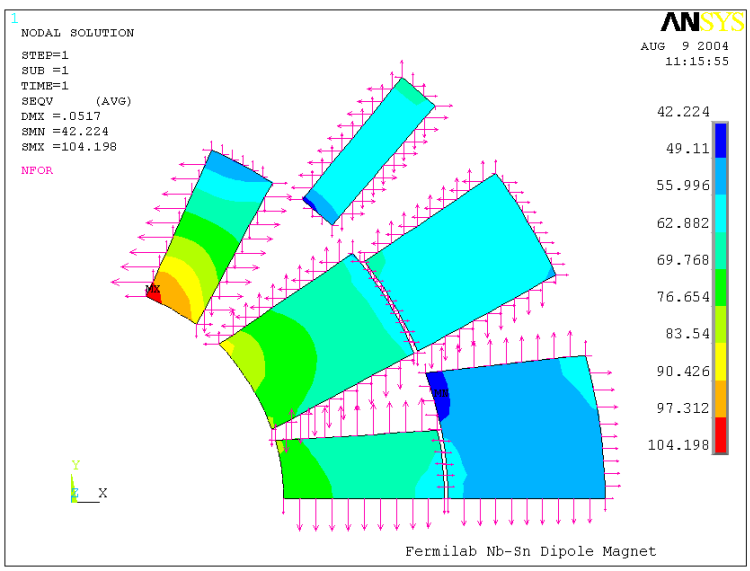

Figure 29. Skin and clamp work together, Al-Br spacer and Al-Br in pole cut

Conclusion:

Coil pick stress located at IR-pore region in the first layer.

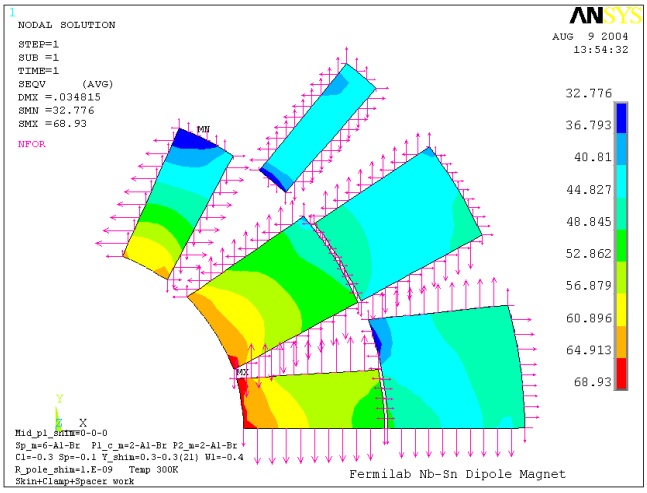

Figure 30. Skin (d=0.4), clamp and Al-Br spacer are working, Al-Br in pole cut

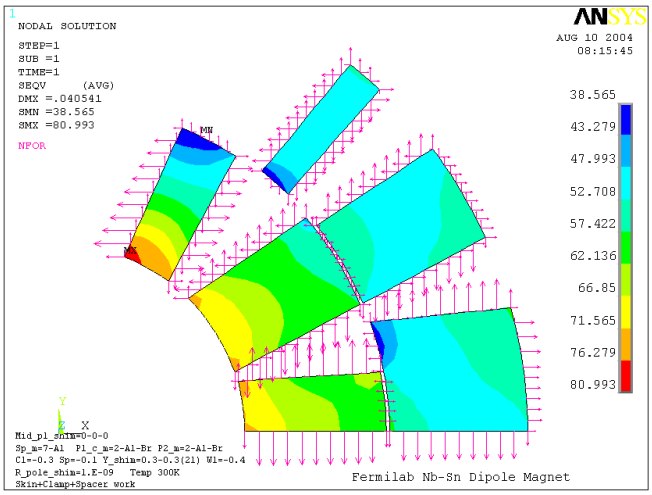

Figure 31. Skin (d=0.4), clamp and Al spacer are working, Al-Br in pole cut

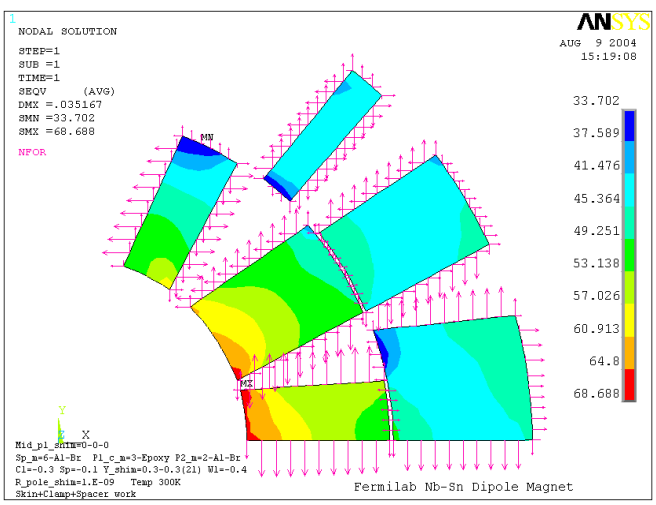

Figure 32. Skin (d=0.4), clamp and Al-Br spacer are working, Epoxy in pole cut.

Conclusion:

Coil pick stress located at IR-pore region in the first layer.

Magnet in the Press at 300K.

The goal for this assembly step is to insert the Al clamp into the yoke groove. The stress picture will depend on a vertical travel of press or yoke. The bigger is travel – the wider is groove, ease clamp insertion. The travel value depends on clamp-yoke interference. Let's assume, that 0.3mm interference requires 0.15mm of vertical press travel. The rest of the interference (0.15mm) will be created by horizontal motion of tapered clamp, using side pushers. If number will be 0.2+0.1mm, coil pick stress will be higher.

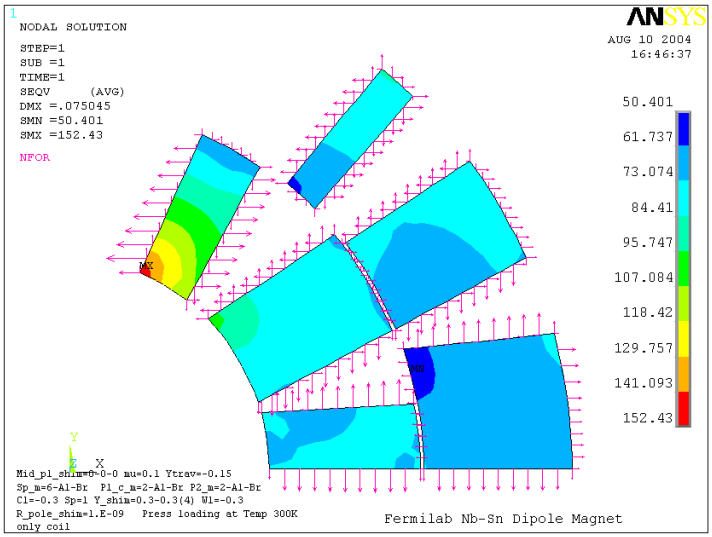

Figure 33. Yoke travel =0.15mm, Al-Br spacer gap = 1mm, Al-Br in pole cut, old model.

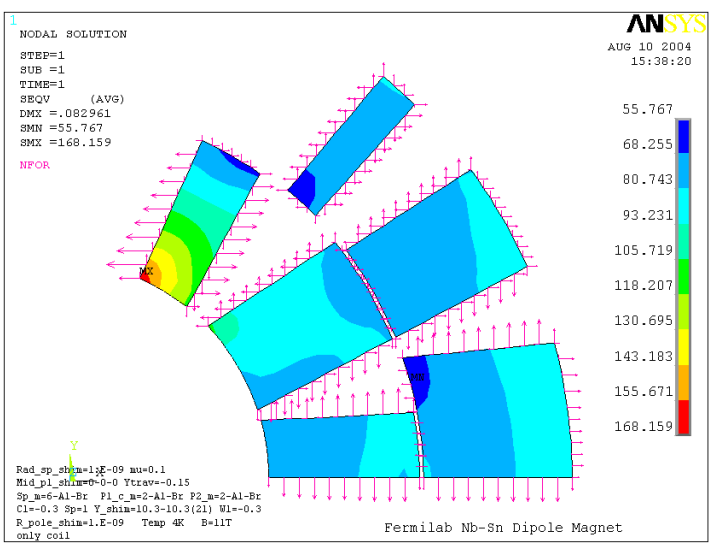

Figure 34. Yoke travel =0.15mm, Al-Br spacer gap = 1mm, Al-Br in pole cut, new model.

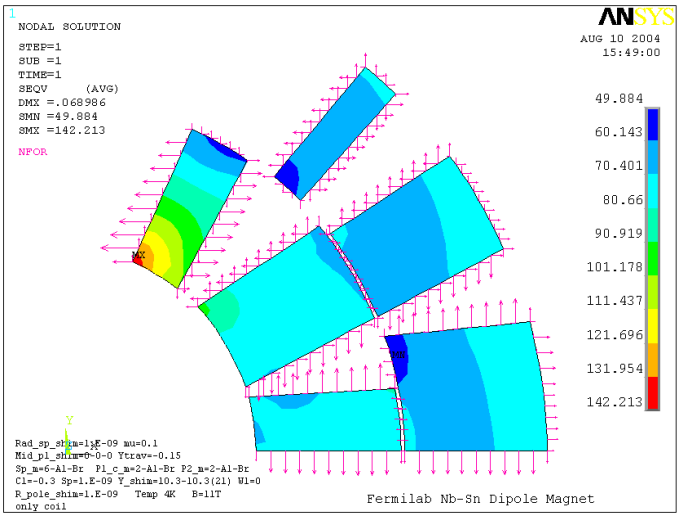

Figure 35. Yoke travel =0.15mm, Al-Br spacer interference = 0mm, Al-Br in pole cut, new model.

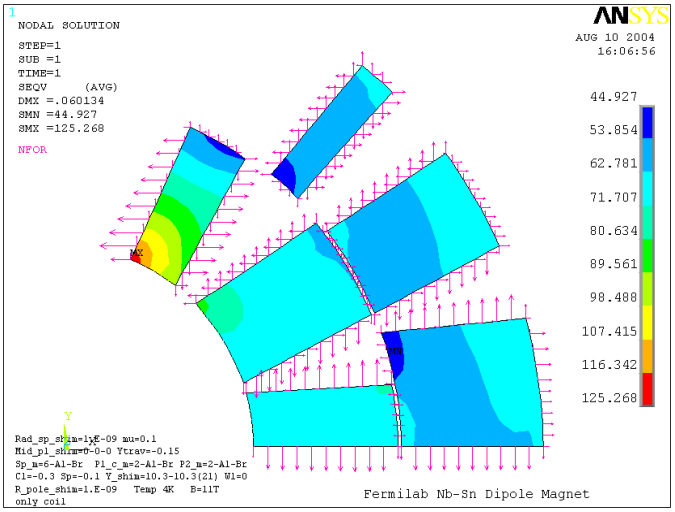

Figure 36. Yoke travel =0.15mm, Al-Br spacer interference = 0.1mm, Al-Br in pole cut, new model.

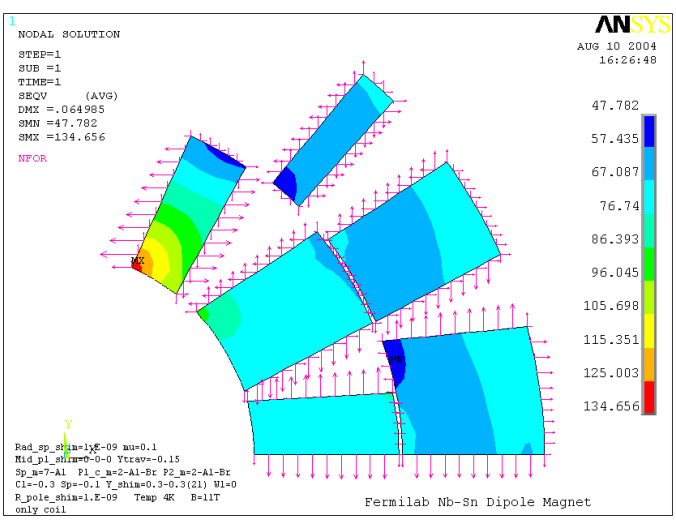

Figure 37. Yoke travel =0.15mm, Al spacer interference = -0.1mm, Al-Br in pole cut, new model.

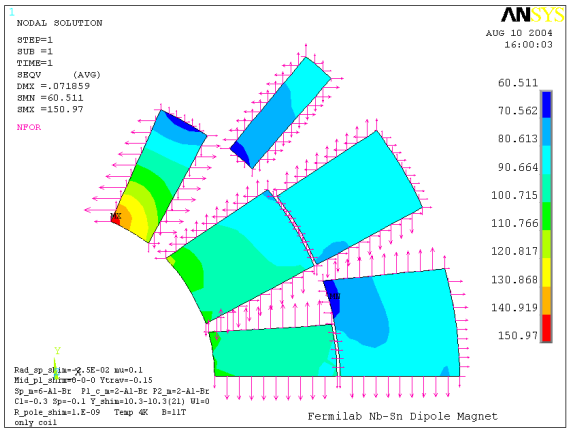

Figure 38. Yoke travel =0.15mm, Al-Br spacer interference = 0.1mm, Coil radial shim=0.025mm, Al-Br in pole cut, new model.

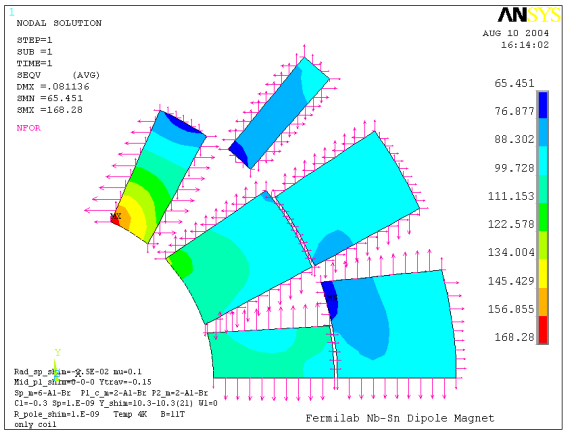

Figure 39. Yoke travel =0.15mm, Al-Br spacer interference = 0mm, Coil radial shim=0.025mm Al-Br in pole cut, new model.

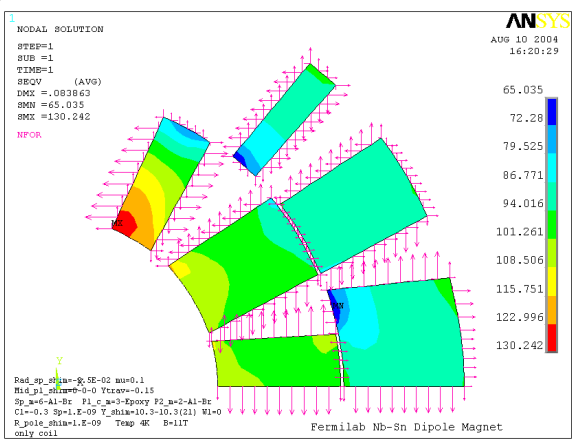

Figure 40. Yoke travel =0.15mm, Al-Br spacer interference = 0mm, Coil radial shim=0.025mm, Epoxy in pole cut, new model.

Conclusion:

Coil pick stress located at IR-pore region in the first layer and will be highest for entire magnet history.
This assembly stage requires development of very delicate assembly procedure.

Next several tables summarized all obtained results. Data in the table is divided on two parts: parameters and results (stress/displacements), and has explanation at the bottom. Information for aluminum bronze spacer with various parameters listed in Table 2.

Table 2. Results for Aluminum Bronze Spacer.

	Only skin works	Only clamp works	Skin+clamp are working	Skin+clamp+spacer are working						Skin+clamp+spacer+yoke shims are working							
PARAMETERS	1	5	7	11	17	33	34	25	30	44	46	45	43	48	53	58	63
Magnet-section	REG	REG	REG	REG	REG	REG	REG	REG	REG	REG	REG	REG	REG	REG	REG	REG	REG
Mat. in pole cut	Al-Br	Al-Br	Al-Br	Al-Br	Al-Br	Al-Br	Al-Br	Al-Br	Al-Br	Al-Br	Al-Br	Al-Br	Al-Br	Al-Br	Al-Br	Al-Br	Al-Br
Mat. of spacer	Al-Br	Al-Br	Al-Br	Al-Br	Al-Br	Al-Br	Al-Br	Al-Br	Al-Br	Al-Br	Al-Br	Al-Br	Al-Br	Al-Br	Al-Br	Al-Br	Al-Br
Mat. for 2 pole	Al-Br	Al-Br	Al-Br	Al-Br	Al-Br	Al-Br	Al-Br	Al-Br	Al-Br	Al-Br	Al-Br	Al-Br	Al-Br	Al-Br	Al-Br	Al-Br	Al-Br
Clamp interfer.	0	-0.3	-0.3	-0.3	-0.3	-0.3	-0.3	-0.3	-0.3	-0.3	-0.3	-0.3	-0.3	-0.3	-0.3	-0.3	-0.3
Spacer interfer.	1	1	1	-0.1	-0.1	-0.1	-0.1	0	0	0	0	0	0	0	0	-0.025	-0.025
Radial interfer.	0	0	0	0	0	0	0	0	0	0	0	0	0	-0.025	-0.05	-0.025	-0.05
Skin weld delta	0.3	0	0.3	0.3	0.4	0.3	0.3	0.3	0.3	0.3	0.3	0.3	0.3	0.3	0.3	0.3	0.3
IR Yoke gap	0.3	0.3	0.3	0.3	0.3	0.125	0.125	0.13	0.125	0.125	0.125	0.125	0.1	0.1	0.1	0.1	0.1
OR Yoke gap	0.3	0.3	0.3	0.3	0.3	0.26	0.25	0.26	0.225	0.225	0.25	0.25	0.2	0.2	0.2	0.2	0.2
M-P shim	0	0	0	0	0	0	0	0	0	0	0	0.025	0	0	0	0	0
R pole shim	0	0	0	0	0	0	0	0	0	0	-0.025	0	0	0	0	0	0
R spacer shim	0	0	0	0	0	0	0	0	0	-0.025	0	0	-0.025	0	0	0	0
RESULTS						*	*	*	*	*	*	*	*	*	*	*	*
in press, delta=0.125mm		140(61)*	140(61)*	101(47)*	101(47)*		101(47)	118(54)	118(54)	112(56)	119(55)	124(68)	112(56)	144(71)	171(100)		166(96)
in press, delta=0.150mm		168(72)*	168(72)*	125(58)*	125(58)*		125(58)	142(65)	142(65)					168(83)	186(108)		
with clamp		58(34)*	58(34)*	26(11)*	26(10)*		26(10)	39(24)	39(24)	51(30)	43(28)	72(33)	51(30)	64(38)	88(48)		88(48)
skin on, 300K	58(29)		104(57)	61(35)	68(42)	61(35)	61(35)	77(50)	68(42)	101(62)	86(54)	103(60)	101(62)	101(62)	129(77)	99(59)	127(74)
delta-max	0.029		0.051	0.029	0.034	0.029	0.029	0.038	0.04	0.049	0.043	0.04	0.049	0.049	0.064	0.048	0.064
P3 delta X-505	-0.029		-0.051	-0.023	-0.03		-0.023	-0.037	-0.038					-0.043	-0.048	-0.038	
P2 delta X-59	-0.007		-0.012	-0.005	-0.006		-0.004	-0.008	-0.008					-0.009	-0.01	-0.008	
P1 delta X-3	-0.028		-0.049	-0.023	-0.03		-0.023	-0.036	-0.036					-0.042	-0.047	-0.039	
Sskin, m-p avr.	170		172	194	218		195	181								195	
4K	143(58)		183(73)	117(50)	132(54)	89(37)	89(37)	98(45)	97(37)	131(62)	89(45)	105(56)	98(47)	98(46)	131(68)	96(45)	129(66)
delta-max	0.237		0.256	0.224	0.236	0.21	0.21	0.217	0.214	0.23	0.212	0.214	0.214	0.214	0.23	0.213	0.229
P3 delta X-505	-0.237		-0.257	-0.224	-0.231		-0.21	-0.217	-0.214					-0.214	-0.23	-0.213	
P2 delta X-59	-0.046		-0.051	-0.042	-0.044		-0.039	-0.04	-0.04					-0.039	-0.043	-0.039	
P1 delta X-3	-0.151		-0.171	-0.139	-0.146		-0.125	-0.131	-0.128					-0.129	-0.146	-0.128	
Sskin, m-p avr.	325		296	332	378		355	340								390	
Bmax=11T	84(26)	85(36)	106(54)	85(35)	96(40)	83(34)	83(36)	88(50)	91(37)	105(47)	92(47)	102(49)	97(40)	97(40)	120(55)	95(40)	118(65)
delta-max	0.186	0.19	0.209	0.191	0.195	0.188	0.188	0.195	0.19	0.205	0.193	0.185	0.199	0.199	0.214	0.198	0.212
P3 delta X-505	-0.186	-0.18	-0.21	-0.181	-0.189		-0.177	-0.188	-0.185					-0.186	-0.196	-0.184	
P2 delta X-59	-0.025		-0.033	-0.025	-0.027		-0.024	-0.027	-0.026					-0.026	-0.028	-0.026	
P1 delta X-3	-0.085		-0.11	-0.082	-0.09		-0.078	-0.088	-0.085					-0.087	-0.098	-0.086	
Sskin, m-p avr.	330	340	308	340	390		360	340								390	
Sclamp				100													
LF delta X P1	0.066		0.061	0.057	0.056		0.047	0.043	0.043					0.042	0.048	0.042	
LF delta X P2	0.021		0.018	0.017	0.017		0.015	0.013	0.014					0.013	0.015	0.013	
LF delta X P3	0.051		0.047	0.043	0.042		0.033	0.029	0.029					0.028	0.034	0.029	
S1	20-T	25-T	40-C	20-T	"0"	20-T	20-T	15-T	10-T	25-C	15-T	25-C	"0"	"0"	25-C	"0"	25-C

* · new model-*

340 - stress in MPa

84(26) - coil pick stress in MPa (secon layer, pole area, compression stress)

0.051, 0.186 - displacement in mm

20-T - for first layer pole area, 20 MPa in tension

40-C - for first layer pole area, 40 MPa in compresssion

Column #17 corresponds to the basic variant for all previously build magnets.

S1 is an average coil stress in the first layer at pole area. “Green” number represents compression and “red”- tension. Delta X for P1-3 is a displacement under only LF action. These numbers (P3=0.028mm instead of 0.042mm for basic) are smaller for more rigid “shimmed” cases. Yoke shims (all variants with IR and OR gap less then 0.3mm) help to reduce coil pick stress after magnet cooling down step. The coil may be in dangerous situation only under “press load “ during clamp insertion (in press, delta=0.150mm), since all applied loads (no protection from spacer, interference is negative) transferred directly to the coil. So, special clamping procedure requires for this assembly step.

Table 3 presents two acceptable solutions for the case with stainless steel spacer.

Table 3. Results for Stainless Steel Spacer.

	Only skin works	Skin+clamp+spacer+yoke shims are working	
PARAMETERS	6	21	22
Magnet-section	REG	REG	REG
Mat in pole cut	Al-Br	Al-Br	Al-Br
Mat of spacer	SS	SS	SS
Mat for 2 pole	Al-Br	Al-Br	Al-Br
Clamp int	-0.3	-0.3	-0.3
Spacer int	1	1	0.05
Radial int	0	0	0
Skin delta	1	0.3	0.3
IR Yoke shim	0.3	0.13	0.13
OR Yoke shim	0.3	0.26	0.26
M-P shim	0	0	0
R pole shim	0	0	0
R spacer shim	0	0	0
RESULTS			
press delta=0.125mm	140(61)*	141(60)*	126(55)*
with clamp	58(34)*	58(34)*	58(34)*
skin on, 300K	78(50)	104(60)	91(56)
delta-max	0.039	0.051	0.043
4K	111(57)	112(52)	107(50)
delta-max	0.222	0.221	0.219
Bmax=11T	80(25)	95(44)	92(42)
delta-max	0.182	0.199	0.197
S1	40-T	20-C	15-C

Table 4 contains results for aluminum spacer. The table illustrates effects of different components and parameters on coil stress picture.

Table 4. Results for Aluminum Spacer.

	Skin+clamp+spacer are working				Skin+clamp+spacer+yoke shims are working									
PARAMETERS	13	15	16	18	19	20	23	24	26	27	36	37	38	39
Magnet-section	REG	REG	REG	REG	REG	REG	REG	REG	REG	REG	REG	REG	REG	REG
Mat in pole cut	Al-Br	Epoxy	Al-Br	Al-Br	Al-Br	Al-Br	Al-Br	Epoxy	Al-Br	Epoxy	Al-Br	Al-Br	Al-Br	Al-Br
Mat of spacer	Al	Al	Al	Al	Al	Al	Al	Al	Al	Al	Al	Al	Al	Al
Mat for 2 pole	Al-Br	Al-Br	Al-Br	Al-Br	Al-Br	50%Al	Al-Br	Al-Br	50%Al	50%Al	Al-Br	Al-Br	Al-Br	Al-Br
Clamp int	-0.3	-0.3	-0.3	-0.3	-0.3	-0.3	-0.3	-0.3	-0.3	-0.3	-0.3	-0.3	-0.3	-0.3
Spacer int	-0.1	-0.1	-0.15	-0.1	1	1	0	0	0	0	-0.1	-0.15	-0.15	-0.15
Radial int	0	0	0	0	0	0	0	0	0	0	0	0	0	0
Skin delta	0.3	0.3	0.3	0.4	0.3	0.3	0.3	0.3	0.3	0.3	0.3	0.3	0.3	0.3
IR Yoke shim	0.3	0.3	0.3	0.3	0.135	0.13	0.135	0.135	0.13	0.13	0.125	0.3	0.15	0.15
OR Yoke shim	0.3	0.3	0.3	0.3	0.27	0.26	0.27	0.27	0.26	0.26	0.25	0.3	0.3	0.275
M-P shim	0	0	0	0	0	0	0	0	0	0	0	0	0	0
R pole shim	0	0	0	0	0	0	0	0	0	0	0	0	0	0
R spacer shim	0	0	0	0	0	0	0	0	0	0	0	0	0	0
RESULTS	*	*	*	*	*	*	*	*	*	*	*	*	*	*
press delta=0.125mm	110(51)	85(51)	105(49)	110(51)		140(55)			123(53)	94(50)		105(49)		
with clamp	32(16)	32(16)	28(12)	32(16)	58(34)				41(26)	40(25)		28(12)	28(12)	
skin on, 300K	63(40)	67(40)	65(39)	80(50)					87(50)	74(50)		65(39)		
delta-max	0.033	0.033	0.032	0.04					0.042	0.044		0.032		
4K	159(59)	105(60)	146(58)	174(62)			103(47)	68(48)	106(43)	66(40)	88(35)	146(58)	119(48)	117(45)
delta-max	0.244	0.25	0.239	0.253			0.217	0.219	0.216	0.218	0.21	0.239	0.225	0.224
Bmax=11T	94(41)	103(52)	93(40)	109(50)	89(40)	86(34)			87(37)	86(35)	88(37)	93(40)		
delta-max	0.198	0.202	0.196	0.208	0.195	0.194			0.193	0.194	0.189	0.196		
delta X-505	-0.194				-0.186	-0.182								
Sskin	295				324	354								
S1	20-C	15-C	10-C	36-C	"0"	"0"			15-C	0-5-T	25-T	10-C		

		Skin+clamp+spacer+yoke shims are working												
PARAMETERS		40	41	42	49	51	54	56	59	61	64	66	68	69
Magnet-section		REG	REG	REG	REG	REG	REG	REG	REG	REG	REG	REG	REG	REG
Mat in pole cut		Al-Br	Al-Br	Al-Br	Al-Br	Al-Br	Al-Br	Al-Br	Al-Br	Al-Br	Al-Br	Al-Br	Epoxy	Epoxy
Mat of spacer		Al	Al	Al	Al	Al	Al	Al	Al	Al	Al	Al	Al	Al
Mat for 2 pole		Al-Br	Al-Br	Al-Br	Al-Br	50%Al	Al-Br	50%Al	Al-Br	50%Al	Al-Br	50%Al	Al-Br	50%Al
Clamp int		-0.3	-0.3	-0.3	-0.3	-0.3	-0.3	-0.3	-0.3	-0.3	-0.3	-0.3	-0.3	-0.3
Spacer int		-0.15	-0.15	-0.15	0	0	0	0	-0.025	-0.025	-0.025	-0.025	-0.025	-0.025
Radial int		0	0	0	-0.025	-0.025	-0.05	-0.05	-0.025	-0.025	-0.05	-0.05	-0.05	-0.05
Skin delta		0.3	0.3	0.4	0.3	0.3	0.3	0.3	0.3	0.3	0.3	0.3	0.3	0.3
IR Yoke shim		0.15	0.15	0.15	0.1	0.1	0.1	0.1	0.1	0.1	0.1	0.1	0.1	0.1
OR Yoke shim		0.25	0.15	0.25	0.2	0.2	0.2	0.2	0.2	0.2	0.2	0.2	0.2	0.2
M-P shim		0	0	0	0	0	0	0	0	0	0	0	0	0
R pole shim		0	0	0	0	0	0	0	0	0	0	0	0	0
R spacer shim		0	0	0	0	0	0	0	0	0	0	0	0	0
RESULTS		*	*	*	*	*	*	*	*	*	*	*	*	*
press delta=0.125mm				105(49)			171(96)	174(88)			167(93)	170(84)	130(93)	132(88)
with clamp				28(12)			87(48)	86(47)			87(45)	86(46)	87(46)	86(46)
skin on, 300K					101(62)	101(62)	127(75)	126(75)	100(60)	99(60)	126(74)	125(73)	126(74)	125(74)
delta-max					0.05	0.05	0.063	0.063	0.049	0.049	0.063	0.064	0.063	0.063
4K		114(46)	79(28)	114(45)	89(44)	96(35)	121(62)	131(57)	89(45)	96(36)	121(62)	131(58)	97(58)	89(53)
delta-max		0.223	0.207	0.223	0.209	0.21	0.225	0.226	0.209	0.21	0.225	0.226	0.227	0.228
Bmax=11T				91(40)	92(48)	90(38)	110(54)	103(48)	91(37)	89(36)	110(53)	104(48)	110(54)	103(44)
delta-max				0.194	0.194	0.195	0.21	0.211	0.194	0.195	0.21	0.211	0.211	0.212
delta X-505														
Sskin														
S1		T	T	"0"	20-T	"0"	25-C	35-C	25-T	"0"	25-C	38-C	20-C	30-C

Technologically, only second layer pole-peace can be replaced after coil reaction. Therefore, by using 50% of aluminum in substituted parts, it is possible to increase pole shrinkage at 4K and redistribute first and second layer coil stress (see coil in rigid boundary). This redistribution helps to keep coil in contact with first layer pole, which is important for field harmonics.

Table 5. Results for cases with 50% Aluminum in the pole peace at second layer.

	Only skin works		Skin+clamp+spacer+yoke shims are workin										
PARAMETERS	3	4	20	26	27	28	29	32	50	51	65	66	69
Magnet-section	REG	REG	REG	REG	REG	REG	REG	REG	REG	REG	REG	REG	REG
Mat in pole cut	Al-Br	Epoxy	Al-Br	Al-Br	Epoxy	Al-Br	Epoxy	Epoxy	Al-Br	Al-Br	Al-Br	Al-Br	Epoxy
Mat of spacer	Al-Br	Al-Br	Al	Al	Al	Al-Br	Al-Br	Al-Br	Al-Br	Al	Al-Br	Al	Al
Mat for 2 pole	50%Al	50%Al	50%Al	50%Al	50%Al	50%Al	50%Al	50%Al	50%Al	50%Al	50%Al	50%Al	50%Al
Clamp int	0	0	-0.3	-0.3	-0.3	-0.3	-0.3	-0.3	-0.3	-0.3	-0.3	-0.3	-0.3
Spacer int	1	1	1	0	0	0	0	0	0	0	-0.025	-0.025	-0.025
Radial int	0	0	0	0	0	0	0	0	-0.025	-0.025	-0.05	-0.05	-0.05
Skin delta	0.3	0.3	0.3	0.3	0.3	0.3	0.3	0.3	0.3	0.3	0.3	0.3	0.3
IR Yoke shim	0.3	0.3	0.13	0.13	0.13	0.125	0.125	0.2	0.1	0.1	0.1	0.1	0.1
OR Yoke shim	0.3	0.3	0.26	0.26	0.26	0.26	0.26	0.2	0.2	0.2	0.2	0.2	0.2
M-P shim	0	0	0	0	0	0	0	0	0	0	0	0	0
R pole shim	0	0	0	0	0	0	0	0	0	0	0	0	0
R spacer shim	0	0	0	0	0	0	0	0	0	0	0	0	0
RESULTS			*	*	*	*	*	*	*	*	*	*	*
press delta=0.125mm			140(55)	123(53)	94(50)	120(53)		92(53)			169(84)	170(84)	132(88)
with clamp				41(26)	40(25)	39(24)		39(24)			87(44)	86(46)	86(46)
skin on, 300K				87(50)	74(50)			71(48)	100(62)	101(62)	126(72)	125(73)	125(74)
delta-max				0.042	0.044			0.04	0.049	0.05	0.064	0.064	0.063
4K	157(42)	104(54)		106(43)	66(40)	104(38)	66(40)	82(44)	107(43)	96(35)	139(62)	131(58)	89(53)
delta-max	0.241	0.248		0.216	0.218	0.214	0.216	0.232	0.215	0.21	0.23	0.226	0.228
Bmax=11T	86(25)		86(34)	87(37)	86(35)	87(35)		86(35)	93(40)	90(38)	110(48)	104(48)	103(44)
delta-max	0.189		0.194	0.193	0.194	0.196		0.192	0.2	0.195	0.213	0.211	0.212
delta X-505	-0.181		-0.182			-0.183							
Sskin	435												
Sclamp			354			346							
S1	10-T		"0"	15-C	0-5-T	20-C		"0"	20-C	"0"	35-C	38-C	30-C

Table 6 shows the results for variants with Epoxy inside of the pole cut at first layer. As noted above, the grove reduces coil pick stress at the first layer by ~40-50MPa at 300K and 4K. The table is useful for comparison of coil stress in variants with different spacer material.

Table 6. Results for variants with Epoxy inside of pole grove.

	Only skin works		Skin+clamp are working	Skin+clamp+spacer are working		Skin+clamp+spacer+yoke shims are working										
PARAMETERS	2	4	9	14	15	24	27	29	35	62	52	57	62	67	68	69
Magnet-section	REG	REG	REG	REG	REG	REG	REG	REG	REG	REG	REG	REG	REG	REG	REG	REG
Mat in pole cut	Epoxy	Epoxy	Epoxy	Epoxy	Epoxy	Epoxy	Epoxy	Epoxy	Epoxy	Epoxy	Epoxy	Epoxy	Epoxy	Epoxy	Epoxy	Epoxy
Mat of spacer	Al-Br	Al-Br	Al-Br	Al-Br	Al	Al	Al	Al-Br	Al-Br	Al-Br	Al-Br	Al-Br	Al-Br	Al-Br	Al	Al
Mat for 2 pole	Al-Br	50%Al	Al-Br	Al-Br	Al-Br	Al-Br	50%Al	50%Al	Al-Br	Al-Br	Al-Br	Al-Br	Al-Br	Al-Br	Al-Br	50%Al
Clamp int	0	0	-0.3	-0.3	-0.3	-0.3	-0.3	-0.3	-0.3	-0.3	-0.3	-0.3	-0.3	-0.3	-0.3	-0.3
Spacer int	1	1	1	-0.1	-0.1	0	0	0	-0.1	-0.025	0	0	-0.025	-0.025	-0.025	-0.025
Radial int	0	0	0	0	0	0	0	0	0	-0.025	-0.025	-0.05	-0.025	-0.05	-0.05	-0.05
Skin delta	0.3	0.3	0.3	0.3	0.3	0.3	0.3	0.3	0.3	0.3	0.3	0.3	0.3	0.3	0.3	0.3
R Yoke shim	0.3	0.3	0.3	0.3	0.3	0.135	0.13	0.125	0.125	0.1	0.1	0.1	0.1	0.1	0.1	0.1
OR Yoke shim	0.3	0.3	0.3	0.3	0.3	0.27	0.26	0.26	0.25	0.2	0.2	0.2	0.2	0.2	0.2	0.2
M-P shim	0	0	0	0	0	0	0	0	0	0	0	0	0	0	0	0
R pole shim	0	0	0	0	0	0	0	0	0	0	0	0	0	0	0	0
R spacer shim	0	0	0	0	0	0	0	0	0	0	0	0	0	0	0	0
RESULTS						*	*	*	*	*	*	*	*	*	*	*
ress delta=0.125mm			107(60)*	78(50)*	85(51)*		94(50)					133(95)		132(96)	130(93)	132(88)
with clamp					32(16)*		40(25)					88(48)		88(48)	87(46)	86(46)
skin on, 300K					67(40)		74(50)			98(59)	101(64)	129(78)	98(59)	127(74)	126(74)	125(74)
delta-max					0.033		0.044			0.048	0.05	0.064	0.048	0.064	0.063	0.063
4K	92(60)	104(54)	124(81)	75(50)	105(60)	68(48)	66(40)	66(40)	59(36)	72(46)	74(47)	107(70)	72(46)	105(66)	97(58)	89(53)
delta-max	0.242	0.248	0.261	0.228	0.25	0.219	0.218	0.216	0.212	0.214	0.215	0.232	0.214	0.231	0.227	0.228
delta X-505									-0.211							
Bmax=11T					103(52)		86(35)		83(35)	94(30)	96(40)	119(55)	94(30)	117(54)	110(54)	103(44)
delta-max					0.202		0.194		0.189	0.198	0.199	0.214	0.198	0.213	0.211	0.212
delta X-505									-0.178							
delta X-59									-0.027							
delta X-3									-0.079							
LF delta X-505									0.033							
S1					15-C		0-5-T		30-T	20-T	0-10-T	20-C	20-T	25-C	20-C	30-C

Conclusions

For existing design important:

- to have an epoxy or no material at all in the pole cut of the first layer pole-insert
- to have the precise clamping procedure
- to have the yoke shimming
- to reduce shrinkage of the second layer pole-insert