Department of Energy
Office of Science
Washington, DC 20585

DEC 18 2013

MEMORANDUM FOR: JAMES SIEGRIST
ASSOCIATE DIRECTOR
OF THE OFFICE OF SCIENCE
FOR HIGH ENERGY PHYSICS

FROM: DANIEL R. LEHMAN
DIRECTOR
OFFICE OF PROJECT ASSESSMENT

SUBJECT: Final Report on the DOE/SC Review of the Muon g-2 Project, September 2013

Attached for your consideration and use is the final report on the Department of Energy/Office of Science review of the Muon g-2 project. The review was conducted September 17-18, 2013, at the Fermi National Accelerator Laboratory in Batavia, Illinois.

If you have any questions or would like to discuss the report further, please contact me.

Attachment

cc:
E. Merrill, SC-28
K. Fisher, SC-28
M. Procario, SC-25
T. Lavine, SC-25
P. Philp, DOE/FSO
M. Weis, DOE/FSO

Printed with soy ink on recycled paper

Department of Energy
Review Committee Report

on the

Technical, Cost, Schedule, and
Management Review

of the

MUON g−2 PROJECT

September 2013

EXECUTIVE SUMMARY

A Department of Energy/Office of Science (DOE/SC) review of the Muon g−2 project was conducted at the Fermi National Accelerator Laboratory (Fermilab) on September 17-18, 2013. The review was conducted by the Office of Project Assessment (OPA) and chaired by Kurt Fisher, OPA at the request of Michael Procario, Director, Facilities Division, Office of High Energy Physics. The purpose of the review was to evaluate the project's preparedness to enter the preliminary design phase.

Technical

The Committee noted that Fermilab has made significant progress in describing the dependencies between the Muon g−2 project, the Mu2e project, and the seven supporting Accelerator Improvement Projects and General Plant Projects. However, personnel leveling remains a concern throughout this scope of work, as well as the Muon g−2 project and Muon Campus activities**.**

Concerning the magnets, the Committee noted that alignment work is substantial, approximately one-third of the metrology group's capacity for the better part of a year. Care should be taken to negotiate their deployment properly so as to minimize conflict with other laboratory priorities. The Committee recommended that a plan be prepared for the use of metrology and related skilled labor.

The Storage Ring schedule shows a reduction in activities in FY 2015 and FY 2016 with little or no work in FY 2017. The "beam-on" is not scheduled to occur until FY 2017. The Committee judged that the Storage Ring team should remain intact to participate in beam commissioning.

The Committee observed that the calorimeter prototyping is advanced. Effort has focused on development of the silicon photomultipliers. This is a technological departure from past Muon g−2 experiments, but is taking advantage of new technology and the R&D effort is close to completion. The detector design, costing, and schedule are at the level of or exceed the level expected for CD-1; the management team is to be commended for this.

One significant observation made by the Committee was that the Final Design has been delayed in the project schedule to fit the funding profile, leaving a one-year gap between preliminary and final design tasks. Also it was noted that the Storage Ring plan includes many

instances of early risk reduction by testing of existing subcomponents prior to full installation. The estimate uncertainty for many of the engineering related tasks remains at the expert opinion (60%) level, which may be too conservative for tasks with a minimal amount of new engineering effort (i.e., new design). Reducing this uncertainty between CD-1 and CD-2 may present opportunities for additional scope or early completion of tasks that have been delayed due to the proposed funding profile.

Cost and Schedule

The Committee was informed that the preliminary DOE total project cost is $47.9 million including $10 million estimate uncertainty contingency and $2.4 million risk-based contingency. Total project contingency is approximately $12.4 million (approximately 41% of to-go costs). The proposed CD-1 cost range is $43-50 million.

The project prepared a preliminary resource-loaded schedule reflecting Office of High Energy Physics funding guidance. Financial impact to the schedule results in $2 million in Final Design work delayed to FY 2015 and $7 million in accelerator work delayed to FY 2017.

Management

The Committee noted that there is a strong management team in place. However, it is difficult to optimize the current schedule with the guidance of the DOE funding profile. If future cost experience is good, contingency may be earned and items may be added from the registry of risks and opportunities.

The uncosted resources were identified and amounted to $13 million. The Committee suggested that the project team may consider annual statements of work with all collaborating institutes in order to secure the needed resources in a timely fashion.

There is currently no scope contingency identified. Scope contingency (potential reductions and enhancements) should be identified prior to CD-2.

The project team has considerable and appropriate experience in designing and implementing accelerator improvement projects, and continues to gain experience and training in DOE project management skills. The Committee noted that due to funding issues, a number of accelerator activities have been delayed into the final year (FY 2017)—the Committee is concerned that this may lead to schedule issues, and every effort should be made to bring appropriate FY 2017 work scope forward. The Committee recommended that the project proceed to CD-1 after addressing the recommendations in the report.

CONTENTS

Executive Summary i
1. Introduction 1
2. Technical Systems Evaluation 3
   2.1 Beamline 3
   2.2 Storage Ring 5
   2.3 Detectors 9
   2.4 Engineering 12
3. Cost and Schedule 15
4. Management 17

Appendices

A. Charge Memorandum
B. Review Participants
C. Review Agenda
D. Schedule Chart
E. Management Table

1. INTRODUCTION

One of the more persistent hints of new physics has been the deviation between the measured muon anomalous magnetic moment, (g−2)/2, and its Standard Model expectation, where both are currently determined to a precision of 0.5 parts per million. This fundamental measurement has been pursued for decades with increasing precision. The discrepancy of several standard deviations that, if true, could be caused by the quantum effects of virtual particles too massive to be produced and detected directly has been interpreted to point toward several attractive candidates for Standard Model extensions such as supersymmetric particles, extra dimensions, or a dark matter candidate. Because a precision measurement of g−2 is sensitive to virtual particles, it offers a strategic opportunity to probe areas of TeV-scale physics beyond the reach of the Large Hadron Collider (LHC). Should the LHC discover new physics that would confirm the g−2 discrepancy, then precise determination of g−2 is expected to provide direct measurements of the coupling constants of the new particles responsible for the discrepancy, fundamental parameters of the underlying theory, and a window on the underlying symmetries of the new physics. For many possible cases, it is expected that these parameters will not be measured with adequate precision at the LHC alone.

The experimental technique involves measuring the precession frequency of the muon spin vector in a well-understood magnetic field; in this case the spin vector will be reconstructed from the angular distribution of muon-decay electrons in a storage ring and the precession of the spin vector in the storage ring's magnetic field will be tracked over time. The prior g−2 experiment at Brookhaven National Laboratory (BNL Experiment E821) ended with a successful, statistics-limited measurement of g−2 and is one of the most heavily cited High Energy Physics (HEP) experiments, with more than 2,000 citations.

The mission for a new g−2 experiment was obtained at Critical Decision (CD) 0, Approve Mission Need, by the Director of the Office of Science in September 2012. A conceptual design and preliminary Project Execution Plan have been developed. The project is moving the existing muon storage ring from BNL to Fermi National Accelerator Laboratory (Fermilab) where it will be reused, with improvements, to make more precise measurements in a dedicated secondary muon beam created at Fermilab. The superconducting electromagnetic coils of the storage ring, 15 meters in diameter, were transported 3,200 miles from BNL to Fermilab in July 2013 by barge and truck. By virtue of having run the original apparatus for five years, the required technology and physics principles have been tested and demonstrated. Additionally, much of the expertise involved with the initial construction of the experiment is still available and remains involved, along with a number of new collaborators, for the new Muon g−2 experiment at Fermilab (FNAL Experiment E-989).

Intentionally Blank

2. TECHNICAL SYSTEMS EVALUATION

2.1 Beamline

This scope of work of the Muon g−2 project primarily addresses beam lines, controls, and instrumentation, and the target station that provides the secondary pions. Also included is the supporting accelerator physics design work.

The muon campus is an integrated effort of which the g−2 project is one aspect. Fermilab has made an effort to clearly articulate all of the dependencies and interfaces between the two major projects: Muon g−2 and Mu2e, and the seven Accelerator Improvement Project (AIP) and General Plant Projects (GPP), which are needed to provide the full capabilities. At this review these interfaces were well described.

The scope of work in this section is primarily:

- The target station and final focus of the beam upstream of the target.
- The beamline that delivers this secondary beam to the delivery ring.
- The injection and extraction region of the delivery ring relevant to g−2.
- The beamline, which delivers beam to the g−2 ring.
- Controls and instrumentation to support the above.

2.1.1 Findings

There are 165 magnets involved in this scope of work. Of these, 152 are simply being moved from their present locations to their new locations with minimum rework. One is being completely reworked by the Technical Division, and 12 are being fabricated. Those being built are largely copies of existing designs.

The target system (target, Lithium Lens, and pulsed magnet) is reusing as much of the pbar target hardware as possible. Yield studies have shown that sufficient pions can be created for use by g−2. However yield studies will continue leading to CD-2. Several changes are needed, driven by the more demanding repetition rate of g−2. This higher repetition rate will require upgraded power supplies for the lithium lens and pulsed magnet.

The target beam dump will be replaced, due to a water leak that developed following Tevatron operation. It will be replaced by one of the same design. This was determined to be the most cost effective approach.

A review of the Conceptual Design Report, and a Director's Review of the project have recently taken place. This Committee considered and used these review reports in evaluating the charge.

This work scope is providing controls for the g−2 project, as well as for other needs within the Muon Campus. Safety system interlocks are included in this scope of work.

Instrumentation is being reused, where possible, from the antiproton source, other Fermilab projects and from BNL.

2.1.2 Comments

Fermilab made significant progress in describing the dependencies between the g−2 project, the Mu2e project, and the seven supporting AIPs and GPPs.

The Muon Campus plan continues to be developed and leadership roles are being defined. These developments appear to strengthen the integration of the DOE projects and the supporting AIPs and GPPs.

Diagnostics are well planned and adequate for commissioning and operation.

Risk analysis is mature for this stage of project.

Effort leveling remains a concern throughout this scope of work, as well as the g−2 project and muon campus activities. This is a Fermilab-wide issue that needs constant attention to efficiently move people off, and then back on to various project funding sources.

Ensure a method of physics design verification, using an appropriate combination of independent evaluation, detailed technical reviews, etc.

Although safety issues are being considered at this phase of the project, ensure that there is communication with those who will prepare the Safety Assessment Document (SAD) and ultimately carry out the Accelerator Readiness Reviews (ARR).

Value engineering has been taken into account in most aspects of this scope of work. The Committee viewed these actions as sensible and did not think they will compromise the project deliverables. Further opportunities for cost savings have been identified and are being explored.

Drill downs in this area into the Basis of Estimates (BOEs) revealed credible estimates. Two categories were evaluated; one focusing on procurements, and another looking at effort intensive activities.

Due to funding issues, a number of accelerator activities have been pushed into the final year. The Committee was concerned that this may lead to schedule issues, and every effort should be made to bring appropriate FY 2017 work scope forward.

2.1.3 Recommendation

1. Proceed with CD-1 approval.

2.2 Storage Ring

The Muon g−2 storage ring magnet is a large monolithic superferric magnet made up of three coils, each in its own cryostat, and a large 'C' cross-section steel pole/yoke assembly. The magnet cryostats from the prior BNL experiment were carefully transported from BNL to Fermilab for this new experiment in mid-2013. The project must now reassemble, test, adjust, and calibrate the magnet. This g−2 magnet is the single most critical element for this experiment and its good performance is paramount.

The g−2 project storage ring effort is listed under WBS 476.03. During the course of the review technical and project management aspects of this effort were presented and discussed. The storage ring project effort is well understood and well planned. The project is ready for CD-1, Approve Alternative Selection and Cost Range.

2.2.1 Findings

The successful use of the storage ring, as it will be configured at Fermilab requires greatly increased statistics and greatly improved control of systematic errors (compared to the decade-old g−2 experiment at BNL). Improved calibration precision and stability are two key elements required to reduce systematic error. In preparing the storage ring at Fermilab, the project team will endeavor to flatten or 'shim' the field to a very tight tolerance so the integrated field that each muon passes through, on each turn in the storage ring, is precisely known with respect to standard references to better than 1 ppm. Various nuclear-magnetic-resonance (NMR) field sampling instruments will be used to make sure the field does not change throughout the experiment.

The storage ring team brings experience from the prior BNL Experiment and, while retaining and re-applying much of their technique, they also intend to develop new procedures and apply lessons-learned. Beneficial occupancy of the storage ring enclosure building, MC-1, is foreseen in February 2014. Comprehensive analysis and adjustment of the magnet is expected to take place during the period of February 2014 to February 2015.

The storage ring schedule shows effort turn-down in FY 2015 and FY 2016 with little or no work in FY 2017.

Magnet

Following the 2013 Director's Review, an alignment task force was established with charge to:

1. Discuss the requirements and technical issues to develop a coherent alignment strategy.
2. Write a central summary document in preparation for the September 2013 CD-1 review.
3. Prepare a step-by-step detailed explanation of the work in order to refine the metrology labor efforts.

Item 2, above, is especially important since the alignment effort is linked to several WBS 476.03 elements. Full integration of WBS 476.03 work is therefore best accomplished when the alignment is planned and scheduled in relatively high detail.

The project alignment work is substantial, amounting to about one-third of the Fermilab metrology group's capacity for the better part of a year.

Inflector

Inflector magnet development may help muon beam capture in the storage ring. Rutherford Appleton Lab (RAL) submitted a funding proposal to provide a new inflector as an in-kind contribution, which provides an opportunity for the project to work with experts at Fermilab, BNL and RAL to develop a plan to partner with the United Kingdom to design and fabricate a new inflector.

The inflector geometry is extremely constrained so a new device must fit the existing 'footprint' exactly. The project team reported that it would be impossible to make adjustments to the existing geometry.

Kicker

The kicker field in the prior BNL experiment would not meet the specification for the new Fermilab experiment. A new kicker system under development by Cornell collaborators has a modified stripline shape that should increase the kick significantly with the same voltage and current. It should be able to meet Fermilab's performance specifications.

Beam Diagnostics

The project is considering ways to reduce CBO (coherent betatron oscillation) in the storage ring, including active feedback. CBO is a possible source of significant error because the oscillation frequency lies close to a harmonic of the frequency of interest. Non-destructive pick-up electrode diagnostics were attempted in the BNL experiment but failed to work because of electromagnetic interference from the kicker pulse. (See Comments section.)

2.2.2 Comments

Beam-on is not scheduled to occur until FY 2018. This means that, following an intensive calibration effort in CY 2014, the storage ring magnet will be operated and tested only incidentally, i.e., as needed for installation and commissioning of other systems, or may be placed in a dormant state. The storage ring team should remain intact to participate in g−2beam commissioning for the experiment and make sure it goes smoothly. Resources (staff and funding) are required for ongoing testing and to maintain the ring in good working condition. These are not listed as part of the project but are assumed to be operations. Consumables, for example cryogens and spares, will be required in addition to key staff.

Magnet

Fermilab has embarked on a number of construction and development projects in parallel. These must of course be coherently managed. Metrology resources are a precious commodity and care should be taken to negotiate their deployment properly so as to minimize conflict with other laboratory priorities.

Inflector

A substantial performance increase may be possible and the project should be encouraged to solicit and make effective use of this offer of help. However, this contribution does not come

without cost. On-project integration resources, possibly significant, would be required to make sure the device functions properly in the system.

Kicker

The kicker is a very high-voltage, high-current device deployed in a facility full of high sensitivity, precisely calibrated equipment. Electromagnetic interference from kicker operation may seriously reduce the performance of instrumentation electronics. Even though the kicker pulse repetition frequency is no more than 120 Hz, electrical disturbances caused by the kicker pulse may last a long time, possibly the full 8.3 ms inter-pulse period. Care must be taken to match the pulser properly to the stripline. Care also must be taken to minimize coupling between the kicker and surrounding electronics. Both of these criteria require extensive in-situ testing. This is required and must be included in the plan.

Beam Diagnostics

CBO should be reduced using whatever means possible. Non-destructive beam diagnostic techniques should be developed and used. Experts in noise reduction and beam-signal processing should be consulted for this work.

2.2.3 Recommendations

2. Prepare a plan for transition to storage ring operations including staffing and funding requirements and present it at the next review.

3. Prepare a plan (resource-loaded schedule) for the use of metrology and related skilled labor and present it at the next review.

2.3 Detectors

2.3.1 Findings

The detector scope consists of all instrumentation required to measure the muon precession frequency. It includes calorimeters to measure position, energy, and time from which the precession frequency is extracted; tracking and other auxiliary detectors to measure the characteristics of the muon beam, which is used to make corrections to the precession frequency and constrain systematic; and readout electronics, data acquisition, and slow controls. The

Detector team gave presentations on the Level 3 systems: calorimeter, tracker, back-end electronics, fast data acquisition (DAQ), auxiliary detectors, and slow controls. Systems descriptions and performance expectations, and current design status were shown, along with collaborating institution construction responsibilities.

For the calorimeter, a fast crystal, PbF_2, which is a Cherenkov radiator, has been selected after several beam tests. The design introduces improved segmentation. Effort has focused on improved photo-sensors, with silicon photomultipliers (SiPMs) as the sensor of choice. This sensor requires attention to environmental conditioning. The calorimeter includes front-end electronics, mechanical housings and support structures, low voltage distribution and a laser calibration system.

The Tracker is designed to measure the muon beam profile in at least two positions around the ring. Each position consists of 11 independent stations of a doublet of U and V (narrow angle stereo, offset from vertical) straw tubes. The Tracker includes front-end electronics, high voltage, and gas systems.

Calorimeter back-end electronics includes waveform digitizers (WFD), micro-TCA crate development and procurement, and a clock distribution system. The system is designed to provide continuous digitization of each muon fill, digitizing the waveform for transfer to the DAQ. The Wave-Form Digitizer (WFD) requirements include 500 mega samples per second (MSPS) minimum digitization rate, 200 MHz bandwidth with 12 bit sampling analog digital converter (ADC). The ADC is being donated by Texas Instruments.

Fast DAQ includes control, readout, processing, monitoring and storage of the data from the 24 calorimeter stations, two tracker stations, and several auxiliary detector systems (T-zero counter, fiber harp, and electric quadrupoles).

Cost estimates were presented. BOE, including contingencies, were examined in detail for calorimeter calibration, backend electronics, and tracker. Funding sources (DOE project, DOE Early Career Award, and the National Science Foundation, NSF) were identified for each WBS Level 4 element. The NSF Major Research Instrumentation (MRI) award will fund most of the calorimeter, backend electronics, and DAQ. The DOE project includes the calorimeter calibration system, micro-telecommunications computing architecture (TCA) crates, control room monitors, auxiliary detectors and slow controls. The DOE Early Career Award covers the tracker and tracker front-end DAQ. The MRI is funded at $3.6 million, including 24% contingency. The Early Career Award provides $1.46 million toward the tracker costs, including 49% contingency. The DOE Project detector total is $1.08 million, including 29% contingency.

Primavera P6 and COBRA schedules, and the process for generating the schedule, were presented. Milestones to track detector systems progress have been established and appear in the master schedule.

ES&H considerations were presented by each of the Level 3 managers.

2.3.2 Comments

The detector conceptual design satisfies the performance requirements. The Detector team has significant expertise from the prior g−2 experiment, as well as other similar experiments. They have the knowledge, experience, and design skills to produce a credible technical, cost, and schedule baseline. The documentation required by DOE, satisfying DOE Order 413.3B, is ready for approval.

The detector design, costing, and schedule are at the level (or exceed the level) expected for CD-1. The detector management team is to be commended for this.

Calorimeter prototyping is advanced. Effort has focused on development of the photo-sensors, the SiPMs. This is a technological departure from past Muon g−2 experiments, but is taking good advantage of new technology. The R&D effort is close to completion. Calorimeter mechanical engineering is at a conceptual design (CD-1) level, not yet a CD-2 level.

The active material for calorimetry, PbF_2, has been selected and a handful of prototypes characterized. Crystals from a single vendor have been the focus of effort. This vendor has a history of reliability and favorable pricing, and the number of crystals to be produced should not tax the vendor's production abilities. However, the project team should seek out additional vendors for availability and pricing, as a backup solution. Before going out for final crystal production and SiPM procurement, the project team should hold an expert's review of the design solution.

NSF has funded the bulk of the calorimeter effort. The matching funds contributions to the MRI in the calorimeter area are guaranteed by the University of Washington.

The design of the back-end electronics is conservative and provides headroom for expanded capability. This Level 3 system is in good shape. The ADC, a major cost item of the WFD, will be provided gratis by Texas Instruments. The funding agency for this work is NSF. The matching funds contributions to the MRI in the electronics area are guaranteed by Cornell University.

The Tracker uses mylar straw tubes, a mature technology. Mechanical engineering for this system relies on student effort at Northern Illinois University (NIU), backed by review of designs by experienced Fermilab engineers. This seems to be working, and is an innovative way to contain design costs. There is risk here: if Fermilab engineering is needed, it may not be immediately available. The production of the mylar straws will piggy-back off the larger Mu2e straw production order. Funding for the Tracker effort comes from the Level 3 Manager's Early Career Award, and should be adequate.

The Fast Data Acquisition system uses the MIDAS framework. This system is not at this time supported by Fermilab. However, many members of the collaboration have extensive experience with this system. This framework also provides a solid basis for support of Slow Controls. The Committee feels that the team has made a reasonable choice here.

Components of the auxiliary detector set, as well as detectors from the last generation of Muon g−2, are at BNL. The project team should make and execute plans to transfer these items to Fermilab as soon as possible.

The cost estimates for the systems appear to be reasonable. The Committee drilled down in several BOEs (Calorimeter Calibration, Backend Electronics, and Tracker). The BOE technology, backed up by detailed documents, provides adequate detail to justify the costs. The managers are familiar with, and adept at, using these estimate tools. The project team has a good sense of the change control process, and uses it.

The schedule is based on inputs from the managers. With full funding in hand for the NSF MRI, funding effects on schedule are less onerous. The schedule contains adequate milestones for reviews. The project team should develop a 'review' strategy for incorporating external expert reviewers for critical reviews.

The test beam activities in FY 2014 at SLAC National Accelerator Laboratory (SLAC) are critical to the Detector.

The management team should give consideration to backup plans. R&D has gone well. Procurement and construction may also go well, but there are likely to be glitches, and backup plans will help to deal with these.

2.3.3 Recommendation

4. Proceed with CD-1 approval.

2.4 Engineering

2.4.1 Findings and Comments

The project presented a level of preparation consistent with and in some cases exceeding the requirements of a conceptual design. The requirements for each of the subsystems are clearly documented and well understood by the subsystem teams. There are elements of each subsystem that have proceeded beyond the conceptual design, due to reuse of the hardware from the prior Brookhaven g−2 experiment. The Value Engineering effort associated with reuse of the hardware is evident in all the subsystems reviewed.

The Fermilab g−2 project organization is well defined and each subsystem identified resources with the appropriate disciplines and level of experience to support the current scope of work. The mechanical and electrical engineering effort is clearly identified in the subsystem BOE's and appears to be consistent with the complexity of the work and the current project schedule. The one exception is that the Final Design task has been delayed in the project schedule to fit the current funding profile, leaving a one year gap between the Preliminary and Final Design tasks. This disconnect presents a concern in maintaining the experienced engineering staff at the appropriate level during the period between the two key tasks. The project recognizes the issue but did not present a plan to mitigate any potential risks of losing key engineering personnel.

The project presented detailed schedule and cost information consistent with the requirements of DOE Order 413.3B CD-1 requirements. A large fraction of the engineering effort is the refurbishment and reuse of the Brookhaven g−2 experimental hardware. The drill-down into the BOE for engineering tasks for the Storage Ring showed a sufficient level of detail that the estimates were credible for the current work scope. However, the estimate uncertainty for many of the engineering tasks remains at the expert opinion level (60% uncertainty), which seems too conservative for tasks with a minimal amount of new engineering effort (i.e., new design). The project should review and evaluate the uncertainty between CD-1 and CD-2. Reducing the uncertainty may present opportunities for early completion of tasks that have been delayed due to the funding profile (e.g., Final Design).

The project is fortunate to have a number of scientists who worked on the prior BNL experiment and bring detailed knowledge and experience with the experiment subsystems. This will help guide the improvement and upgrade of the experimental hardware for the Fermilab g−2 project. The Storage Ring plan includes many instances of early risk reduction by testing of

existing subcomponents prior to full installation. The project is encouraged to consider identifying additional risk reduction activities, should there be unanticipated delays in other Accelerator Improvement Projects that impact the start of installation.

2.4.2 Recommendation

5. Develop a definitive plan for delivery of all of the remaining hardware from BNL prior to CD-2. This may provide additional opportunity for early risk retirement that should be identified in the project schedule at CD-2.

Intentionally Blank

3. COST and SCHEDULE

3.1 Findings

Muon g−2 PROJECT STATUS as of August 2013		
Project Type	MIE	
CD-1	Planned: 1st Q FY14	Actual:
CD-2/3a	Planned: 3rd Q FY14	Actual:
CD-3b	Planned: 3rd Q FY15	Actual:
CD-4	Planned: 4th Q FY18	Actual:
TPC Percent Complete (based on point estimate)	Planned: %	Actual: 11.5%
TPC Cost to Date	$5.5M	
TPC Committed to Date		
TPC range	$43M-$50.1M	
TPC point estimate	$47.9M	
Contingency Cost (w/Mgmt Reserve)	$12.37	41.2% to go
Contingency Schedule on CD-4	12 months	25%
CPI Cumulative		
SPI Cumulative		

The project prepared a preliminary resource-loaded schedule reflecting Office of High Energy Physics (OHEP) funding guidance. Financial impact to the schedule results in $2 million in Final Design work delayed to FY 2015 and $7 million in accelerator work delayed to FY 2017.

The preliminary project schedule includes contributed (NSF and Early Career Award or ECA) activities and identifies critical milestones related to Muon Campus activities.

The project schedule includes 12 months of schedule contingency to CD-4 (approximately 25%), as well as six months of schedule contingency to the Level 1 milestones and three months of schedule contingencies to Level 2 milestones.

The preliminary DOE total project cost is $47.9 million including $10 million estimate uncertainty contingency and $2.4 million risk-based contingency. Total project contingency is approximately $12.4 million (approximately 41% of to-go costs). The proposed CD-1 cost range is $43-50.1 million.

The DOE Base Cost is $35.574 million, the Early Career Award is $980K and the NSF is $3.085 million. The total base program is $39.638 million.

The base estimate is 45% materials and services and 55% labor. The estimating methodology documents the project rules for estimating and applying contingency.

The project includes minimal scope contingency.

3.2 Comments

The cost contingency is time-phased in the project schedule and appears reasonable at 41% of to-go costs. The overall cost estimate is detailed and mature for this stage of the project and the process used to develop the estimates is documented and credible. The project is using estimating assumptions that appear to result is a conservative estimation of the Total Project Cost (TPC). The project should continue to further develop and refine the estimates for CD-2.

Two drill-down exercises of the Ring and Accelerator clearly demonstrated the project team's knowledge of how cost estimates were developed and documented. Each team described their process of developing their cost estimates for each WBS and described in detail all required steps to completed the WBS. The documented details included a description of the WBS task, listed in detail all steps required to complete the WBS, and listed the resources required (labor hours and M&S costs). Estimates developed by various means; i.e. engineering; vendor quotes and estimates; and opinions.

The schedule contingency appears reasonable for this stage of the project. The preliminary resource loaded schedule is well-developed and detailed but appears sub-optimized due to funding constraints. A technically-driven schedule is preferred; OHEP and the project should continue to evaluate funding options/alternatives to eliminate these constraints.

The project expects several in-kind contributions from international collaborators before CD-2 including a new inflector, crystals, and laser calibration system. The project has adequately planned for these by ensuring that they are additional scope that will mitigate any cost risks. The project should confirm these contributions, but also continue to pursue additional contributions that may enhance performance and incur cost savings.

3.3 Recommendations

6. Continue to refine the cost estimates and project schedule prior to CD-2.

7. Proceed with CD-1 approval.

4. PROJECT MANAGEMENT

4.1 Findings

The project management team presented the Work Breakdown Structure (WBS) and the resource loaded schedule (RLS). The documentation was complete and of a sufficient granularity at this stage of the g−2 project. The schedule, as shown, was contingent on a draft funding profile. The cost estimate had a full contingency analysis applied with full granularity. A critical path was shown in a technically limited scenario. The project has rapidly integrated the DOE, NSF, and other resource types into a coherent, unitary effort.

4.2 Comments

The uncosted resources were identified and amounted to $13 million. This is a potential exposure but it also indicates the level of commitment of the Muon g−2 Collaboration. Forward funding should be explored within the Collaboration. There is currently no scope contingency identified. Scope contingency (both potential reductions and enhancements) should be identified prior to CD-2.

It is difficult to optimize the schedule with the guidance of the DOE funding profile. The interface milestones with the Accelerator Division (AD) is a useful and necessary tool, especially as the AD is 60% of the project. The project may consider interior dependencies across Level 2 or Level 3 and add interface milestones. The project may consider annual statements of work with all collaborating institutes in order to secure the needed resources in a timely fashion.

Drilldown exercises were performed successfully. The team “owns” the BOE and WBS. The boundary between project installation and commissioning tasks should be well defined and agreed to prior to CD-2. The project has begun to track actuals. This is very useful to follow cost experience. To date, cost experience has been good. If future cost experience is good, contingency may be earned and items may be added from the Risk Registry.

Prior to CD-2 the project should resource level the funding constrained fiscal years to identify the critical path activities. The project should reconsider the gap in design work or identify it as a project risk. The tracking granularity appears to be about $300K. That may be a bit too coarse to follow the cost experience on a given WBS item. Consider tracking actuals at a lower WBS level prior to CD-2. Labor experience for refurbishment and repair should be closely

monitored as the cost implications are large. Consider holding a Procurement Readiness Review and an Installation Readiness Review for large cost items.

4.3 Recommendations

5. Prior to CD-2, work with the agencies to define a more effective schedule, without design gaps and without AD work being back loaded to FY 2017.

6. Using FY 2014 spending experience review future project cost estimates to ensure appropriate base and contingency estimating prior to CD-2.

7. Finalize the required DOE documents for CD-1 and proceed to CD-1.

APPENDIX A

CHARGE MEMORANDUM

Department of Energy
Washington, DC 20585

AUG 13 2013

MEMORANDUM FOR DANIEL LEHMAN, DIRECTOR
OFFICE OF PROJECT ASSESSMENT

FROM: MICHAEL PROCARIO, DIRECTOR
FACILITIES DIVISION
OFFICE OF HIGH ENERGY PHYSICS

SUBJECT: Request to Conduct CD-1 Review of the Muon g–2 Project

I request that your Office conduct an Independent Project Review of the Muon g–2 Project on September 17–18, 2013 at Fermilab, in order to confirm the thoroughness of the conceptual design and cost range for Critical Decision CD-1. In your review, please evaluate whether the Project is prepared to enter the next phase, preliminary design. In performance of a general assessment of progress, current status and the identification of potential issues, the committee should address the following specific items:

1. Does the conceptual design satisfy the performance requirements?
2. Do the conceptual design report and documentation appropriately support the stated cost range and project duration?
3. Does the proposed project team have appropriate management experience, design skills and Laboratory support to produce a credible technical, cost and schedule baseline?
4. Are ES&H aspects being properly addressed and are future plans sufficient given the project's current stage of development?
5. Is the documentation required by DOE, satisfying Order 413.3B, ready for approval of CD-1?

As the program manager for the Muon g–2 Project, Dr. Theodore Lavine will serve as the Office of High Energy Physics contact person for this review.

We appreciate your assistance in this matter. As you know, these reviews play an important role in our program. I look forward to receiving your Committee's report.

cc: Patricia Dehmer, SC-2
James Siegrist, SC-25
Theodore Lavine, SC-25
Alan Stone, SC-25
John Kogut, SC-25
Nigel Lockyer, FNAL Director
Gregory Bock, FNAL Associate Director
Stuart Henderson, Associate Director
Chris Polly, Project Manager
Paul Philp, FSO, Federal Project Director
Michael Weis, FSO Site Office Manager

Printed with soy ink on recycled paper

APPENDIX B

REVIEW PARTICIPANTS

Department of Energy / Office of Science Review (CD-1) of the
Muon g-2 Project
September 17-18, 2013

Kurt Fisher, DOE/SC, Chairperson

SC1 Beamline	SC2 Storage Ring	SC3 Detectors
Rod Gerig, ANL	* Marc Ross, SLAC	* Bill Wisniewski, SLAC

SC4 Engineering	SC5 Cost and Schedule	SC6 Project Management
Ken Fouts, SLAC	* Ethan Merrill, DOE/SC	* Dan Green, Retired, FNAL
	Frank Gines, DOE/ASO	Jeff Sims, ANL

Observers

Jim Siegrist, DOE/SC
Alan Stone, DOE/SC
Ted Lavine, DOE/SC
Tim Bolton, DOE/SC
John Kogut, DOE/SC
Paul Philp, DOE/FSO
Pepin Carolan, DOE/FSO
Alan Harris, DOE/SC
Mark Bollinger, DOE/FSO
Michael Weis, DOE/FSO
Robin Noyes, DOE/APM

LEGEND

SC Subcommittee
* Chairperson

Count: 9 (excluding observers)

APPENDIX C

REVIEW AGENDA

Department of Energy / Office of Science Review (CD-1) of the
Muon g−2 Project
September 17-18, 2013

AGENDA

Tuesday, September 17, 2013—Wilson Hall Comitium and One West

8:00 am	DOE Executive Session—**Comitium (WH2SE)**	K. Fisher
8:50 am	Welcome—**One West (WH1W)**	J. Anderson
9:00 am	Introduction and the Fermilab Context	S. Henderson
9:25 am	Project Overview	C. Polly
10:15 am	Break	
10:30 am	WBS 476.2 Accelerator	M. Convery
11:00 am	WBS 476.3 Ring	H. Nguyen
11:30 am	WBS 476.4 Detectors	B. Casey
12:00 pm	Lunch	
1:00 pm	Subcommittee Breakout Sessions	
	—Project Management	Comitium (WH2SE)
	—Accelerators	Snake Pit (WH2NE)
	—Ring	Black Hole (WH2NW)
	—Detectors	Racetrack (WH7XO)
3:00 pm	Break	
3:15 pm	Subcommittee Breakout Sessions Continued	
5:00 pm	DOE Full Committee Executive Session	K. Fisher
6:30 pm	Adjourn	

Wednesday, September 18, 2013

8:00 am	Subcommittee Breakout Sessions Continued	
10:00 am	Break	
10:15 am	Response to Questions—**Comitium (WH2SE)**	
12:00 pm	Working Lunch (Executive Session/Report Writing)	
2:00 pm	DOE Full Committee Executive Session Dry Run	K. Fisher
4:00 pm	Closeout Presentation—**Curia II (WH2SW)**	
5:00 pm	Adjourn	

APPENDIX D

SCHEDULE CHART

Preliminary Muon g−2 Project Schedule

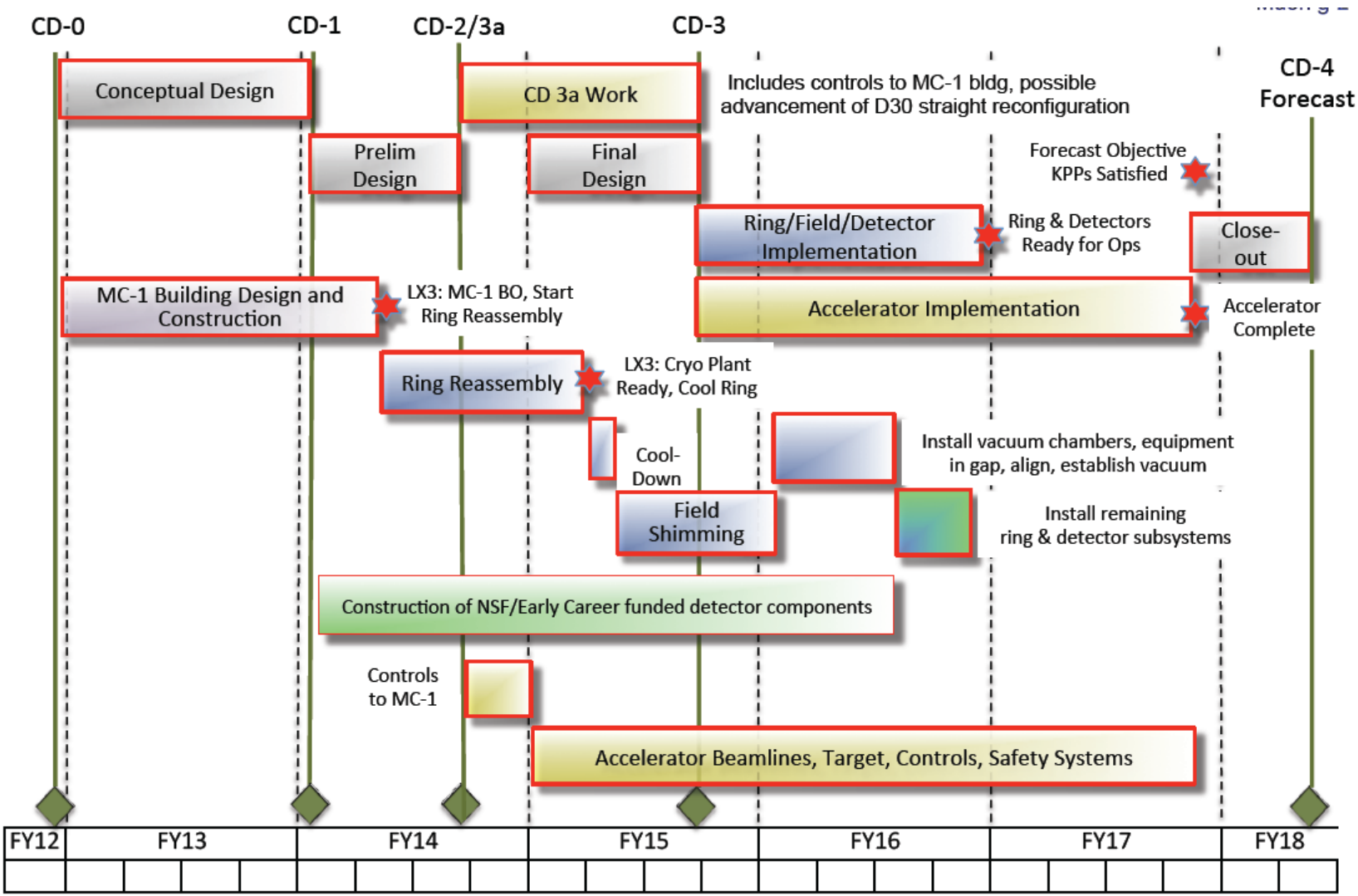

APPENDIX E

FUNDING CHART

Proposed Muon g−2 Funding Profile

The project was asked to make a plan that was restricted to the DOE funding guidance in fiscal years FY 2013 through FY 2016 and to include, in FY 2017, any additional work and funding needed that would not be possible under the restrictive funding guidance.

	FY13	FY14	FY15	FY16	FY17	Total
Total	6.5	9.0	12.1	9.2	11.1	47.9
Guidance	6.5	9.0	12.1	9.2	3.2	40.0
Surplus/Deficit	0	0	0	0	-7.9	-7.9
CONT on WR	66%	36%	41%	37%	47%	41%

APPENDIX F

MANAGEMENT CHART
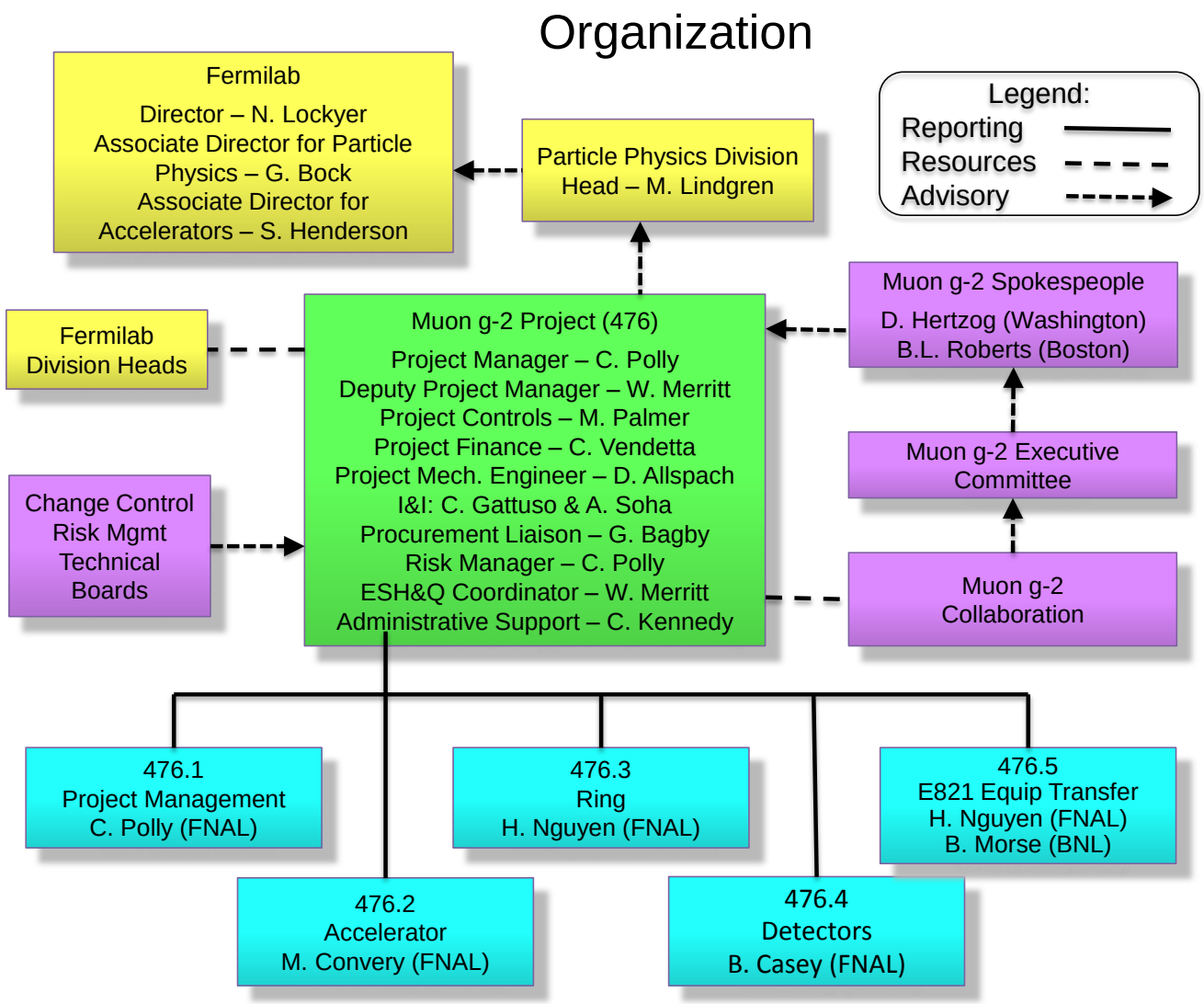
Muon g−2 Organization Chart