SUBJECT:	FERMI RESEARCH ALLIANCE PROCEDURES PROJECT MANAGEMENT	NUMBER:	12.PM-004
RESPONSIBILITY:	Office of Project Management Oversight	REVISION:	4~~3~~
APPROVED BY:	Head, Office of Project Management Oversight	EFFECTIVE:	03/08/12~~29/17/09~~
TITLE	**Project Scheduling**		

DRAFT FOR DISCUSSION

1.0 PURPOSE

This document describes the formal process for implementing the planning and scheduling requirements defined in the FRA *Earned Value Management System Description* document.

2.0 SCOPE

This procedure defines the scheduling approach and identifies the requirements and responsibilities for the development of plans and schedules for FRA projects where DOE Order 413.3B~~A~~, "Program and Project Management for the Acquisition of Capital Assets," is required, or for projects where an Earned Value Management System (EVMS) is deemed appropriate. The terms activity, task, and work package are synonymous.

3.0 RESPONSIBILITIES

3.1 Project Manager (PM) is responsible for

- establishing project technical requirements and criteria to meet customer needs
- developing the project work scope by using appropriate design and engineering services to create a technical description
- defining the WBS, WBS Dictionary, OBS, and RAM for their project for internal control and for external reporting
- working with the customer and Laboratory management to establish programmatic milestones
- working with the Control Account Managers (CAMs) to establish intermediate milestones
- working with the Control Account Managers and Fermilab functional line management to identify the resources for the project
- maintaining the WBS, WBS Dictionary, OBS, and RAM as controlled documents
- ensuring the preparation of drawings, specifications, procurement documents, installation and test instructions, and other documents to establish and record the project configuration, including as-built documentation
- implementing the project controls systems
- establishing and mediating interfaces between control accounts

3.2 Control Account Manager (CAM) is responsible for

- developing the required list of activities and intermediate milestones associated with each of their control accounts
- specifying the nominal duration for each activity
- specifying the detailed labor, material, and subcontract resource assignments for each activity
- specifying risks, uncertainties, and to the extent possible, mitigation strategies

- specifying the desired predecessor–successor relationships between activities and milestones
- specifying target dates or other constraints for each activity and/or milestone, if needed
- providing supplementary notes for control accounts, as needed

3.3 Project Controls is responsible for

- setting up the framework for the resource-loaded project schedule utilizing the scheduling software designated for the project
- entering schedule-related information provided by each Control Account Manager into the scheduling program/database
- entering additional activity information required for integration with the earned value reporting software into the scheduling program/database
- performing time analysis and budget/cost calculations using the scheduling and cost processor software
- working with the Control Account Managers and other senior project managers to analyze and develop the schedule and budget to match resource and funding availabilities and arrive at a credible Performance Measurement Baseline (PMB)
- updating the Performance Measurement Baseline schedule through the change control process throughout the project life cycle
- updating the forecast schedule and any associated revisions to the Estimate To Complete (ETC) to develop the new Estimate At Completion (EAC).
- collecting and entering schedule progress information into the scheduling program throughout the project lifecycle
- providing schedule reports to CAMs and senior project management

3.4 Functional Managers are responsible for

- Reviewing activities involving their organizations, including identifying and establishing durations and relationships

4.0 PROCEDURE

4.1 General

A formal, documented, consistent, and tailored approach is used for scheduling project work. Using a tailored approach allows the level of planning and scheduling control to be balanced against the project work.

During project scheduling, the Project Manager and CAMs will identify internal and external project conditions that could impact the project, including critical resource availabilities, funding, and collaborative support. Once the schedule preparation activities are completed, the final product is an approved Performance Measurement Baseline schedule that is used to compare against actual performance. This baseline is maintained throughout the project life cycle and any Performance Measurement Baseline schedule changes are incorporated using a formal change control process (see *Change Control*, EVMS Procedure 12.PM-007). The baseline schedule includes an appropriately detailed, hierarchical, integrated, and resource-loaded set of activities with defined milestones at appropriate points in time. High-level milestones indicate the start or completion of major phases of the project. Lower-level milestones that will facilitate more frequent tracking of

the project's progress must also be identified and included. The schedule will allow the determination of the critical path and the anticipation of time-phased resource requirements.

The baseline schedule must also identify and incorporate all the activities necessary to accomplish the project scope. Project activities should be organized based on the project's WBS. Nominal durations for each lowest-level activity are included, with consideration for the work required, the availability of required resources, and the risk(s) associated with each activity.

A high-level project summary schedule, sometimes called a master schedule, is created, based on the detailed schedule. This schedule details the overall project time frame and depicts major activities by summary WBS elements. See Appendix B for an example of a master schedule.

4.2 Detailed Schedule Preparation –

This section provides step-by-step instructions on schedule preparation. Project controls personnel, working with the Project Manager and the CAMs, carry out these steps using the indicated instructions.

Step 1. Develop Work Breakdown Structure

A WBS provides structure to the schedule and should extend to at least the control account level where work can be assigned to one responsible organizational element. The WBS used in the schedule is same as the WBS used in the cost estimate.

Step 2. Identify high-level milestones and work scope

The Project Manager negotiates with the customer and Laboratory management to create programmatic milestones and assign target dates for those milestones. In addition, the Project Manager will work with the Control Account Manager to establish intermediate milestones and assign target dates for those milestones.

Step 3. Develop detailed activities

Project Controls meets with CAMs to understand the WBS and OBS, and to identify all necessary work scope to an appropriate level of detail. This step normally involves a series of meetings to ensure that all work scope has been identified at the necessary level of detail. Detailed activities are developed as work packages, while less detailed activities may be developed as planning packages. Planning packages should be detailed into work packages no later than 6 months into the future.

Step 4. Organize work scope and technical milestones based on WBS

Work packages and planning packages are organized within a WBS. Each activity and milestone is assigned to a WBS element, which is used to map activities to Control Accounts. For in-kind work scope having no BCWS, associated schedule milestones are used to determine progress.

Step 5. Determine nominal durations for each activity

Determine the most probable duration for each activity, factoring in the planned level of resources and level of risk. Activity duration should be of relatively short duration and consistent with information provided in the activity's Basis of Estimate (see *Cost Estimating*, EVMS Procedure 12.PM-005). For activities that do not lend themselves to a short duration, an explanation in the WBS definition explaining the activity's scope and specifying "pegpoints" for earned value analysis may be necessary.

Step 6. Establish logical predecessor-successor relationships
Identify predecessor-successor relationships between pairs of activities and any associated programmatic and technical milestones utilizing four types of schedule relationships (Finish-to-Start, Start-to-Start, Finish-to-Finish, Start-to-Finish), along with required lead or lag times. Identify chains of activities affected by changes to programmatic milestone dates and establish links to those milestones.

Step 7. Define resources
A list of the resources required to complete the scope of work is organized into a resource breakdown structure (RBS). Resources are broadly categorized as labor, material (M&S), and subcontract, and each lowest-level resource in the RBS will have an associated unit cost or cost-per-use.

Step 8. Assign labor, material, and subcontract resources to each activity
Using the RBS, types and quantities of resources are assigned to each activity. The desired spread of each resource's assigned quantity over each activity's duration is specified. To create the performance measurement baseline, this spread should match the expected accrual of costs for the activity. An obligation baseline can also be created based on resource spreads shifted to earlier dates. This baseline is used only to match time-phased funding, not for earned-value analysis. At this step, work packages are assigned to control accounts.

Step 9. Perform schedule calculations
Schedule calculations are performed using the scheduling software. Early and late dates, critical path, and activity float are determined. Calculations can be performed at various times during the preparation of the schedule to allow for preliminary reviews and resource leveling.

Step 10. Assign risk-based schedule contingency
Part of the scheduling process includes project management determining the risk-based schedule contingency or allowance that is derived from the uncertainty and unknowns associated with a set of tasks and/or the overall project. Schedule contingency is used (like budget contingency) to accommodate approved scope changes and resultant schedule impacts without impacting overall project schedule objectives. Schedule contingency will be applied only to programmatic milestones and not to schedule detail.

Step 11. Prepare schedule reports
Project Controls will prepare reports and graphics that provide a summary schedule and detailed schedule for the entire scope of work. In addition, the resource usage over time sorted by resource category, and a critical path and near critical paths will be provided to the Project Manager and CAMs.

Step 12. Assemble and review schedule package
A complete schedule package will be made available to the project team and stakeholders for review. This package will contain the WBS, schedule graphics, resource reports, cost estimates, pertinent documentation, assumptions used in preparing the schedule, and the location of supporting files and reference information.

Step 13. Obtain schedule approval
Once the schedule package is reviewed by the CAMs and project controls staff, and approved by the Project Manager, the baseline summary schedule is included in the PEP. After customer review and approval, the fully detailed Performance Measurement Baseline schedule is considered a controlled document. No changes are allowed to the PMB unless approved through the project change control process described in *Change Control*, EVMS Procedure 12.PM-007

4.3 Schedule Maintenance

At regular intervals, but not less than monthly, the CAMs review planned and completed activities to determine progress, described in *Monthly Status Reporting*, EVMS Procedure 12.PM-006. As required by project management, Project Controls may provide on a regular basis critical path analyses, resource usage reports, forecast schedules, and other analysis reports.

5.0 REFERENCES

DOE Order 413.3B~~A~~ *Program and Project Management for the Acquisition of Capital Assets*
Fermi Research Alliance, LLC (FRA) Earned Value Management System Description
EVMS Procedure 12.PM-005 *Cost Estimating*
EVMS Procedure 12.PM-006 *Monthly Status Reporting*
EVMS Procedure 12.PM-007 *Change Control*

6.0 APPENDICES

12.PM-004A: Appendix A: Signature Page and Revision History
12.PM-004B: Appendix B: Acronyms and Glossary
12.PM-004C: Appendix C: Master Schedule Example
12.PM-005D: Appendix D: Project Scheduling Flowchart

Appendix A
SIGNATURE PAGE AND REVISION HISTORY

This procedure approved by: _____ _____
Director, Office of Project Management and Oversight **DATE**
Fermi National Accelerator Laboratory
Dr. L. E. Temple

TABLE OF REVISIONS

Author(s)	Description	Revision	Date
	Initial Version	0	10/17/08
E. McCluskey	In Appendix B changed definition of Control Account and added definition for Control Account Manager.	1	12/02/08
E. McCluskey	Minor wording clarifications	2	03/27/09
E. McCluskey	In Step 8, included work package assignment to CAs.	3	09/17/09
M. Kaducak	Updated reference to DOE O 413.3A to DOE O 413.3B in section 2.0 and 5.0	4	03/08/12

Appendix B
ACRONYMS AND GLOSSARY

CA – Control Account
CAM – Control Account Manager
CD-0 – DOE critical decision milestone – Mission Need Determined
CD-1 – DOE critical decision milestone – Baseline Range Established
CD-2 – DOE critical decision milestone – Baseline Approved
CD-3A – DOE critical decision milestone – Long-Lead Procurements Can Begin
CD-3B – DOE critical decision milestone – Start of Construction Approved
CD-4 – DOE critical decision milestone – Project Complete
DOE – U.S. Department of Energy
EVMS – Earned Value Management System
M&S – Materials and Services
OBS – Organizational Breakdown Structure
PEP – Project Execution Plan
PM – Project Manager
PMB – Performance Measurement Baseline
RAM – Responsibility Assignment Matrix
RBS – Resource Breakdown Structure
WBS – Work Breakdown Structure

Control Account (CA) - A key management control point located at the natural intersection point of the WBS and the OBS, where functional responsibility for work is assigned. It represents the point at which budgets (resource plans) and actual costs are accumulated and compared to earned value for management control purposes.

Control Account Manager (CAM) – The member of the project team responsible for the performance defined in a Control Account and for managing the resources authorized to accomplish the tasks.

Critical Decision (CD) – On DOE projects, a formal determination made by the Acquisition Executive and/or designated official at a specific point in a project life cycle that allows the project to proceed. Critical Decisions occur in the course of a project: at determination of Mission Need (CD-0), at the completion of conceptual design (CD-1), at project baselining (CD-2), at the commencement of execution (CD-3), and at turnover (CD-4).

Project Controls – Project support staff for planning, baseline development, management system plan preparation, as well as for monitoring, assessing, controlling, and reporting progress against the project baseline.

Responsibility Assignment Matrix (RAM) - A structure that relates the project organization structure to the work breakdown structure to help ensure that each element of the project's scope of work is assigned to a responsible individual.

Resource Breakdown Structure (RBS) – A hierarchical grouping of resource elements that organizes and defines the resources available for use by a project. These include labor, material, and subcontracts.

Work Breakdown Structure (WBS) - A product-oriented grouping of project elements that organizes and defines the total scope of the project. The WBS is a multilevel framework that organizes and graphically displays elements representing work to be accomplished in logical relationships. Each descending level represents an increasingly detailed definition of a project component. Project components may be products or services. It is the structure and code that integrates and relates all project work (technical, schedule, and cost) and is used throughout the life cycle of a project to identify and track specific work scopes.

Work Package (WP) – A task or set of tasks performed within a control account. The work package is the lowest level activity to which resources are assigned.

No copy printed from this site is official. Before using a printed copy, verify that it is the most current version by checking the document revision on Office of Project Management Oversight's Web Page: http://www.fnal.gov/directorate/OPMO/ProcPol/home.htm Print Date: 3/9/2012

Appendix C
Master Schedule - Example

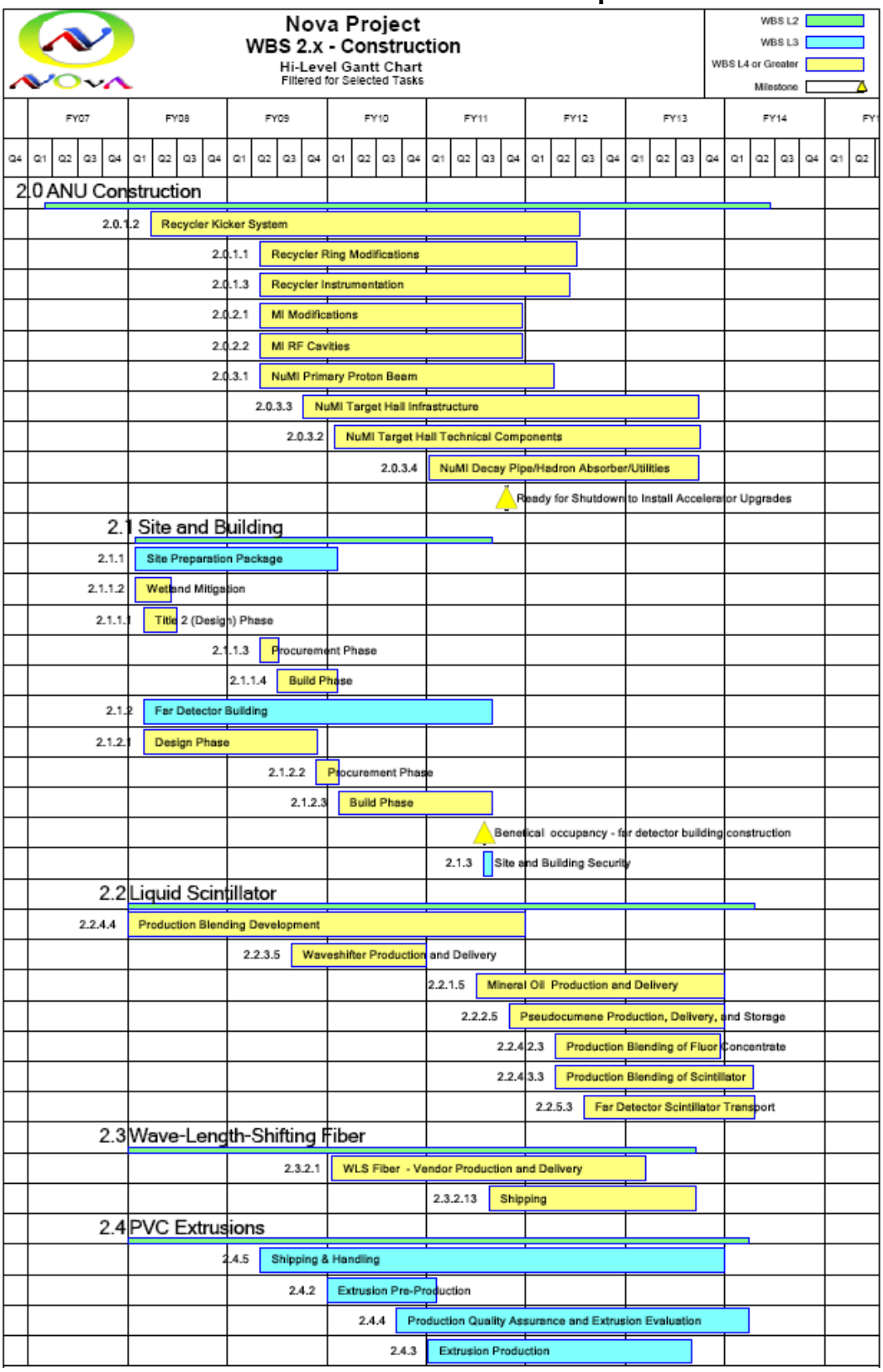

No copy printed from this site is official. Before using a printed copy, verify that it is the most current version by checking the document revision on Office of Project Management Oversight's Web Page: http://www.fnal.gov/directorate/OPMO/ProcPol/home.htm Print Date: 3/9/2012

Appendix C (continued)

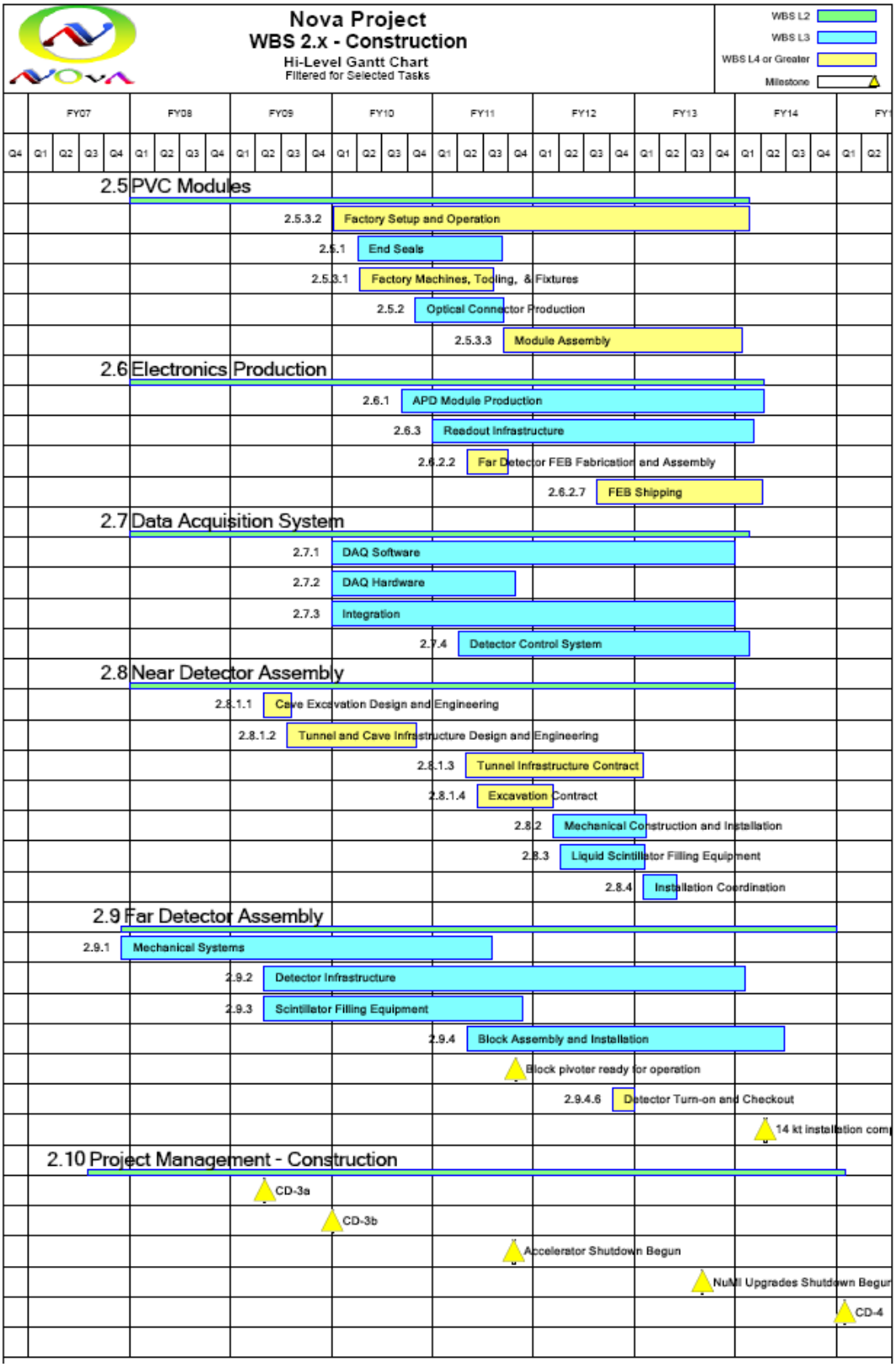

No copy printed from this site is official. Before using a printed copy, verify that it is the most current version by checking the document revision on Office of Project Management Oversight's Web Page: http://www.fnal.gov/directorate/OPMO/ProcPol/home.htm Print Date: 3/9/2012

APPENDIX E Project Scheduling Flowchart

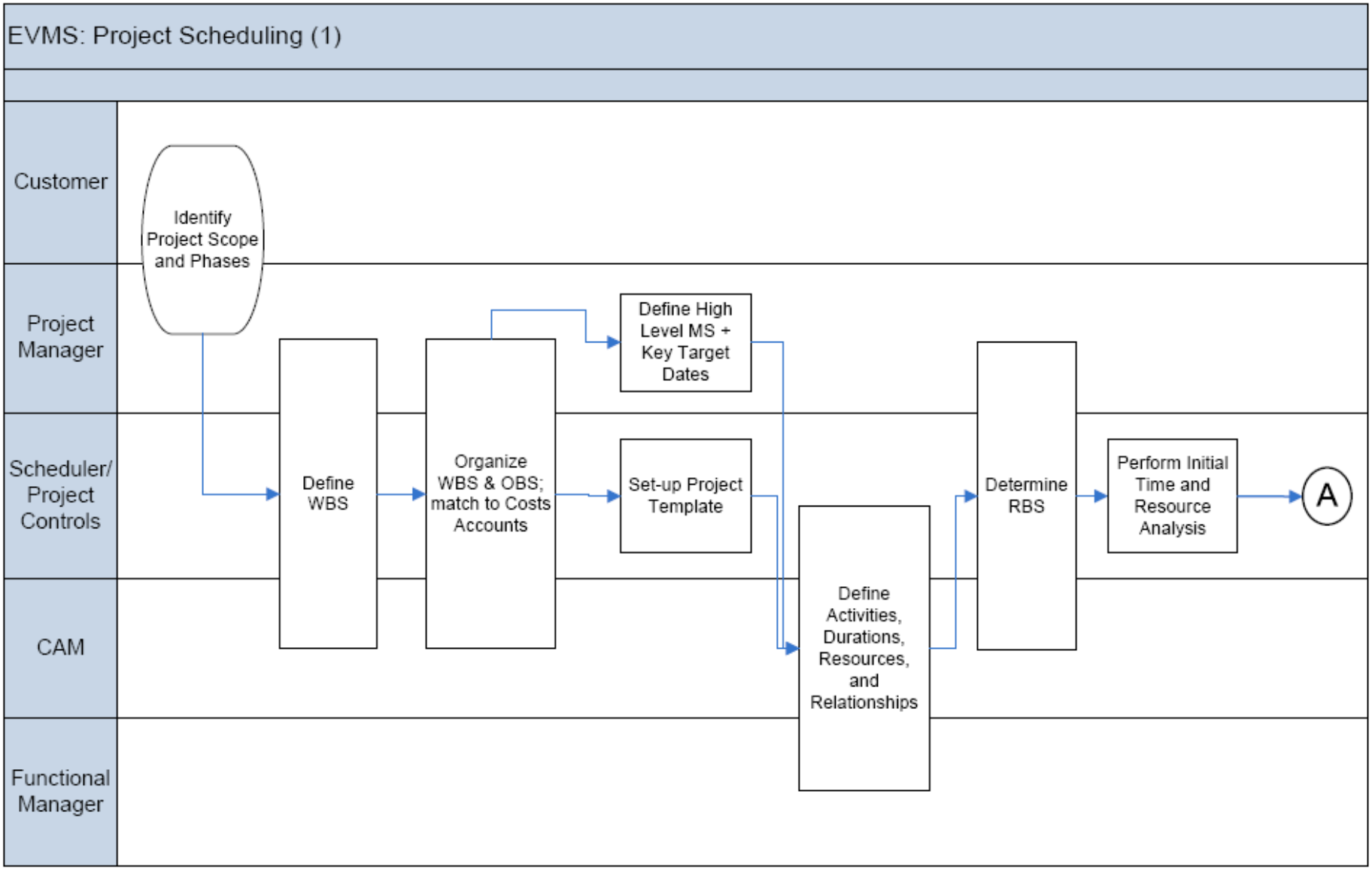

No copy printed from this site is official. Before using a printed copy, verify that it is the most current version by checking the document revision on Office of Project Management Oversight's Web Page: http://www.fnal.gov/directorate/OPMO/ProcPol/home.htm Print Date: 3/9/2012

APPENDIX E Project Scheduling Flowchart (continued)

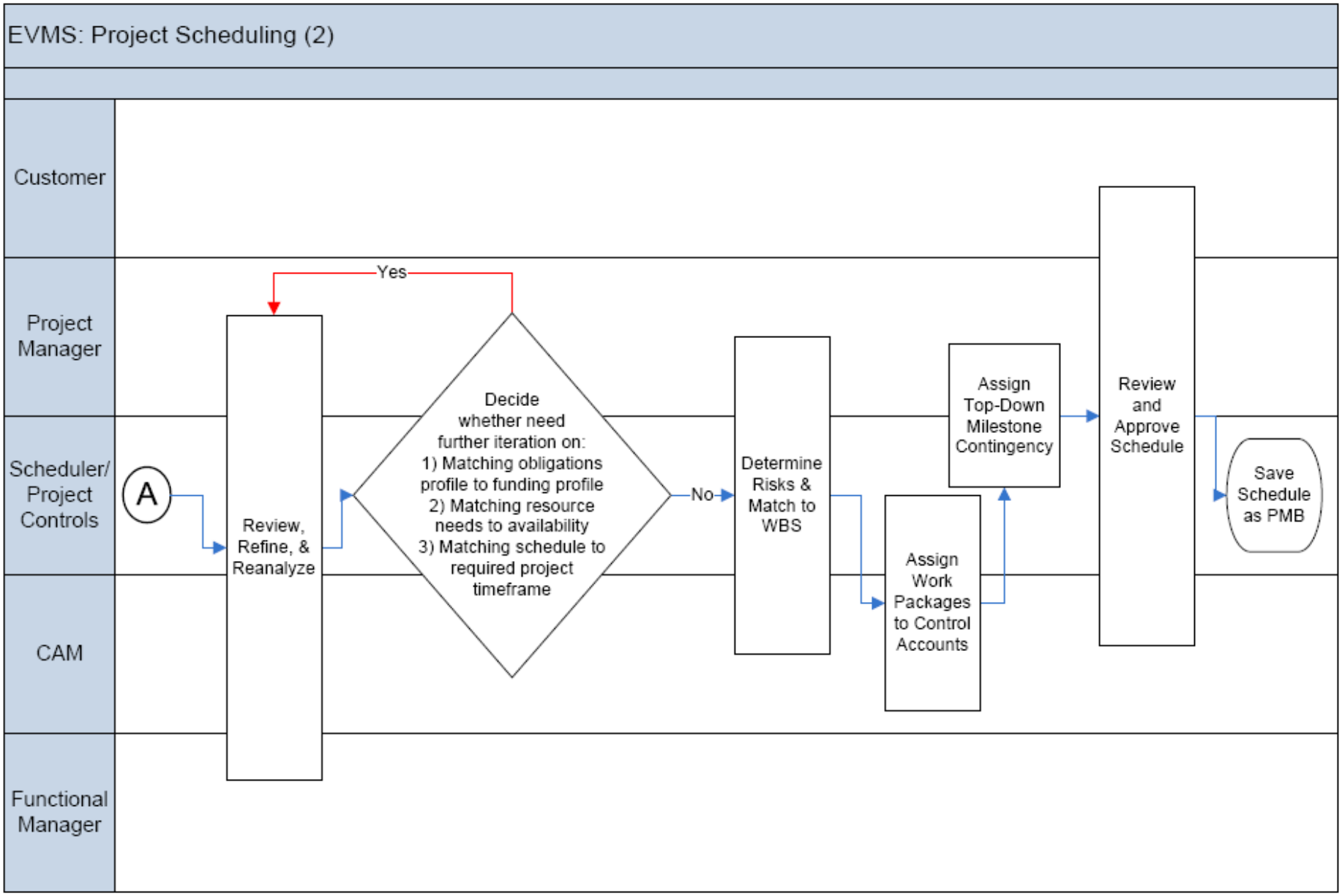

No copy printed from this site is official. Before using a printed copy, verify that it is the most current version by checking the document revision on Office of Project Management Oversight's Web Page: http://www.fnal.gov/directorate/OPMO/ProcPol/home.htm Print Date: 3/9/2012