DESCRIPTION: PBAR TARGET MODULE MARK 2, BEARING BLOCK
CATEGORY: BLOCK PROJECT:

REV	REVISION CONTROL DOCUMENT	DATES	SIGNATURES	
-	F10094618---RCD	22-Aug-2018	DRAWN	P.JONES
			APPROVED	

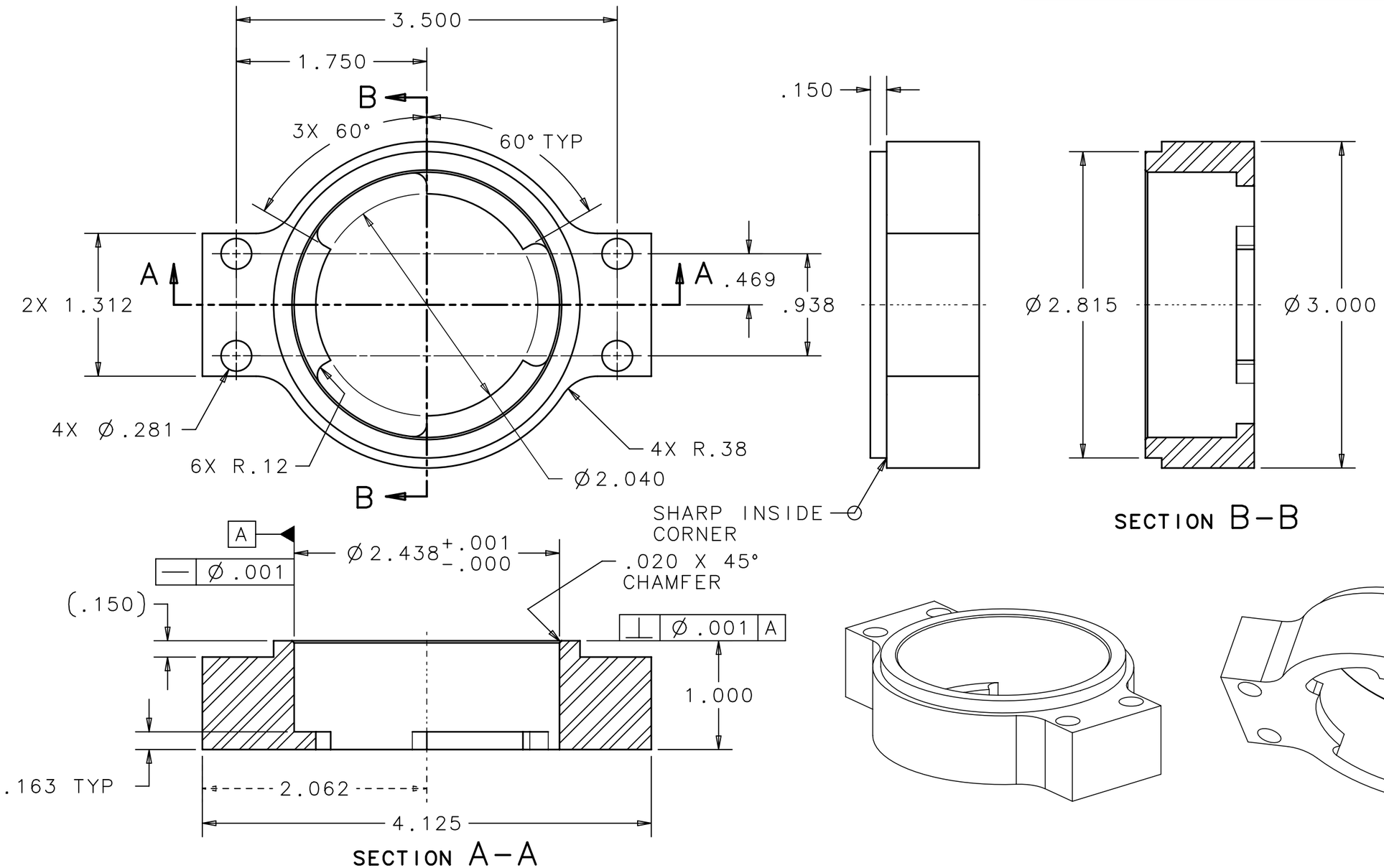

UNLESS OTHERWISE SPECIFIED				
±.X	±.XX	±.XXX	±X/X	±X°
.1	.02	.005	1/16	1°

BREAK ALL SHARP EDGES .015 MAX.
DO NOT SCALE DRAWING
DIMENSIONS BASED ON ASME Y14.5-2009
MAX. ALL MACH SURFACES 125
DRAWING UNITS: INCHES

DRAWN	P.JONES	DATE	22-Aug-2018
CHECKED	R.LEBEAU	DATE	28-Aug-2018
APPROVED	Y.HE	DATE	28-Aug-2018

USED ON
F10094620

MATERIAL
304 STAINLESS STEEL, UNS S30400

GROUP: Accelerator Mechanical Support | CAGE CODE: 0U5R6

FERMI NATIONAL ACCELERATOR LABORATORY
UNITED STATES DEPARTMENT OF ENERGY

NAME
PBAR TARGET MODULE BEARING BLOCK

SCALE	SIZE	DRAWING NUMBER	SHEET	REV
1:1	B	F10094618	1 OF 1	-