REV	DESCRIPTION	DRAWN	DATE
		APPROVED	DATE

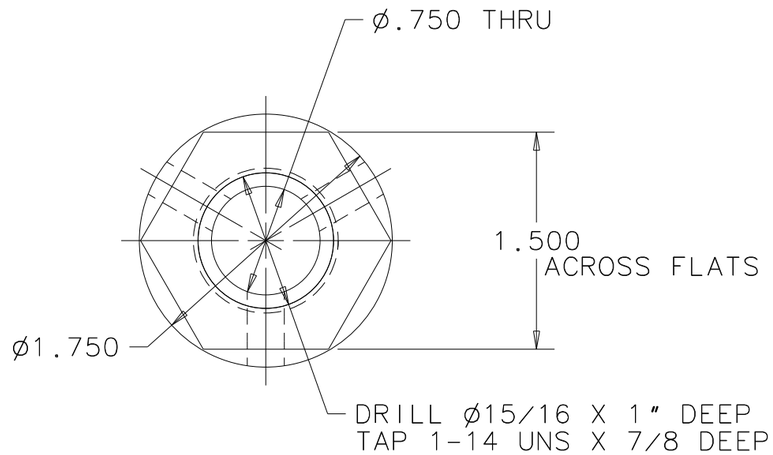

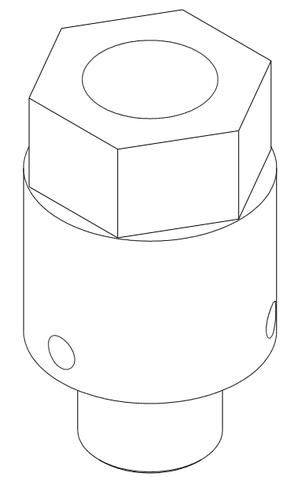

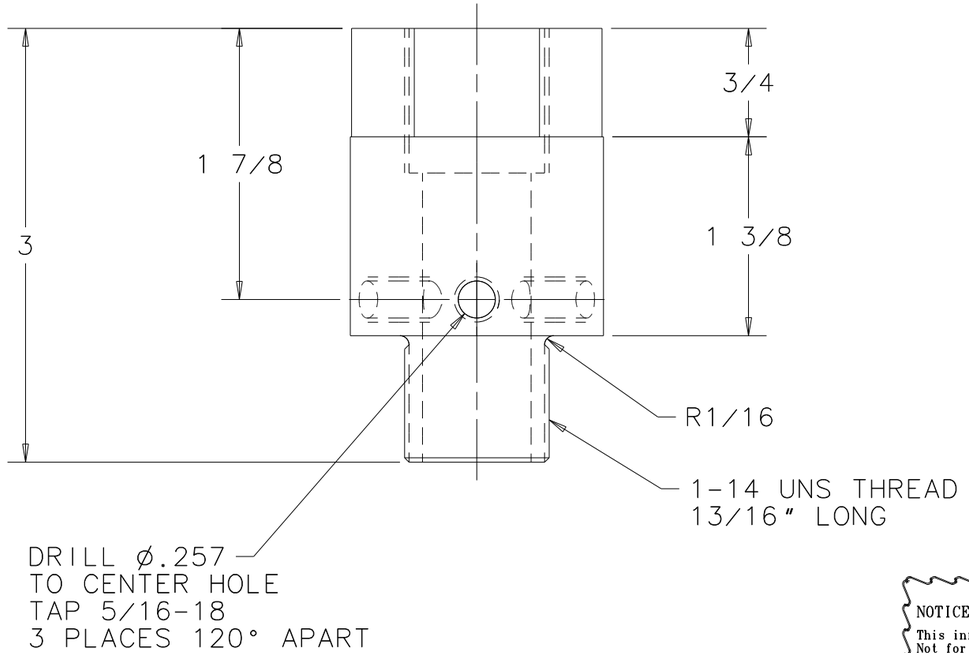

NOTICE: IMAGE OBTAINED FROM FERMILAB WEB SITE

This information is provided for REFERENCE use only.
Not for MANUFACTURE, or DESIGN INFORMATION.
All information contained in this document represents work sponsored by an agency of the U.S. Government.
Neither the U.S. Government nor any agency thereof, nor Universities Research Association, Inc., nor any of their employees or officers, makes any warranty, express or implied, or assumes any legal liability or responsibility for the accuracy, completeness, or usefulness of any information, apparatus, product or process disclosed, or represents that its use would not infringe privately owned rights.

UNLESS OTHERWISE SPECIFIED			ORIGINATOR	P.HURH	11-JAN-2006
FRACTIONS	DECIMALS	ANGLES	DRAWN	B.POPPER	11-JAN-2006
± 1/64	± .005	± 1°	CHECKED	R.LEBEAU	07-FEB-2006
			APPROVED	P.HURH	07-FEB-2006

1. BREAK ALL SHARP EDGES .015 MAX.
2. DO NOT SCALE DRAWING.
3. DIMENSIONS BASED UPON ASME Y14.5M-1994
4. MAX. ALL MACH. SURFACES 63
5. DRAWING UNITS: U.S. INCH

USED ON

MATERIAL
316L STAINLESS STEEL

FERMI NATIONAL ACCELERATOR LABORATORY
UNITED STATES DEPARTMENT OF ENERGY

PBAR SOURCE
TARGET MODULE MARK V
INNER SHAFT LOCK

SCALE	DRAWING NUMBER	SHEET	REV
FULL	8055.110-MB-413917	1 OF 1	

CREATED WITH : Ideas11NXSeries | GROUP: ACCELERATOR MECH. SUPPT.