DESCRIPTION: PBAR TARGET MODULE, ROTATING BEARING BLOCK ASSY
CATEGORY: ASSEMBLY PROJECT:

REV	REVISION CONTROL DOCUMENT	DATES	SIGNATURES	
-	F10094620---RCD	24-Aug-2018	DRAWN	P.JONES
			APPROVED	

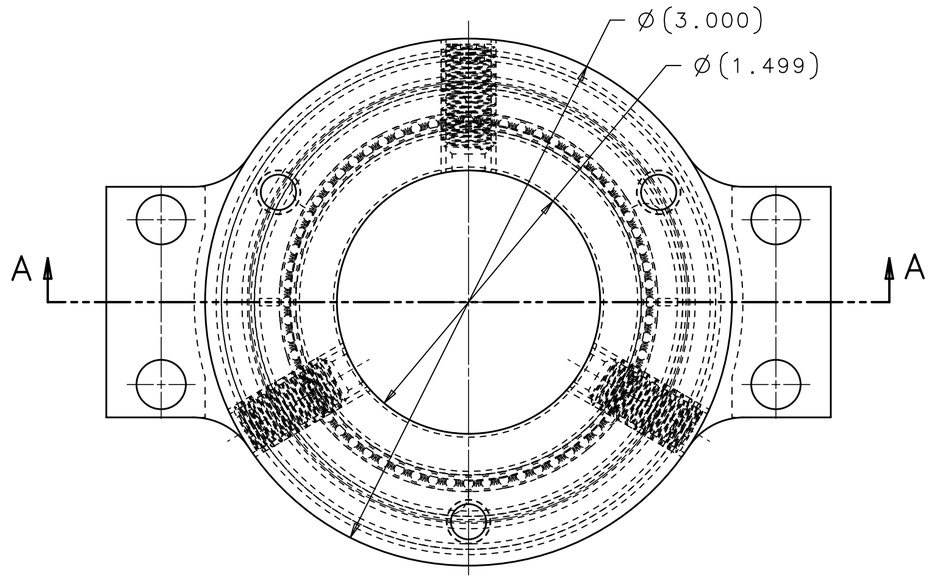

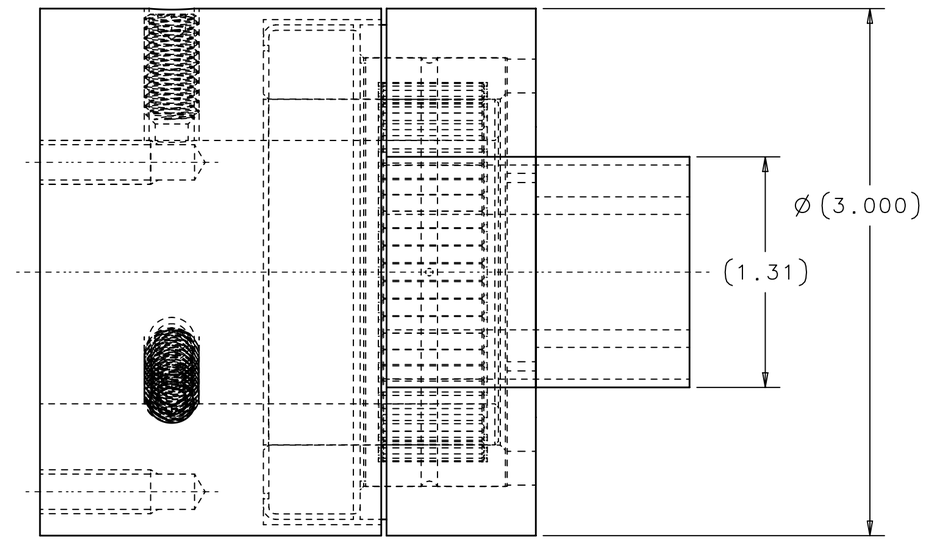

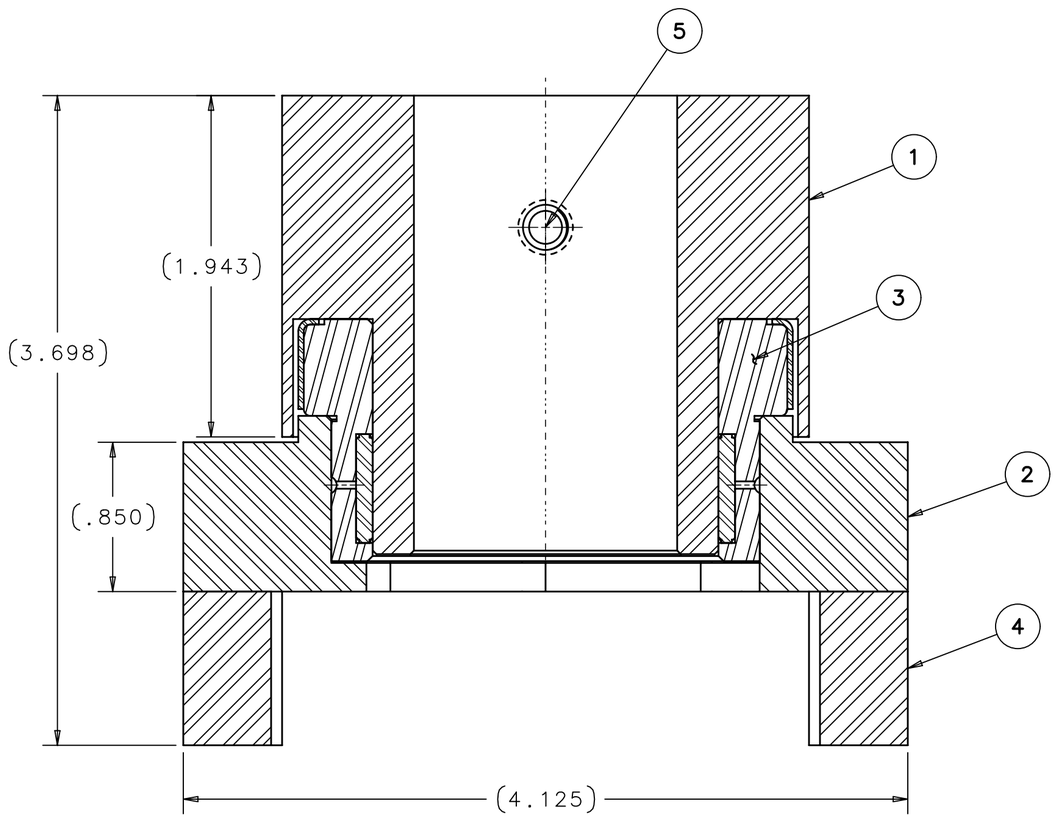

SECTION A–A

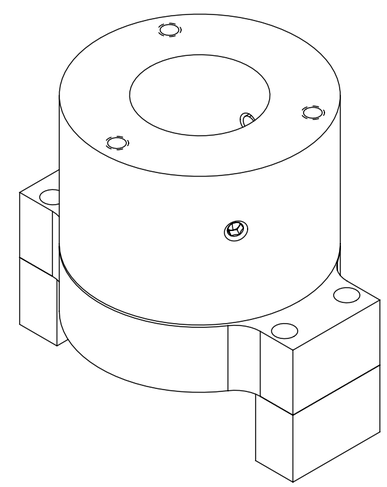

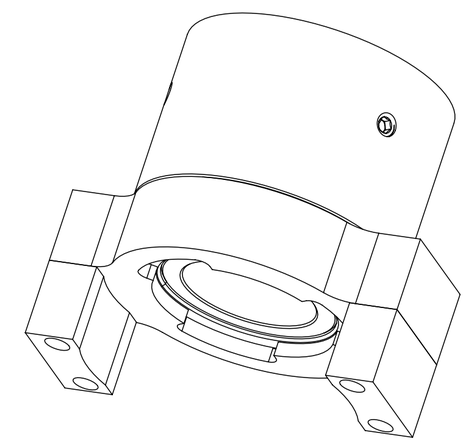

ITEM	VENDOR NO.	PART NO.	DESCRIPTION	QTY
5	MCMASTER-CARR #91381A580	FC0067470	SET SCREW, BLACK-OXIDE ALLOY STEEL, BRASS TIP	3
4		F10094619	PBAR TARGET MODULE BEARING BLOCK SUPPORT	2
3	MCMASTER-CARR #1418N111	FC0067427	COMBINATION BALL/ NEEDLE-ROLLAR BEARING, 1.969" ID, STEEL	1
2		F10094618	PBAR TARGET MODULE BEARING BLOCK	1
1		F10094601	PBAR TARGET MODULE ROTATING SHAFT COLLAR	1

UNLESS OTHERWISE SPECIFIED

±.X	±.XX	±.XXX	±X/X	±X°
.1	.02	.005	1/16	1°

BREAK ALL SHARP EDGES .015 MAX.
DO NOT SCALE DRAWING
DIMENSIONS BASED ON ASME Y14.5-2009
MAX. ALL MACH SURFACES 125
DRAWING UNITS: INCHES

DRAWN	P.JONES	DATE	24-Aug-2018
CHECKED	R.LEBEAU	DATE	28-Aug-2018
APPROVED	Y.HE	DATE	28-Aug-2018

USED ON: F00413291

MATERIAL: SEE PARTS LIST

GROUP: Accelerator Mechanical Support | CAGE CODE: 0U5R6

FERMI NATIONAL ACCELERATOR LABORATORY
UNITED STATES DEPARTMENT OF ENERGY

NAME: PBAR TARGET MODULE ROTATING BEARING BLOCK ASSY

SCALE	SIZE	DRAWING NUMBER	SHEET	REV
1.5:1	C	F10094620	1 OF 1	-

DESCRIPTION: PBAR TARGET MODULE MARK 2, BEARING BLOCK
CATEGORY: BLOCK PROJECT:

REV	REVISION CONTROL DOCUMENT	DATES	SIGNATURES	
-	F10094618---RCD	22-Aug-2018	DRAWN	P.JONES
			APPROVED	

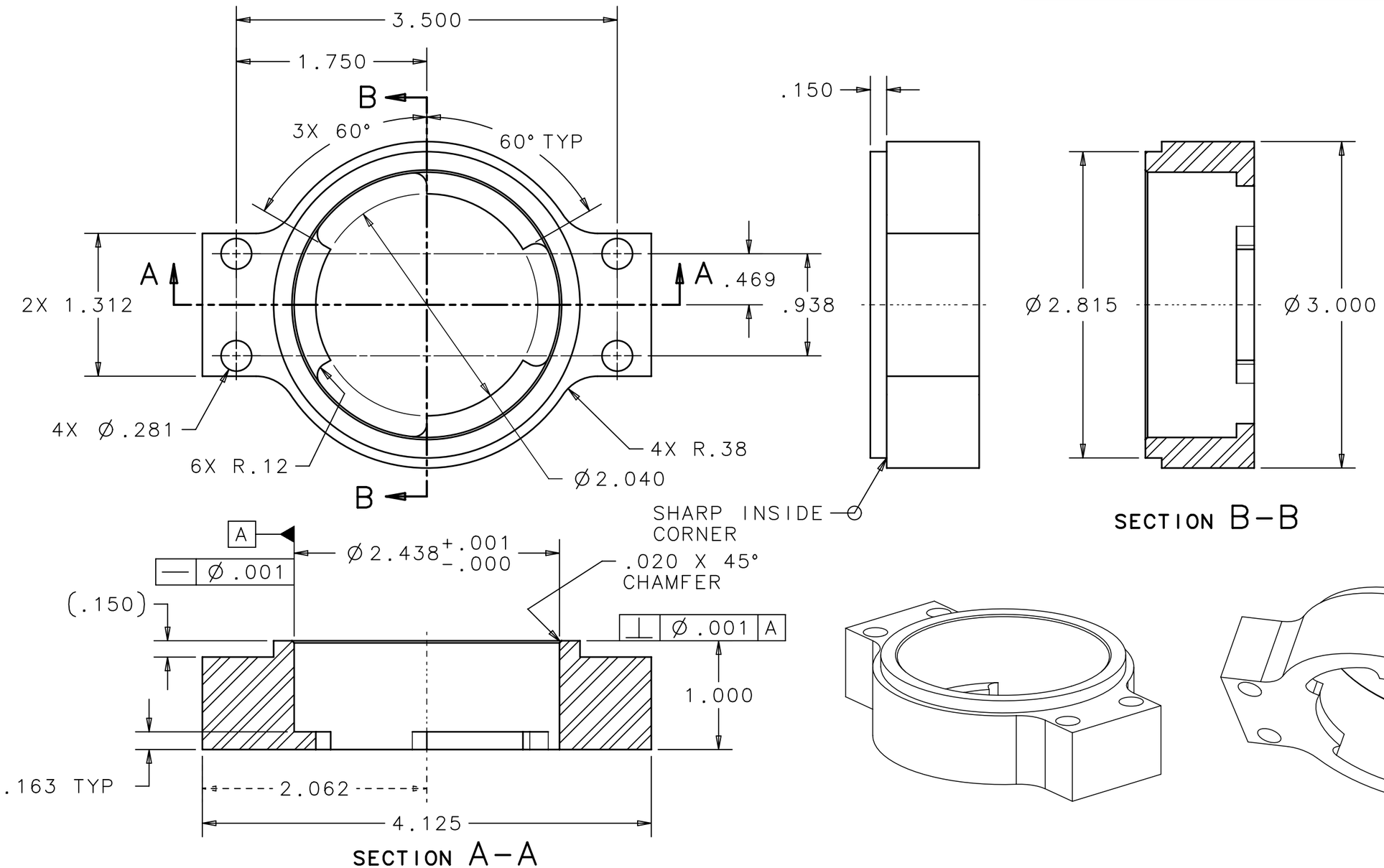

UNLESS OTHERWISE SPECIFIED				
±.X	±.XX	±.XXX	±X/X	±X°
.1	.02	.005	1/16	1°

BREAK ALL SHARP EDGES .015 MAX.
DO NOT SCALE DRAWING
DIMENSIONS BASED ON ASME Y14.5-2009
MAX. ALL MACH SURFACES 125
DRAWING UNITS: INCHES

DRAWN	P.JONES	DATE	22-Aug-2018
CHECKED	R.LEBEAU	DATE	28-Aug-2018
APPROVED	Y.HE	DATE	28-Aug-2018

USED ON
F10094620

MATERIAL
304 STAINLESS STEEL, UNS S30400

GROUP: Accelerator Mechanical Support | CAGE CODE: 0U5R6

FERMI NATIONAL ACCELERATOR LABORATORY
UNITED STATES DEPARTMENT OF ENERGY

NAME
PBAR TARGET MODULE BEARING BLOCK

SCALE	SIZE	DRAWING NUMBER	SHEET	REV
1:1	B	F10094618	1 OF 1	-

DESCRIPTION: PBAR TARGET ROTATING SHAFT COLLAR
CATEGORY: COLLAR PROJECT:

REV	REVISION CONTROL DOCUMENT	DATES	SIGNATURES	
-	F10094601---RCD	17-Aug-2018	DRAWN	P.JONES
			APPROVED	

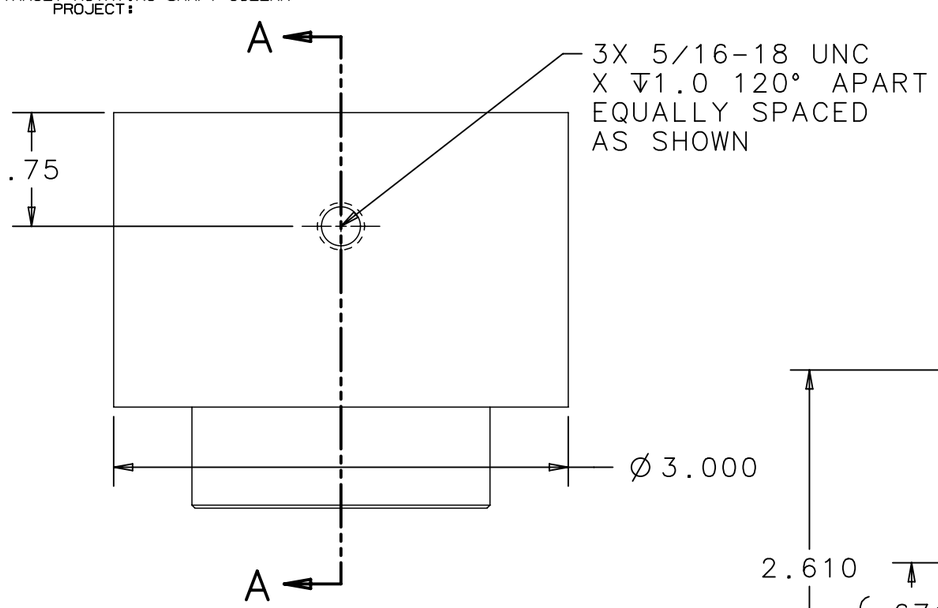

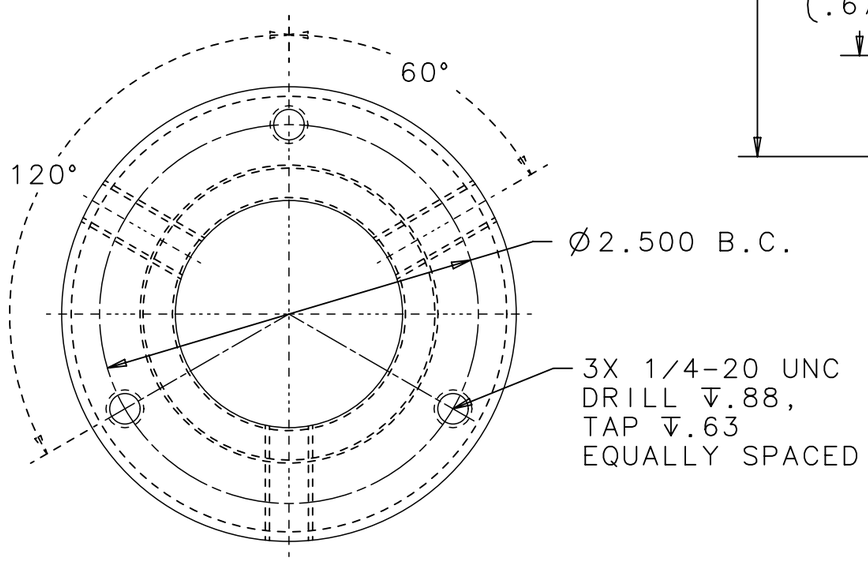

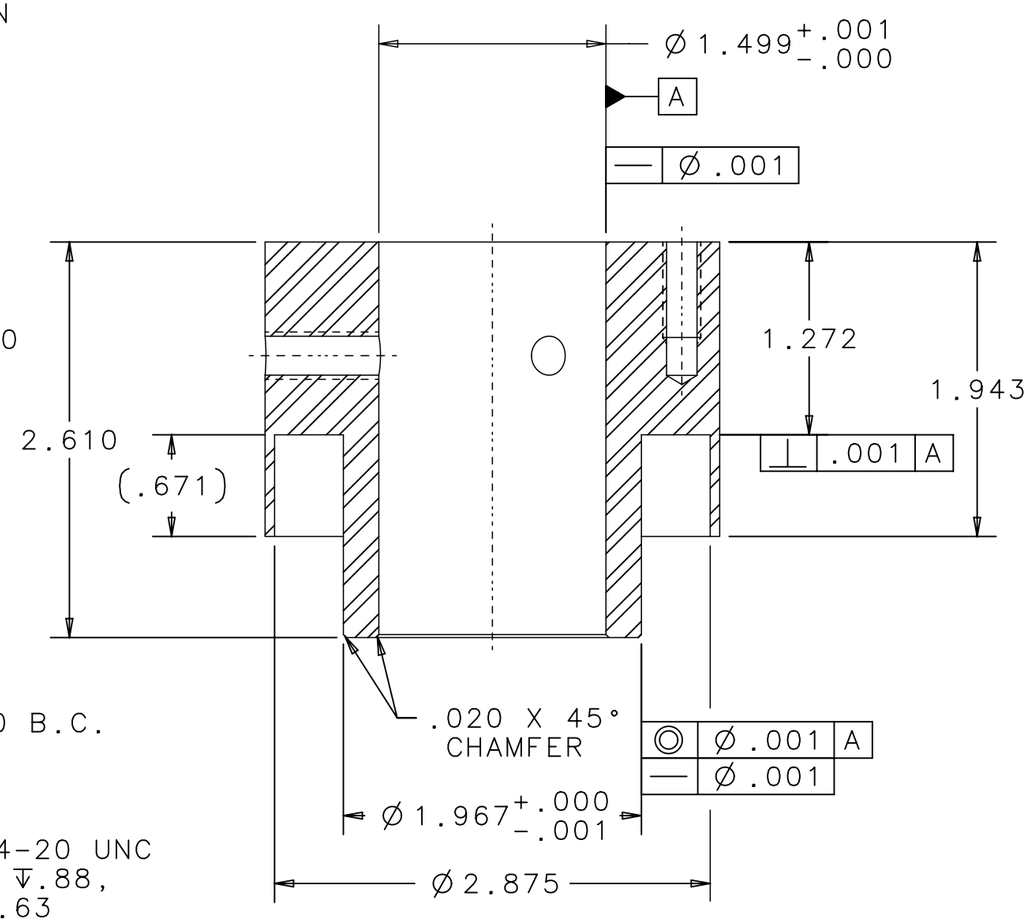

SECTION A–A

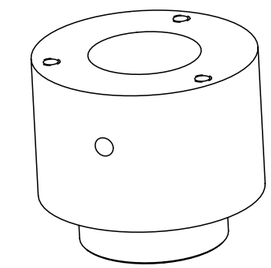

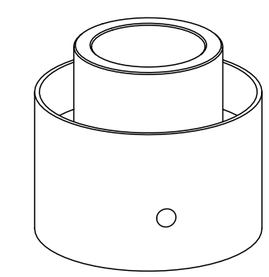

NOTE:

1. PART TO BE ARMOLOY COATED TO A THICKNESS OF .0002 - .0003".

UNLESS OTHERWISE SPECIFIED				
±.X	±.XX	±.XXX	±X/X	±X°
.1	.02	.005	1/16	1°

BREAK ALL SHARP EDGES .015 MAX.
DO NOT SCALE DRAWING
DIMENSIONS BASED ON ASME Y14.5-2009
MAX. ALL MACH SURFACES 125
DRAWING UNITS: INCHES

DRAWN	P.JONES	DATE	17-Aug-2018
CHECKED	R.LEBEAU	DATE	28-Aug-2018
APPROVED	Y.HE	DATE	28-Aug-2018

USED ON
F10094620

MATERIAL
4340 STEEL, HEAT TREATED, UNS G43400

GROUP: Accelerator Mechanical Support | CAGE CODE: 0U5R6

FERMI NATIONAL ACCELERATOR LABORATORY
UNITED STATES DEPARTMENT OF ENERGY

NAME
PBAR TARGET ROTATING SHAFT COLLAR

SCALE	SIZE	DRAWING NUMBER	SHEET	REV
1:1	B	F10094601	1 OF 1	-

DESCRIPTION: PBAR TARGET MODULE BEARING BLOCK SUPPORT
CATEGORY: SUPPORT PROJECT:

REV	REVISION CONTROL DOCUMENT	DATES	SIGNATURES	
-	F10094619---RCD	24-Aug-2018	DRAWN	P.JONES
			APPROVED	

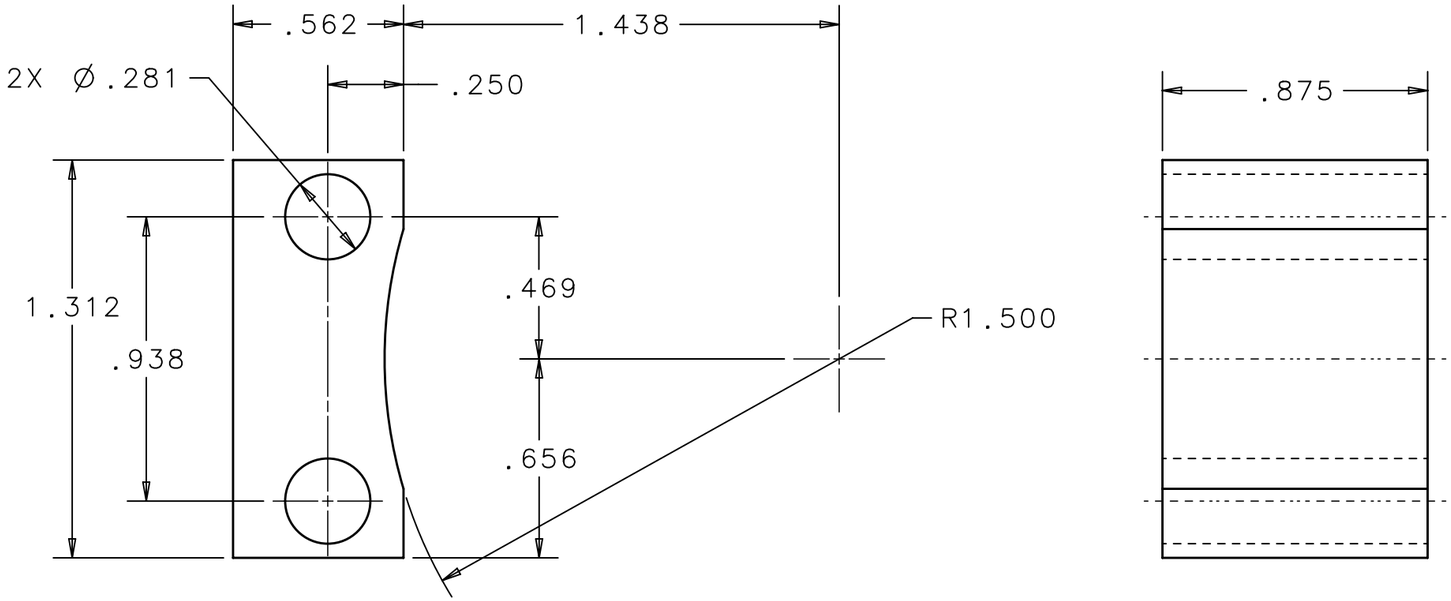

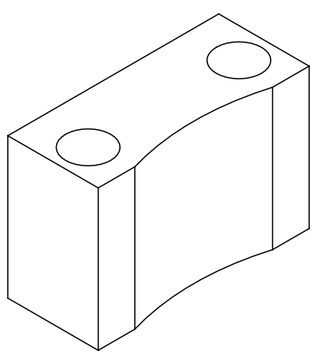

NOTE:

1. 2 REQUIRED. BOTH PARTS .875 DIMENSION TO BE MACHINED TOGETHER.

UNLESS OTHERWISE SPECIFIED				
±.X	±.XX	±.XXX	±X/X	±X°
.1	.02	.005	1/16	1°

BREAK ALL SHARP EDGES .015 MAX.
DO NOT SCALE DRAWING
DIMENSIONS BASED ON ASME Y14.5-2009
MAX. ALL MACH SURFACES 125
DRAWING UNITS: INCHES

DRAWN	P.JONES	DATE	24-Aug-2018
CHECKED	R.LEBEAU	DATE	28-Aug-2018
APPROVED	Y.HE	DATE	28-Aug-2018

USED ON
F10094620

MATERIAL
304 STAINLESS STEEL, UNS S30400

GROUP: Accelerator Mechanical Support | CAGE CODE: 0U5R6

FERMI NATIONAL ACCELERATOR LABORATORY
UNITED STATES DEPARTMENT OF ENERGY

NAME
PBAR TARGET MODULE BEARING BLOCK SUPPORT

SCALE	SIZE	DRAWING NUMBER	SHEET	REV
1:1	B	F10094619	1 OF 1	-