REV	DESCRIPTION	DRAWN	DATE
		APPROVED	DATE
A	THRU HOLE CHANGED TO C'BORED, AND NOTCHES ADDED	R.STEWART	24-AUG-2005
		R.SCHULTZ	24-AUG-2005

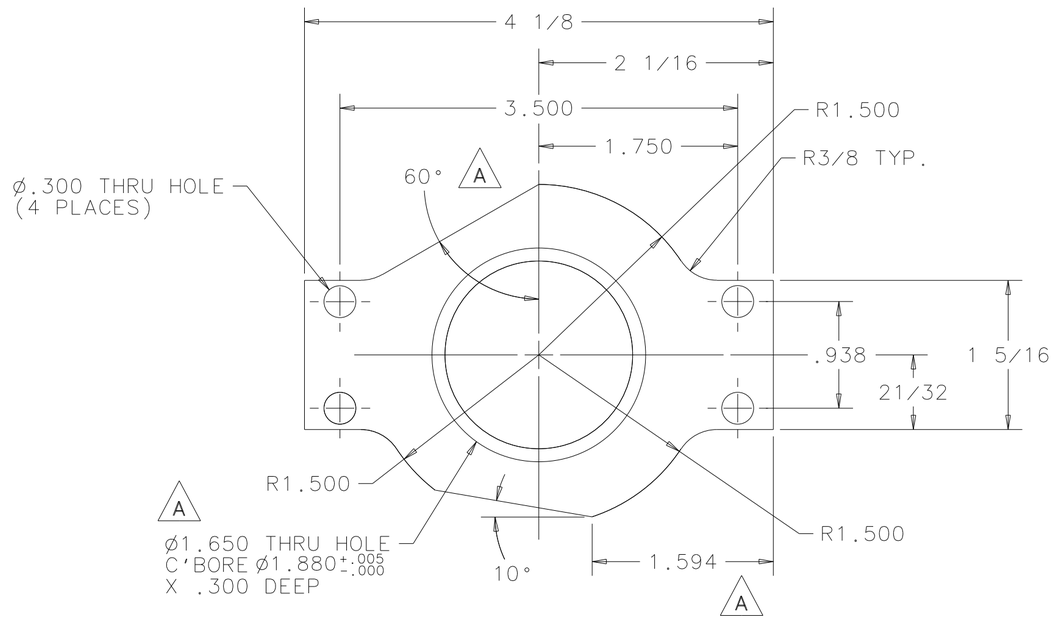

TOP VIEW

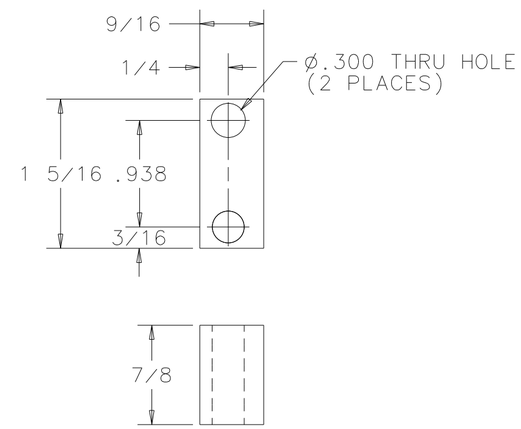

ITEM 2

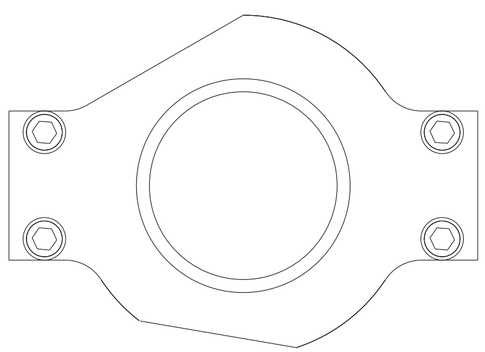

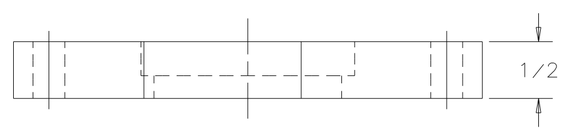

ITEM 1

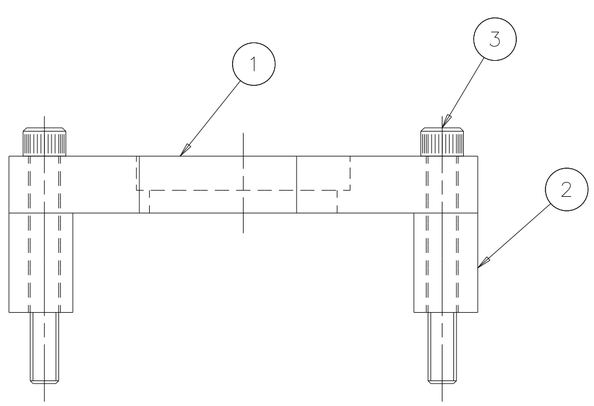

ITEM	PART NO.	DESCRIPTION OR SIZE	QTY.
3	PURCHASE	1/4-20 UNC STNL STL SHCS 2 LG.	4
2		6061-T6 ALUMINUM PLATE	1
1		6061-T6 ALUMINUM PLATE	1

PARTS LIST

UNLESS OTHERWISE SPECIFIED			ORIGINATOR	P.HURH	05-AUG-2002
FRACTIONS	DECIMALS	ANGLES	DRAWN	R.STEWART	05-AUG-2002
± 1/64	± .005	± .5°	CHECKED	R.SCHULTZ	31-AUG-2004
1. BREAK ALL SHARP EDGES .015 MAX. 2. DO NOT SCALE DRAWING. 3. DIMENSIONS BASED UPON ANSI Y14.5M-1982 4. MAX. ALL MACH. SURFACES 63			APPROVED	R.SCHULTZ	31-AUG-2004
			USED ON	MD-413319	
			MATERIAL	SEE PARTS LIST	

FERMI NATIONAL ACCELERATOR LABORATORY
UNITED STATES DEPARTMENT OF ENERGY

PBAR SOURCE
TARGET MODULE MARK 2
BEARING BLOCK

SCALE	DRAWING NUMBER	SHEET	REV
1:2	8055.110-MC-413311	1 OF 1	A

CREATED WITH : Ideas11NXSeries GROUP: ACCELERATOR MECH. SUPPT.

NOTICE: IMAGE OBTAINED FROM FERMILAB WEB SITE

This information is provided for REFERENCE use only. Not for MANUFACTURE, or DESIGN INFORMATION. All information contained in this document represents work sponsored by an agency of the U.S. Government. Neither the U.S. Government nor any agency thereof, nor Universities Research Association, Inc., nor any of their employees or officers, makes any warranty, express or implied, or assumes any legal liability or responsibility for the accuracy, completeness, or usefulness of any information, apparatus, product or process disclosed, or represents that its use would not infringe privately owned rights.