REV	DESCRIPTION	DRAWN	DATE
		APPROVED	DATE

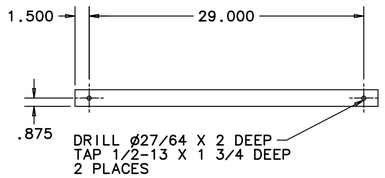

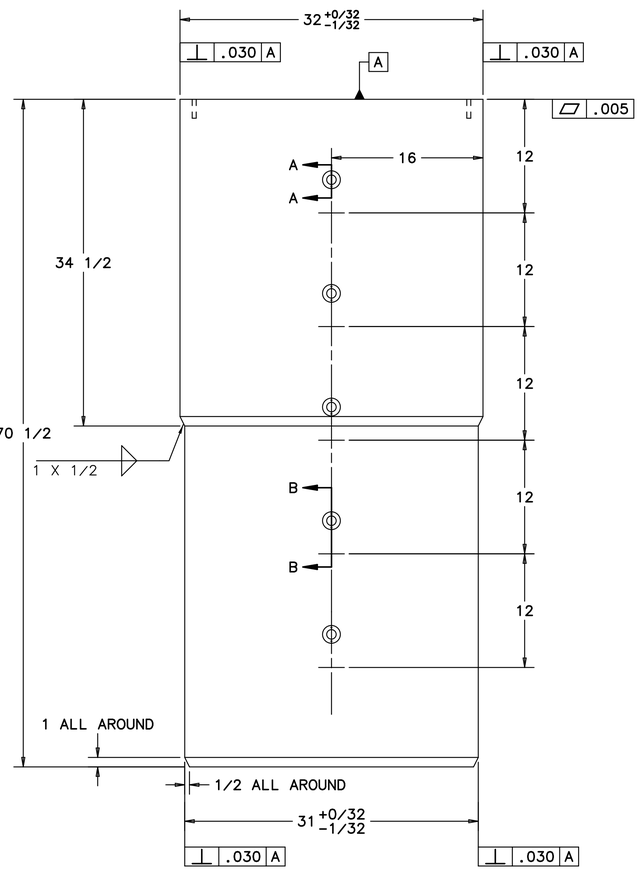

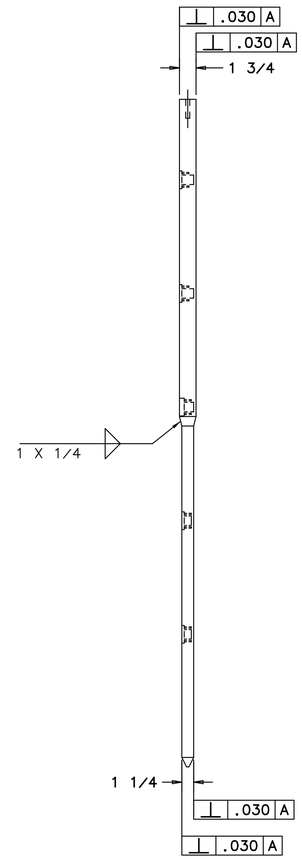

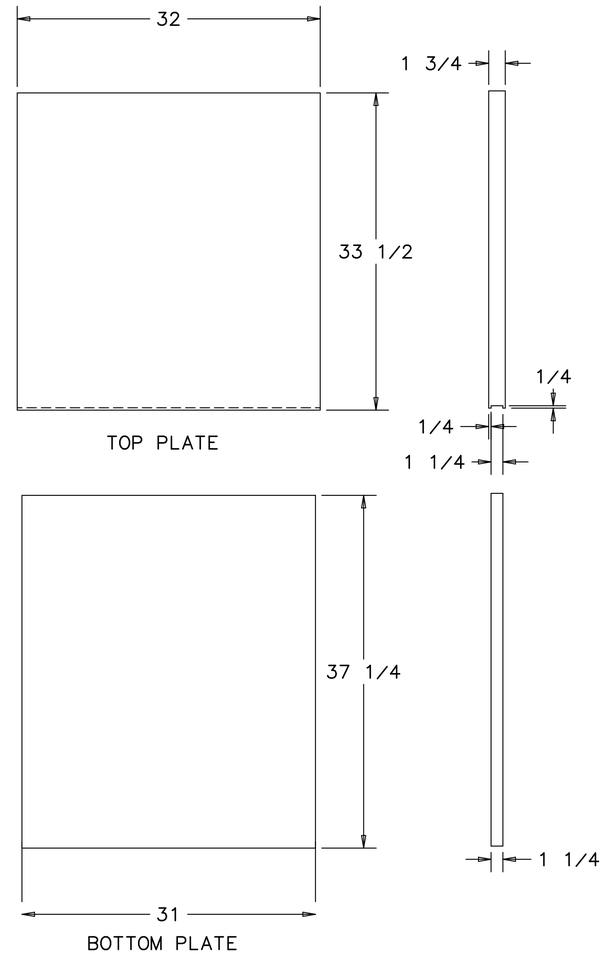

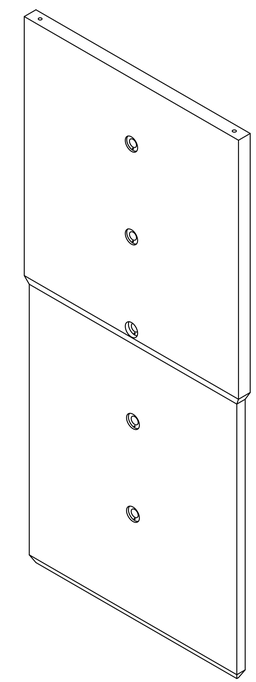

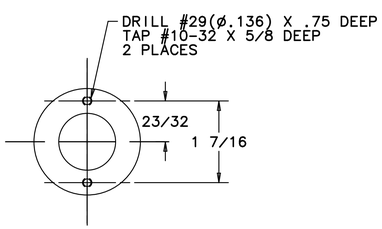

TYPICAL DETAIL ALL CUTOUTS

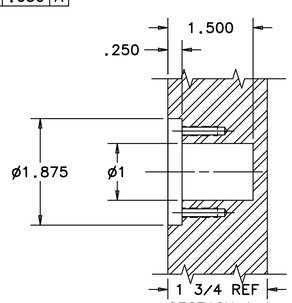

SECTION A-A
3 PLACES

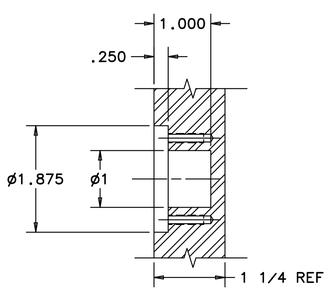

SECTION B-B
2 PLACES

NOTICE: IMAGE OBTAINED FROM FERMILAB WEB SITE

This information is provided for REFERENCE use only. Not for MANUFACTURE, or DESIGN INFORMATION. All information contained in this document represents work sponsored by an agency of the U.S. Government. Neither the U.S. Government nor any agency thereof, nor Universities Research Association, Inc., nor any of their employees or officers, makes any warranty, express or implied, or assumes any legal liability or responsibility for the accuracy, completeness, or usefulness of any information, apparatus, product or process disclosed, or represents that its use would not infringe privately owned rights.

UNLESS OTHERWISE SPECIFIED			ORIGINATOR	A.LEVELING	18-JUN-2008
FRACTIONS	DECIMALS	ANGLES	DRAWN	B.POPPER	18-JUN-2008
± 1/64	± .005	± 1°	CHECKED	A.LEVELING	12-AUG-2009
1. BREAK ALL SHARP EDGES .015 MAX. 2. DO NOT SCALE DRAWING. 3. DIMENSIONS BASED UPON ASME Y14.5M-1994 4. MAX. ALL MACH. SURFACES 63 5. DRAWING UNITS: U.S. INCH			APPROVED	A.LEVELING	12-AUG-2009
			USED ON	8055.110-MC-449300	
			MATERIAL	AISI M1020 OR EQUAL	

FERMI NATIONAL ACCELERATOR LABORATORY
UNITED STATES DEPARTMENT OF ENERGY

PBAR SOURCE TARGET HALL RADIATION TEST BASIC BLOCK

SCALE	DRAWING NUMBER	SHEET	REV
1/8	8055.110-MD-449298	1 OF 1	

CREATED WITH : Ideas12NXSeries | GROUP: ACCELERATOR MECH. SUPPT.