REV	DESCRIPTION	DRAWN / APPROVED	DATE / DATE
	Added circuitry to monitor the external 24V PS.		11-19-2009
B	Removed circuitry to monitor the external 24V PS.		07-21-2010

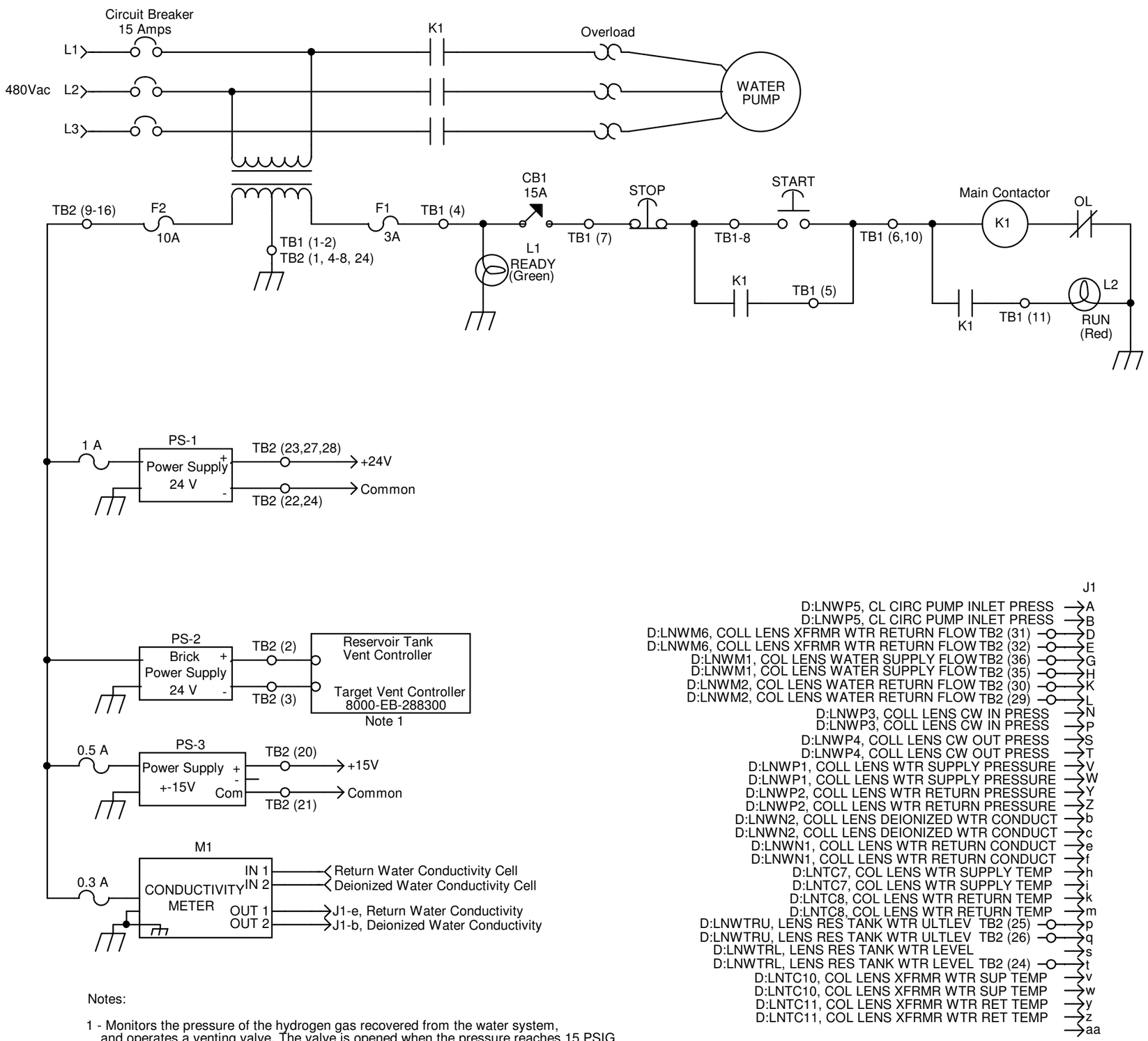

Notes:

1 - Monitors the pressure of the hydrogen gas recovered from the water system, and operates a venting valve. The valve is opened when the pressure reaches 15 PSIG and is closed at 9 PSIG. The Green LED is illuminated up to 13 PSIG and the yellow LED is illuminated above 11 PSIG.

ITEM NO.	PART NO.	DESCRIPTION OR SIZE	QTY. REQ.
	F 1	FUSE, TYPE FRN3, 250V, 3AMP	1
	F 2	FUSE, TYPE FRN10, 250V, 10AMP	1
	PS1	24V / 2.4A. Power-One, HC24-2.4-A	1
	PS2	24V / 2.5A, LAMBDA # DT60PW240P	1
	PS3	15V / 0.4A. Power-One, HAD15-0.4-A	1
	M1	Conductivity Cell, Honeywell UDA2182-CC1-CC2-NN-N-0000-EE	1

PARTS LIST

UNLESS OTHERWISE SPECIFIED			ORIGINATOR		
FRACTIONS	DECIMALS	ANGLES	DRAWN	B. WISNER	01-15-2004
+/-	+/-	+/-	CHECKED		
			APPROVED		

1. BREAK ALL SHARP EDGES 1/64 MAX.
2. DO NOT SCALE DRAWING
3. DIMENSIONING IN ACCORD WITH ANSI Y14.5 STD'S

√ MAX. ALL MACHINED SURFACES

USED ON

MATERIAL

FERMI NATIONAL ACCELERATOR LABORATORY
UNITED STATES DEPARTMENT OF ENERGY

AP-0 COLLECTION LENS WATER SYSTEM SCHEMATIC

SCALE	FILMED	DRAWING NUMBER	REV.
			B