FERMILAB

ENGINEERING NOTE

SECTION	PROJECT	SERIAL-CATEGORY	PAGE

SUBJECT COLL LENS WATER SKID FLOWMETERS
COLL LENS WATER SKID
INTERCONNECTION SCHEMATIC

NAME B. WISNER

DATE 04-23-2008 | REVISION DATE 5-3-2010

D:LNWM1, D:LNWM2, D:LNWM6

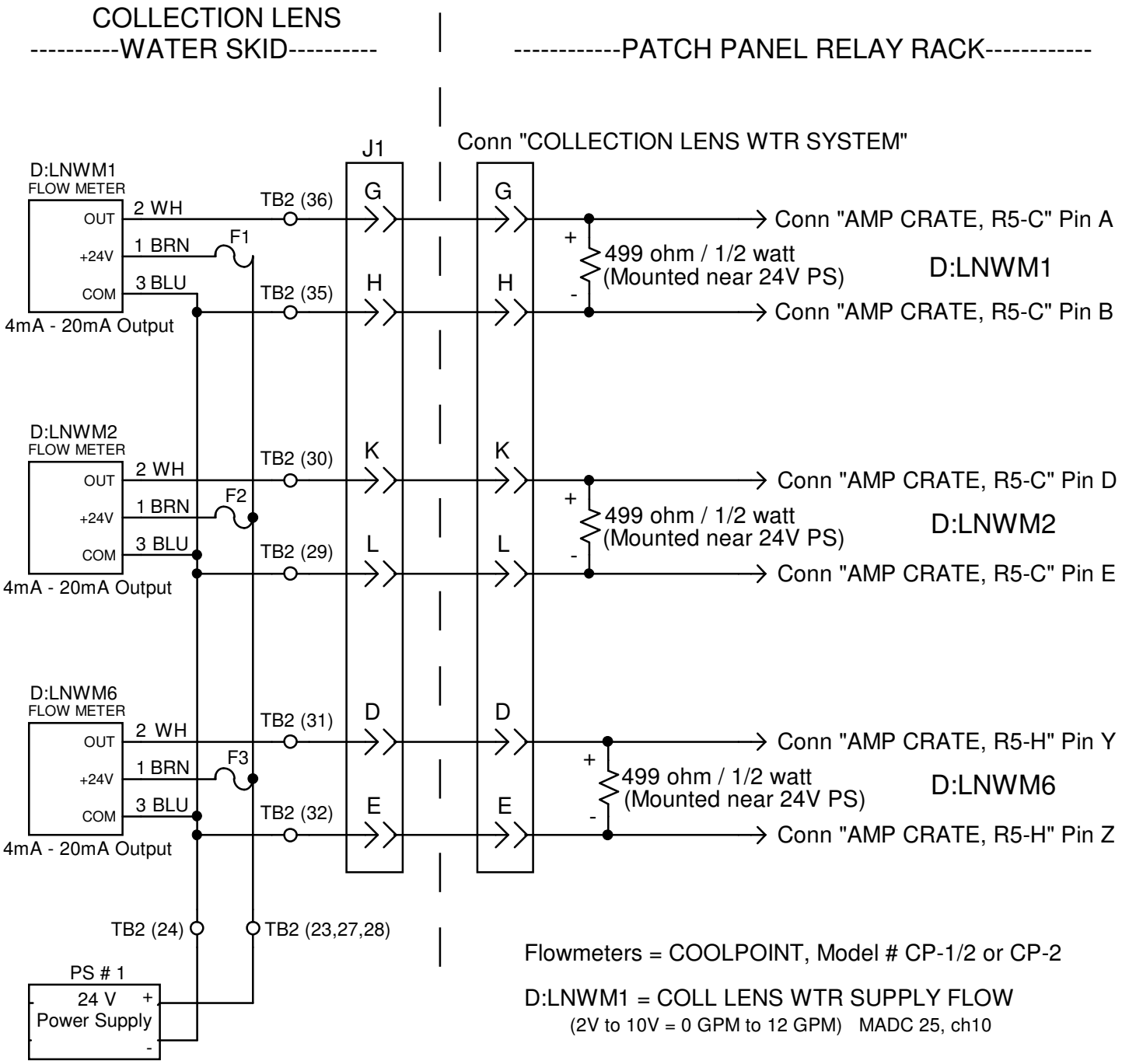

Flowmeters = COOLPOINT, Model # CP-1/2 or CP-2

D:LNWM1 = COLL LENS WTR SUPPLY FLOW
(2V to 10V = 0 GPM to 12 GPM) MADC 25, ch10

D:LNWM2 = COLL LENS WTR RETURN FLOW
(2V to 10V = 0 GPM to 12 GPM) MADC 25, ch11

D:LNWM6 = COLL LENS XFRMR WTR RETURN FLOW
(2V to 10V = 0 GPM to 12 GPM) MADC 24, ch9

F1-F3 = Resettable Fuse, 0.5A
Tyco Electric Circuit, Part # RXEF050