FERMILAB

ENGINEERING NOTE

SECTION	PROJECT	SERIAL-CATEGORY	PAGE

SUBJECT: COLL LENS CONDUCTIVITY METER
COLL LENS WATER SKID
INTERCONNECTION SCHEMATIC

NAME: B. WISNER

DATE: 10-05-2009

REVISION DATE:

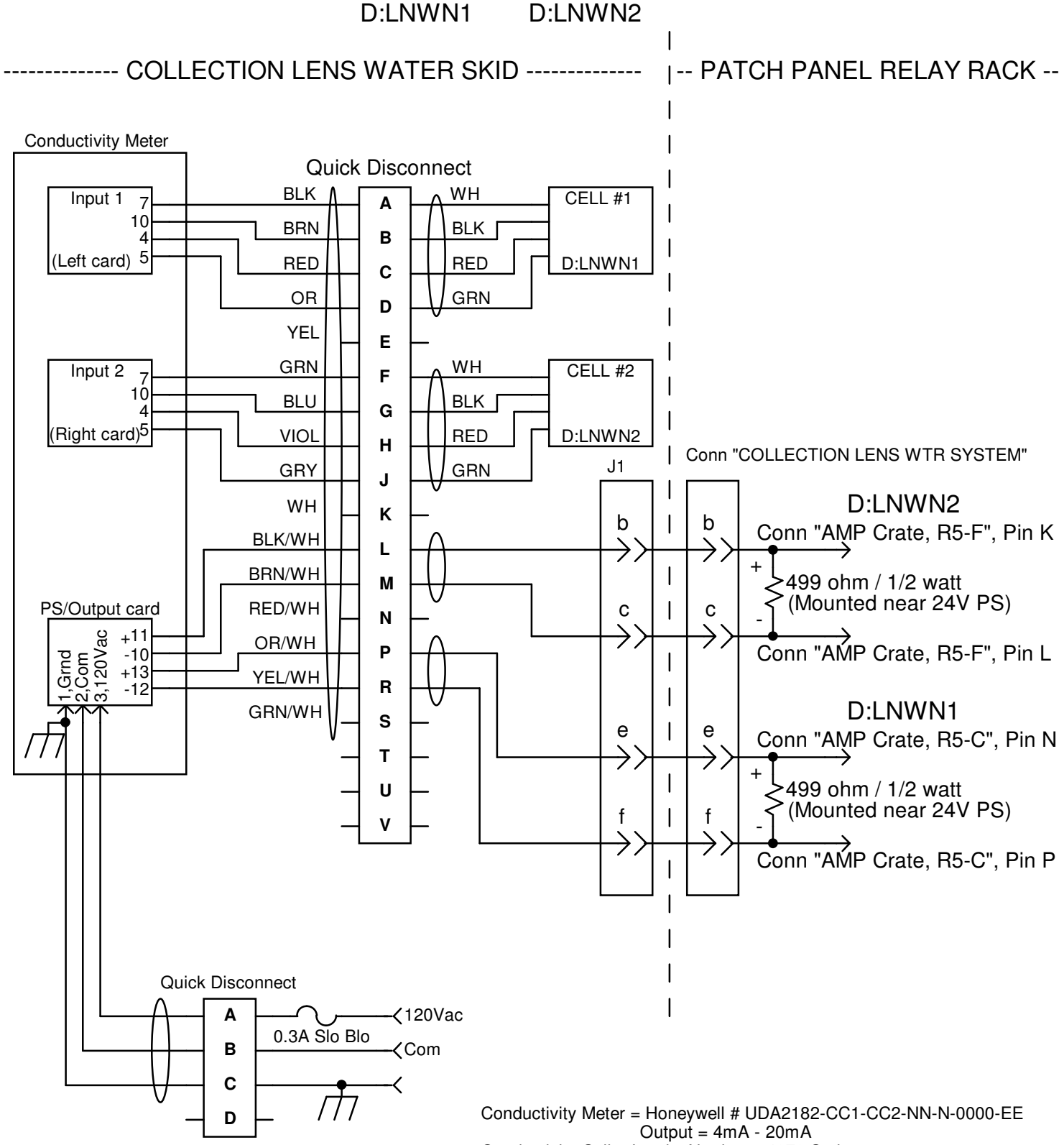

Conductivity Meter = Honeywell # UDA2182-CC1-CC2-NN-N-0000-EE
Output = 4mA - 20mA
Conductivity Cell = Leeds+Northrup, 4973 Series
D:LNWN1, Coll Lens Water Return Conductivity
2V to 10V = 0 umho to 2 umho
D:LNWN2, Coll Lens Deionized Water Conductivity
2V to 10V = 0 umho to 2 umho