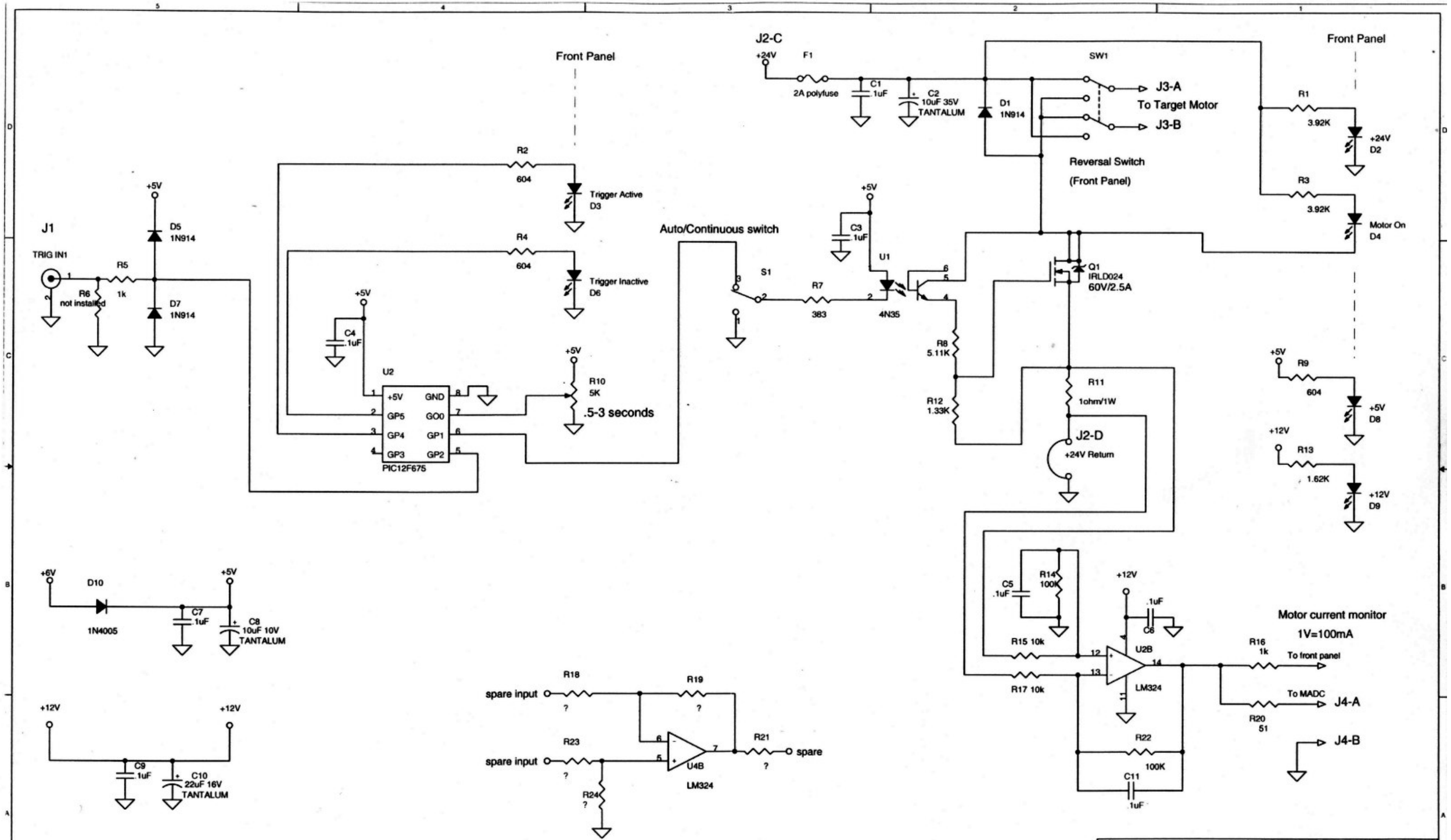

Title	Target Motor Driver	
Size B	Document Number 8000-EB-288314	Rev A
Date: Thursday, March 24, 2005	Sheet 1 of 1	