Fermilab

Directorate

TECHNICAL SCOPE OF WORK
FOR THE 2013 – 2017 NEUTRINO PROGRAM

T- 1046

LBNE-NuMI Muon Detectors

August 15, 2013

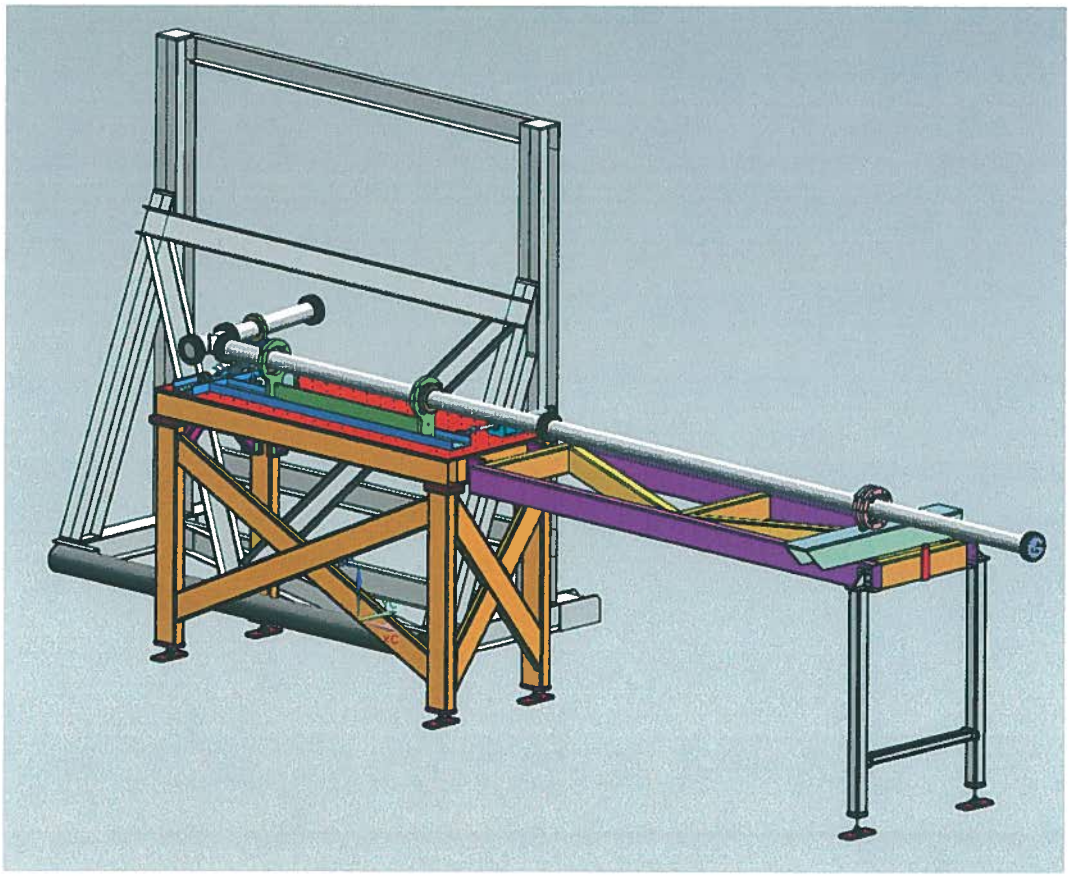

TABLE OF CONTENTS

I. Personnel and Institutions: **5**

II. Experimental Area, Beams and Schedule Considerations: **6**

2.1 Location **6**

2.2 Beam **6**

2.2.1 Beam Types and Intensities 6

2.2.2 Beam Sharing 6

2.3 Experimental Conditions **6**

2.3.1 Area Infrastructure 6

2.3.2 Electronics Needs 8

2.3.3 Description of Tests 8

2.4 Schedule **8**

III. Responsibilities by Institutions – Non Fermilab **10**

3.1 LANL, University of Colorado, Drexel University, University of California, Davis **10**

IV. Responsibilities by Institution – Fermilab **11**

4.1 Fermilab Accelerator Division: **11**

4.2 Fermilab Particle Physics Division: **11**

4.3 Fermilab Scientific Computing Division **11**

4.4 Fermilab ESH&Q Section **11**

4.5 Fermilab LBNE Section **11**

V. Summary of Costs **12**

General Considerations **13**

Reportable Elements and Isotopes / Weight Units / Rounding **19**

INTRODUCTION

This is a technical scope of work (TSW) that concerns Fermi National Accelerator Laboratory (Fermilab) and the experimenters of LBNE who have committed to participate in muon detector prototype tests to be carried out in the NuMI alcoves during the 2013 – 2017 Fermilab Neutrino program.

The TSW is intended primarily for the purpose of recording expectations for budget estimates and work allocations for Fermilab, the funding agencies and the participating institutions. It reflects an arrangement that currently is satisfactory to the parties; however, it is recognized and anticipated that changing circumstances of the evolving research program will necessitate revisions. The parties agree to modify this memorandum to reflect such required adjustments. Actual contractual obligations will be set forth in separate documents.

This TSW fulfills Article 1 (facilities and scope of work) of the User Agreements signed (or still to be signed) by an authorized representative of each institution collaborating on this experiment.

Description of Muon Prototype Detectors and Tests:

The LBNE Near Detector Beam Line Measurements (LBNE-ND-BLM) muons systems are devices intended to measure the rate and spectrum of muons created in the LBNE beam decay tunnel, and that penetrate the LBNE absorber. The LBNE muon system designs currently include variable-pressure gas Cherenkov detectors, stopped muon detectors, and ion chamber detectors. The long-term program for LBNE muon systems is to test prototype detectors in the second NuMI alcove (alcove-2), and following those successful tests, full scale final devices are planned to be installed into NuMI alcove-1 directly behind the NuMI beam absorber. They will operate and function during the remainder of the Nova run until they are needed for LBNE, at which time they will be moved to the LBNE beam. The purpose of the full-scale operation in the NuMI beam is to operate the LBNE devices in a well-understood muon beam similar to the LBNE setting. Since the current LBNE design has no near neutrino detector, it is desirable to translate the beam calculation at NuMI to the beam calculation at LBNE, and to use the muon systems as a cross check on the translation.

A plan has been developed to test LBNE muon-system prototypes in the NuMI muon alcoves in a setting that is expected to be very similar to the LBNE environment. In collaboration with Fermilab's Accelerator division, the experimenters are currently installing infrastructure that will enable quick installation of detector prototypes and associated instrumentation: a stand to hold the detectors, electronics racks, signal cable plant, vacuum systems, high pressure gas systems, and control systems. With the anticipated startup of the NuMI beam in the summer of 2013, the infrastructure installation has been completed in June 2013. This will be followed by the installation and operation of prototype detectors in 2013, 2014, and possibly 2015. This TSW is intended to cover the initial prototyping phase in detail, and will be updated as final devices are engineered and plans to install them in NuMI muon alcove-1 solidify. It should be noted that

most of the work and effort relating to this prototype development takes place in Accelerator Division (AD) spaces. While AD has been the primary entity involved in the engineering of the infrastructure necessary to perform the tests, the experimenters also greatly appreciate the support of the Particle Physics Division (PPD) in this endeavor, and look forward to further support in the future.

PERSONNEL AND INSTITUTIONS:

Muon Detector Spokesperson: Geoffrey Mills

Fermilab liaison: Mike Andrews

The group members at present are:

	Institution	Country	Collaborator	Rank/Position	Other Commitments
1.	Los Alamos National Laboratory	USA	Geoffrey Mills	Neutrino Team Leader	MicroBooNE, NA61
2.	University of Colorado	USA	Alysia Marino	Professor	T2K, NA61, Teaching
3	University of Colorado	USA	Eric Zimmerman	Professor	T2K, Teaching
4.	Drexel University	USA	Charles Lane	Professor	Double Chooz, Teaching
5.	University of California, Davis	USA	Hans Bern	Engineer	T2K

II. EXPERIMENTAL AREA, BEAMS AND SCHEDULE CONSIDERATIONS:

2.1 LOCATION

2.1.1 The apparatus for the beam test(s) will be located in Alcove-2 of the MINOS Underground Area. Three different muon detector systems will be installed in the alcove. These include a Cherenkov detector, ionization chambers, and muon stopping detectors.

2.1.2 The electronics and gas system installation will be made into the rack area outside and near alcove-2 provided by Accelerator Division.

2.2 BEAM

2.2.1 BEAM TYPES AND INTENSITIES

Particles: muons
Intensity: ~10^7-10^8 muons/cm^2 / pulse
Total integrated flux: The experiment will use as much parasitic beam as is necessary to test prototype over the course of 2013 and 2014 for the prototype tests.

2.2.2 BEAM SHARING

The experiment will run completely parasitically to the MINOS+, NOvA, and MINERvA experiments currently using the neutrino beam. It will require access to alcove-2 (during scheduled NuMI beam stops), and regular access to the rack area outside of and adjacent to alcove-2. However, no specific requests for beam are believed to be necessary at this time.

The Cherenkov detector is a complex object, but averaged over the area of the flanges, in the beam direction, it is around 10cm of stainless steel. The radiation length in iron is around 1.76 cm, so that would give a rough estimate of 5.6 X0.

2.3 EXPERIMENTAL CONDITIONS

2.3.1 AREA INFRASTRUCTURE

Location of the experiment, underground, is depicted in Appendix I.

The prototype tests will require a certain amount of infrastructure in the NuMI muon alcove-2 area. Most of that infrastructure has been installed this spring, but will be described here for completeness. The detectors themselves require a stand to support them, with a total weight of roughly 1000 pounds in their final configuration. The stand is already in place, but it will be necessary to lift the detectors onto the stand when they are ready to be installed. The first

prototypes will be installed in 2013 and in 2014. The experimenters intend to begin initial operations in August 2013.

Figure 1 The stand (on the left side) for the LBNE-NuMI muon system prototypes as installed in alcove-2 is located behind the NuMI muon ion chamber array stand.

Figure 2 Racks and workspace for LBNE-NuMI muon tests near alcove-2.

The experimental layout consists of detector prototypes, which will be installed into Alcove-2. A stand has been constructed and installed into Alcove-2 to support and manipulate the detectors. A photograph of the detector stand is shown in Figure 1. The stand is designed to support the potential 1000 lb. load of the three detector systems at the center of the NuMI muon beam.

The electronics and electrical services, associated with operating the detectors and data acquisition (DAQ), will be located in the new alcove-2 rack area just behind the shielding blocks outside alcove-2. Figure 2 shows the rack area and workspace outside of alcove-2. There are two normal electronic racks that will contain DAQ electronics and computers. There is also an accelerator controls rack that will contain the readout modules for pressure gauges and thermocouples, and any control modules for the gas system (pressure/vacuum set points)

The experiment acknowledges that due to the nature of the underground environment, ground water seeps from the ceiling and walls and pools on the floor, and will take measures to protect their equipment as they see fit, while abiding by fire hazard codes.

2.3.2 Electronics Needs

All of the electronics needed for the prototype tests will be commercial, i.e. no non-commercial electronics are planned at this time. The installation of the racks was handled by Accelerator Division, who specified the rack protection system.

LBNE will eventually install a computer in one of the racks for data acquisition and monitoring purposes. The experimenters have not yet decided what operating system or version.

It might prove useful to use PREP equipment, the experimenters have need of HV-supply channels for ~10 PMTs (max) and for some simple NIM logic modules to provide a trigger for our waveform digitizers. The experimenters believe that the trigger signals are already available from an ACNET IRM module located in nearby racks. See Appendix II for summary of PREP equipment pool needs.

2.3.3 Description of Tests

Initially the experimenters anticipate setting up and testing equipment in MI-10 in July 2013 (AD space), and then moving underground in August or September 2013. The experimenters plan to operate initially from underground, but then move operations to a remote location via a network link to the local computer. The time frame for that move is yet to be determined. Until remote operations are established, the experimenters plan to spend short intervals of time (hours) making measurements over periods of roughly a week. The first such period is expected to be August 12-16, 2013.

2.4 Schedule

The experimenters plan to begin operations in August or September 2013, and continue through 2014 with tests. Since the experimenters use the NuMI beam parasitically, the experimenters do

not plan to make any specific beam requests at this time. The normal spectrum of NuMI operations should give us enough variability to map out the performance of our prototypes. The experimenters would ask to be made aware of any access opportunities that come up from time-to-time in NuMI operations, and whenever appropriate, be allowed to enter alcove-2 in order to maintain, upgrade, and replace equipment as needed.

The current schedule calls for assembly and testing of the Cherenkov prototype in July at Fermilab in MI-10. A stopped-muon counter prototype is being prepared at Drexel also. The experimenters plan to install and commission both of those detectors in August of this summer if the accelerator schedule permits it. Further stopped muon detectors and ion chamber prototypes will be developed and installed in FY14.

After the final design of the LBNE muon detectors is complete in 2015, a final installation of the LBNE muon detectors will be made into the area in front of muon alcove 1. They will be operated until such time as the LBNE muon alcoves become available, and then moved there for LBNE operations.

III. RESPONSIBILITIES BY INSTITUTIONS – NON FERMILAB

3.1 LANL, UNIVERSITY OF COLORADO, DREXEL UNIVERSITY, UNIVERSITY OF CALIFORNIA, DAVIS

- LBNE Project oversight (LANL)
- Prototype engineering of Cherenkov, ion chamber, and stopped muon detector systems (CU, Drexel, LANL)
- Data acquisition system (waveform readout) for detector systems and global DAQ (CU, Drexel, LANL, Davis)
- Operational organization including reviews, operation reports, interactions with other NuMI experiments (LANL, CU)
- Analysis of data, beam and detector simulations, and publication of measurements and test results (CU, Drexel, LANL)
- Logistics of detector operations, access of underground areas (LANL, CU)

IV. RESPONSIBILITIES BY INSTITUTION – FERMILAB

4.1 FERMILAB ACCELERATOR DIVISION:

4.1.1 Use of NuMI beam as outlined in Section II.
4.1.2 Maintenance of all existing standard beam line elements instrumentation, controls, clock distribution, and power supplies.
4.1.3 Connection to beams console and remote logging (ACNET) should be made available.
4.1.4 A beam-on-target trigger signal to insert into the experiment data stream.
4.1.5 Conduct a NEPA review of the experiment if needed
4.1.6 Provide day-to-day ESH&Q support/oversight/review of work and documents as necessary.
4.1.7 Provide safety training as necessary, with assistance from the ESH&Q Section.
4.1.8 Update/create ITNA's for users on the experiment.
4.1.9 Initiate the ESH&Q Operational Readiness Clearance Review and any other required safety reviews. [0.2 person-weeks]

4.2 FERMILAB PARTICLE PHYSICS DIVISION:

4.2.1 Technical support (crane/forklift/etc.) to assist in moving the experimental equipment into and out of the MINOS Underground Area. [0.4 person-weeks]

4.3 FERMILAB SCIENTIFIC COMPUTING DIVISION

4.3.1 Internet access underground/on surface.
4.3.2 See Appendix II for summary of PREP equipment pool needs.

4.4 FERMILAB ESH&Q SECTION

4.4.1 Assistance with safety reviews.
4.4.2 Provide safety training, with assistance from AD, as necessary for experimenters.

4.5 FERMILAB LBNE SECTION

4.5.1 Develop LBNE muon detectors
4.5.2 Personnel and materials as per the LBNE project plan

V. Summary of Costs

The cost for this prototype development effort will be born by the LBNE project and base funding associated with LBNE scientific effort. They are detailed in the LBNE project plan. The costs below are part of the LBNE project WBS structure, but pertain to Fermilab specific labor. All costs associated with the project may be obtained from LBNE project management.

Source of Funds [$K]	**Materials & Services**	**Labor** (person-weeks)
Particle Physics Division	0.0	0.4
Accelerator Division	0	3
Computing Sector	0	0
ES&H Section		0.2
Totals Fermilab	$0.0K	3.6

GENERAL CONSIDERATIONS

6.1 The responsibilities of the Spokesperson and the procedures to be followed by experimenters are found in the Fermilab publication "Procedures for Researchers": (http://www.fnal.gov/directorate/PFX/PFX.pdf). The Spokesperson agrees to those responsibilities and to ensure that the experimenters all follow the described procedures.

6.2 To carry out the experiment a number of Environmental, Safety and Health (ESH&Q) reviews are necessary. This includes creating an Operational Readiness Clearance document in conjunction with the standing Particle Physics Division committee. The Spokesperson will follow those procedures in a timely manner, as well as any other requirements put forth by the Division's Safety Officer.

6.3 The Spokesperson will ensure one person is on-call and available by phone at all times whenever the detector is being operated and that this person is knowledgeable about the experiment's hazards.

6.4 All regulations concerning radioactive sources will be followed. No radioactive sources will be carried onto the site or moved without the approval of the Fermilab ESH&Q section.

6.5 All items in the Fermilab Policy on Computing will be followed by the experimenters. (http://computing.fnal.gov/cd/policy/cpolicy.pdf).

6.6 The Spokesperson will undertake to ensure that no PREP or computing equipment be transferred from the experiment to another use except with the approval of and through the mechanism provided by the Computing Sector management. The Spokesperson also undertakes to ensure no modifications of PREP equipment take place without the knowledge and written consent of the Computing Sector management.

6.7 The experimenters will be responsible for maintaining both the electronics and the computing hardware supplied by them for the experiment. Fermilab will be responsible for repair and maintenance of the Fermilab-supplied electronics listed in Appendix II. Any items for which the experiment requests that Fermilab performs maintenance and repair should appear explicitly in this agreement.

At the completion of the experiment:

6.8 The Spokesperson is responsible for the return of all PREP equipment, computing equipment and non-PREP data acquisition electronics. If the return is not completed after a period of one year after the end of running the Spokesperson will be required to furnish, in writing, an explanation for any non-return.

6.9 The experimenters agree to remove their experimental equipment as the Laboratory requests them to. They agree to remove it expeditiously and in compliance with all ESH&Q requirements, including those related to transportation. All the expenses and personnel for the removal will be borne by the experimenters unless removal requires facilities and personnel not able to be supplied by them, such a rigging, crane operation, etc.

6.10 The experimenters will assist Fermilab with the disposition of any articles left in the offices they occupied.

6.11 An experimenter will be available to report on the test beam effort at a Fermilab All Experimenters' Meeting.

SIGNATURES:

_____ / / 2013

Geoffrey Mills, Spokesperson for Prototype Muon Detector Test

APPENDIX I: AREA LAYOUT

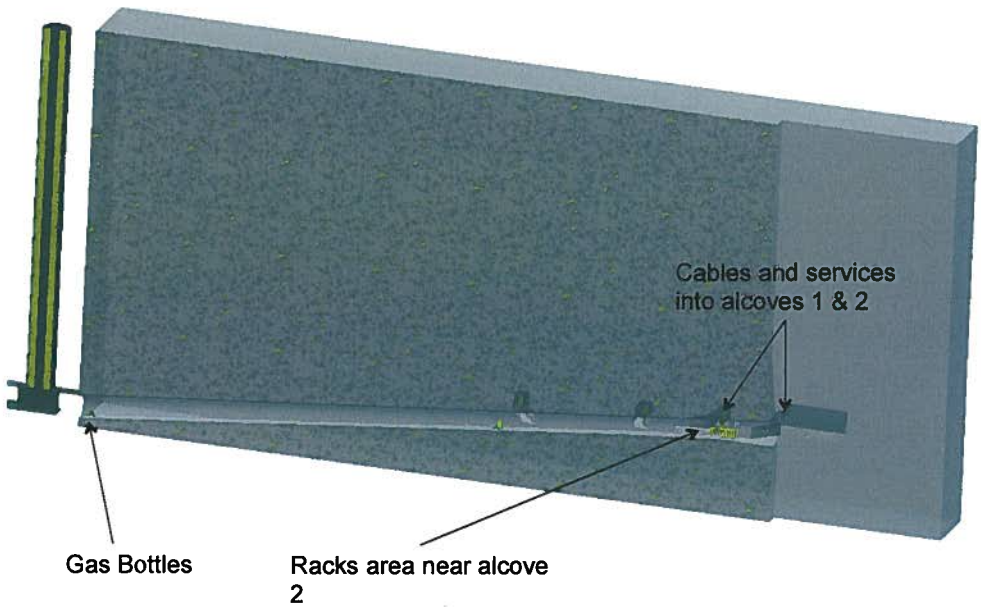

Figure 3 NuMI underground area overview section that shows the location of the gas bottles for the Cherenkov counter and of alcove-2.

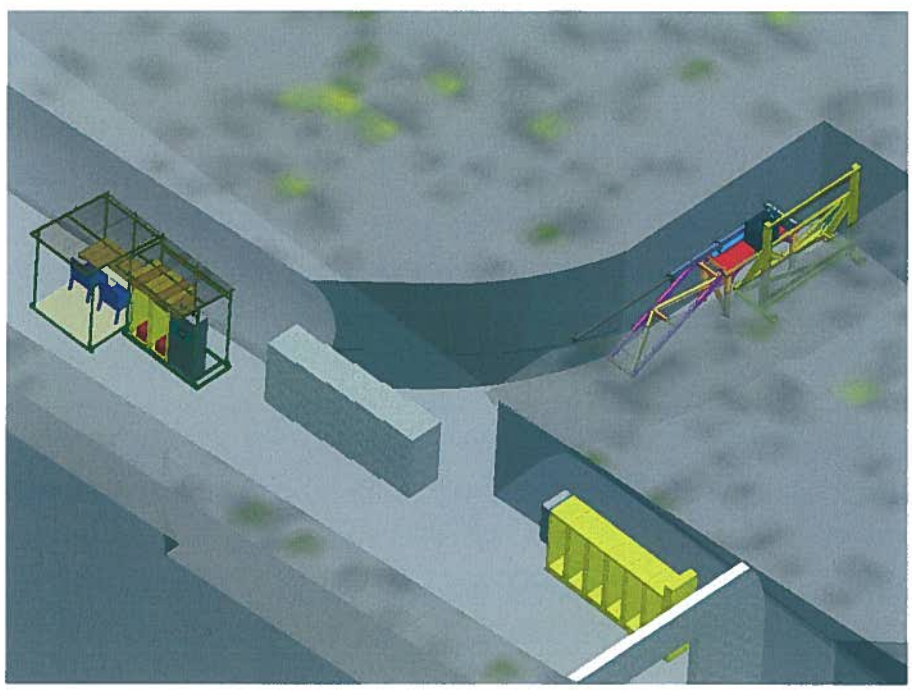

Figure 4 Overview of Alcove-2 area with racks and workspace for LBNE-NuMI muon tests.

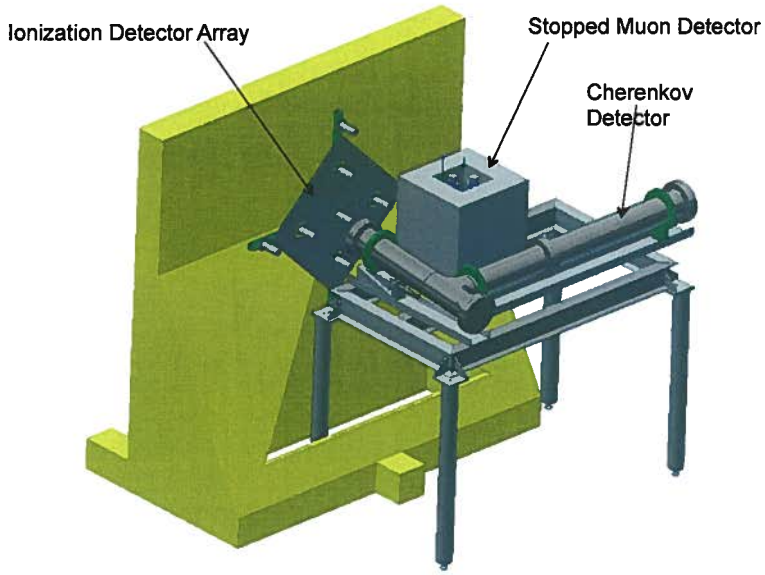

Figure 5 An older preliminary design of table and detectors for LBNE-NuMI muon tests that shows all of the anticipated detectors: the Cherenkov detector, stopped muon detector, and ion chambers.

APPENDIX II: EQUIPMENT NEEDS

Provided by experimenters and AD:

- Digital scope for waveform readout
- Computer for DAQ
- Controls rack, crate, readout modules, CPU module
- IRM signals for triggering

PREP EQUIPMENT POOL:

Quantity	Description
1	150 NIM Bin
1	201 NIM Bin Power Supply
2	LeCroy 688 NIM/TTL Converter
2	LeCroy Dual 4-fold Logic Unit
2	LeCroy 222 Gate Generator Unit
1	Berkeley cow and PS

APPENDIX III: - HAZARD IDENTIFICATION CHECKLIST

Items for which there is anticipated need have been checked. See next page for detailed descriptions of categories.

Flammable Gases or Liquids		Other Gas Emissions		Hazardous Chemicals		Other Hazardous /Toxic Materials
Type:		Type:	Dry air, nitrogen, argon		Cyanide plating materials	List hazardous/toxic materials planned for use in a beam line or an experimental enclosure:
Flow rate:		Flow rate:	Variable (2 cc/min average)		Hydrofluoric Acid	
Capacity:		Capacity:	50 liters at STP, (1000 liters at 20 atm)		Methane	
Radioactive Sources		**Target Materials**			photographic developers	
	Permanent Installation		Beryllium (Be)		PolyChlorinatedBiphenyls	
	Temporary Use		Lithium (Li)		Scintillation Oil	
Type:			Mercury (Hg)		TEA	
Strength:			Lead (Pb)		TMAE	
Lasers			Tungsten (W)		Other: Activated Water?	
	Permanent installation		Uranium (U)			
	Temporary installation		Other:	**Nuclear Materials**		
	Calibration	**Electrical Equipment**		Name:		
	Alignment		Cryo/Electrical devices	Weight:		
Type:			Capacitor Banks	**Mechanical Structures**		
Wattage:		X	High Voltage (50V)		Lifting Devices	
MRF Class:			Exposed Equipment over 50 V		Motion Controllers	Cherenkov counter motion controllers
			Non-commercial/Non-PREP	X	Scaffolding/ Elevated Platforms	Detector Stand (5 ft height)
			Modified Commercial/PREP		Other:	
Vacuum Vessels		**Pressure Vessels**		**Cryogenics**		
Inside Diameter:	3.78 in.	Inside Diameter:	3.78 in.		Beam line magnets	
Operating Pressure:	0-1.0 atm	Operating Pressure:	1.0-20.0 atm		Analysis magnets	
Window Material:	SS	Window Material:	SS		Target	
Window Thickness:	0.5 inch	Window Thickness:	o.5 inch		Bubble chamber	

OTHER GAS EMISSION

Greenhouse Gasses (Need to be tracked and reported to DOE)

- ❑ Carbon Dioxide, including CO_2 mixes such as Ar/CO_2
- ❑ Methane
- ❑ Nitrous Oxide
- ❑ Sulfur Hexafluoride
- ❑ Hydro fluorocarbons
- ❑ Per fluorocarbons
- ❑ Nitrogen Trifluoride

NUCLEAR MATERIALS

Reportable Elements and Isotopes / Weight Units / Rounding

Name of Material	MT Code	Reporting Weight Unit Report to Nearest Whole Unit	Element Weight	Isotope Weight	Isotope Weight %
Depleted Uranium	10	Whole Kg	Total U	U-235	U-235
Enriched Uranium	20	Whole Gm	Total U	U-235	U-235
Plutonium-242[1]	40	Whole Gm	Total Pu	Pu-242	Pu-242
Americium-241[2]	44	Whole Gm	Total Am	Am-241	–
Americium-243[2]	45	Whole Gm	Total Am	Am-243	–
Curium	46	Whole Gm	Total Cm	Cm-246	–
Californium	48	Whole Microgram	–	Cf-252	–
Plutonium	50	Whole Gm	Total Pu	Pu-239+Pu-241	Pu-240
Enriched Lithium	60	Whole Kg	Total Li	Li-6	Li-6
Uranium-233	70	Whole Gm	Total U	U-233	U-232 (ppm)
Normal Uranium	81	Whole Kg	Total U	–	–
Neptunium-237	82	Whole Gm	Total Np	–	–
Plutonium-238[3]	83	Gm to tenth	Total Pu	Pu-238	Pu-238
Deuterium[4]	86	Kg to tenth	D_2O	D_2	
Tritium[5]	87	Gm to hundredth	Total H-3	–	–
Thorium	88	Whole Kg	Total Th	–	–
Uranium in Cascades[6]	89	Whole Gm	Total U	U-235	U-235

[1] Report as Pu-242 if the contained Pu-242 is 20 percent or greater of total plutonium by weight; otherwise, report as Pu 239-241.

[2] Americium and Neptunium-237 contained in plutonium as part of the natural in-growth process are not required to be accounted for or reported until separated from the plutonium.

[3] Report as Pu-238 if the contained Pu-238 is 10 percent or greater of total plutonium by weight; otherwise, report as plutonium Pu 239-241.

[4] For deuterium in the form of heavy water, both the element and isotope weight fields should be used; otherwise, report isotope weight only.

[5] Tritium contained in water (H2O or D2O) used as a moderator in a nuclear reactor is not an accountable material.

[6] Uranium in cascades is treated as enriched uranium and should be reported as material type 89.

_____ / / 2013

James Strait, LBNE Project Director

_____ 8 / 19 / 2013

Michael Lindgren, Particle Physics Division, Fermilab

_____ 8 22 / 2013

Roger Dixon, Accelerator Division, Fermilab

_____ 8 / 20 / 2013

Robert Roser, Scientific Computing Division, Fermilab

_____ 8 23 / 2013

Martha Michels, ESH&Q Section, Fermilab

_____ 8 / 23 / 2013

Greg Bock, Associate Director for Research, Fermilab

_____ 8 / 28 / 2013

Stuart Henderson, Associate Director for Accelerators, Fermilab

_____ 8 / 21 / 2013
James Strait, LBNE Project Director

_____ / / 2013
Michael Lindgren, Particle Physics Division, Fermilab

_____ / / 2013
Roger Dixon, Accelerator Division, Fermilab

_____ / / 2013
Robert Roser, Scientific Computing Division, Fermilab

_____ / / 2013
Martha Michels, ESH&Q Section, Fermilab

_____ / /2013
Greg Bock, Associate Director for Research, Fermilab

_____ / /2013
Stuart Henderson, Associate Director for Accelerators, Fermilab