Fermilab

Directorate

TECHNICAL SCOPE OF WORK
FOR THE 2014 FERMILAB TEST BEAM FACILITY PROGRAM

T-1044

sPHENIX Calorimetry Tests

December 19, 2013

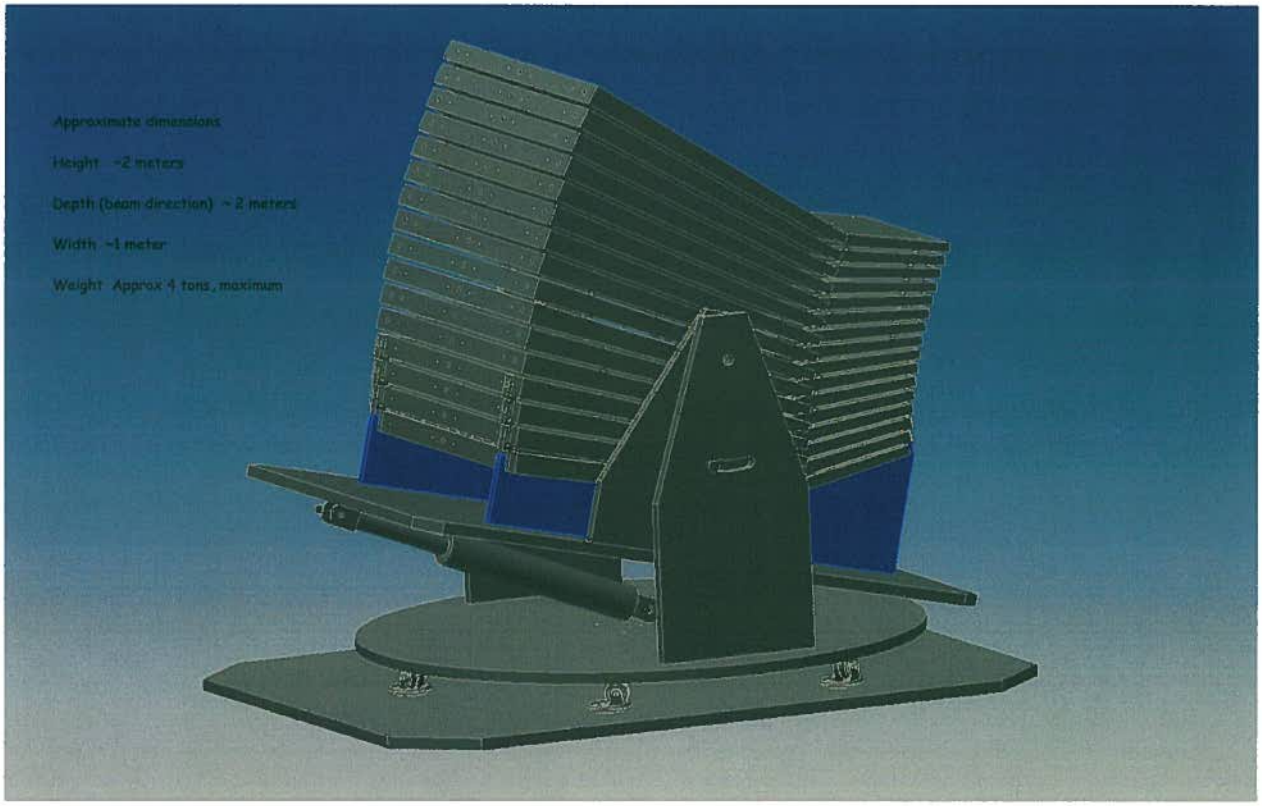

TABLE OF CONTENTS

	INTRODUCTION		3
I.	PERSONNEL AND INSTITUTIONS		4
II.	EXPERIMENTAL AREA, BEAMS AND SCHEDULE CONSIDERATIONS		5
III.	RESPONSIBILITIES BY INSTITUTION – NON FERMILAB		12
IV.	RESPONSIBILITIES BY INSTITUTION – FERMILAB		12
	4.1 FERMILAB ACCELERATOR DIVISION	12	
	4.2 FERMILAB PARTICLE PHYSICS DIVISION	12	
	4.3 FERMILAB COMPUTING SECTOR	13	
	4.4 FERMILAB ESH&Q SECTION	13	
V.	SUMMARY OF COSTS		14
VI.	GENERAL CONSIDERATIONS		15
	SIGNATURES		16
	APPENDIX I – MT6 AREA LAYOUT		17
	APPENDIX II – EQUIPMENT NEEDS		18
	APPENDIX III – HAZARD IDENTIFICATION CHECKLIST		19

TSW for T-1044: **sPHENIX Calorimetry Tests**

INTRODUCTION

This is a technical scope of work (TSW) between the Fermi National Accelerator Laboratory (Fermilab) and the experimenters of PHENIX collaboration who have committed to participate in beam tests to be carried out during the FY2014 Fermilab Test Beam Facility program.

The TSW is intended primarily for the purpose of recording expectations for budget estimates and work allocations for Fermilab, the funding agencies and the participating institutions. It reflects an arrangement that currently is satisfactory to the parties; however, it is recognized and anticipated that changing circumstances of the evolving research program will necessitate revisions. The parties agree to modify this scope of work to reflect such required adjustments. Actual contractual obligations will be set forth in separate documents.

This TSW fulfills Article 1 (facilities and scope of work) of the User Agreements signed (or still to be signed) by an authorized representative of each institution collaborating on this experiment.

Description of Detector and Tests:

The sPHENIX upgrade to the PHENIX detector is designed to study jets in heavy ion collisions at the Relativistic Heavy Ion Collider (RHIC) at Brookhaven National Laboratory and address questions about the nature of the perfect fluid quark-gluon plasma. The upgrade consists of a 2 Tesla superconducting magnetic solenoid of radius 70 cm surrounded by electromagnetic and hadronic calorimeters with uniform coverage over a rapidity range of $|\eta| < 1$ and 2π in azimuth. The sPHENIX detector concept takes advantage of technological developments to enable a compact design with excellent performance. A tungsten-scintillator electromagnetic calorimeter read out with silicon photomultipliers (SiPMs) allows for a physically thin device, which can operate in a magnetic field, without the bulk of photomultiplier tubes and the need for high voltage distribution. The smaller electromagnetic calorimeter also allows the hadron calorimeter to be less massive, and the use of silicon photomultipliers for the hadron calorimeter allow for nearly identical electronic readout for the two major systems.

The requirements for the sPHENIX electromagnetic calorimeter lead to a design that is compact (i.e. has a small Molie`re radius and short radiation length), has a high degree of segmentation (0.024×0.024 in η and φ), and can be built at a reasonable cost. Since the calorimeter will be located just outside the coil of the solenoid, it will also have to operate in the rather strong fringe field of the magnet. This has lead to an electromagnetic calorimeter design consisting of alternating layers of tapered tungsten plates and scintillating fibers. The light fibers are closely packed together at the front of the detector and fan out at the back to make the device projective. Fibers are grouped together to form individual towers and are coupled to light mixing blocks to randomize the light, which is read out by SiPMs mounted on the mixing block.

The HCal hadronic calorimeter, a key element of sPHENIX, performance requirements are directly tied to the physics goals of sPHENIX. The focus of sPHENIX on measuring jets and dijets in heavy ion and proton collisions leads to a requirement of good energy resolution, $\sigma_E/E =$ 100%/ sqrt(E) and transverse segmentation of the HCal, $\Delta\eta \times \Delta\varphi \approx 0.1 \times 0.1$ over a rapidity range of $|\eta| < 1.1$ with minimal dead area. The combination of the EMCal and HCal needs to be

at least $6\lambda_{int}$ lengths deed in order to absorb 97% of impinging hadrons with momenta below 50GeV/c. The electromagnetic calorimeter is □ $1\lambda_{int}$ thick, so an iron-scintillator hadronic calorimeter should be □ $5\lambda_{int}$ deep. The thickness of the HCal is driven by physics needs, but these needs dictate a device of sufficient thickness that, with careful design, the hadronic calorimeter can also serve as the return yoke for the solenoid.

These performance requirements lead to an HCal design that consists of 2 sections, inner and outer, 1.5 and 3.5 interactions lengths deep respectively. Both in the inner and outer segments are constructed of tapered iron absorber plates, tilted $\pm 5^{\circ}$ with respect to a radius vector perpendicular to the beam axis. The plates for the inner and outer sections are tilted in opposite directions resulting in a 10° angle with respect to each other and staggered by half the thickness of the plates. The gaps between the iron gaps are 8mm wide and contain individually wrapped 7 mm thick scintillating tiles with a diffuse reflective coating and embedded wavelength shifting fibers following a serpentine path. Fibers from the tiles forming a tower are coupled directly to a SiPM mounted on the detector for readout.

The goals for this test beam experiment are to verify the performance of the electromagnetic and hadronic calorimeters for hadrons with energies ranging from a few GeV to 50GeV and a variety of geometrical orientations of the detectors to the impinging particles, In addition, the tests will allow a testing of the electronics that are being designed for the calorimeter readout. In order to accomplish these goals, the experimenters anticipate an initial 5 weeks effort at the M-Test facility. The first 3 weeks would be devoted to detector assembly and testing, followed by 2 weeks of beam tests. Details of the proposed schedule can be found in Section 2.4.

1. PERSONNEL AND INSTITUTIONS:

Spokesperson: Eric Mannel

Lead Experimenter in charge of beam tests: John Haggerty

Fermilab Experiment Liaison Officer: Aria Soha

The group members at present are:

	Institution	Country	Collaborator	Rank/Position	Other Commitments
1.1	Brookhaven National Laboratory	USA	Achim Franz	Scientist	PHENIX
			Mickey Chiu	Scientist	PHENIX
			John Haggerty	Scientist	PHENIX
			Edouard Kistenev	Scientist	PHENIX
			Eric Mannel	Scientist	PHENIX
			Martin Purschke	Scientist	PHENIX
			Chris Pinkenburg	Scientist	PHENIX
			Ann Sickles	Scientist	PHENIX
			Craig Woody	Scientist	PHENIX
			Bob Azmoun	Physics Associate	PHENIX
			Sean Stoll	Physics Associate	PHENIX
			Steve Boose	Elect. Engineer	PHENIX
			Don Lynch	Mech. Engineer	PHENIX
			Rich Ruggerio	Design Engineer	PHENIX
			Michael Lenz	Technician	PHENIX
1.2	Georgia State University	USA	Xiaochun He	Professor	PHENIX
			Liang Xue	Post-Doc	PHENIX
1.3	Oak Ridge National Laboratory	USA	Ken Read	Professor	PHENIX
			David Silvermyr	Scientist	PHENIX
			Paul Stankus	Scientist	PHENIX
			Matt Wysocki	Post-Doc	PHENIX
1.4	Ohio University	USA	Justin Frantz	Professor	PHENIX
1.5	University of Colorado	USA	Jamie Nagle	Professor	PHENIX
			Andrew Dare	Post-Doc	PHENIX
			Darren McGlinchey	Post-Doc	PHENIX
			Theo Koblesky	Graduate Student	PHENIX
			Shawn Beckman	Undergraduate	PHENIX

II. EXPERIMENTAL AREA, BEAMS AND SCHEDULE CONSIDERATIONS:

2.1 LOCATION

2.1.1 The beam test(s) will take place in the MT6.2D area on the concrete blocks currently positioned there.

2.1.2 The experimenters request additional space, 3m by 4m outside the beam line enclosure for initial setup and debugging of the readout system. The space should have access to electrical power for electronics, plus a 220-3phase AC outlet for the detector table, 2 tables to serve as work surfaces, and 1 standard height rack. In addition a cabinet for storage will be needed.

2.2 BEAM

2.2.1 BEAM TYPES AND INTENSITIES

Energy of beam: 1 GeV – 60 GeV
Particles: pions/muons/electrons
Intensity: 10k – 100k in units of particles/ 4 sec spill
Beam spot size: about $1cm^2$

2.2.2 BEAM SHARING

During dedicated running, limited running of parasitic upstream experiments will be considered provided they do not insert a significant amount of material in the beam, and can be readily moved out of the beam for cross calibration to understand the effects of the material presented. Given the type of detector, electromagnetic and hadronic calorimetry and being located in the downstream portion of the MT6.2 test area, downstream parasitic operations are not possible.

In the beam direction, the EMCal is $\sim 18X_0$ and 1 λ_{int}, and the HCal is $\sim 35\ X_0$ and 5 λ_{int} in length.

2.2.3 RUNNING TIME

The experimenters request a total of 5 weeks time, during the period Jan 15, 2014 to Feb 25, 2014. The first 2 weeks are for parasitic setup and testing outside the MTest beam line and the last 3 weeks are for final installation, commissioning and running. During initial setup the experimenters request parasitic access to the test area for setup and early commissioning of the detectors and associated electronics.

The experimenters anticipate running during the standard operational hours of the M-Test beam line. During the initial startup phase, frequent accesses of varying length are anticipated to commission the system. Once commissioned, the experimenters anticipate several accesses per day to re-position the detector to study geometrical properties of the detector and changes in the

beam tune to understand the energy response of the detectors. See section 2.4 for total run time and long-term schedule.

2.3 Experimental Conditions

2.3.1 Area Infrastructure

The sPHENIX HCAL is a steel-scintillator calorimeter measuring 1.2m x 1.7m x 1.3m (w x d x h), and weighing an estimated 8,000 lbs. with support structure and is shown in Figure 1. The support structure allows it to rotate about the x and y-axis. The structure sits on a moveable lift table that will allow it to move horizontally along the x-axis (perpendicular to the beam) and vertically along the y-axis. The HCal consists of 16 towers (4x4) with Silicon Photomultiplier (SiPM) readout on both the front and back of the detector. The SiPMs and associated temperature compensating electronics will be mounted directly on the HCal with analog signals being driven over shielded cable to digitizers located in an electronics crate located near the detector. The HCal will have a total of 32 readout channels.

Surrounding 5 sides of the detector will be scintillator panels to measure the energy leakage from the HCal. Each panel will be readout by a PMT using the same electronics as the SiPMs, for a total of 5 additional readout channels.

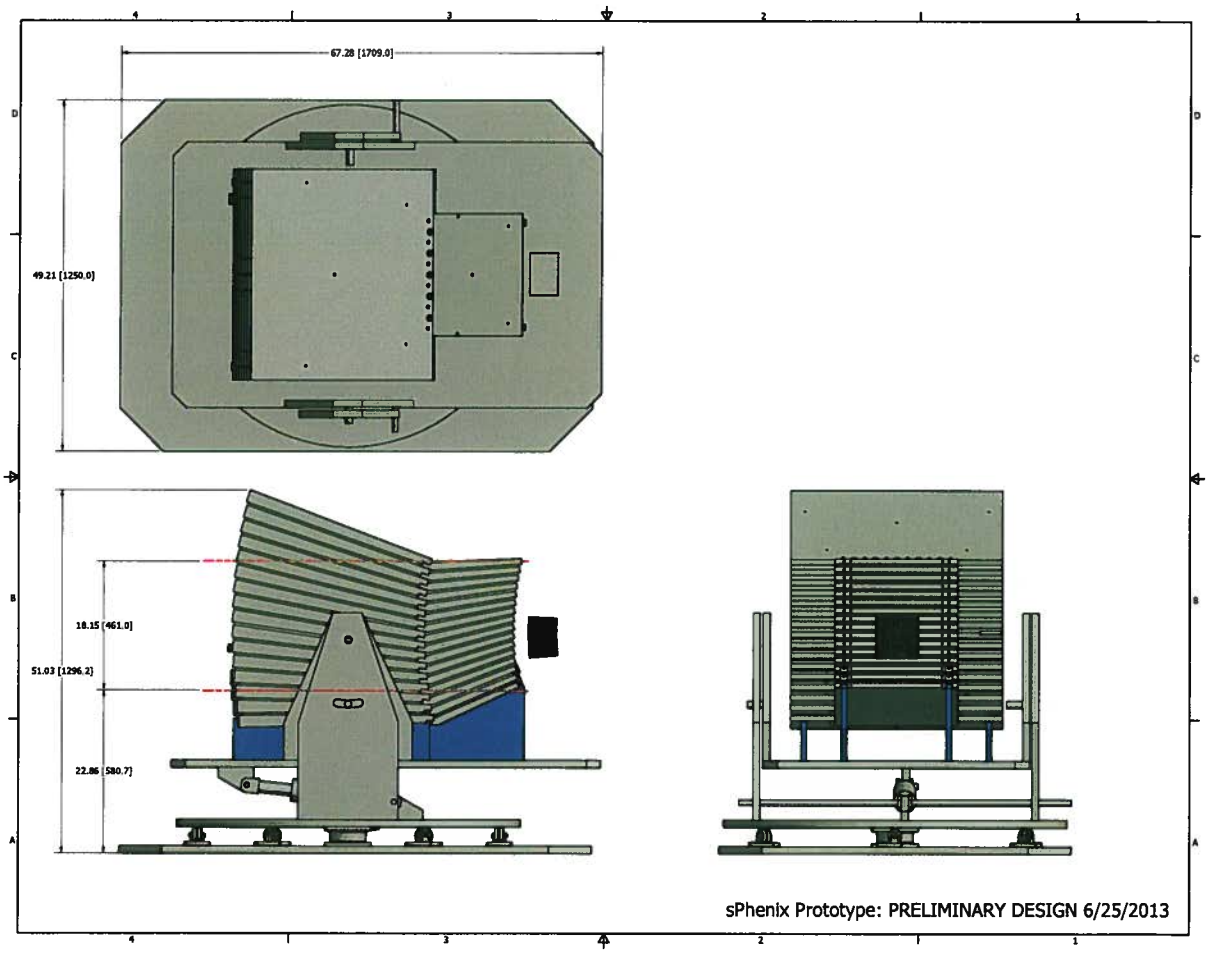

Figure 1: HCal prototype module drawing on support base. The base allows the detector to be rotated about the vertical axis and tilted about the horizontal axis. Not shown are scintillator panels mounted on 5 sides to measure leakage energy. Shown in front of the HCal is the approximate location of the EMCal. Not shown is the support stand for the EMCal which will be attached to the base plate.

Surrounding the HCal on 5 sides will be scintillator panels (not shown in the figure) to measure leakage energy from each side. Each panel will be readout with a standard PMT with the analog signals digitized in local crate. There are a total of 5 channels for the scintillator panels.

The sPHENIX electromagnetic calorimeter is a tungsten-scintillating fiber calorimeter measuring approximately 18 x 18 x 13 cm^3 and weighing approximately 100 lbs. 1 mm diameter scintillating fibers are sandwiched between 2 tapered tungsten plates. The fibers are held between the plates with glue. Multiple tungsten-fiber sandwiches are then glued together to form the electromagnetic calorimeter. A 7x7 array of 2x2 cm^2 mixing blocks is attached to the downstream end of the EMCal and readout using SiPMs. The EMCal will be mounted on a stand in front of the HCal and allow it to move horizontally and vertically with respect to the HCal to allow it to remain on the beam line for different orientations of the HCal as it moved. The EMCal is shown in figure 1. The EMCal will use the same electronics as the HCal, with a total of 49 channels of readout electronics.

A common electronics design, as described in section 2.3.2 reads out both the HCal and EMCal. All triggered digitized signals will be readout by a PHENIX DAQ system located in the control room, and capable of 7KHz operation.

The experimenters request the use of the MWPC tracking stations and associated readout electronics. Location of chambers will be upstream of the HCal and EMCal to provide tracking of the incident beam particles. Positioning of the tracking station locations should be selected to give an impact position on the EMCal and HCal modules to better then 1mm. The location of the final tracking station needs to provide sufficient space around the EMCal and HCal modules to allow them to be repositioned for geometrical studies.

Additional instrumentation needs include the use of a pb-glass block and phototube for cross calibration of EMCal energy response. Two scintillator trigger counters (including PMT's), measuring approximately 1x1 in^2, and use of the differential Cerenkov counter for electron ID up to 8 GeV.

The experiment will also need two 220V 3-phase AC outlets installed, one in the electronics room, and one in the requested pre-beam work area.

2.3.2 Electronics and Computing Needs

The HCal and EMCal readout is based on Silicon Photomultipliers (SiPMs) from Hamamatsu. A local temperature compensation circuit monitors the local temperature of the SiPM and adjusts the SiPM bias voltage to provide constant gain. SiPMs gains have a linear dependency of the gain on both the bias voltage and temperature. By adjusting the bias voltage over the operational range of the device, it is possible to adjust to the gain of the SiPM to compensate for temperature variations. A functional diagram of the temperature compensation and amplification circuit is shown in figure 2. Local logic uses the output of a thermistor mounted next to the SiPM to provide a DC offset to the bias that corrects the gain of the SiPM for temperature.

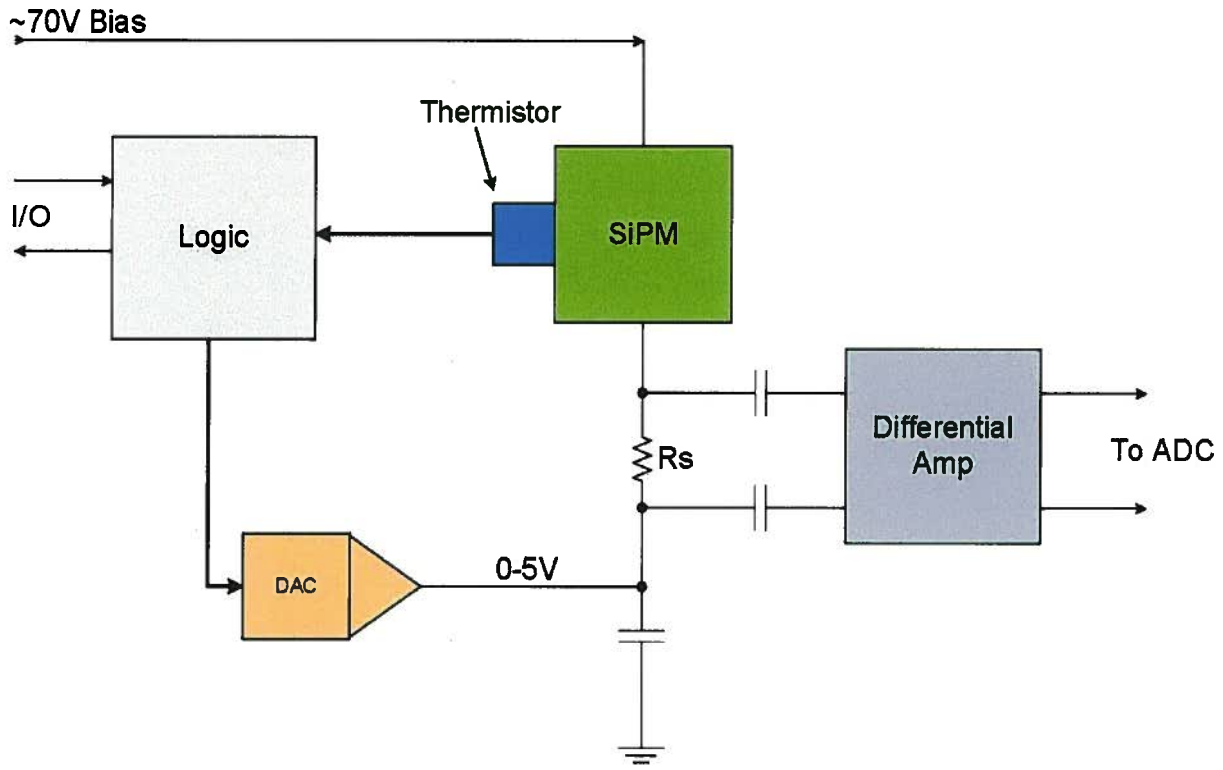

Figure 2: Block diagram of the SiPM temperature compensation circuit for the sPHENIX EMCal and HCal detectors.

The Front End Electronics (FEE) consists of 3 modules, the sensor/preamp board, the preamp interface board, and the controller board, are shown in figure 3. The SiPM, preamp and thermistor are located on a small board that is mounted on the HCal module with the light fibers from a single tower attached to it. The preamp interface board multiplexes the analog signals from 16 SiPMs onto a common data cable, and provides low voltage, bias and control signals to the sensor/preamp board. The controller board provides the temperature compensation for the SiPMs. A local CPU uses the thermistor inputs to bias adjustment for each SiPM channel. Overall gain for each SiPM can be adjusted by changing the DC offset of the bias by a fixed value. The parameters required for thermal compensation are downloaded from a local PC via a RS-485 serial interface. The circuit design for both the EMCal and the HCal is the same, however, due to differences in the topology of the fibers for the 2 detectors, the packaging of the electronics will be customized for each detector.

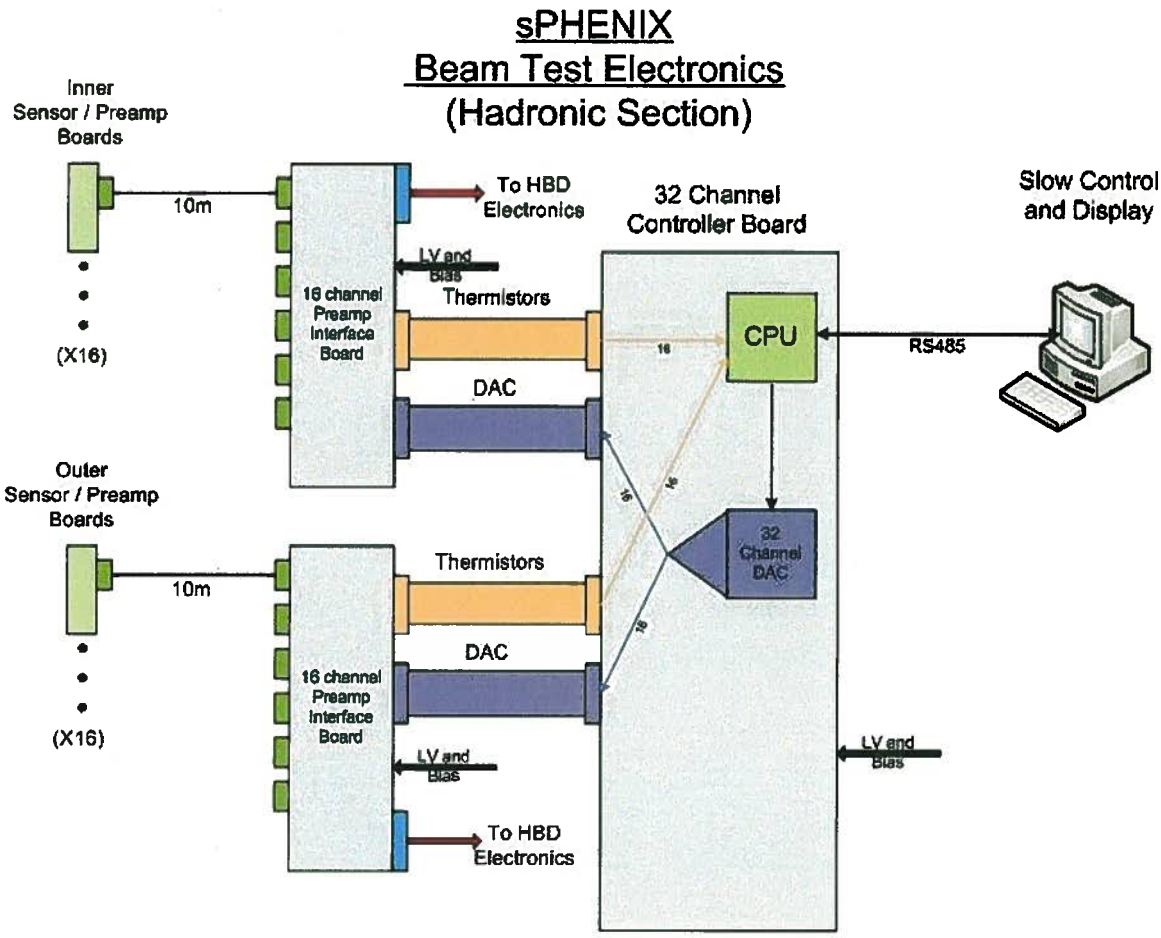

Figure 3: Front End Electronics (FEE) for the HCal. The EMCal electronics circuit design is the same, however, the layout topology is different to accommodate the difference in the topology of the fibers for the detector.

The analog signals are digitized and buffered by a front-end digitization system that was originally designed and used by the PHENIX HBD detector. The digitized events are readout using a PHENIX style DAQ system consisting of a timing module, trigger module, data collection modules and Linux based data computer. A block diagram of the HBD readout system is shown in figure 4. Readout of the detectors will require 2 ADC boards. The readout system will require a total of 2 crates of PHENIX electronics in the control room, along with Linux based computers for control and data logging.

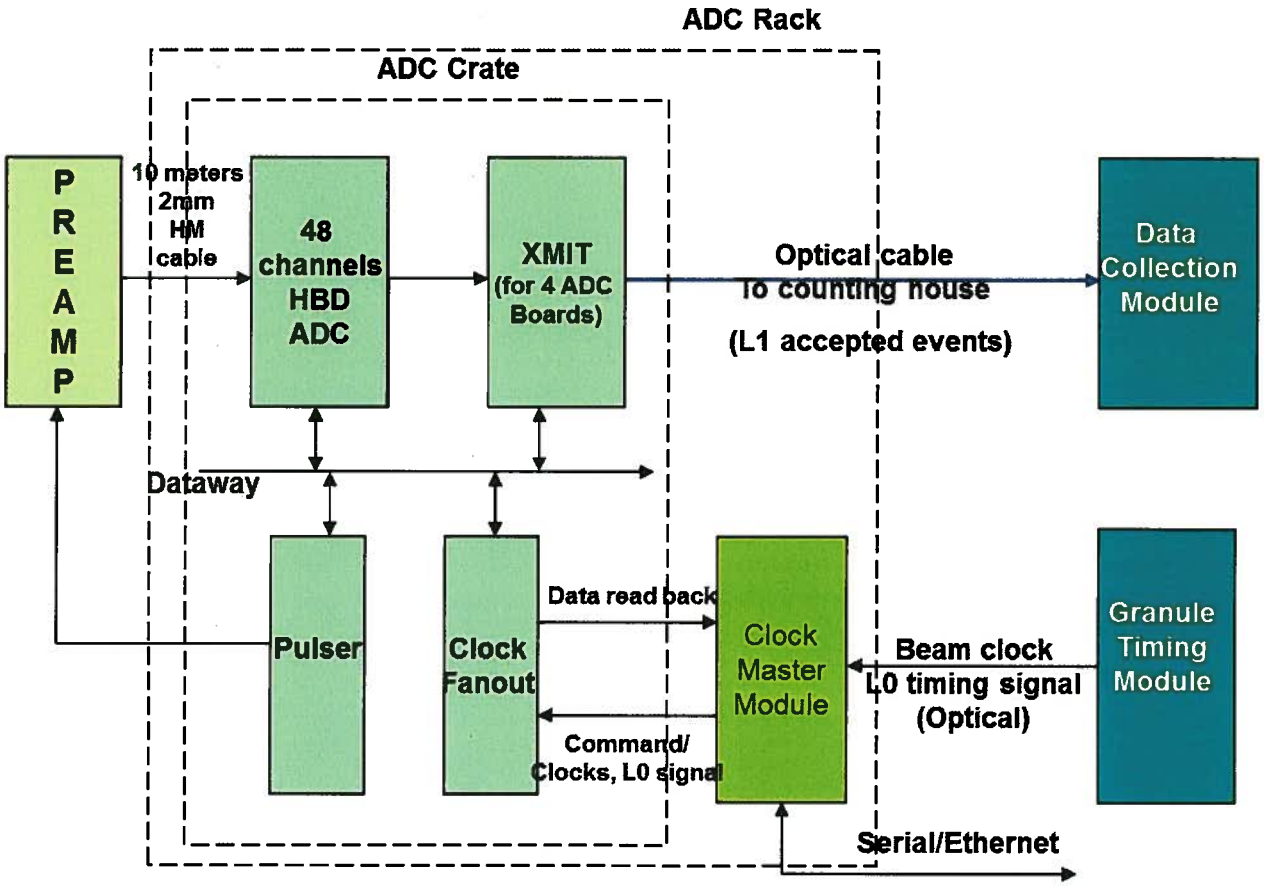

Figure 4: Block diagram of the HBD electronics that will be used for the HCal and EMCal readout.

All electronics are custom designed and built following industry standards. All power systems are fused appropriately and safety grounded. Design schematics for all custom electronics, and data sheets for commercial electronics will be provided in advance of safety review.

The experimenters do not anticipate any requests of equipment from the PREP pool. However, should unanticipated needs arise (e.g. failed NIM module) limited access to the PREP pool may be required.

The experimenters plan to have most of their devices on a private network with one machine acting as gateway between the internal network and external network. A similar setup was used for the T-1038 PHENIX MPC-Ex effort.

2.3.3 EMCal Calibration System

A solid-state laser will be used to calibrate the EMCal periodically during data taking. The laser head, mounted in a fully enclosed box, and the control unit will be located the detector. An optical fiber will be connected directly to laser head and transmit the laser pulses to the EMCal detector. At the EMCal, an optical splitter will split the light into 49 fibers which will be directly coupled to the optical cavities on the back side of the EMCal.

The laser is a Picosecond Diode Laser from Advanced Laser Diode Systems, class 3B model PiL040X, producing 420 nm laser pulses, 50 ps wide at frequencies up to 1Mhz. The optical power output, P_o, is 1mW with a peak power output, P_p, of 1000 mW.

2.3.4 Description of Tests

The EMCal and HCal modules will be assembled and tested at Brookhaven National Laboratory in the second half of 2013. During the first 2 weeks of January 2014 the detectors will be transported to FNAL. Once they arrive, final assembly of the detectors and cosmic ray running on the floor area outside MT6.2 beam line area will take place. During the week of Jan 29, if possible, the detectors will be relocated into the MT6.2 test area parasitic to T-1042 operations.

The week of Feb 5, 2014 will be used for final installation and commissioning of the HCal and EMCal detectors, electronics and the MWPC tracking system. During this period limited beam requirements are anticipated for short periods with beam use increasing as the detectors and electronics are commissioned.

During the period of Feb 12-25 the experiment plans on taking fixed length runs at energies ranging from 1-60 GeV for pions in 5 GeV steps and electrons from 0.5 GeV to 16 GeV.. Following each energy scan, a control access is required to change the orientation of the detectors with respect to the nominal beam. Data taking at 10 geometrical orientations, and 6 different energy settings per orientation, are required. Each data set is expected to require 2 hours of beam time, requiring a total of 120 hours of beam time. Assuming 12 hours of beam operations per day, 2 weeks (14 days) of beam operations is sufficient to fulfill our beam requirements.

Data analysis will commence with data taking and continue following the test beam operations. Based on the results of the analysis additional beam time may be requested.

2.4 Schedule

The basic run plan is as follows:

1. Jan 1-14, 2014: Shipment of HCal and EMCal detectors and associated electronics to FNAL.

2. Jan 14-28 2014: Final assembly of the HCal and EMCal detectors, commissioning of electronics and cosmic ray running outside of the M-Test beam line area

3. Jan 29-Feb 4 2014: Move EMCal and HCal detectors to MT6.2 area parasitic to T1042 operations if possible.

4. Feb 5-11 2014: Final commissioning of detectors and electronics, incorporation of tracking system into sPHENIX DAQ system.

5. Feb 12-25 2014: Test beam operations using secondary pion and muon beams. During this time we anticipate doing beam energy scans and geometric scans. Duration of the energy scans will depend on the event rates. Geometric scans will require short

controlled access to change the geometrical orientation of the detectors with respect to the beam line.

6. March 2014: Analysis of test data
7. April 2014: Based on analysis of data taken in February, one week of additional test beam access may be requested. If no additional beam time is required, the experimenters will disassemble the detectors and transport them back to BNL.

VI. RESPONSIBILITIES BY INSTITUTION – NON FERMILAB

- BROOKHAVEN NATIONAL LABORATORY:
  - HCal and EMCal detectors: $100K
  - Readout and DAQ electronics: $10K
  - Lift table for HCal and EMCal detectors.
  - Installation and commissioning of detectors
  - Staffing of data taking shifts
  - Data analysis
- Georgia State University
  - Installation and commissioning of detectors
  - Staffing of data taking shifts
  - Data analysis
- Oak Ridge National Laboratory
  - Installation and commissioning of detectors
  - Electronics Support
  - Staffing of data taking shifts
  - Data analysis
- University of Colorado
  - Installation and commissioning of detectors
  - Staffing of data taking shifts
  - Data analysis

IV. RESPONSIBILITIES BY INSTITUTION – FERMILAB

4.1 FERMILAB ACCELERATOR DIVISION:

4.1.1 Use of MTest beam line as outlined in Section II. [0.25 FTE/week]

4.1.2 Maintenance of all existing standard beam line elements (SWICs, loss monitors, etc) instrumentation, controls, clock distribution, and power supplies.

4.1.3 Scalars and beam counter readouts will be made available via ACNET in the MTest control room.

4.1.4 Reasonable access to the equipment in the MTest beam line.

4.1.5 Connection to beams console and remote logging (ACNET) should be made available.

4.1.6 The test beam energy and beam line elements will be under the control of the AD Operations Department Main Control Room (MCR). [0.25 FTE/week]

4.1.7 Position and focus of the beam on the experimental devices under test will be under control of MCR. Control of secondary devices that provide these functions may be delegated to the experimenters as long as it does not violate the Shielding Assessment or provide potential for significant equipment damage.

4.1.8 The integrated effect of running this and other SY120 beams will not reduce the neutrino flux by more than an amount set by the office of Program Planning, with the details of scheduling to be worked out between the experimenters and the Office of Program Planning.

4.2 FERMILAB PARTICLE PHYSICS DIVISION:

4.2.1 The test-beam efforts in this TSW will make use of the Fermilab Test Beam Facility. Requirements for the beam and user facilities are given in Section II. The Fermilab Particle Physics Division will be responsible for coordinating overall activities in the MTest beam-line, including use of the user beam-line controls, readout of the beam-line detectors, and FTBF computers. [6.5 FTE/week]

4.2.2 Setting up and maintaining of the MWPC tracking system (4 stations), and differential Cherenkov.

4.2.3 Use of a pb-glass block and phototube for cross calibration of EMCal energy response.

4.2.4 Two scintillator trigger counters (including PMT's). Scintillator should measure approximately 1x1 in^2.

4.2.5 Crane support to move detectors into and out of beam enclosure.

4.2.6 Conduct a NEPA review of the experiment.

4.2.7 Provide day-to-day ESH&Q support/oversight/review of work and documents as necessary.

4.2.8 Provide safety training as necessary, with assistance from the ESH&Q Section.

4.2.9 Update/create ITNA's for users on the experiment.

4.2.10 Initiate the ESH&Q Operational Readiness Clearance Review and any other required safety reviews.

4.2.11 Installation of 220v 3-phase outlets [$2k]

4.3 FERMILAB SCIENTIFIC COMPUTING DIVISION

4.3.1 Internet access should be continuously available in the MTest control room.
4.3.2 See Appendix II for summary of PREP equipment pool needs.
4.3.3 Set-up of a private network, and connection to Fermi-network [0 FTE]

4.4 FERMILAB ESH&Q SECTION

4.4.1 Assistance with safety reviews.
4.4.2 Provide safety training, with assistance from PPD, as necessary for experimenters. [0.2 FTE]

SUMMARY OF COSTS

Source of Funds [$K]	**Materials & Services** ($k)	**Labor** (FTE/week)
Accelerator Division	0	0.5
Particle Physics Division	2	6.5
Scientific Computing Division	0	0
ESH&Q Section	0	0.2
Totals Fermilab	$2.0K	7.2
Totals Non-Fermilab		

I. GENERAL CONSIDERATIONS

6.1 The responsibilities of the Spokesperson and the procedures to be followed by experimenters are found in the Fermilab publication "Procedures for Researchers": (http://www.fnal.gov/directorate/PFX/PFX.pdf). The Spokesperson agrees to those responsibilities and to ensure that the experimenters all follow the described procedures.

6.2 To carry out the experiment a number of Environmental, Safety and Health (ESH&Q) reviews are necessary. This includes creating an Operational Readiness Clearance document in conjunction with the standing Particle Physics Division committee. The Spokesperson will follow those procedures in a timely manner, as well as any other requirements put forth by the Division's Safety Officer.

6.3 The Spokesperson will ensure at least one person is present at the Fermilab Test Beam Facility whenever beam is delivered and that this person is knowledgeable about the experiment's hazards.

6.4 All regulations concerning radioactive sources will be followed. No radioactive sources will be carried onto the site or moved without the approval of the Fermilab ESH&Q section.

6.5 All items in the Fermilab Policy on Computing will be followed by the experimenters. (http://computing.fnal.gov/cd/policy/cpolicy.pdf).

6.6 The Spokesperson will undertake to ensure that no PREP or computing equipment be transferred from the experiment to another use except with the approval of and through the mechanism provided by the Scientific Computing Division management. The Spokesperson also undertakes to ensure no modifications of PREP equipment take place without the knowledge and written consent of the Computing Sector management.

6.7 The experimenters will be responsible for maintaining both the electronics and the computing hardware supplied by them for the experiment. Fermilab will be responsible for repair and maintenance of the Fermilab-supplied electronics. Any items for which the experiment requests that Fermilab performs maintenance and repair should appear explicitly in this agreement.

At the completion of the experiment:

6.8 The Spokesperson is responsible for the return of all PREP equipment, computing equipment and non-PREP data acquisition electronics. If the return is not completed after a period of one year after the end of running the Spokesperson will be required to furnish, in writing, an explanation for any non-return.

6.9 The experimenters agree to remove their experimental equipment as the Laboratory requests them to. They agree to remove it expeditiously and in compliance with all ESH&Q requirements, including those related to transportation. All the expenses and personnel for the removal will be borne by the experimenters unless removal requires facilities and personnel not able to be supplied by them, such rigging, crane operation, etc.

6.10 The experimenters will assist Fermilab with the disposition of any articles left in the offices they occupied.

6.11 An experimenter will be available to report on the test beam effort at a Fermilab All Experimenters' Meeting.

SIGNATURES:

The spokesperson is the official contact and is responsible for forwarding all pertinent information to the rest of the group, arranging for their training, and requesting ORC or any other necessary approvals for the experiment to run.
The spokesperson should also make sure the appropriate people (which might be everyone on the experiment) sign up for the test beam emailing list.

Eric J. Mannel, Experiment Spokesperson 1 / 6 / 2014

APPENDIX I: MT6 AREA LAYOUT

The TOF system requires 2 locations with sufficient separation to measure the difference in the time-of-flight for the beam particles. For the forward detector the experimenters request use of the motion table that is installed in the forward region of MT6.2 area. For the rear detector the experimenters request a location just down stream of the climate controlled area. For the EMCal and HCal the experimenters want to the use the most downstream region of the MT6.2 test area on the concrete blocks that are located there. The most likely method of getting the EMCal and HCal detector system into the MT6.2 test area is through the hatch directly above this area.

MTEST AREAS

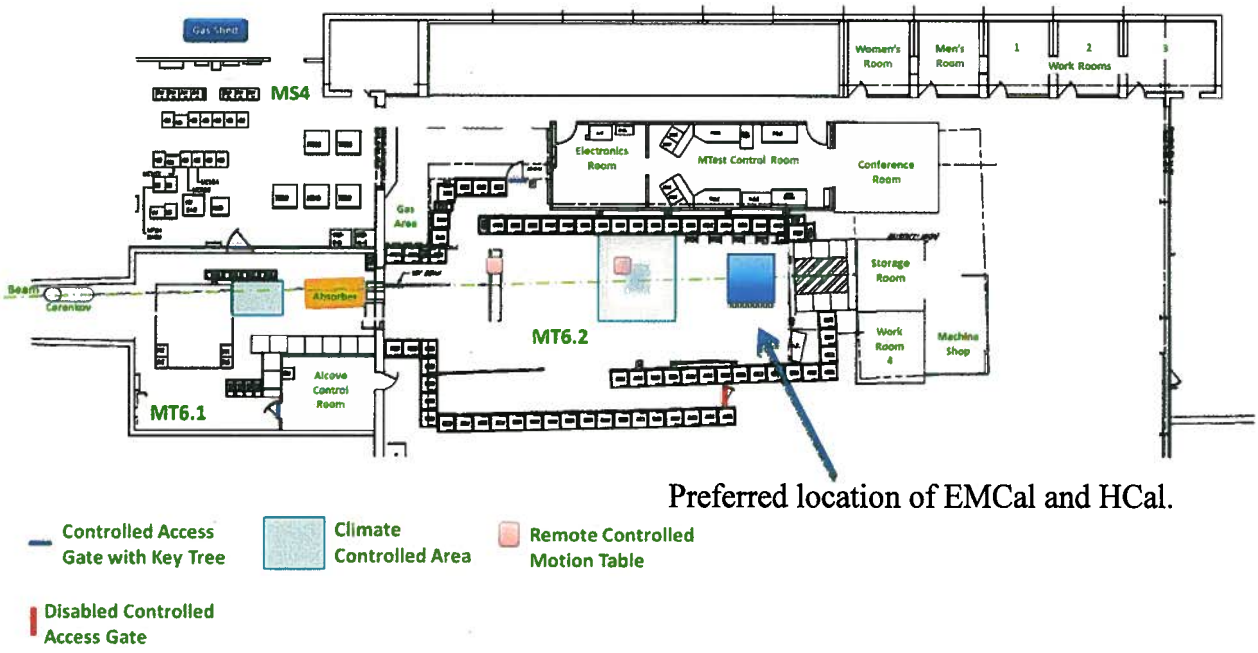

APPENDIX II: EQUIPMENT NEEDS

Provided by experimenters:

1. HCal with all associated readout electronics.
2. EMCal with all associated readout electronics.
3. TOF Detectors and associated readout electronics
4. Data acquisition electronics and computers
5. Power supplies for all electronics
6. Signal and power cables for all HCal and EMCal electronics

Equipment Pool and PPD items needed for Fermilab test beam, on the first day of setup.

PREP EQUIPMENT POOL:

Description

The experimenters may require a few NIM logic and discriminator modules for triggering. A detailed request will be provided in advance of beam operations.

PPD FTBF:

Description

Use of the MWPC tracking system (4 stations) and associated electronics.

Use of a pb-glass block and phototube for cross calibration of EMCal energy response.

Two scintillator trigger counters (including PMT's). Scintillator should measure approximately 1x1 in^2.

HV to operate PMTs for Pb-Glass and Trigger counter PMTs.

Use of MTEST Cerenkov counter for electron ID up to 8 GeV

APPENDIX III: - HAZARD IDENTIFICATION CHECKLIST

Items for which there is anticipated need have been checked. See next page for detailed descriptions of categories.

Flammable Gases or Liquids		**Other Gas Emissions**		**Hazardous Chemicals**		**Other Hazardous /Toxic Materials**
Type:		Type:			Cyanide plating materials	List hazardous/toxic materials planned for use in a beam line or an experimental enclosure:
Flow rate:		Flow rate:			Hydrofluoric Acid	
Capacity:		Capacity:			Methane	
Radioactive Sources		**Target Materials**			Photographic developers	
	Permanent Installation		Beryllium (Be)		PolyChlorinatedBiphenyls	
	Temporary Use		Lithium (Li)		Scintillation Oil	
Type:			Mercury (Hg)		TEA	
Strength:			Lead (Pb)		TMAE	
Lasers			Tungsten (W)		Other: Activated Water?	
	Permanent installation		Uranium (U)			
X	Temporary installation		Other:	**Nuclear Materials**		
X	Calibration	**Electrical Equipment**		Name:		
	Alignment		Cryo/Electrical devices	Weight:		
Type:	420 nm diode laser		Capacitor Banks	**Mechanical Structures**		
Wattage:	Po= 1 mW/ P_f= 1000mW	X	High Voltage (50V)		Lifting Devices	
MFR Class:	3B		Exposed Equipment over 50 V	X	Motion Controllers	
		X	Non-commercial/Non-PREP		Scaffolding/ Elevated Platforms	
			Modified Commercial/PREP		Other:	
Vacuum Vessels		**Pressure Vessels**		**Cryogenics**		
Inside Diameter:		Inside Diameter:			Beam line magnets	
Operating Pressure:		Operating Pressure:			Analysis magnets	
Window Material:		Window Material:			Target	
Window Thickness:		Window Thickness:			Bubble chamber	

TSW for T-1044: **sPHENIX Calorimetry Tests**

The following people have read this TSW:

_____ 1 / 8 / 2014
Michael Lindgren, Particle Physics Division, Fermilab

_____ 1/10/2014
Sergei Nagaitsev, Accelerator Division, Fermilab

_____ 1 / 9 / 2014
Robert Roser, Scientific Computing Division, Fermilab

_____ 1 / 13 / 2014
Martha Michels, ESH&Q Section, Fermilab

_____ 1 / 14 /2014
Greg Bock, Associate Director for Research, Fermilab

_____ 1 / 14 /2014
Stuart Henderson, Associate Director for Accelerators, Fermilab