Fermilab

Directorate

TECHNICAL SCOPE OF WORK
FOR THE 2013 FERMILAB TEST BEAM FACILITY PROGRAM

T-1043

Measurements of Photoelectron Yields for Prototype Mu2e Cosmic Ray Veto Scintillation Counters

August 28, 2013

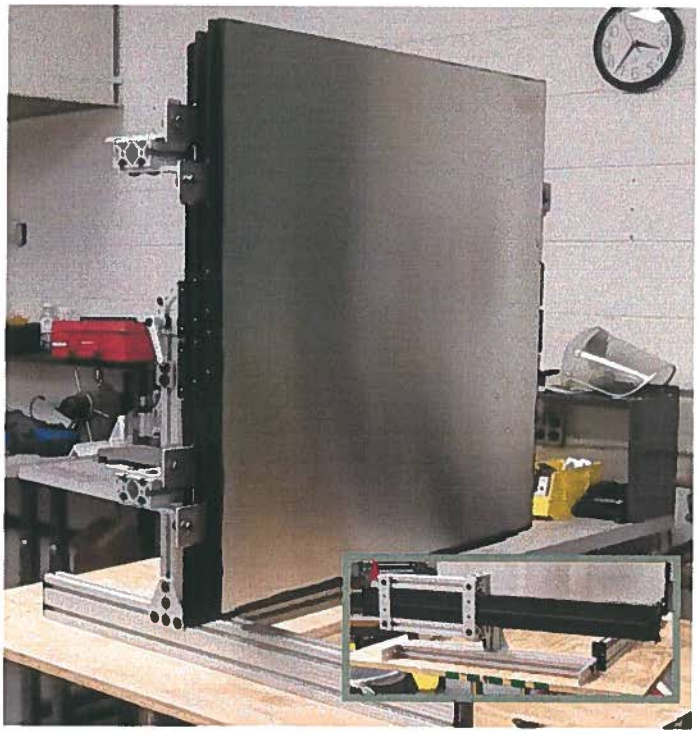

TABLE OF CONTENTS

	INTRODUCTION		3
I.	PERSONNEL AND INSTITUTIONS		5
II.	EXPERIMENTAL AREA, BEAMS AND SCHEDULE CONSIDERATIONS		6
III.	RESPONSIBILITIES BY INSTITUTION – NON FERMILAB		11
IV.	RESPONSIBILITIES BY INSTITUTION – FERMILAB		12
	4.1 FERMILAB ACCELERATOR DIVISION	12	
	4.2 FERMILAB PARTICLE PHYSICS DIVISION	12	
	4.3 FERMILAB COMPUTING SECTOR	12	
	4.4 FERMILAB ESH&Q SECTION	12	
	4.5 FERMILAB COLLABORATORS	13	
V.	SUMMARY OF COSTS		14
VI.	GENERAL CONSIDERATIONS		15
	SIGNATURES		16
	APPENDIX I – MT6 AREA LAYOUT		17
	APPENDIX II – EQUIPMENT NEEDS		18
	APPENDIX III – HAZARD IDENTIFICATION CHECKLIST		19

INTRODUCTION

This is a technical scope of work (TSW) between the Fermi National Accelerator Laboratory (Fermilab) and the experimenters of University of Virginia who have committed to participate in beam tests to be carried out during the 2013 Fermilab Test Beam Facility program.

The TSW is intended primarily for the purpose of recording expectations for budget estimates and work allocations for Fermilab, the funding agencies and the participating institutions. It reflects an arrangement that currently is satisfactory to the parties; however, it is recognized and anticipated that changing circumstances of the evolving research program will necessitate revisions. The parties agree to modify this scope of work to reflect such required adjustments. Actual contractual obligations will be set forth in separate documents.

This TSW fulfills Article 1 (facilities and scope of work) of the User Agreements signed (or still to be signed) by an authorized representative of each institution collaborating on this experiment.

Description of Detector and Tests:

The devices under test are two prototype scintillation counters for the Mu2e cosmic ray veto (CRV) system. The counters are made from extruded plastic scintillator with dimensions 2 cm x 8 cm x 80 cm, embedded with four wavelength-shifting fibers running along the length of the counter (Figure 1). The fibers are read out at both ends by silicon photomultipliers (SiPMs). An additional device to be tested is a prototype CRV module, which consists of 24 counters arranged in a three-layer configuration (Figure 2). The approximate dimensions of the module are 7 cm thick, 69 cm wide, and 80 cm long.

The goal of the counter tests is to map out the photoelectron yield for the counters, such that appropriate triggering thresholds can be set to achieve the required inefficiency of 10^{-4}. The two counters are of slightly different design: in one counter the fibers are glued in place and in the other they are free. These counters can be instrumented with either surface-mount or canned SiPMs, giving 2 x 2 = 4 design variations to be evaluated.

Special attention must be paid to detailing non-uniform regions of the counter such as the grooves for the embedded fibers and edges/corners. These are mm-scale areas, so tracking of the incident beam particles to 1 mm is required for the test. The FTBF "Fenker" MWPCs will be used for this purpose. A motion table will be used to target the different regions of the detector and the effect of different particle incidence angles will also be investigated.

The goal of the module test is to investigate the effect of different gap sizes between adjacent counters on photoelectron yield. Gaps of 2 mm and 4 mm will be incorporated into the module and the photoelectron yield will be measured with the beam incident on the gaps at several incidence angles.

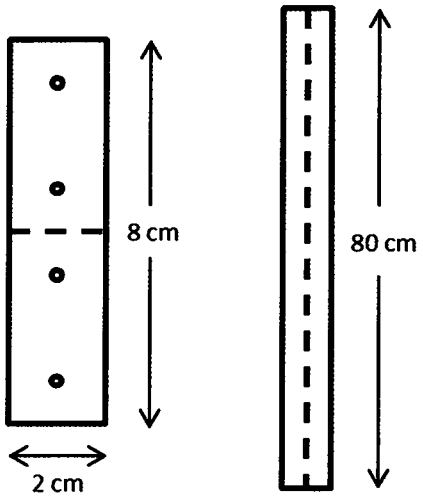

Figure 1: Counter end view (left) and top view (right)

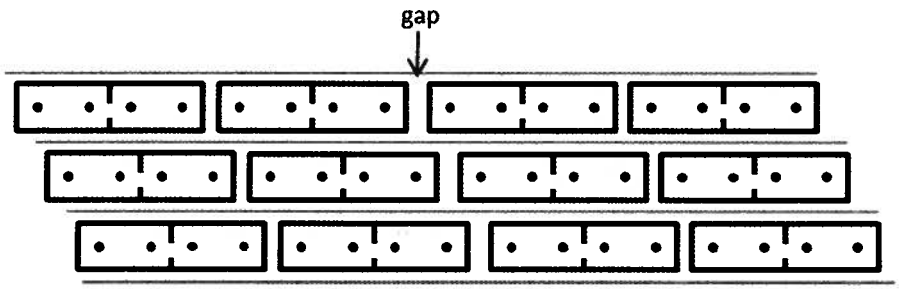

Figure 2: End view of one half of a module. The layers are separated by a ¼" thick sheet of aluminum

PERSONNEL AND INSTITUTIONS:

Spokesperson: Craig Dukes, University of Virginia

Lead Experimenter in charge of beam tests: Andy Hocker, FNAL

Fermilab liaison: Aria Soha

The group members at present are: *(Please use full names)*

	Institution	Country	Collaborator	Rank/Position	Other Commitments
1.1	University of Virginia	USA	Craig Dukes	Professor	Mu2e, NOvA
			Craig Group	Asst. Professor	CDF, Mu2e, NOvA
			Yuriy Oksuzian	Postdoc	CDF, Mu2e
			Martin Frank	Postdoc	Mu2e
			Ralf Ehrlich	Postdoc	Mu2e
1.2	FNAL	USA	Andy Hocker	Scientist I	Mu2e, SRF
			Paul Rubinov	Sr. Eng. Physicist	Mu2e
			Doug Glenzinski	Scientist II	Mu2e
			Sten Hansen	Engineer IV	Mu2e
			Julie Whitmore	Scientist II	Mu2e, CMS

II. EXPERIMENTAL AREA, BEAMS AND SCHEDULE CONSIDERATIONS:

2.1 LOCATION

2.1.1 The beam tests will take place in MT6.2B

2.2 BEAM

2.2.1 BEAM TYPES AND INTENSITIES

Energy of beam: 120 GeV
Particles: protons
Intensity: 1k – 10k in units of particles/ 4 sec spill
Beam spot size: Nominal 6 mm spot is fine, larger spot sizes would be preferable

2.2.2 BEAM SHARING

The beam requirements for the experiment are not strict (all that is needed are MIPs) and the experiment itself does not present much material in the beam (counters: 4 cm of polystyrene, ~0.05λ_I, module: 6 cm polystyrene and 1" aluminum, ~0.14λ_I). In addition, most movements of the detector will be done remotely, so there are no major obstacles to sharing beam with another experiment.

2.3 EXPERIMENTAL CONDITIONS

2.3.1 AREA INFRASTRUCTURE

Each counter is approximately 2 cm x 8 cm x 80 cm in dimension, with a weight of approximately 2 kg. The module is approximately 7 cm x 69 cm x 80cm, with a weight of about 90 kg. The motion table "2B" will be required for the devices' mounting and remote maneuvering.

The FTBF MWPC system will be required for particle tracking, with one station upstream of the counters and one downstream. The MT6SC3 and MT6SC4 scintillator counter systems will be used to provide the beam coincidence trigger. The SiPM data will be brought out of the enclosure on Ethernet cables.

2.3.2 ELECTRONICS NEEDS

No PREP electronics are requested.

The SiPMs are optically and mechanically connected to the counters by way of a Counter Mother Board (CMB) mounted on each end of the counter. There are two different flavors of CMB, one for surface-mount SiPMs and one for canned, that can be easily exchanged for one

another on the counter. The CMB also houses a temperature sensor and LED flasher. The SiPMs are read out by a PADE board shown schematically in Figure 3. A small adapter board interfaces the SiPMs from the CMB to HDMI connectors on the PADE board. Additional inputs to the PADE board are the beam trigger signal and a begin-spill signal from FTBF. The PADE board buffers the data during the spill in on-board DDR2 DRAM and then, between spills, makes the data available over a Gigabit Ethernet interface.

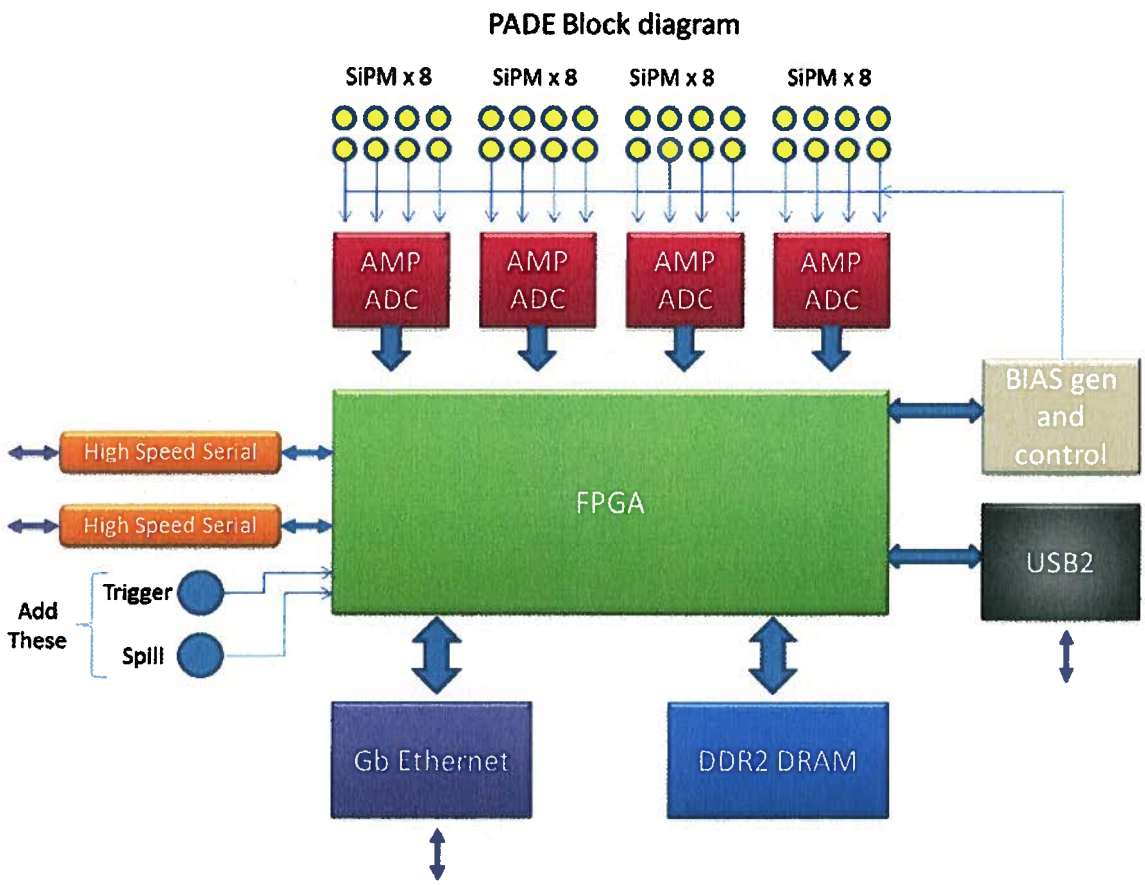

Figure 3: PADE readout board schematic

The trigger and begin-spill signals will be shared with the MWPC TDC controller board. This will allow SiPM and MWPC TDC data to be correlated offline via matching of sequential trigger numbers and/or trigger timestamps, in lieu of a dedicated hardware interface between the TDC and PADE systems.

2.3.3 Description of Tests

The first step is to target the counters with the beam at 90 degrees incidence (Figure 4) in order to scan the SiPM bias voltages and find their operational points.

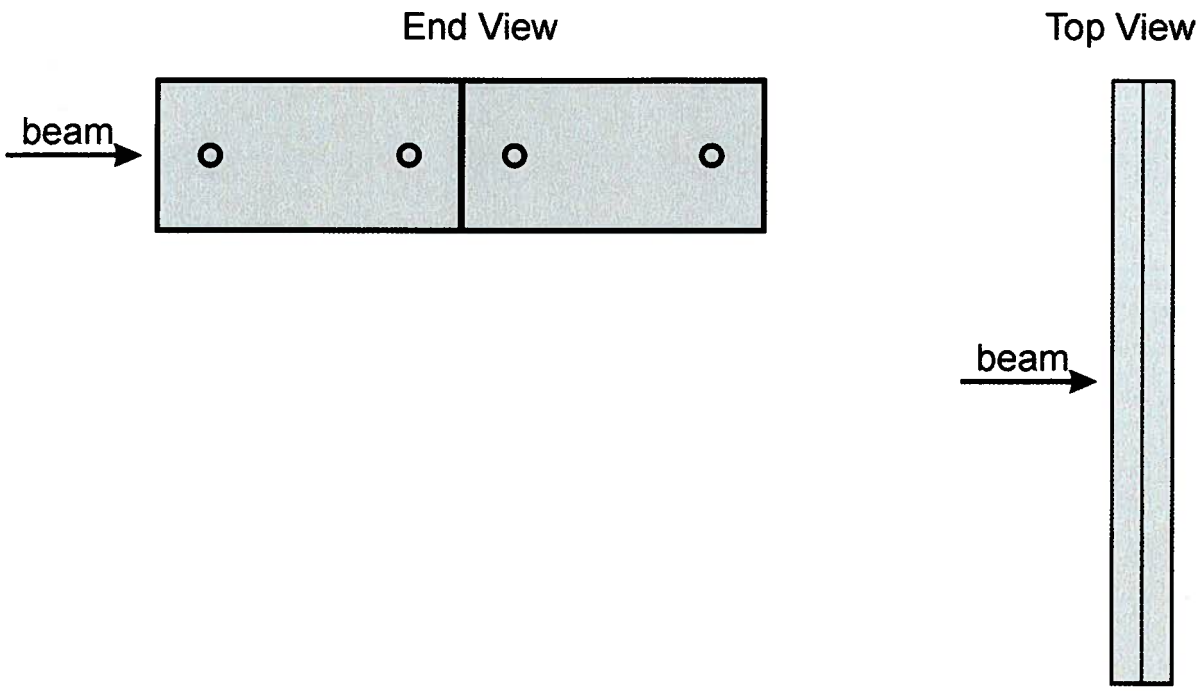

Figure 4: Bias scan configuration

The bulk of the experiment will be devoted to lateral scans across the face of the counters to measure photoelectron yields. Figure 5 shows the target locations. A total of 20 locations per counter will be targeted; the two counters will be placed one behind the other to allow for simultaneous data collection.

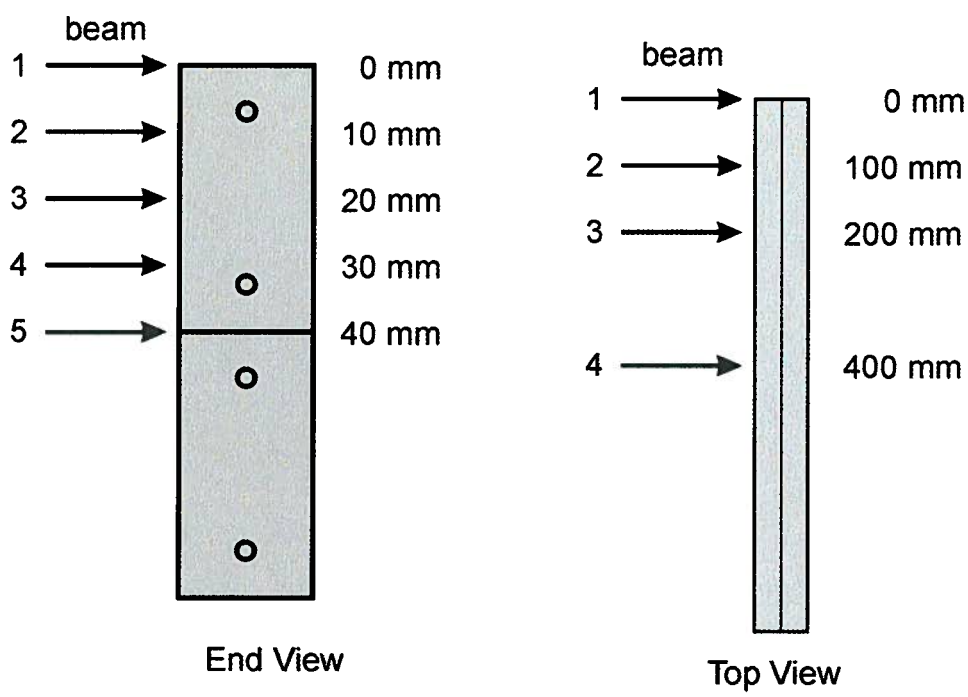

Figure 5: Location of targets for lateral counter scans

The counters will also be used to study incidence angles other than 0 degrees. Five lateral scan points at the middle of the counters will be targeted for angles of 15, 30, and 60 degrees (Figure 6):

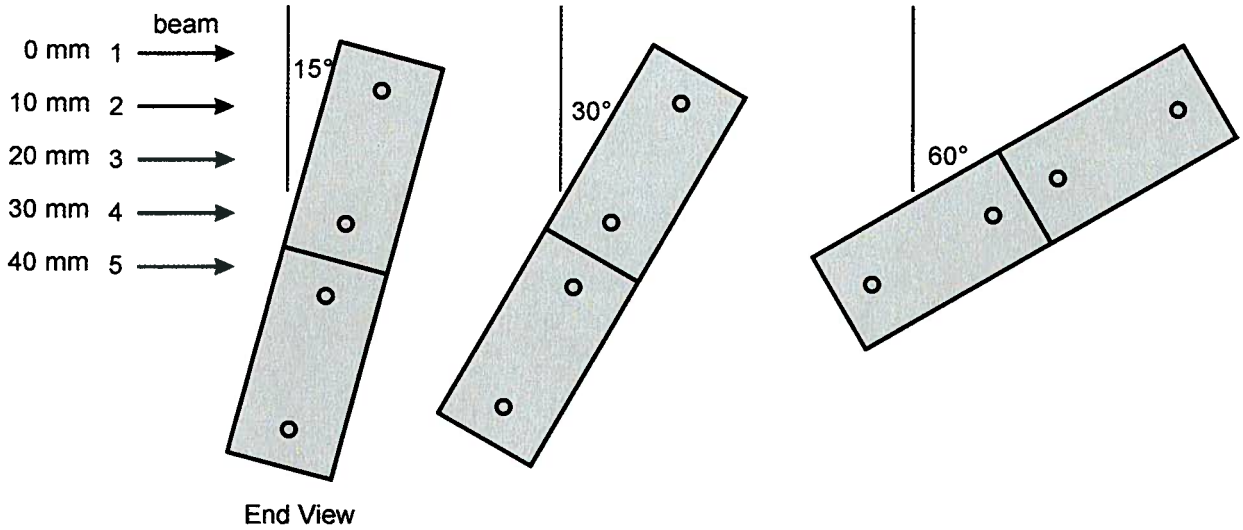

Figure 6: Location of targets for lateral scans at different angles.

The module test would target the two differently-sized gaps in the module at incidence angles of 0, 15, and 30 degrees (Figure 7). If time permits, points 10 mm above and below the gaps would also be targeted.

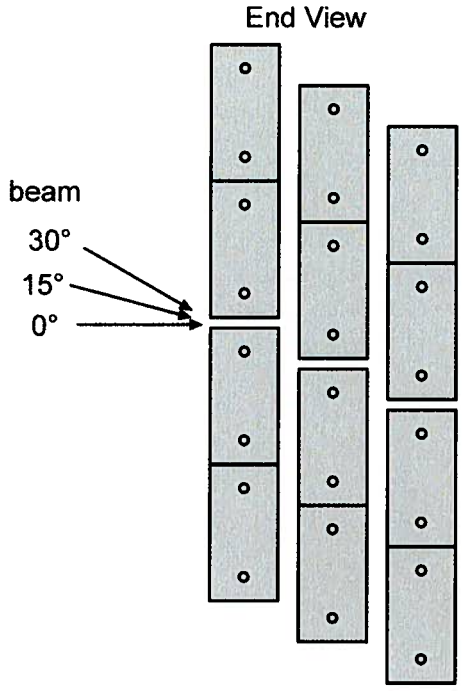

Figure 7: Configuration for module test. One-fourth of the module is shown. Sections of the module not shown have differently-sized gaps between counters.

A typical 12-hour shift would acquire data at approximately 10 different spots on the counters, integrating about 60k events per spot assuming an average rate of 1k/spill. When investigating different incidence angles, an access would need to be made once per shift to reposition the counters/module.

2.4 SCHEDULE

The above run plan should be sufficient to characterize the counters/module with a week's worth of beam time, assuming only one shift per day. However a total of two weeks is requested for operational contingency and to accumulate more statistics at particular spots if initial analyses of the data indicate this is necessary. The experiment is expected to be complete at the end of the two weeks; however follow-on testing may occur until the Mu2e experiment begins operations.

III. RESPONSIBILITIES BY INSTITUTION – NON FERMILAB

3.1 UNIVERSITY OF VIRGINIA:

- Fully instrumented counters and module

[$6000]

- Adapters from CMB to PADE board

[$3000]

IV. RESPONSIBILITIES BY INSTITUTION – FERMILAB

4.1 FERMILAB ACCELERATOR DIVISION:

4.1.1 Use of MTest beamline as outlined in Section II.
4.1.2 Maintenance of all existing standard beam line elements (SWICs, loss monitors, etc) instrumentation, controls, clock distribution, and power supplies.
4.1.3 Scalers and beam counter readouts will be made available via ACNET in the MTest control room.
4.1.4 Reasonable access to the equipment in the MTest beamline.
4.1.5 Connection to beams console and remote logging (ACNET) should be made available.
4.1.6 The test beam energy and beam line elements will be under the control of the AD Operations Department Main Control Room (MCR). [1.0 person-weeks]
4.1.7 Position and focus of the beam on the experimental devices under test will be under control of MCR. Control of secondary devices that provide these functions may be delegated to the experimenters as long as it does not violate the Shielding Assessment or provide potential for significant equipment damage.
4.1.8 The integrated effect of running this and other SY120 beams will not reduce the neutrino flux by more than an amount set by the office of Program Planning, with the details of scheduling to be worked out between the experimenters and the Office of Program Planning.

4.2 FERMILAB PARTICLE PHYSICS DIVISION:

4.2.1 The test-beam efforts in this TSW will make use of the Fermilab Test Beam Facility. Requirements for the beam and user facilities are given in Section II. The Fermilab Particle Physics Division will be responsible for coordinating overall activities in the MTest beam-line, including use of the user beam-line controls, readout of the beam-line detectors, and FTBF computers. [2.0 person weeks]
4.2.2 Set up and maintenance of 2 MWPC tracking stations. [2.0 person-weeks]
4.2.3 Use of the 2B Motion Table
4.2.4 Conduct a NEPA review of the experiment.
4.2.5 Provide day-to-day ESH&Q support/oversight/review of work and documents as necessary.
4.2.6 Provide safety training as necessary, with assistance from the ESH&Q Section.
4.2.7 Update/create ITNA's for users on the experiment.
4.2.8 Initiate the ESH&Q Operational Readiness Clearance Review and any other required safety reviews. [0.2 person-weeks]

4.3 FERMILAB SCIENTIFIC COMPUTING DIVISION

4.3.1 Internet access should be continuously available in the MTest control room.

4.4 FERMILAB ESH&Q SECTION

4.4.1 Assistance with safety reviews.

4.4.2 Provide safety training, with assistance from PPD, as necessary for experimenters. [0.2 person weeks]

4.5 FERMILAB COLLABORATORS

4.5.1 SiPM readout system (Two PADE boards)

SUMMARY OF COSTS

Source of Funds [$K]	Materials & Services	Labor (person-weeks)
Particle Physics Division	0.0	4.2
Accelerator Division	0	1
Scientific Computing Division	0	0
ESH&Q Section	0	0.2
Totals Fermilab	$0.0K	5.2
Totals Non-Fermilab	$9K	8

VI. GENERAL CONSIDERATIONS

6.1 The responsibilities of the Spokesperson and the procedures to be followed by experimenters are found in the Fermilab publication "Procedures for Researchers": (http://www.fnal.gov/directorate/PFX/PFX.pdf). The Spokesperson agrees to those responsibilities and to ensure that the experimenters all follow the described procedures.

6.2 To carry out the experiment a number of Environmental, Safety and Health (ESH&Q) reviews are necessary. This includes creating an Operational Readiness Clearance document in conjunction with the standing Particle Physics Division committee. The Spokesperson will follow those procedures in a timely manner, as well as any other requirements put forth by the Division's Safety Officer.

6.3 The Spokesperson will ensure at least one person is present at the Fermilab Test Beam Facility whenever beam is delivered and that this person is knowledgeable about the experiment's hazards.

6.4 All regulations concerning radioactive sources will be followed. No radioactive sources will be carried onto the site or moved without the approval of the Fermilab ESH&Q section.

6.5 All items in the Fermilab Policy on Computing will be followed by the experimenters. (http://computing.fnal.gov/cd/policy/cpolicy.pdf).

6.6 The Spokesperson will undertake to ensure that no PREP or computing equipment be transferred from the experiment to another use except with the approval of and through the mechanism provided by the Scientific Computing Division management. The Spokesperson also undertakes to ensure no modifications of PREP equipment take place without the knowledge and written consent of the Computing Sector management.

6.7 The experimenters will be responsible for maintaining both the electronics and the computing hardware supplied by them for the experiment. Fermilab will be responsible for repair and maintenance of the Fermilab-supplied electronics. Any items for which the experiment requests that Fermilab performs maintenance and repair should appear explicitly in this agreement.

At the completion of the experiment:

6.8 The Spokesperson is responsible for the return of all PREP equipment, computing equipment and non-PREP data acquisition electronics. If the return is not completed after a period of one year after the end of running the Spokesperson will be required to furnish, in writing, an explanation for any non-return.

6.9 The experimenters agree to remove their experimental equipment as the Laboratory requests them to. They agree to remove it expeditiously and in compliance with all ESH&Q requirements, including those related to transportation. All the expenses and personnel for the removal will be borne by the experimenters unless removal requires facilities and personnel not able to be supplied by them, such a rigging, crane operation, etc.

6.10 The experimenters will assist Fermilab with the disposition of any articles left in the offices they occupied.

6.11 An experimenter will be available to report on the test beam effort at a Fermilab All Experimenters' Meeting.

SIGNATURES:

Craig Dukes, Experiment Spokesperson 8/30/2013

APPENDIX I: MT6 AREA LAYOUT

The experiment would be well-suited for the MT6.2B area on the 2B motion table (Figure I.1)

MTEST AREAS

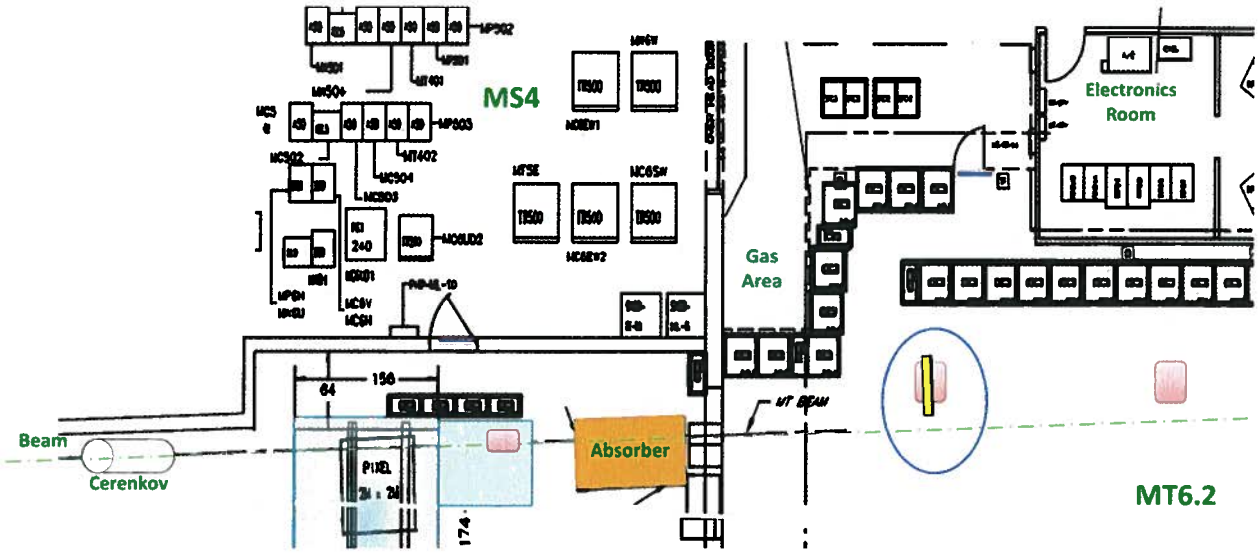

Figure I.1: MTest layout showing proposed location of experiment

APPENDIX II: EQUIPMENT NEEDS

Provided by experimenters:

UVA: counters and module

FNAL: SiPM readout system (PADE boards)

Equipment Pool and PPD items needed for Fermilab test beam, on the first day of setup.

PPD FTBF:

Quantity	Description
2	MWPC stations
2	Beam scintillator counters
1	Remotely Controlled Motion Table in 2B area

APPENDIX III: - HAZARD IDENTIFICATION CHECKLIST

Items for which there is anticipated need have been checked. See next page for detailed descriptions of categories. *(There is NO need to list existing Facility infrastructure)*

Flammable Gases or Liquids		**Other Gas Emissions**		**Hazardous Chemicals**		**Other Hazardous /Toxic Materials**
Type:		Type:			Cyanide plating materials	List hazardous/toxic materials planned for use in a beam line or an experimental enclosure:
Flow rate:		Flow rate:			Hydrofluoric Acid	
Capacity:		Capacity:			Methane	
Radioactive Sources		**Target Materials**			photographic developers	
	Permanent Installation		Beryllium (Be)		PolyChlorinatedBiphenyls	
	Temporary Use		Lithium (Li)		Scintillation Oil	
Type:			Mercury (Hg)		TEA	
Strength:			Lead (Pb)		TMAE	
Lasers			Tungsten (W)		Other: Activated Water?	
	Permanent installation		Uranium (U)			
	Temporary installation		Other:	**Nuclear Materials**		
	Calibration	**Electrical Equipment**		Name:		
	Alignment		Cryo/Electrical devices	Weight:		
Type:			Capacitor Banks	**Mechanical Structures**		
Wattage:		X	High Voltage (50V)		Lifting Devices	
MFR Class:			Exposed Equipment over 50 V		Motion Controllers	
		X	Non-commercial/Non-PREP		Scaffolding/ Elevated Platforms	
			Modified Commercial/PREP		Other:	
Vacuum Vessels		**Pressure Vessels**		**Cryogenics**		
Inside Diameter:		Inside Diameter:			Beam line magnets	
Operating Pressure:		Operating Pressure:			Analysis magnets	
Window Material:		Window Material:			Target	
Window Thickness:		Window Thickness:			Bubble chamber	

OTHER GAS EMISSION

Greenhouse Gasses (Need to be tracked and reported to DOE)

- ❑ Carbon Dioxide, including CO_2 mixes such as Ar/CO_2
- ❑ Methane
- ❑ Nitrous Oxide
- ❑ Sulfur Hexafluoride
- ❑ Hydro fluorocarbons
- ❑ Per fluorocarbons
- ❑ Nitrogen Trifluoride

NUCLEAR MATERIALS

Reportable Elements and Isotopes / Weight Units / Rounding

Name of Material	MT Code	Reporting Weight Unit Report to Nearest Whole Unit	Element Weight	Isotope Weight	Isotope Weight %
Depleted Uranium	10	Whole Kg	Total U	U-235	U-235
Enriched Uranium	20	Whole Gm	Total U	U-235	U-235
Plutonium-242[1]	40	Whole Gm	Total Pu	Pu-242	Pu-242
Americium-241[2]	44	Whole Gm	Total Am	Am-241	–
Americium-243[2]	45	Whole Gm	Total Am	Am-243	–
Curium	46	Whole Gm	Total Cm	Cm-246	–
Californium	48	Whole Microgram	–	Cf-252	–
Plutonium	50	Whole Gm	Total Pu	Pu-239+Pu-241	Pu-240
Enriched Lithium	60	Whole Kg	Total Li	Li-6	Li-6
Uranium-233	70	Whole Gm	Total U	U-233	U-232 (ppm)
Normal Uranium	81	Whole Kg	Total U	–	–
Neptunium-237	82	Whole Gm	Total Np	–	–
Plutonium-238[3]	83	Gm to tenth	Total Pu	Pu-238	Pu-238
Deuterium[4]	86	Kg to tenth	D_2O	D_2	
Tritium[5]	87	Gm to hundredth	Total H-3	–	–
Thorium	88	Whole Kg	Total Th	–	–
Uranium in Cascades[6]	89	Whole Gm	Total U	U-235	U-235

[1] Report as Pu-242 if the contained Pu-242 is 20 percent or greater of total plutonium by weight; otherwise, report as Pu 239-241.

[2] Americium and Neptunium-237 contained in plutonium as part of the natural in-growth process are not required to be accounted for or reported until separated from the plutonium.

[3] Report as Pu-238 if the contained Pu-238 is 10 percent or greater of total plutonium by weight; otherwise, report as plutonium Pu 239-241.

[4] For deuterium in the form of heavy water, both the element and isotope weight fields should be used; otherwise, report isotope weight only.

[5] Tritium contained in water (H2O or D2O) used as a moderator in a nuclear reactor is not an accountable material.

[6] Uranium in cascades is treated as enriched uranium and should be reported as material type 89.

TSW for T-1043 Photoelectron Yield for Prototype Mu2e CRV Scintillation Counters

The following people have read this TSW:

9/3/2013

Michael Lindgren, Particle Physics Division, Fermilab

9/9/2013

Roger Dixon, Accelerator Division, Fermilab

9/6/2013

Robert Roser, Scientific Computing Division, Fermilab

9/6/2013

Martha Michels, ESH&Q Section, Fermilab

9/8/2013

Greg Bock, Associate Director for Research, Fermilab

9/11/2013

Stuart Henderson, Associate Director for Accelerators, Fermilab